JOHNSON Co. RCB CULVERT REPLACEMENT - TWIN BOX BRF-001-5(112)--38-52

LETTING DATE 10/15/2019

IOWA DOT

Highway Division

PLANS OF PROPOSED IMPROVEMENT ON THE

PRIMARY ROAD SYSTEM

JOHNSON COUNTY

RCB CULVERT REPLACEMENT - TWIN BOX

Stream 0.6 mi N of Co Rd F52

SCALES: As Noted

Refer to the Proposal Form for list of applicable specifications.

Value Engineering Saves. Refer to Article 1105.14 of the Specifications.

IOWA ONE CALL
1-800-292-8989
www.iowaonecall.com
811 Know what's below. Call before you dig.

REVISIONS

	TOTAL 17
PROJECT IDENTIFICATION NUMBER	
15-52-001-010-04	
PROJECT NUMBER	
BRF-001-5(112)--38-52	
R.O.W. PROJECT NUMBER	
NHSN-001-5(113)--2R-52	

INDEX OF SHEETS

No.	DESCRIPTION
A Sheets	**Title Sheets**
A.1	Title Sheet & Location Map
B Sheets	**Typical Cross Sections and Details**
B.1 - 4	Typical Cross Sections and Details
D Sheets	**Mainline Plan and Profile Sheets**
* D.1	Plan & Profile Legend & Symbol Information Sheet
* D.2 - 3	IA 1
G Sheets	**Survey Sheets**
G.1 - 3	Reference Ties and Bench Marks
J Sheets	**Traffic Control and Staging Sheets**
* J.1	Traffic Control Plan
W Sheets	**Mainline Cross Sections**
W.1 - 5	IA 1
	* Color Plan Sheets

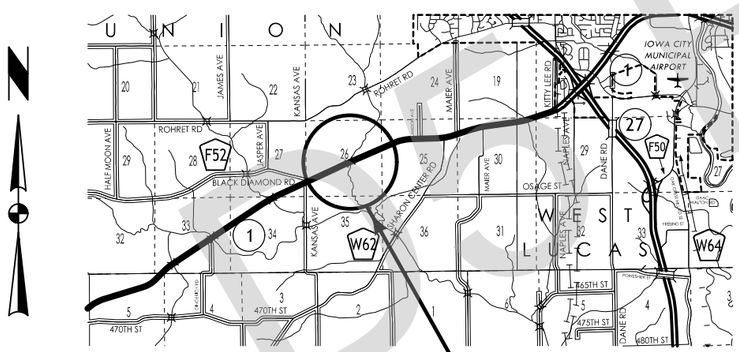

PROJECT LOCATION
Maint. No. 5280.0S001
FHWA No. 31700 (Existing)

CUT	(ML)	2,200 CY
FILL+30%	(ML)	12,500 CY
CONTRACTOR FURNISH		10,300 CY

DATES:
D4 PLAN – JUNE 18, 2019

Iowa Highway 1

DESIGN DATA RURAL

2018	AADT	7,100	V.P.D.
2038	AADT	8,200	V.P.D.
20--	DHV	--	V.P.H.
TRUCKS		7-8%	%
Total Design ESALs		--	

INDEX OF SEALS

SHEET NO.	NAME	TYPE
A.1	Kelly C. Bell	Primary Signature Block

PRELIMINARY PLANS

Subject to change by final design.

D5 Revised – March 29, 2018

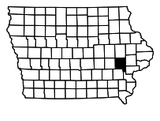

LOCATION MAP SCALE
0 1 2 3
Miles

DEPRECATED Revised 03-29-2018

G_2_Grade_BR
MODIFIED

Normal section shown may be modified appropriately in areas of superelevated curves or other locations specifically designated by the Engineer.

See Plan & Profile sheets and cross sections for additional details of ditches and backslopes.

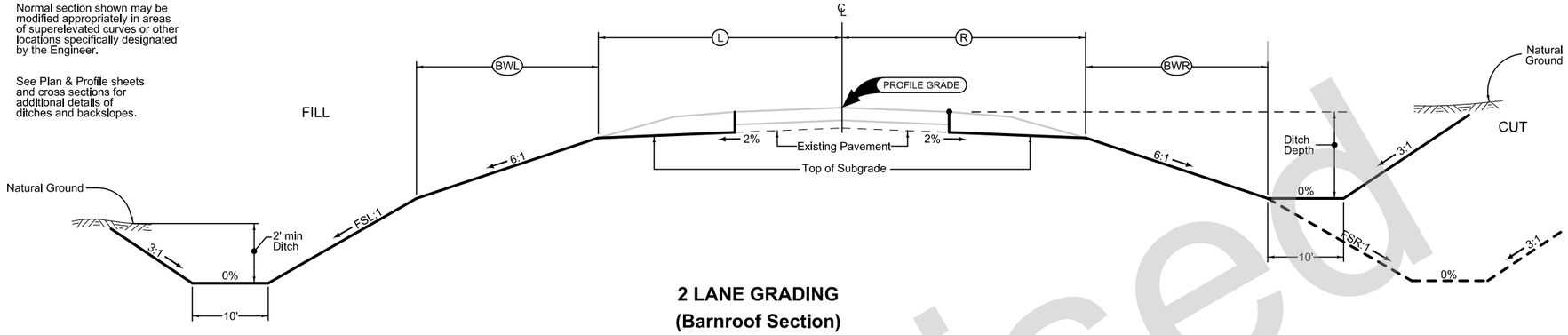

2 LANE GRADING
(Barnroof Section)

LOCATION			DIMENSIONS					
ROAD IDENTIFICATION	STATION TO STATION		L Feet	R Feet	BWL Feet	BWR Feet	FSL Feet	FSR Feet
Iowa Highway 1	659+90.00	660+40.00	----	28.45-27.16	----	0	----	3.5:1-3:1
Iowa Highway 1	660+40.00	660+87.66	----	27.16	----	0	----	3:1
Iowa Highway 1	660+87.66	661+14.80	----	27.16-31.47	----	0	----	3:1
Iowa Highway 1	661+14.80	661+20.00	----	31.47-32.01	----	0-0.86	----	3:1
Iowa Highway 1	661+20.00	661+61.55	----	32.01	----	0.86-12	----	3:1
Iowa Highway 1	661+61.55	662+73.11	----	32.01	----	12	----	3:1
Iowa Highway 1	662+73.11	663+17.98	----	32.01	----	12-0	----	3:1
Iowa Highway 1	663+17.98	663+40.28	----	32.01-28.60	----	0	----	3:1
Iowa Highway 1	663+40.28	664+70.00	----	28.60	----	0	----	3:1
Iowa Highway 1	659+90.00	660+50.00	29.10-28.60	----	0	----	3.5:1-3:1	----
Iowa Highway 1	660+50.00	661+55.68	28.60	----	0	----	3:1	----
Iowa Highway 1	661+55.68	661+76.50	28.60-31.58	----	0	----	3:1	----
Iowa Highway 1	661+76.50	661+80.00	31.58-32.01	----	0-0.50	----	3:1	----
Iowa Highway 1	661+80.00	662+22.86	32.01	----	0.50-12	----	3:1	----
Iowa Highway 1	662+22.86	663+17.93	32.01	----	12	----	3:1	----
Iowa Highway 1	663+17.93	663+60.00	32.01	----	12-0.75	----	3:1	----
Iowa Highway 1	663+60.00	663+64.65	32.01-31.50	----	0.75-0	----	3:1	----
Iowa Highway 1	663+64.65	663+81.43	31.50-29.16	----	0	----	3:1	----
Iowa Highway 1	663+81.43	664+20.00	29.16	----	0	----	3:1	----
Iowa Highway 1	664+20.00	664+70.00	29.16-29.86	----	0	----	3:1	----

D5 Revised 03-29-2018

Combination Shoulder

Shoulder Jointing:
Longitudinal joint: B

2_C_ 10-15-13			
STATION TO STATION		(P) Feet	(G) Feet
659+90.00	664+67.00	6	4

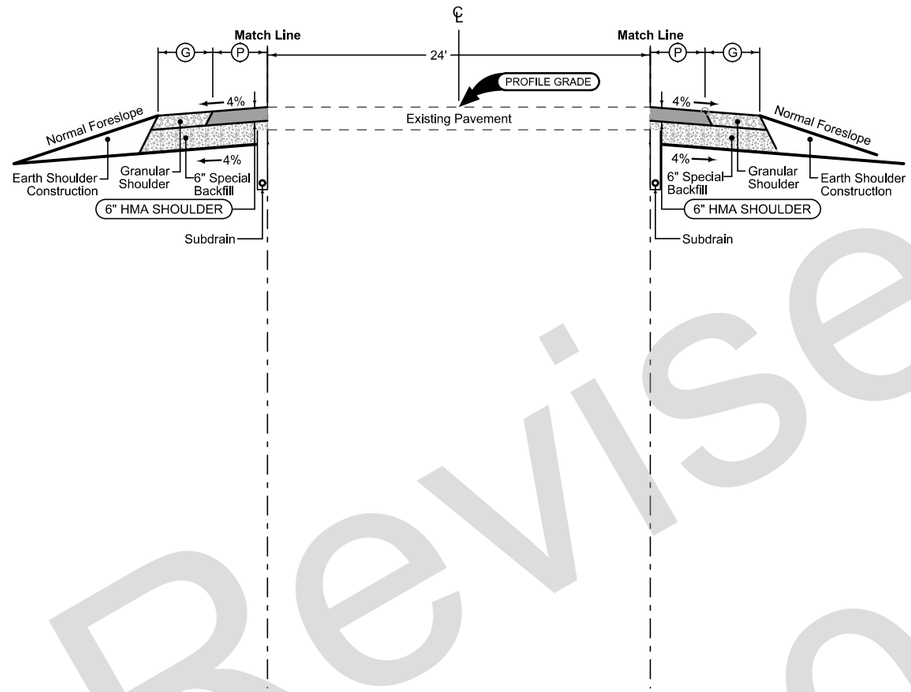

Combination Shoulder

Shoulder Jointing:
Longitudinal joint: B

2_C_ 10-15-13			
STATION TO STATION		(P) Feet	(G) Feet
659+90.00	660+87.60	6	4
660+87.60	660+95.00	6	4
660+95.00	664+67.00	6	4

D5 Revised
03-29-2018

See Tab 100-24 or 100-25 for pavement quantities.
See Tab 112-9 for shoulder quantities.

IOWA HIGHWAY 1

4312
04-18-17

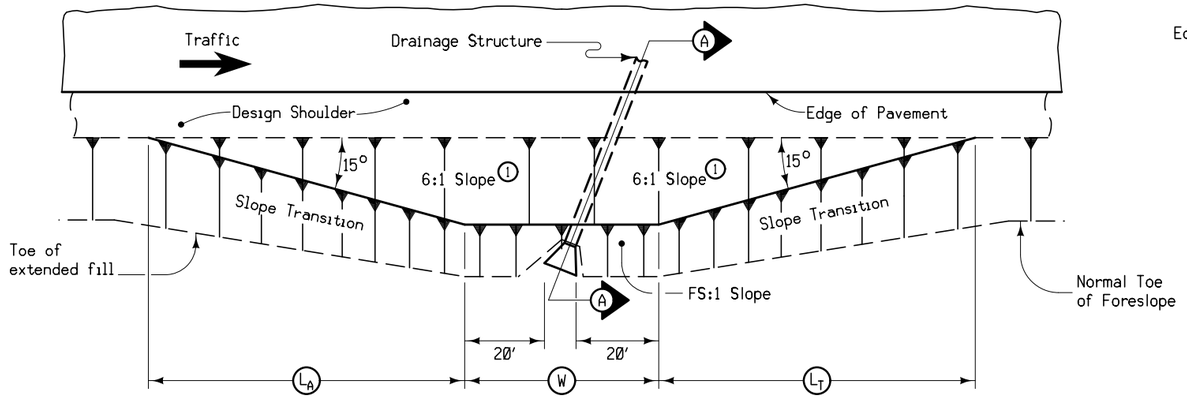

PLAN VIEW

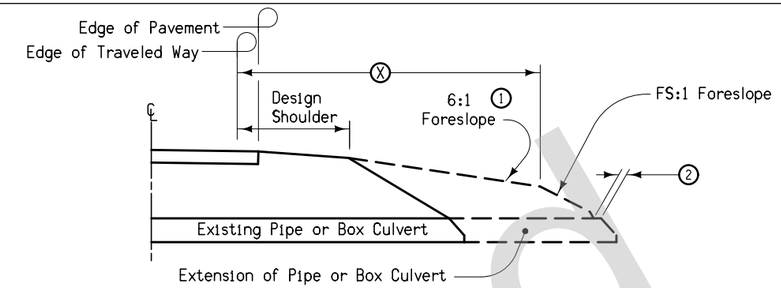

SECTION A-A

STRUCTURE LOCATION		W	L_A	L_T	X	FS
STATION 3	SIDE	Feet	Feet	Feet	Feet	
662+30.00	LT	95	63	67	32	3
662+30.00	RT	95	74	67	32	3

At locations where an extended or newly constructed drainage structure extends beyond the normal foreslope cover, flatten as indicated so as to cover the structre. Minimum earth cover is 6 inches.

1. Slope may be flatter than 6:1.
2. 6 inch minimum for pipe installations or to top of headwall on RCB.
3. At ℄ of road.

W = Pipe or RCB opening width plus 20 feet each side.

BARNROOF FORESLOPE AT SKEWED DRAINAGE STRUCTURE

D5 Revised 03-29-2018

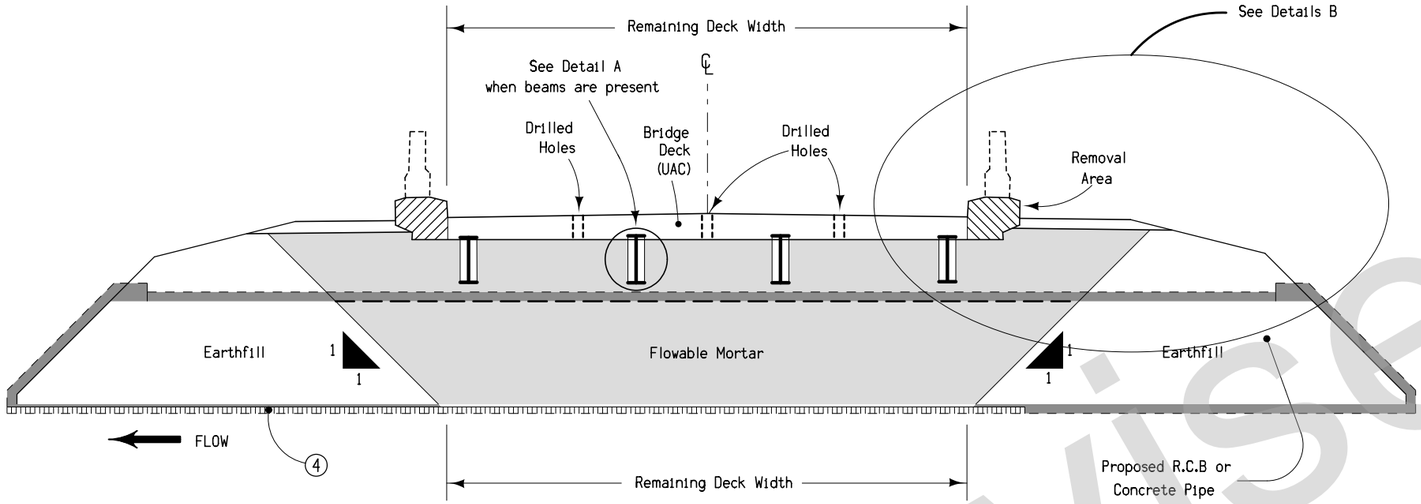

End View

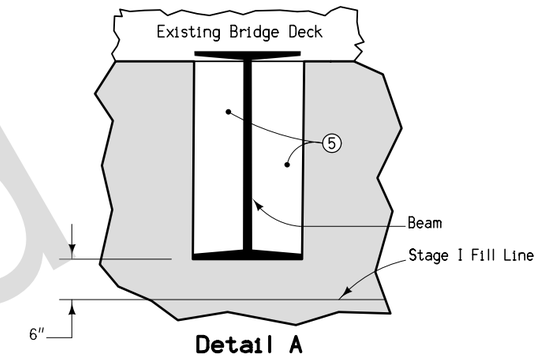

Detail A
Flange Filler Material Area
when beams are present

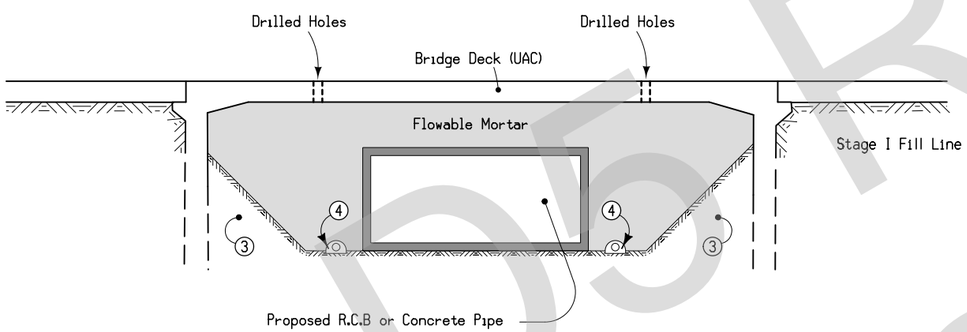

Section at Centerline

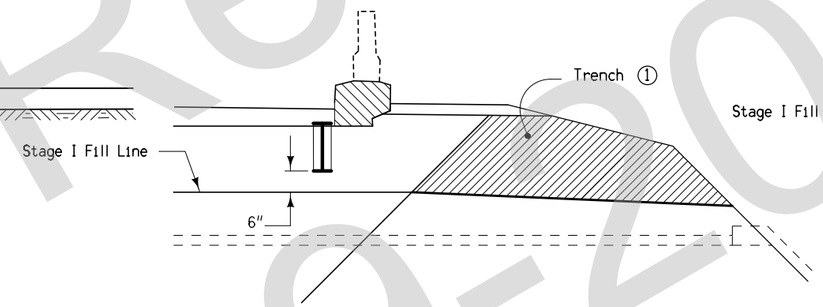

Detail B (Beam Bridge)

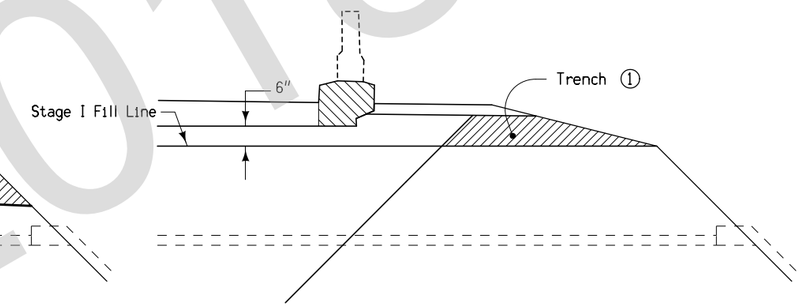

Detail B (Slab Bridge)

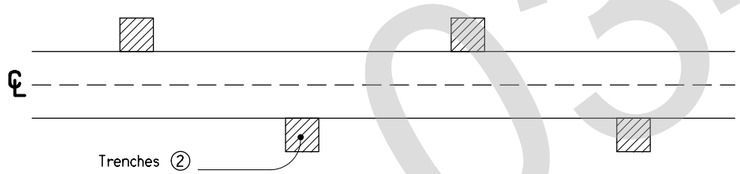

Trench Layout

1. Cut trenches in the soil plug to provide drainage for the flowable mortar. Backfill the trenches with open graded crushed stone, gravel, or recycled PCC to allow water to drain. Backfill material is incidental to flowable mortar.
2. Place trenches at 20' spacing with a minimum of two trenches on each side of the roadway.
3. Existing embankment.
4. 4" Subdrain with 4" cover of porous backfill at flowline elevation of culvert.
5. Place Flange Filler Material to fill pocket area between flanges to prevent flowable mortar from building up. Flange Filler Material is incidental to flowable mortar.

FILL FOR CULVERT USED
IN BRIDGE REPLACEMENTS
WITH RESTRICTED HEIGHT

DS Revised
03-29-2018

SURVEY SYMBOLS

- UB Utility Box
- D Centerline Draw or Stream (Down)
- Tile - TIL Tile Line
- OUT Tile Outlet
- SIGN SI Sign
- FW Wire Fence
- TDC Tree Deciduous
- Existing Guardrail

UTILITY LEGEND

- FO - (ICN) IOWA COMMUNICATIONS NETWORK
- FO2 - (KAT) KALONA COOPERATIVE TELEPHONE
- E - (ELP) EASTERN IOWA LIGHT & POWER

PLAN VIEW COLOR LEGEND OF PLAN AND PROFILE SHEETS

LINEWORK	Design Color No.	
Green	(2)	Existing Topographic Features and Labels
Blue	(1)	Proposed Alignment, Stationing, Tic Marks, and Alignment Annotation
Magenta	(5)	Existing Utilities
SHADING	**Design Color No.**	
Yellow	(4)	Highlight for Critical Notes or Features
Red	(3)	Delineates Restricted Areas
Lavender	(9)	Temporary Pavement Shading
Gray, Light	(48)	Proposed Pavement Shading
Gray, Med	(80)	Proposed Granular Shading
Gray, Dark	(112)	Proposed Grade and Pave Shading "In conjunction with a paving project"
Brown, Light	(236)	Grading Shading
Tan	(8)	Proposed Sidewalk Shading
Blue, Light	(230)	Proposed Sidewalk Landing Shading
Pink	(11)	Proposed Sidewalk Ramp Shading

PROFILE VIEW COLOR LEGEND OF PLAN AND PROFILE SHEETS

LINEWORK	Design Color No.	
Green	(2)	Existing Ground Line Profile
Blue	(1)	Proposed Profile and Annotation
Magenta	(5)	Existing Utilities
Blue, Light	(230)	Proposed Ditch Grades, Left
Black	(0)	Proposed Ditch Grades, Median
Rust	(14)	Proposed Ditch Grades, Right

- Reference Point
- Survey Line
- Station
- Section Corner
- Ground Line Intercept
- Saw Cut
- Guardrail
- Trench Drain
- HighTension Cable Guardrail
- Sheet Pile
- Pavement Removal
- Clearing & Grubbing Area

RIGHT-OF-WAY LEGEND

- Proposed Right-of-Way
- Existing Right of Way
- Existing and Proposed Right-of-Way
- Easement and Existing Right-of-Way
- Easement (Temporary)
- Easement
- C/A Access Control
- Property Line

PLAN AND PROFILE LEGEND AND SYMBOL INFORMATION SHEET

(COVERS SHEET SERIES D)

D5 Revised 03-29-2018

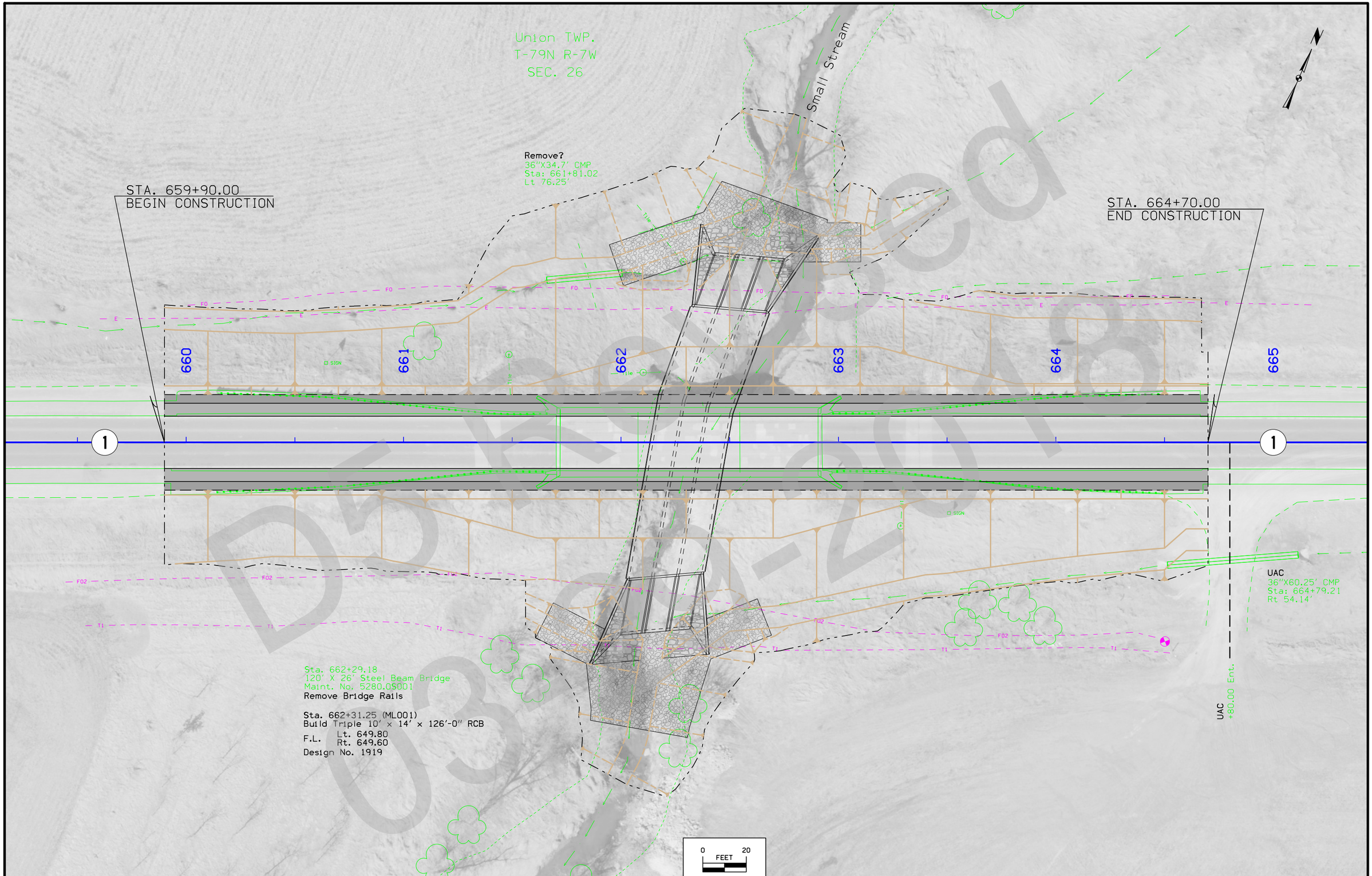

FILE NO.	ENGLISH	DESIGN TEAM Flattery \ Bell \ Kiebel	COUNTY	PROJECT NUMBER BRF-001-5(112)--38-52	SHEET NUMBER D.2

3:57:01 PM 3/28/2018 npaul pw:\\projectwise.dot.int.lan:PWMain\Documents\Projects\5200101015\Design\(112)_RCB Culvert Replacement - Twin Box\CADD_Files\Sheet_Files\52001112_D02.dgn

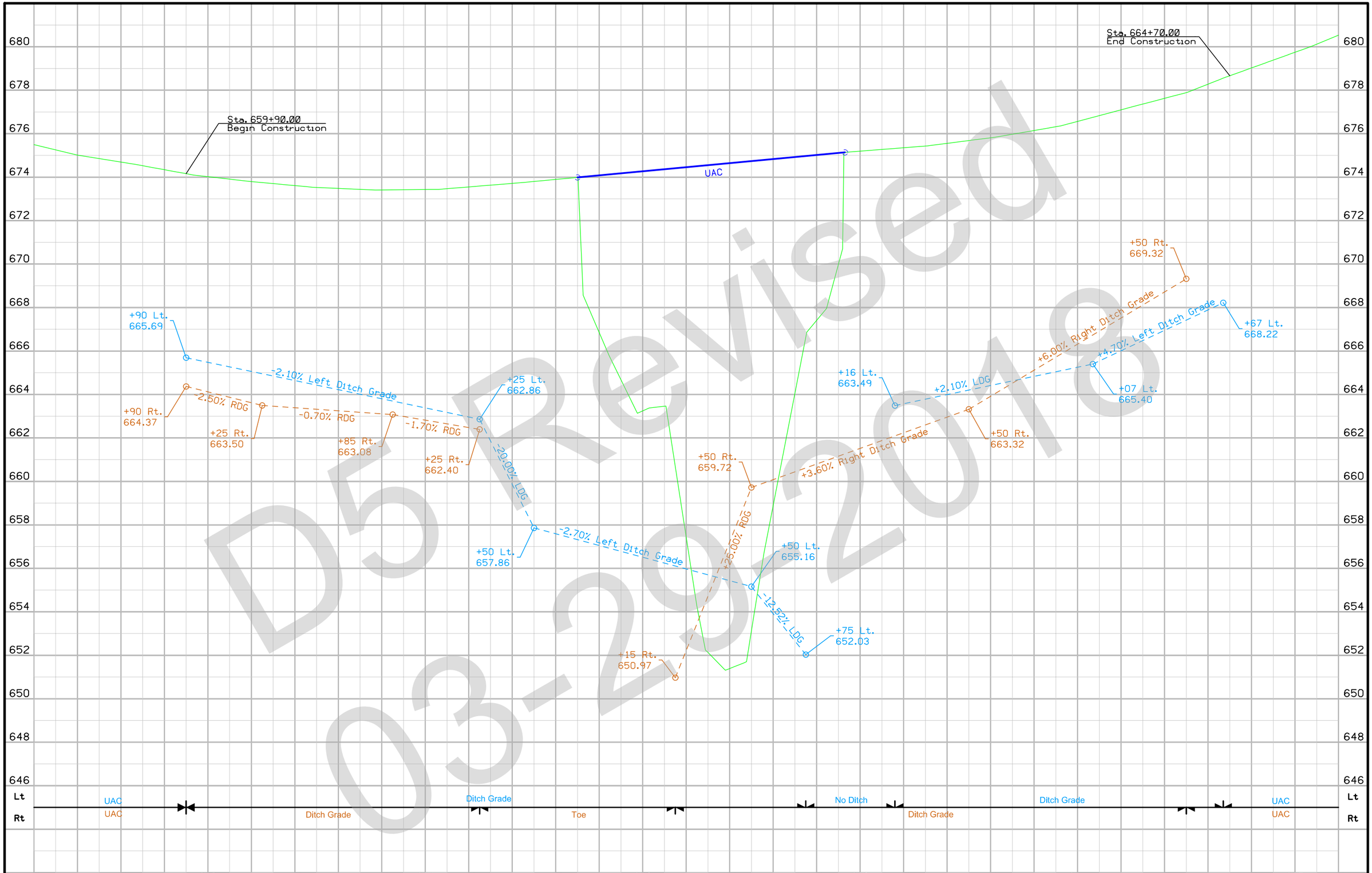

D5 Revised
03-29-2018

FILE NO.	ENGLISH	DESIGN TEAM Flattery \ Bell \ Kiebel	JOHNSON COUNTY	PROJECT NUMBER BRF-001-5(112)--38-52	SHEET NUMBER D.3

11:32:39 AM 1/24/2018 npaul pw:\\projectwise.dot.int.lan:PWMain\Documents\Projects\5200101015\Design\(112)_RCB Culvert Replacement - Twin Box\CADD_Files\Sheet_Files\52001112_D03.dgn

Survey Information

SAP 843.3
County: Johnson
PIN: 15-52-001-030
Project Number: BRF-001-5(112)--38-52
Location: Stream 0.6 mi N of Co Rd F52
Type of Work: RCB Culvert Replacement - Twin Box
Project Directory: 5200103015

General Information

Measurement units for this survey are US survey feet. This survey is for replacement of bridge with a twin reinforced concrete box culvert on existing profile. Project datum and control information is provided by Design Survey Office. This project is a Partial DTM with Photo control.

Vertical Control

Vertical datum for this survey is NAVD88 (Computed using Geoid12A). Benchmarks were placed throughout the project using post processed static observations relative to Pts. 1 and Johnson County Pt. 220. A minimum of 6hrs of data was simultaneously collected on each of these primary control points.

This survey observed 1 Johnson County Control Monument with published NAVD88 Geoid03 heights to compare to local ground control:
Point name 220 Elev. of 758.49'
Survey Elev. = 758.46'

Horizontal Control

The project coordinate system for this survey is Modified Iowa State Plane South Zone (U.S. Survey Feet). This survey control is relative to IaRTN reference stations. IaRTN Reference Station coordinates are relative to the National Reference Station network datum: NAD83 (2011) for Epoch 2010.00.

The project coordinate system is modified from Iowa State Plane South at project point 1 project coordinates of N= 591605.026, E= 2144428.984 (US ft.) All project points are scaled about this point using a scale factor of 1.000052919307.

Additional control points were placed throughout the project using post processed static observations relative to Pts. 1 and 2. A minimum of 6hrs of data was simultaneously collected on each point.

Alignment Information

The horizontal alignment for this survey is a retrace of As-built Plans No F-9(7) .Survey stationing was equated to the plan PC station 648+54.20 and run ahead without equation throughout the survey.

DSR Revised 03-29-2018

CONTROL POINT VICINITY MAP

This map is a guide to the vicinity of the primary project control points
Primary control is for use with RTK base stations and for RTN validation.
Future surveys will use primary project control to establish temporary control as needed for construction or other surveying applications.

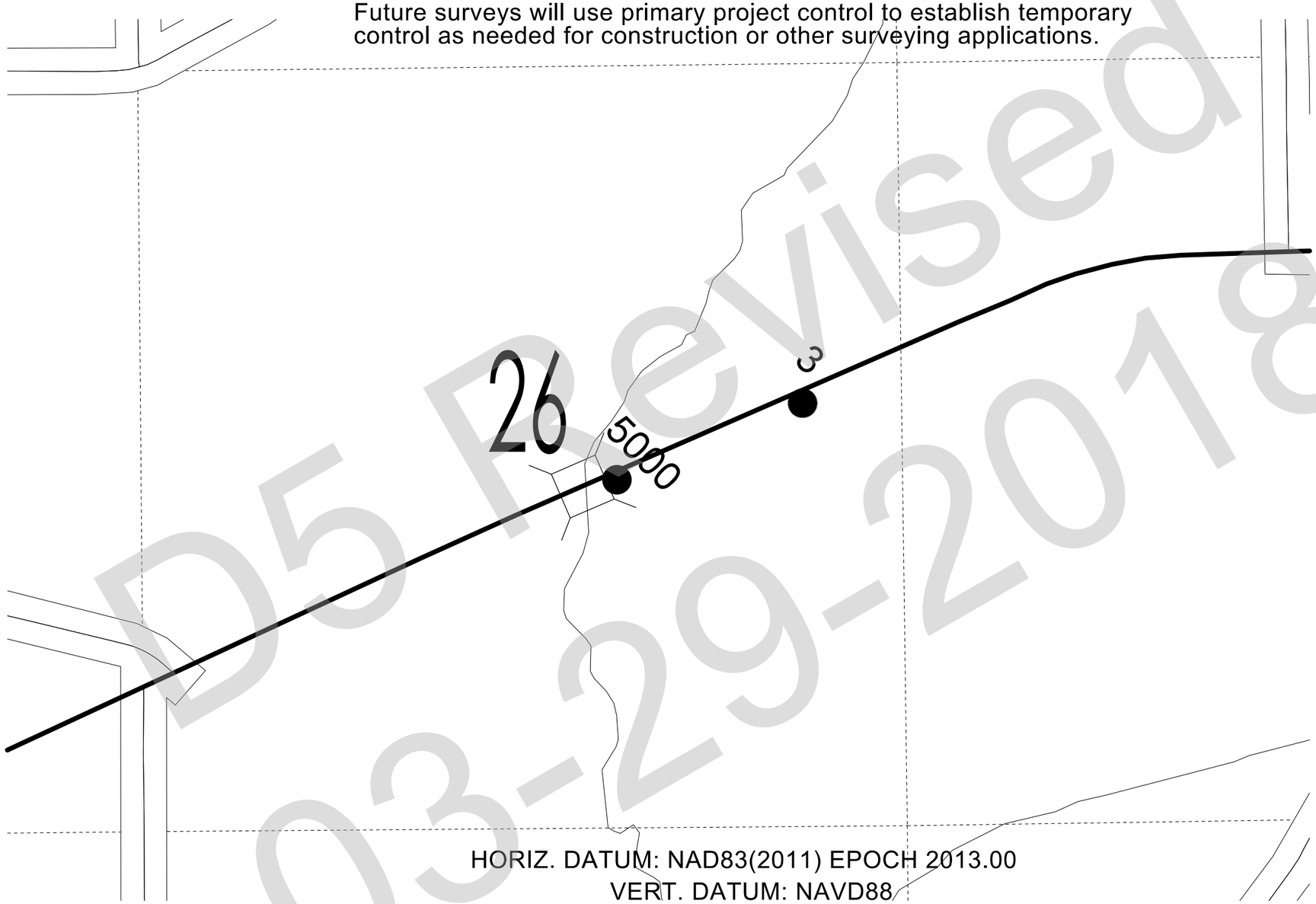

HORIZ. DATUM: NAD83(2011) EPOCH 2013.00
VERT. DATUM: NAVD88
State Plane South

Coordinate listing from next sheet will be used with IaRTN for monument recovery. No other reference ties are given.

D5 Revised
03-29-2018

HORIZONTAL AND VERTICAL PROJECT CONTROL COORDINATE LISTING

HORIZ. DATUM: NAD83(2011) EPOCH 2013.00

VERT. DATUM: NAVD88

State Plane South

Point	Name	Northing	Easting	Elevation	Feature Definition
3	596446.480	2153994.630		749.23	CP
5000	595917.257	2152711.037		674.45	CP

D5 Revised
03-29-2018

Johnson ROW: NHSN-001-5(113)--2R-52 PIN 15-52-001-010

Approx 2 mi S of Co Rd F52 to Approx 0.6 mi N of Co Rd F52

PARCEL NO.	OWNER NAME	STATE FEE	STATE EASE	COUNTY FEE	COUNTY EASE	CITY FEE	CITY EASE	EXCESS	TEMP EASE	BORROW FEE	BORROW T.E.	MITIGATION	OTHER	HOUSE	BUILDING(S)	A/C ONLY	TOTAL ACQ.
12	James F. Sueppel - Fee		0.03 AC														
13	Kevin W. Monson - Fee		0.21 AC														
14	Williams Woods Homeowners Accociation Inc. - Fee		0.11 AC														
15	Edward S. Ruppenkamp - Fee		0.24 AC														
4 Parcels	"TOTALS	0 AC	0.59 AC	0 AC	0 AC	0 AC	0 AC	0 AC	0 AC	0 AC	0 AC	0 AC					
		0 SF	0 SF	0 SF	0 SF	0 SF	0 SF	0 SF	0 SF								

13

KEVIN W.

MONSON

14

WILLIAMS WOODS

HOMEOWNERS ASSOCIATION INC.

662+15
℄185'

663+08±R
℄150'

663+90
℄120'

661+10
℄97'±Ex.R/W

Union TWP.
T-79N R-7W
SEC. 26

Remove?
36"X24.7' CMP
Sta: 661+81.02
Lt 76.25'

656 657 658 659 660 661 662 663 664 665 666 667 668

661+20
℄66'±Ex.R/W

Sta. 662+29.18
120' X 28' Steel Beam Bridge
Maint. No. 5200.08001
Remove Bridge Rails

Sta. 662+31.25 (4L001)
Build Triple 10' x 14' x 128'-0" RC
L.- 649.80
F.L. Rt. 649.80
Design No. 1919

661+34±R
℄125'

661+60
℄165'

662+30
℄180'

663+15
℄91'±Ex.R/W

UAC
36"X80.29' CMP
Sta: 664+79.21
Rt. 84.14'

UAC
48"X80' Ent.

12

JAMES F. & CARALEE A.

SUEPPEL

15

EDWARD S. & KATHERINE

RUPPENKAMP

0 50
FEET

Right of Way Design Information

THIS SHEET INCLUDED FOR INFORMATION ONLY

ROW Team: LARSON /GROAT
ROW #: NHSN-001-5(113)--2R-52
Plan Date: 05-02-18
Color Legend:
- Property Lines
- Temporary Easement
- Permanent Acquisition

FILE NO.	ENGLISH	DESIGN TEAM Flattery \ Bell \ Kiebel	JOHNSON COUNTY	PROJECT NUMBER BRF-001-5(112)--38-52	SHEET NUMBER H.1

4:51:03 PM 5/2/2018 untitled pw:\\projectwise.dot.int.lan:PWMain\Documents\Projects\5200101015\ROW\113\52001113_H1.dgn

108-23A
08-01-08

TRAFFIC CONTROL PLAN

1) Traffic shall be maintained on IA 1 at all times.

2) Traffic may be reduced to one lane using lane closures during work hours, with Standard Road Plan TC-213.

3) There shall be no shoulder drop off greater than 2" during non work hours.

108-25
10-21-14

511 TRAVEL RESTRICTIONS

Route	Direction	County	Location Description	Feature Crossed	Object Type	Maint. Bridge No., Structure ID, or FHWA No.	Type of Restriction	Existing Measurement	Construction Measurement	Construction Measurement as Signed	Projected As Built Measurement	Remarks
			No Travel Restrictions Expected									

111-01
04-17-12

COORDINATED OPERATIONS

Other work in progress during the same period of time will include the construction of the projects listed. Coordinate operations with those of other contractors working within the same area.

Project	Type of Work
BRF-001-5(104)--38-52	Bridge Replacement-PPCB
BRF-001-5(108)--38-54	RCB Culvert Replacement-Twin
BRF-001-5(110)--38-56	Bridge Replacement-PPCB
BRF-001-5(117)--38-58	RCB Culvert New - Triple Box

D5 Revised
03-29-2018

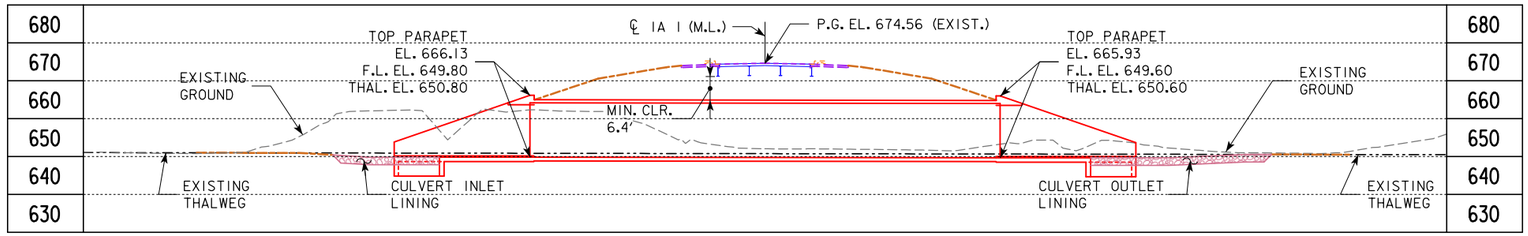

LONGITUDINAL SECTION ALONG ℄ CULVERT

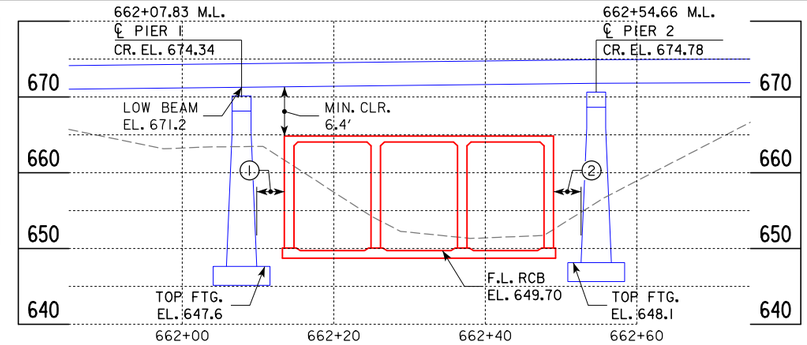

LONGITUDINAL SECTION ALONG ℄ ROADWAY

BENCH MARK:
BM NO. 3, CP
X=2,153,994.6 Y=596,446.5
IOWA STATE PLANE SOUTH, SURVEY FEET
ELEV. = 749.23 NAVD88/IARTN (GEOID12A)

+0.9350%

PVI STA 661+70.00
PVI EL. 673.99

PVI STA 662+93.00
PVI EL. 675.14

U.A.C. GRADE ON IA 1

0 ENGLISH 40
SCALE IN FEET

N

10' 24' 10'
LANES
VAR. 4% 2% 1 2% 4% VAR.
DESIGN APPROACH SECTION

(1) MIN. CLR. 1.9' EDGE S.W. COLUMN PIER 1 TO RCB WALL

(2) MIN. CLR. 1.9' EDGE N.E. COLUMN PIER 2 TO RCB WALL

(3) STD. HEADWALL TRH 15-X-12 MODIFIED TO H=14'-0. PLAN DIMENSIONS FOR 10' X 12' HEADWALL USED. WALL HEIGHT INCREASED BY 2'-0 FROM STD.

CULVERT INLET LINING
CL. E REVETMENT
SEE DES. SHT. 2

SMALL STREAM

19'-10
26'-7
3:1
6:1
46'-0
18'-0
126'-0 BK. TO BK. OF PARAPET
62'-0
26'-7
19'-10
663+00
℄ RCB
CHANNEL INLET GRADING
MAX. FILL
TR 10X12 HDWL.
15° SKEW
MODIFIED
PI ℄ RCB
662+34.38 M.L.,
17.73' LT
Δ=10°
SKEW 20° L.A.
MIN. COVER
ROCK FLUME, TYP. 4 LOCS.
CL. E REVETMENT
SEE DES. SHT. 2
EXISTING BRIDGE
120'-0 X 26'-0 I-BEAM
DESIGN NO. 1648
PROPOSED RCB
℄ 662+31.25 M.L.
TR 10' X 14' X 126'-0
10° SKEW L.A.
EXIST. 36" CMP
CULVERT OUTLET LINING
CL. E REVETMENT
SEE DES. SHT. 2
CHANNEL OUTLET GRADING
TR 10X12 HDWL.
15° SKEW
MODIFIED
℄ IA 1 (M.L.)
661+00
Tile
E1
F0
F02
T1
SIGN

SITUATION PLAN

HYDRAULIC DATA

DRAINAGE AREA = 5.8 SQ. MI.
STREAM SLOPE = 7.39 FT./MI. (D/S)

Q_{50} = 3,000 CFS
HW ELEV. = 666.5
EXIT VELOCITY = 7.0 FPS

Q_{100} = 3,580 CFS
HW ELEV. = 667.5
EXIT VELOCITY = 8.4 FPS
BACKWATER = 1.5 FT.

LOCATION

IA 1 OVER SMALL STREAM
T 79 N R 7 W
SECTION 26
UNION TOWNSHIP
JOHNSON COUNTY
BRIDGE MAINT. NO. 5280.0S001
FHWA NO. 31701
STA. 662+31.25 ℄ M.L.
LATITUDE 41.620352°
LONGITUDE -91.627081°

UTILITIES LEGEND

F0 - FIBER OPTIC IOWA COMMUNICATIONS NETWORK
F02 - FIBER OPTIC KALONA COOPERATIVE TELEPHONE
E1 - EASTERN IOWA LIGHT AND POWER
T1 - SHARON TELEPHONE COMPANY

CULVERT FILL/COVER:

(A) MAX. FILL, 662+49.0 M.L., ℄
TOP RCB>PAVT. SURF. = 9.9'

(B) MIN. COVER, 662+15.6 M.L., 12.0' LT.
TOP RCB>PAVT. SURF. = 9.3'

TRAFFIC ESTIMATE

2018 AADT 7,100 V.P.D.
2038 AADT 8,200 V.P.D.
2039 DHV -- V.P.H.
TRUCKS 8%
TOTAL DESIGN ESALs --

PRELIMINARY

DESIGN FOR 10° SKEW (L.A.)

TRIPLE 10' X 14' X 126'-0 REINFORCED CONCRETE BOX CULVERT

SITUATION PLAN

STATION: 662+31.25 IA 1 (M.L.) OCT. 2019

JOHNSON COUNTY

IOWA DEPARTMENT OF TRANSPORTATION - HIGHWAY DIVISION

DESIGN SHEET NO. 1 OF 3 FILE NO. 31509 DESIGN NO. 1919

DESIGN TEAM | JOHNSON COUNTY | PROJECT NUMBER BRF-001-5(112)--38-52 | SHEET NUMBER

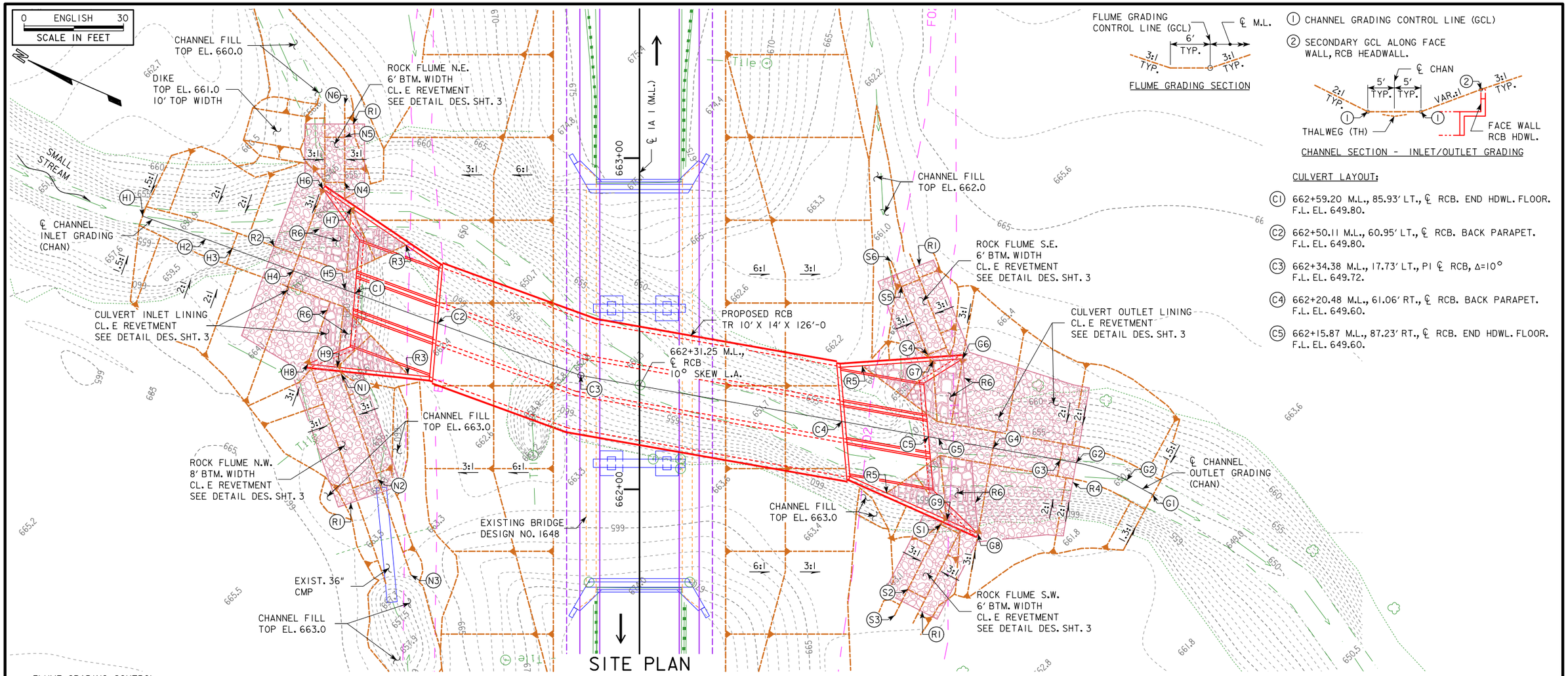

FLUME GRADING SECTION

① CHANNEL GRADING CONTROL LINE (GCL)

② SECONDARY GCL ALONG FACE WALL, RCB HEADWALL.

CHANNEL SECTION - INLET/OUTLET GRADING

CULVERT LAYOUT:

(C1) 662+59.20 M.L., 85.93' LT., ℄ RCB. END HDWL. FLOOR. F.L. EL. 649.80.

(C2) 662+50.11 M.L., 60.95' LT., ℄ RCB. BACK PARAPET. F.L. EL. 649.80.

(C3) 662+34.38 M.L., 17.73' LT., PI ℄ RCB, Δ=10° F.L. EL. 649.72.

(C4) 662+20.48 M.L., 61.06' RT., ℄ RCB. BACK PARAPET. F.L. EL. 649.60.

(C5) 662+15.87 M.L., 87.23' RT., ℄ RCB. END HDWL. FLOOR. F.L. EL. 649.60.

FLUME GRADING CONTROL:

(N1) 662+34.7 M.L., 90.0' LT., FLUME GCL, EL. 657.3. BTM. 12.5% SLOPE. 8' BTM. W. TOP WALL EL. 657.3.

(N2) 662+03.0 M.L., 79.0' LT., FLUME GCL, EL. 661.5. TOP 12.5% SLOPE. 8' BTM. W.

(N3) 661+74.2 M.L., 69.0' LT., FLUME GCL, EL. 663.0

(N4) 662+92.7 M.L., 89.0' LT., FLUME GCL, EL. 657.3. BTM. 12.5% SLOPE. TOP WALL EL. 655.9.

(N5) 663+06.3 M.L., 89.0' LT., FLUME GCL, EL. 659.0. TOP 12.5% SLOPE.

(N6) 663+16.3 M.L., 89.0' LT., FLUME GCL, EL. 659.2

(S1) 661+89.4 M.L., 91.0' RT., FLUME GCL, EL. 657.1. BTM. 20% SLOPE. TOP WALL EL. 657.1.

(S2) 661+69.8 M.L., 81.0' RT., FLUME GCL, EL. 661.5. TOP 20% SLOPE.

(S3) 661+61.9 M.L., 77.0' RT., FLUME GCL, EL. 661.7

(S4) 662+40.7 M.L., 87.0' RT., FLUME GCL, EL. 657.1. BTM. 20% SLOPE. TOP WALL EL. 657.1.

(S5) 662+61.2 M.L., 79.0' RT., FLUME GCL, EL. 661.5. TOP 20% SLOPE.

(S6) 662+68.9 M.L., 76.0' RT., FLUME GCL, EL. 661.7.

CHANNEL GRADING CONTROL:

(G1) 661+98.3 M.L., 155.0' RT., ℄ CHAN. BEGIN CHANNEL GRADING. BEGIN SIDE SLOPE TRANS., 1.5:1 SLOPE E., 1.3:1 SLOPE W. GCL EL. 651.46, TH EL. 650.46.

(G2) 662+02.7 M.L., 147.0' RT. ℄ CHAN. BEGIN 50' R. CURVE. 662+08.0 M.L., 131.8' RT. ℄ CHAN. END 50' R. CURVE. END SIDE SL. TRANS., 2:1 SLOPE. GCL/TH EL. 650.49.

(G3) 662+08.9 M.L., 127.0' RT., ℄ CHAN. BEGIN SIDE SLOPE TRANS., 2:1 SLOPE. GCL EL. 650.50.

(G4) 662+12.4 M.L., 106.7' RT., ℄ CHAN. GCL EL. 649.60.

(G5) 662+15.3 M.L., 90.3' RT., ℄ CHAN. END GRADING 3' RT. EDGE HDWL.FLOOR. GCL EL. 649.60.

(G6) 662+39.4 M.L., 97.6' RT., END WALL. END SIDE SLOPE TRANS., 3:1 SLOPE. GCL FACE/WALL. GCL EL. 656.6, TOP/WALL EL. 653.6.

(G7) 662+38.8 M.L., 88.6' RT., GCL FACE/WALL. GCL EL. 656.6, TOP/WALL EL. 656.6.

(G8) 661+86.6 M.L., 102.2' RT., END WALL. END SIDE SLOPE TRANS., 3:1 SLOPE. GCL FACE/WALL. GCL EL. 656.6, TOP/WALL EL. 653.6.

(G9) 661+90.8 M.L., 92.8' RT., GCL FACE/WALL. GCL EL. 656.6, TOP/WALL EL. 656.6.

(H1) 662+82.5 M.L., 150.0' LT., ℄ CHAN. BEGIN CHANNEL GRADING. BEGIN BTM. WIDTH TRANS., BTM. WIDTH 6'. BEGIN SIDE SLOPE TRANS., 1.5:1 SLOPE. GCL EL. 651.43, TH EL. 650.93.

(H2) 662+75.6 M.L., 131.0' LT., ℄ CHAN. END BTM. WIDTH TRANS., BTM. WIDTH 10'. END SIDE SLOPE TRANS., 2:1 SLOPE. GCL/TH EL. 650.90.

(H3) 662+72.7 M.L., 123.0' LT., ℄ CHAN. BEGIN SIDE SLOPE TRANS., 2:1 SLOPE. GCL EL. 650.89.

(H4) 662+66.0 M.L., 104.5' LT., ℄ CHAN. GCL EL. 649.80.

(H5) 662+60.3 M.L., 88.8' LT., ℄ CHAN. END GRADING 3' LT. EDGE HDWL. FLOOR. GCL EL. 649.80.

(H6) 662+90.7 M.L., 95.6' LT., END WALL. END SIDE SLOPE TRANS., 3:1 SLOPE. GCL FACE/WALL. GCL EL. 656.8, TOP/WALL EL. 653.8.

(H7) 662+84.9 M.L., 87.0' LT., GCL FACE/WALL. GCL EL. 656.8, TOP/WALL EL. 656.8.

(H8) 662+37.8 M.L., 100.2' LT., END WALL. END SIDE SLOPE TRANS., 3:1 SLOPE. GCL FACE/WALL. GCL EL. 656.8, TOP/WALL EL. 653.8.

(H9) 662+36.9 M.L., 91.2' LT., GCL FACE/WALL. GCL EL. 656.8, TOP/WALL EL. 656.8.

REVETMENT LAYOUT:

(R1) BEGIN FLUME REVETMENT 4' BACK OF FLUME TOP SLOPE, TYP. ALL FLUME LOCATIONS.

(R2) ℄ CHAN, 112.0' LT. M.L., BEGIN CULVERT INLET LINING

(R3) END CULVERT INLET LINING AT FACE WALL, RCB HDWL. W. WALL 662+34.6 M.L., 69.9' LT. E. WALL 662+73.7 M.L., 70.5' LT.

(R4) ℄ CHAN, 131.8' RT. M.L., BEGIN CULVERT OUTLET LINING

(R5) END CULVERT OUTLET LINING AT FACE WALL, RCB HDWL. W. WALL 661+98.9 M.L., 74.6' RT. E. WALL 662+37.3 M.L., 67.2' RT.

(R6) CONCRETE GROUT FOR REVETMENT FACING, REVETMENT SIDE SLOPES WITHIN LIMITS OF RCB HEADWALL.

PRELIMINARY

DESIGN FOR 10° SKEW (L.A.)

TRIPLE 10' X 14' X 126'-0 REINFORCED CONCRETE BOX CULVERT

SITUATION PLAN - SITE

STATION: 662+31.25 IA I (M.L.) OCT. 2019

JOHNSON COUNTY

IOWA DEPARTMENT OF TRANSPORTATION - HIGHWAY DIVISION

DESIGN SHEET NO. 2 OF 3 FILE NO. 31509 DESIGN NO. 1919

DESIGN TEAM	JOHNSON COUNTY	PROJECT NUMBER BRF-001-5(112)--38-52	SHEET NUMBER

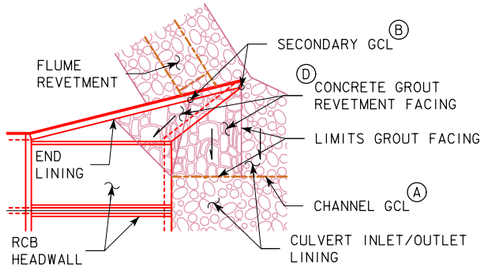

LINING PLAN ADJACENT TO HEADWALL

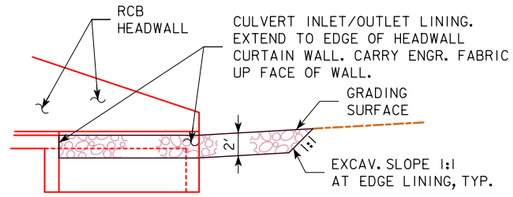

LINING SECTION ALONG CHANNEL INVERT

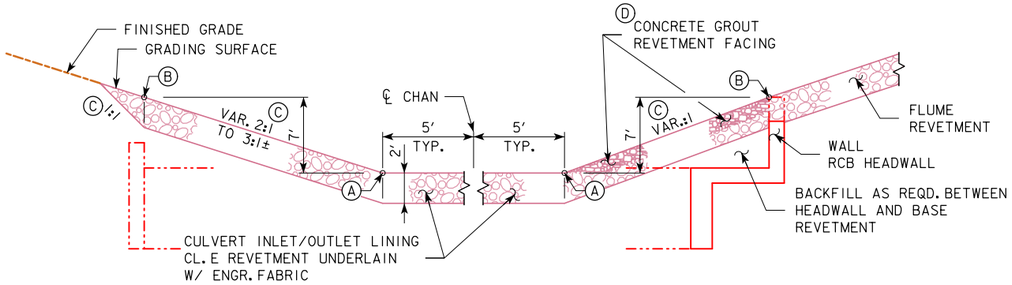

LINING ADJACENT TO HEADWALL

LINING WITHIN HEADWALL LIMITS

SECTION THROUGH CULVERT INLET/OUTLET LINING

(A) CHANNEL GRADING CONTROL LINE (GCL).

(B) SECONDARY GCL ALONG FACE WALL, RCB HEADWALL.

(C) SLOPE NORMAL TO CHANNEL GCL.

(D) CONCRETE GROUT FOR REVETMENT FACING. THE PURPOSE OF THE GROUT IS TO FILL SURFACE VOIDS TO MINIMIZE SUBSTRATE FOR VEGETATIVE GROWTH. APPLY TO REVETMENT SIDE AND END SLOPES WITHIN LIMITS OF RCB HEADWALL AS SHOWN.

GROUT PENETRATION TO 2/3 OF THE ROCK BLANKET DEPTH IS REQUIRED. FINISH THE GROUT SO THAT FACE STONES ARE LEFT EXPOSED FOR NO MORE THAN 3 IN.

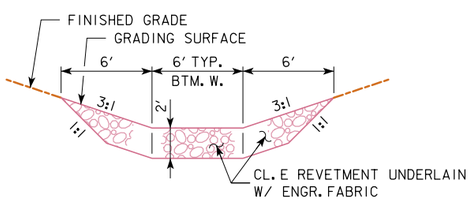

SECTION THROUGH ROCK FLUME

ESTIMATED REVETMENT QUANTITIES

REVETMENT TYPE - LOCATION	REVETMENT CL. E (TON)	CONCRETE GROUT (CY)	ENGINEERING FABRIC (SY)	EXCAVATION (CY)	
CULVERT OUTLET LINING - SOUTH	289.9	17.6	312.9	181.2	
CULVERT INLET LINING - NORTH	193.1	17.6	203.2	120.7	
ROCK FLUMES - SOUTH	101.8	-	132.2	63.6	
ROCK FLUMES - NORTH	123.2	-	156.6	77.0	
TOTALS	708.0	35.2	804.9	442.5	

EXCAVATION QUANTITY CALCULATED FROM GRADING SURFACE.
REVETMENT ESTIMATED AT 1.6 TON/CY
CONCRETE GROUT FOR REVETMENT ESTIMATED AT 0.20 CY/SY.

PRELIMINARY

DESIGN FOR 10° SKEW (L.A.)

TRIPLE 10' X 14' X 126'-0 REINFORCED CONCRETE BOX CULVERT

SITUATION PLAN - MISCELLANEOUS

STATION: 662+31.25 IA 1 (M.L.) OCT. 2019

JOHNSON COUNTY

IOWA DEPARTMENT OF TRANSPORTATION - HIGHWAY DIVISION

DESIGN SHEET NO. 3 OF 3 FILE NO. 31509 DESIGN NO. 1919

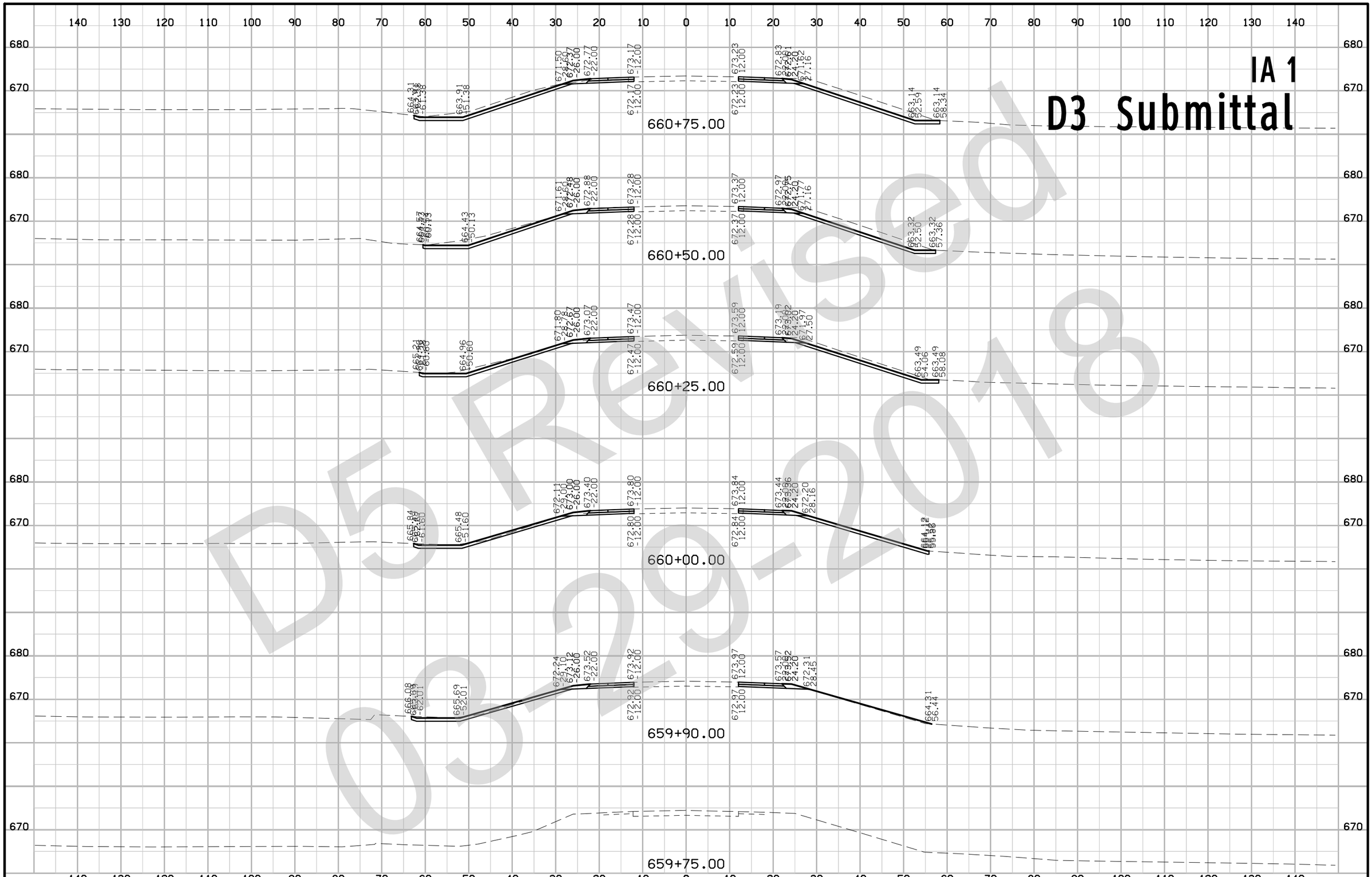

FILE NO.	ENGLISH	DESIGN TEAM Flattery \ Bell \ Kiebel	JOHNSON COUNTY	PROJECT NUMBER BRF-001-5(112)--38-52	SHEET NUMBER W.1

11:33:11 AM 1/24/2018 npaul pw:\\projectwise.dot.int.lan:PWMain\Documents\Projects\5200101015\Design\(112)_RCB Culvert Replacement - Twin Box\CADD_Files\Sheet_Files\52001112_W01.dgn

IA 1

D5 Submittal

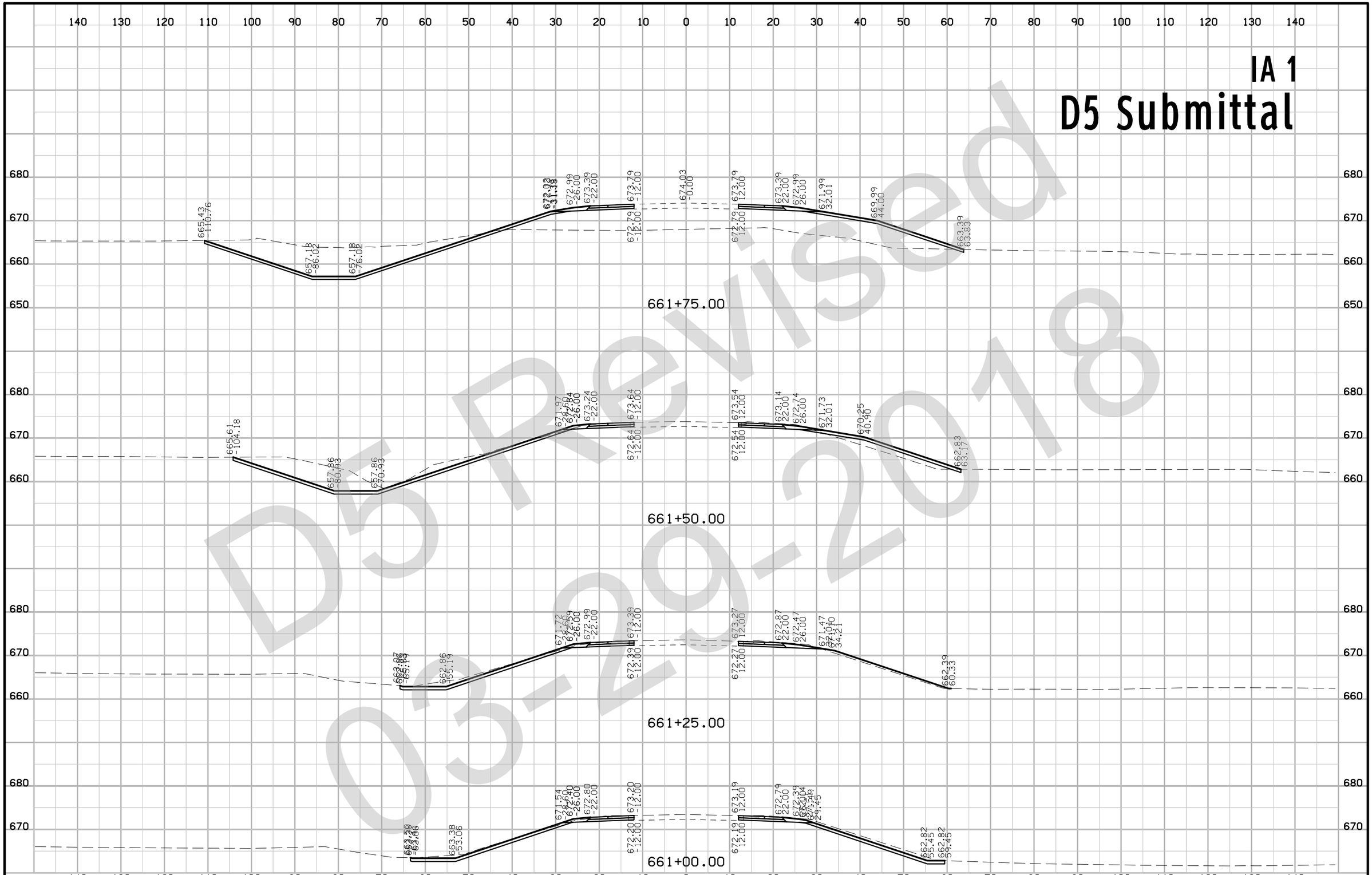

D5 Revised 03-29-2018

FILE NO.	ENGLISH	DESIGN TEAM Flattery \ Bell \ Kiebel	COUNTY	PROJECT NUMBER BRF-001-5(112)--38-52	SHEET NUMBER W.2

11:33:11 AM 1/24/2018 npaul pw:\\projectwise.dot.int.lan:PWMain\Documents\Projects\5200101015\Design\(112)_RCB Culvert Replacement - Twin Box\CADD_Files\Sheet_Files\52001112_W01.dgn

IA 1
D5 Submittal

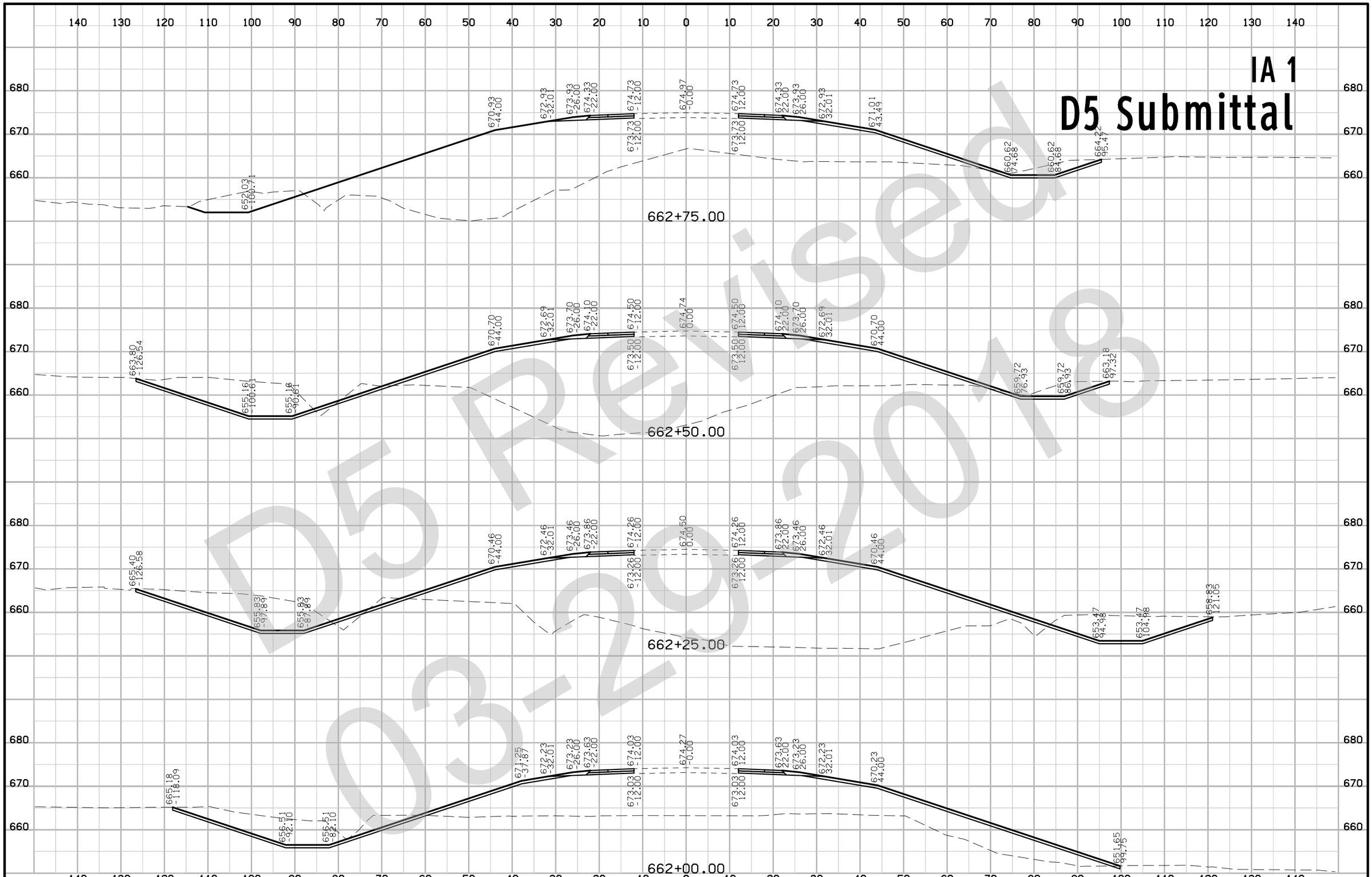

D5 Revised 03-29-2018

FILE NO.	ENGLISH	DESIGN TEAM Flattery \ Bell \ Kiebel	COUNTY	PROJECT NUMBER BRF-001-5(112)--38-52	SHEET NUMBER W.3

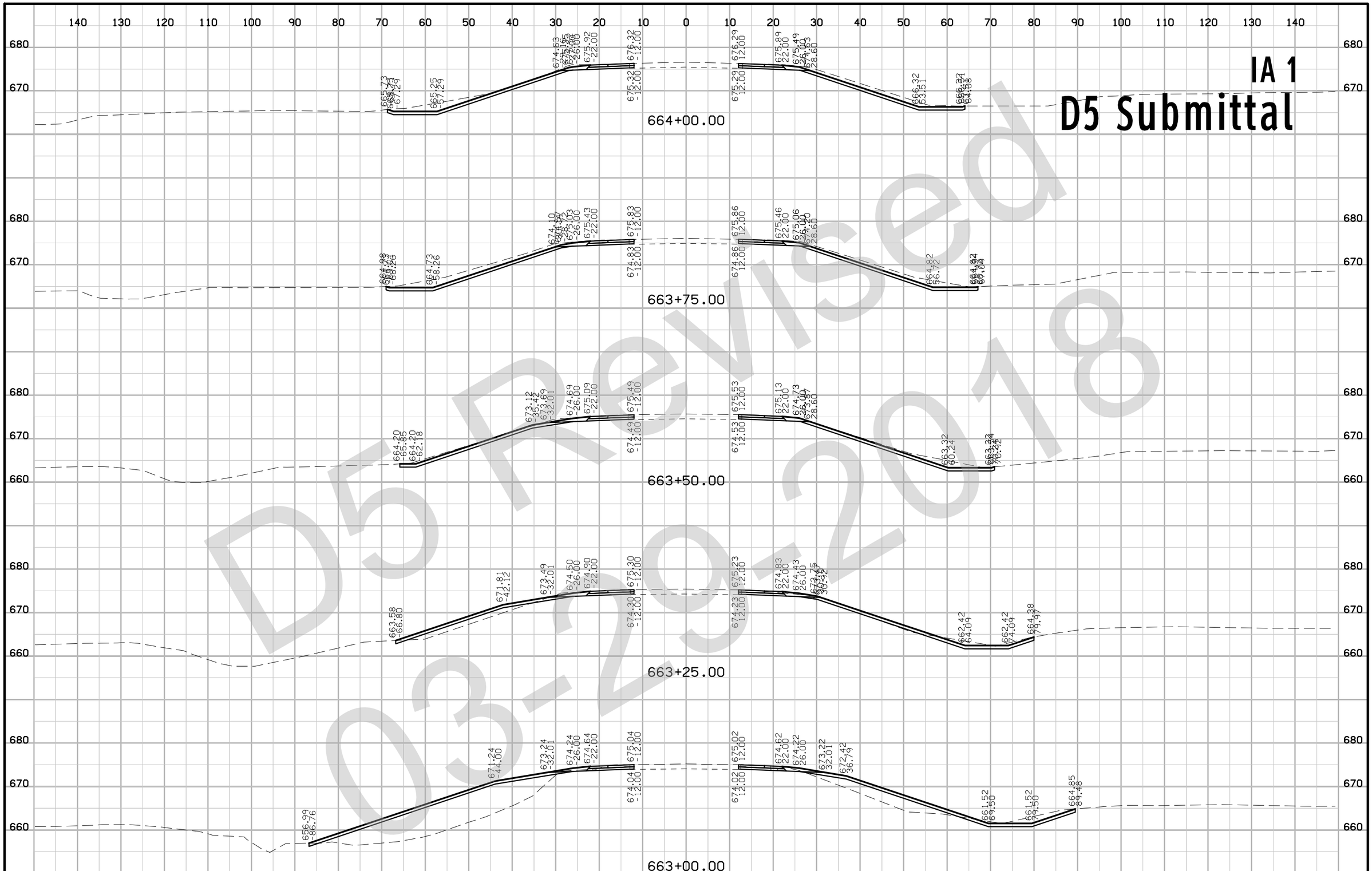

FILE NO.	ENGLISH	DESIGN TEAM Flattery \ Bell \ Kiebel	COUNTY	PROJECT NUMBER BRF-001-5(112)--38-52	SHEET NUMBER W.4

11:33:13 AM 1/24/2018 npaul pw:\\projectwise.dot.int.lan:PWMain\Documents\Projects\5200101015\Design\(112)_RCB Culvert Replacement - Twin Box\CADD_Files\Sheet_Files\52001112_W01.dgn

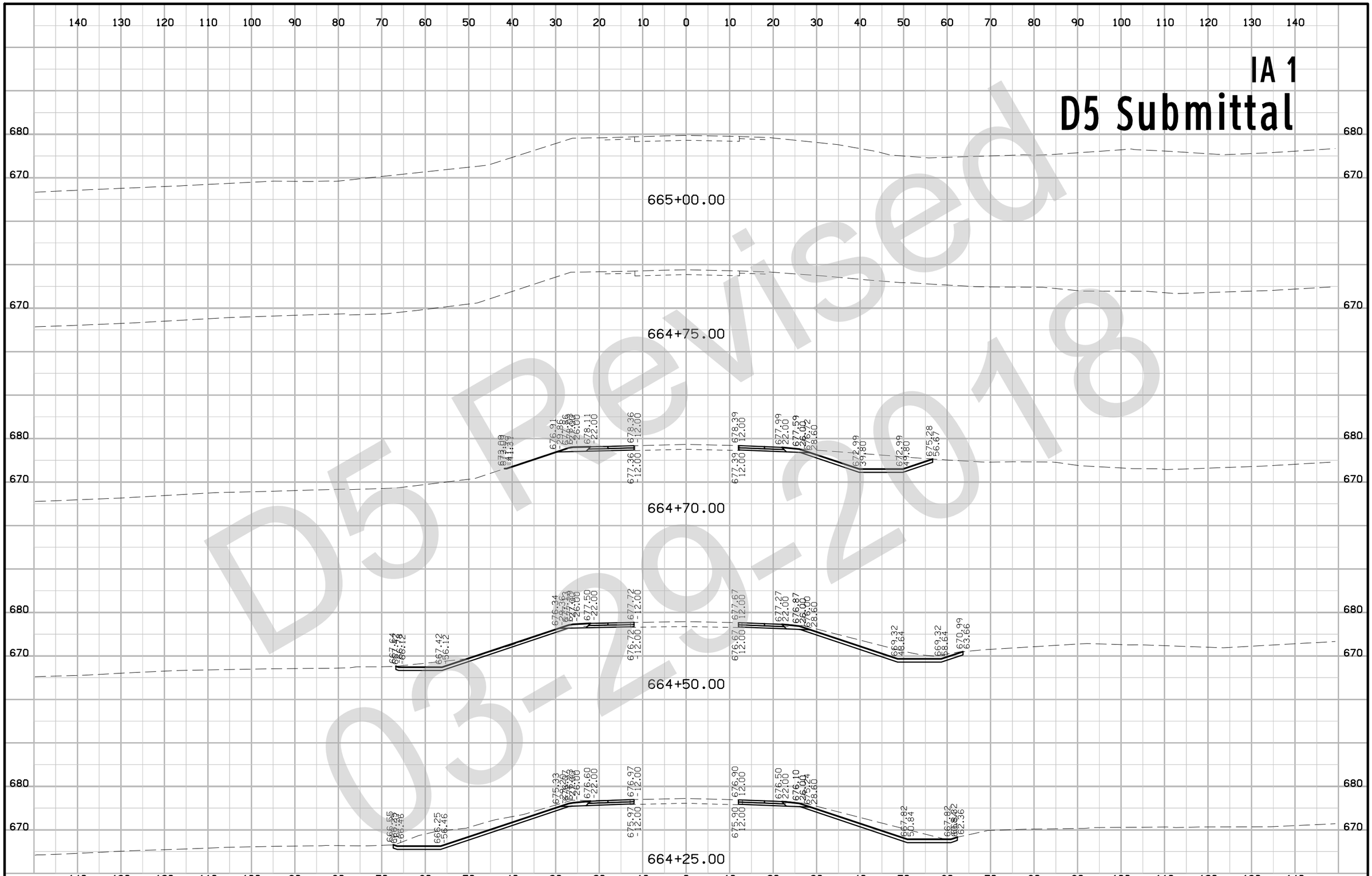

FILE NO.	ENGLISH	DESIGN TEAM	Flattery \ Bell \ Kiebel	COUNTY	PROJECT NUMBER	BRF-001-5(112)--38-52	SHEET NUMBER	W.5

11:33:13 AM 1/24/2018 npaul pw:\\projectwise.dot.int.lan:PWMain\Documents\Projects\5200101015\Design\(112)_RCB Culvert Replacement - Twin Box\CADD_Files\Sheet_Files\52001112_W01.dgn