Project 200 Utility considerations Based on 494 sheet plans entitled:

Design 3408 Mainline I-74 EB Levee to W Abutment (P32)

Sheet 5 – Design Sheet 4 of 282 (Sheet 5 of 494 in ".pdf") "Situation Plan - Unit 1" Utilities, EB Pier Plan, and Existing Structure baselines and footing locations.

Sheet 6 - 10 continuation through Unit 4 (0ver Mississippi Blvd.).

Sheet 12 – Design Sheet 11 of 282 – General Removal Plan & Depths.

SPS.1 – SPS.6 (Sheet 284-289 of 494 ".pdf") of Generalized Subsurface geotechnical & topographic data.

Design 3608 (US 67 Ramp C)

Sheet 286 – Design Sheet 3 of 64 "Situation Plan" Utilities, EB Pier Plan, and Existing Structure baselines and footing locations.

SPS.7 (Sheet 354 of 494 of ".pdf") Generalized Subsurface geotechnical & topographic data.

Design 3808 (US 67 Ramp A over Mississippi Blvd.)

Sheet 350 (Sheet 357 of 494 in ".pdf") – Design Sheet 3 of 42 "Situation Plan" Utilities, EB Pier Plan, and Existing Structure baselines and Abutment locations.

SPS.8 (Sheet 397 of 494 of ".pdf") Generalized Subsurface geotechnical & topographic data.

G.20 (Sheet 425 of 494 of ".pdf") Alignments Noise Walls

G.21-23 - Miscellaneous Alignment coordinates

N.3-4 (Sheet 433-434 of 494 of ".pdf") ITS Plan

P.10 (Sheet 458 of 494 of ".pdf") Arch Power Feed Plan (underground installation)

BRIDGE NEW - STEEL GIRDER
BRFIM-074-1(200)5--05-82

LETTING DATE

LEGEND

INTERSTATE ROUTE	29
FREEWAY OR EXPRESSWAY ROUTE	69
U.S. NUMBERED ROUTE	6
STATE NUMBERED ROUTE	44
COUNTY NUMBERED ROUTE	A13
LOCAL ROAD OR CITY STREET	
RAILROAD	
CORPORATION LINE	
SECTION LINE	
CUL DE SAC	
SECTION, TOWNSHIP & RANGE NUMBERS	9 , T-81N , R-30W
PIPELINE	
AIRPORT	
HYDROLOGY	
BRIDGE	
STATE BOUNDARY	
COUNTY BOUNDARY	
CORPORATE LIMIT LINE	
TOWNSHIP LINE	

IOWA DOT
Highway Division

PLANS OF PROPOSED IMPROVEMENTS ON THE

INTERSTATE ROAD SYSTEM
SCOTT COUNTY

BRIDGE NEW - STEEL GIRDER
EB I-74 AND U.S. 67 RAMPS A AND C
IN BETTENDORF

THE IOWA DEPARTMENT OF TRANSPORTATION STANDARD SPECIFICATIONS FOR HIGHWAY AND BRIDGE CONSTRUCTION, SERIES 2015, PLUS APPLICABLE GENERAL SUPPLEMENTAL SPECIFICATIONS, DEVELOPMENTAL SPECIFICATIONS, SUPPLEMENTAL SPECIFICATIONS AND SPECIAL PROVISIONS SHALL APPLY TO CONSTRUCTION WORK ON THIS PROJECT.

IOWA ONE CALL
1-800-292-8989
www.iowaonecall.com
811 Know what's below. Call before you dig.

R-4E

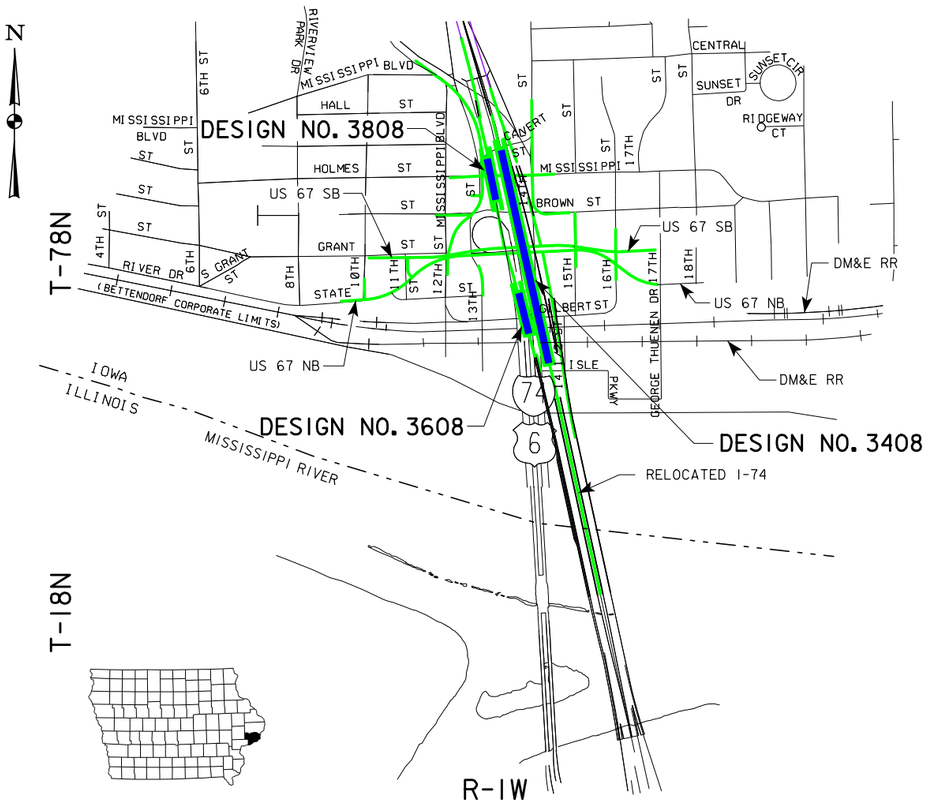

LOCATION MAP - PART OF CITY OF BETTENDORF

ENGLISH STANDARD BRIDGE PLANS

STANDARD	ISSUED	REVISED

REVISIONS

TOTAL SHEETS	494
PROJECT NUMBER	BRFIM-074-1(200)5--05-82
R.O.W. PROJECT NUMBER	
PROJECT IDENTIFICATION NUMBER	03-82-074-010-03

INDEX OF SHEETS

NO.	DESCRIPTION
1	TITLE SHEET
2	ESTIMATE SHEET - DESIGN NO. 3408
3-283	BRIDGE DESIGN NO. 3408
SPS.1-SPS.6	SOIL PROFILE SHEET - DESIGN NO. 3408
284	ESTIMATE SHEET - DESIGN NO. 3608
285-347	BRIDGE DESIGN NO. 3608
SPS.7	SOIL PROFILE SHEET - DESIGN NO. 3608
348	ESTIMATE SHEET - DESIGN NO. 3808
349-389	
SPS.8	SOIL PROFILE SHEET - DESIGN NO. 3808
MU.1	ESTIMATE SHEET - PIER MOCKUP
C.1	ESTIMATE SHEET FOR ROADWAY
C.2-C.7	ROADWAY SHEETS
G.1-G.24	ALIGNMENTS, TIES & BENCHMARKS
J.1	TRAFFIC CONTROL PLAN
N.1-N.18	ITS SHEETS
P.1-P.36	LIGHTING PLANS
U.1-U.10	BRIDGE APPROACH SHEETS

STANDARD ROAD PLANS

STANDARD ROAD PLANS ARE LISTED ON SHEET C.6

DESIGN DATA URBAN

REFER TO INDIVIDUAL SITUATION PLANS FOR TRAFFIC DATA INFORMATION

FRA CROSSING NO. 865645Y
IOWA CROSSING NO. 9712

INDEX OF SEALS

SHEET NO.	NAME	TYPE
1	DAVID J. MORRILL	STRUCTURAL
2	JEFF J. PAPE	STRUCTURAL
SPS.1	KIPKOECH K. CHEPKOIT	GEOTECHNICAL
SPS.7	KIPKOECH K. CHEPKOIT	GEOTECHNICAL
SPS.8	KIPKOECH K. CHEPKOIT	GEOTECHNICAL
MU.1	DAVID J. MORRILL	PIER MOCKUP
C.1	STEVEN S. SWEET	ROADWAY
G.1	COVENTINE FEDIS	SURVEY
G.10	JEFFREY J. TARDY	ROADWAY
N.1	STEVEN P. GARBE	ITS DESIGN
P.1	GEOFFREY H. THIESSE	ELECTRICAL

ALL WORKING DRAWINGS, INCLUDING SHOP DRAWINGS AND FALSEWORK DRAWINGS, SHALL BE SUBMITTED ACCORDING TO ARTICLE 1105.03 OF THE STANDARD SPECIFICATIONS.
THESE DRAWINGS SHALL BE SUBMITTED TO AND CHECKED BY:

ALFRED BENESCH & COMPANY (DESIGN NO. 3608 & 3808)
205 NORTH MICHIGAN AVENUE, SUITE 2400
CHICAGO, IL 60601
(312) 565-0450
DMORRILL@BENESCH.COM

OR

WHKS & COMPANY (DESIGN NO. 3408)
1412 6TH STREET SW
P.O. BOX 1467
MASON CITY, IA 50402-1467
(641) 423-8271
FDAOUD@WHKS.COM

STRUCTURAL DESIGN

LICENSED PROFESSIONAL ENGINEER
David J. Morrill
11799
IOWA

I hereby certify that this engineering document was prepared by me or under my direct personal supervision and that I am a duly licensed Professional Engineer under the laws of the State of Iowa.

Signature: David J. Morrill Date
Printed or Typed Name
My license renewal date is December 31, 2013
Pages or sheets covered by this seal: 1, 210, 284-389, G.10-G.22, & G.24, U.1-U.11

PROJECT DIRECTORY NAME: 82074010 03

SCOTT COUNTY

SCOTT COUNTY - DESIGN NO. 3408, 3608 & 3808

DESIGN TEAM: ALFRED BENESCH, WHKS, ITERIS & HANSON	ENGLISH	IOWA DOT * OFFICE OF BRIDGES AND STRUCTURES	FILE NO. 30253	SCOTT COUNTY	PROJECT NUMBER BRFIM-074-1(200)5--05-82	SHEET NUMBER 1

10:27:08 AM untitled c:\pwise_work\do_not_delete\dms05641\82074200.brg

ESTIMATED BRIDGE QUANTITIES

ITEM NO.	ITEM CODE	ITEM	UNIT	DESIGN 3408	AS BUILT QUANTITY
1	2401-6745625	REMOVAL OF EXISTING BRIDGE	LS	1	
2	2402-2720000	EXCAVATION, CLASS 20	CY	4869	
3	2402-2722000	EXCAVATION, CLASS 22	CY	1486	
4	2403-0100010	STRUCTURAL CONCRETE (BRIDGE)	CY	2,229.2	
5	2403-7000210	HIGH PERFORMANCE STRUCTURAL CONCRETE	CY	5,112.7	
6	2404-7775000	REINFORCING STEEL	LB	690,829	
7	2404-7775005	REINFORCING STEEL, EPOXY COATED	LB	1,908,825	
8	2404-7775009	REINFORCING STEEL, STAINLESS STEEL	LB	39,462	
9	2408-7800000	STRUCTURAL STEEL	LB	4,639,194	
10	2408-8500100	REINFORCED NEOPRENE	SF	3,199	
11	2414-6424110	CONCRETE BARRIER RAILING	LF	4,611.6	
12	2414-6625502	STRUCTURAL STEEL RAILING, TRAFFIC	LF	3,892.0	
13	2414-6772010	CONCRETE PARAPET, FENCE	LF	682.3	
14	2434-0000100	DISC BEARING ASSEMBLIES	EACH	174	
15	2499-2300002	BRIDGE DRAINAGE SYSTEM	LS	1	
16	2501-0201057	PILES, STEEL, HP 10 X 57	LF	690	
17	2501-0201473	PILES, STEEL, HP 14 X 73	LF	4,155	
18	2501-5374060	TEST PILE	LS	1	
19	2507-2638610	CONCRETE SLOPE PROTECTION	SY	1,105	
20	2507-2638660	BRIDGE WING ARMORING - MACADAM STONE	SY	61.0	
21	2526-8285000	CONSTRUCTION SURVEY	LS	1	
22	2533-4980005	MOBILIZATION	LS	1	
23	2599-9999003	HP SELF-CONSOLIDATING CONCRETE (HP-SCC)	CY	866.3	
24	2599-9999008	STRUCTURAL STEEL (GRADE HPS 70W)	LB	867,454	
25	2599-9999009	CORING	LF	713.0	
26	2599-9999009	FENCE, PERFORATED ALUMINUM	LF	685.0	
27	2599-9999009	STRUCTURAL STEEL RAILING, TRAFFIC + BICYCLE	LF	687.9	
28	2599-9999010	EXPANSION JOINT (FINGER PLATE TYPE)	LS	1	
29	2599-9999010	TRIAL BATCH HP SELF-CONSOLIDATING CONCRETE (HP-SCC)	LS	1	
30	2599-9999018	ANTI-GRAFFITI COATING	SY	273.4	
		ALTERNATE AA OPTION 1			
31A	2413-0698121	DECK SURFACING (CLASS O PCC)	SY	133	
		ALTERNATE AA OPTION 2			
31B	2413-0698131	DECK SURFACING (CLASS HPC-O PCC)	SY	133	

ITEM NO.	ESTIMATE REFERENCE INFORMATION
1	SEE GENERAL NOTES AND BRIDGE REMOVAL PLAN.
4	INCLUDES 25.2 CY IN THE ABUTMENT AND 2204.0 CY IN THE PIERS. INCLUDES MATERIAL AND LABOR ASSOCIATED WITH PROVIDING AND INSTALLING CONDUIT (FOR PIER LIGHTING AND ITS) EMBEDDED IN EB PIER CAPS 17-20, 23-24, 29-31 AND FOOTINGS 18, 20, 21, 26 AND 27 AS DETAILED ON SHEETS P.20-P.25, P.27, P.28, N.16 TO N.18. INCLUDES 670 FT. OF 1" DIA., 80 FT. OF 2" DIA. AND 40 FT. OF 3" DIA. RIGID STEEL CONDUIT. INCLUDES ALL COSTS ASSOCIATED WITH CONCRETE ANCHORS TO SECURE CONDUIT TO THE PIERS AS DETAILED IN THE N SHEETS AND P SHEETS. SEE GENERAL NOTES FOR ADDITIONAL INFORMATION CONCERNING CONDUIT COST BREAKDOWN.
5	INCLUDES 4549.2 CY IN THE SUPERSTRUCTURE, 110.3 CY IN THE ABUTMENT AND 453.2 CY IN THE PIERS. INCLUDES THE CONCRETE FOR THE STRUCTURAL DECK SLAB, ABUTMENT, MASKWALLS, AND EB PIER CAPS 21, 22, 25, 26, 27 AND 28. INCLUDES FURNISHING AND PLACING 3" DIAMETER PVC PLASTIC PIPE AND EXPANDING FOAM IN THE ABUTMENT WINGS AND MASKWALL. INCLUDES FURNISHING AND PLACING SUBDRAIN (INCLUDING EXCAVATION), FLOODABLE BACKFILL, POROUS BACKFILL, GEOTEXTILE FABRIC, WATER FLOODING AND SUBDRAIN OUTLET AT ABUTMENTS. INCLUDES ALL PREFORMED EXPANSION JOINT FILLER REQUIRED. INCLUDES FURNISHING AND PLACING CONCRETE SEALER AT EB PIERS 21, 25 AND 28 AND EB ABUTMENT 32. INCLUDES MATERIAL AND LABOR ASSOCIATED WITH PROVIDING AND INSTALLING CONDUIT (FOR PIER LIGHTING AND ITS) EMBEDDED IN THE DECK AND EB PIER CAPS 21, 22, 25-28 AND AS DETAILED ON SHEETS P.25, P.27-P.28, N.17 & N.18; INCLUDES 690 FT. OF 1" DIA., 40 FT. OF 2" DIA. AND 10 FT. OF 3" DIA. RIGID STEEL CONDUIT. INCLUDES MATERIAL AND LABOR ASSOCIATED WITH PROVIDING AND INSTALLING RIGID STEEL CONDUIT IN THE DECK. SEE N SHEETS FOR DETAILS. INCLUDES ALL COSTS ASSOCIATED WITH CONCRETE ANCHORS TO SECURE CONDUIT TO THE PIERS AS DETAILED IN THE N SHEETS AND P SHEETS. SEE GENERAL NOTES FOR ADDITIONAL INFORMATION CONCERNING CONDUIT COST BREAKDOWN. REFER TO THE DEVELOPMENTAL SPECIFICATION FOR "HIGH PERFORMANCE CONCRETE FOR STRUCTURES" FOR ADDITIONAL INFORMATION.
6	INCLUDES 690829 LBS. REINFORCING STEEL IN THE PIERS. INCLUDES MECHANICAL SPLICE ASSEMBLIES REQUIRED FOR NON-COATED REINFORCING.

whks
engineers + planners + land surveyors

ITEM NO.	ESTIMATE REFERENCE INFORMATION
7	INCLUDES 1595001 LBS. EPOXY COATED REINFORCING STEEL IN THE SUPERSTRUCTURE, 14491 LBS. EPOXY COATED REINFORCING STEEL IN THE ABUTMENT AND 299333 LBS. EPOXY COATED REINFORCING STEEL IN THE PIERS. INCLUDES MECHANICAL SPLICE ASSEMBLIES REQUIRED FOR EPOXY COATED REINFORCING.
8	INCLUDES 39298 LBS. STAINLESS STEEL REINFORCING STEEL IN THE SUPERSTRUCTURE AND 164 LBS. STAINLESS STEEL REINFORCING STEEL IN THE ABUTMENT. ALL VERTICAL BARRIER RAIL REINFORCING STEEL WHICH EXTENDS FROM THE DECK OR THE ABUTMENT WINGWALLS AND ALL HORIZONTAL REINFORCING STEEL THAT CONNECTS THE MASKWALL TO OTHER STRUCTURAL ELEMENTS SHALL BE DEFORMED BAR GRADE 60, TYPE 304, 316L OR 316LN IN ACCORDANCE WITH ASTM A955/A955M-11. THE REINFORCING BARS AND COUPLING NUTS SHALL MEET THE REQUIREMENTS OF MATERIALS IM 451 APPENDIX E EXCEPT THE BAR AND COUPLING MATERIAL SHALL BE TYPE 304, 316L OR 316LN IN ACCORDANCE WITH ASTM A955/A955M-11. INCLUDES 14 STAINLESS STEEL COUPLING NUTS FOR THREADED NO. 5 REBAR. REFER TO 'GENERAL NOTES' FOR ADDITIONAL ESTIMATE REFERENCE INFORMATION.
9	INCLUDES ALL COSTS ASSOCIATED WITH THE FLUOROPOLYMER PAINT SYSTEM APPLIED TO NON-HPS 70W STEEL IN ACCORDANCE WITH THE 'SPECIAL PROVISIONS FOR FLUOROPOLYMER PAINT FOR STRUCTURAL STEEL'.
10	PAYMENT FOR REINFORCED NEOPRENE WILL BE MADE ON A SQUARE FOOT BASIS FOR NEOPRENE INCORPORATED INTO THE STRUCTURE.
11	INCLUDES STRUCTURAL CONCRETE REQUIRED FOR CONSTRUCTION OF LIGHT POLE BASES. IF PLACEMENT OF CONCRETE IS DONE BY THE SLIPFORMING METHOD, CLASS BR CONCRETE IS REQUIRED. CAST-IN-PLACE BARRIER RAILS SHALL USE HIGH PERFORMANCE CONCRETE MIX. PRICE BID FOR THIS ITEM SHALL INCLUDE THE COST OF CAST-IN-PLACE FORMS IF REQUIRED FOR PLACEMENT OF THE CONCRETE. INCLUDES MATERIAL AND LABOR ASSOCIATED WITH PROVIDING AND INSTALLING RIGID STEEL CONDUIT, JUNCTION BOXES, FITTINGS AND CONCRETE INSERTS AS DESCRIBED IN THE GENERAL NOTES AND SHOWN IN THE LIGHTING & ITS DETAILS. INCLUDES 5910 FT. OF 2" DIA. AND 140 FT. OF 1" DIA. RIGID STEEL CONDUIT.
12	REFER TO THE DEVELOPMENTAL SPECIFICATION FOR "INSTALLING ADHESIVE-BONDED ANCHORS AND DOWELS FOR TRAFFIC RAILINGS". INCLUDES INSTALLATION OF (NOT SUPPLY OF) FINAL SECTION OF RAIL DIRECTLY SOUTH OF THE PIER 16.
14	INCLUDES DISC BEARING, SOLE PLATE, GUIDE BARS, SLIDER PLATE, MASONRY PLATE, $\frac{1}{8}$" PREFORMED MASONRY PADS AND ANCHOR BOLTS.
15	INCLUDES MATERIAL AND LABOR ASSOCIATED WITH PROVIDING AND INSTALLING DECK DRAINAGE SYSTEM, INCLUDING DECK DRAINS, PIPING, PIPE SUPPORTS AND CATCH BASIN BELOW FINGER JOINT TROUGHS. INCLUDES 41 DECK DRAINS AS WELL AS DRAINAGE SYSTEMS AT PIERS 16, 21, 25 AND 28 AND ABUTMENT 32 AS DETAILED ON DESIGN SHEETS 268 THROUGH 275. BRIDGE DRAINAGE SYSTEM SHALL BE MEASURED AND PAID FOR AT THE LUMP SUM CONTRACT PRICE.
16	INCLUDES STEEL PILE POINTS FOR ALL ABUTMENT PILES.
17	INCLUDES STEEL PILE POINTS FOR ALL PIER PILES.
18	SEE GENERAL NOTES.
19	INCLUDES PLACEMENT OF SLOPE PROTECTION AT ABUTMENT 32 EB AND ABUTMENT 32 WB. INCLUDES FURNISHING AND PLACING ENGINEERING FABRIC AS DETAILED, #4 REBARS, POROUS BACKFILL OR GRANULAR SUBBASE BACKFILL AT FRONT FACE OF ABUTMENT FOOTING, AND ALL REQUIRED EXCAVATING, SHAPING AND COMPACTING.
20	INCLUDES FURNISHING AND PLACING ENGINEERING FABRIC, MACADAM STONE, 4"x6" TREATED TIMBERS, $\frac{1}{2}$" DIAMETER PINS (OR REBARS), AND ALL REQUIRED EXCAVATION, SHAPING, AND COMPACTION FOR WING ARMORING.
23	INCLUDES MATERIAL AND LABOR ASSOCIATED WITH PROVIDING AND INSTALLING CONDUIT (FOR PIER LIGHTING AND ITS) EMBEDDED IN EB PIER COLUMNS 18, 20, 21, 26 AND 27 AS DETAILED ON SHEETS P.22, P.28, N.16 TO N.18; INCLUDES 160 FT. OF 2" DIA., AND 90 FT. OF 3" DIA. RIGID STEEL CONDUIT. SEE GENERAL NOTES FOR ADDITIONAL INFORMATION CONCERNING CONDUIT COST BREAKDOWN.
24	INCLUDES ALL COSTS ASSOCIATED WITH THE FLUOROPOLYMER PAINT SYSTEM APPLIED TO HPS 70W STEEL IN ACCORDANCE WITH THE "SPECIAL PROVISIONS FOR FLUOROPOLYMER PAINT FOR STRUCTURAL STEEL".
25	INCLUDES ALL COSTS ASSOCIATED WITH DRILLING OR CORING 24" DIAMETER (MIN.) HOLES INTO BEDROCK AT EB PIERS 22, 29, 30 AND 31, MAINTAINING THE OPEN HOLES AND FURNISHING AND PLACING CLASS 'C' CONCRETE / GRANULAR BACKFILL IN THE CORED HOLES. SEE GENERAL NOTES. THE METHOD OF MEASURMENT AND BASIS OF PAYMENT FOR THIS ITEM IS LINEAL FEET CORED TO THE NEAREST TENTH OF A FOOT MEASURED BY THE ENGINEER.
27	REFER TO THE DEVELOPMENTAL SPECIFICATION FOR "INSTALLING ADHESIVE-BONDED ANCHORS AND DOWELS FOR TRAFFIC RAILINGS". INCLUDES INSTALLATION OF (NOT SUPPLY OF) FINAL SECTION OF RAIL DIRECTLY SOUTH OF THE PIER 16.
28	INCLUDES ALL NECESSARY EXPANSION DEVICE MATERIALS AND HARDWARE AS DETAILED ON DESIGN SHEETS 231 THROUGH 267, EXCEPT REINFORCED NEOPRENE AND ITEMS INCLUDED IN THE PRICE BID FOR BRIDGE DRAINAGE SYSTEM. INCLUDES EXPANSION JOINTS AT PIERS 16, 21, 25 AND 28 AND ABUTMENT 32. EXPANSION JOINT (FINGER PLATE TYPE) SHALL BE MEASURED AND PAID FOR AT THE LUMP SUM CONTRACT PRICE.
30	SEE SPECIAL PROVISIONS FOR ANTI-GRAFFITI COATING.
31A & 31B	DECK SURFACING TO BE CONSTRUCTED DIRECTLY SOUTH OF THE PIER 16 EXPANSION JOINT. SEE LONGITUDINAL SECTION DETAILS.

STRUCTURAL DESIGN

LICENSED PROFESSIONAL ENGINEER
Jeff J. Pape
16531
IOWA

I hereby certify that this engineering document was prepared by me or under my direct personal supervision and that I am a duly licensed Professional Engineer under the laws of the State of Iowa.

Signature: Jeff J. Pape Date
Printed or Typed Name
My license renewal date is December 31, 2016

Pages or sheets covered by this seal: SHEETS 2 THRU 283

DESIGN FOR VARIABLE SKEW (L.A.)

2271'-6 x VARI. CONTINUOUS WELDED GIRDER BRIDGE-EBL W/14' BIKE TRAIL

138'-10 & 151'-0$\frac{7}{8}$ END SPANS MULTIPLE LENGTH INTERIOR SPANS

ESTIMATED QUANTITIES

STA. 6792+60.93 - 52' LEFT ℄ I-74 OCTOBER, 2015

SCOTT COUNTY

IOWA DEPARTMENT OF TRANSPORTATION - HIGHWAY DIVISION

DESIGN SHEET NO. 1 OF 282 FILE NO. 30253 DESIGN NO. 3408

GENERAL NOTES:

THIS DESIGN IS FOR A NEW 2271'-6$\frac{1}{8}$ X VARIABLE WIDTH CURVED AND STRAIGHT WELDED STEEL GIRDER VIADUCT BRIDGE ON MAINLINE EASTBOUND INTERSTATE 74 OVER DM&E RAILROAD, STATE ST., U.S. 67 AND MISSISSIPPI BLVD. THIS DESIGN INCLUDES UNITS 1, 2, 3 AND 4 OF EASTBOUND I-74.

REMOVAL OF PORTIONS OF THE EXISTING VIADUCT BRIDGES (DESIGN NO.'S 568 AND 2070) ARE INCLUDED IN THIS DESIGN (SEE BRIDGE REMOVAL DETAILS). COPIES OF THE ORIGINAL DESIGN PLANS OF THE EXISTING BRIDGES WILL BE MADE AVAILABLE TO THE CONTRACTOR. CONTACT THE OFFICE OF CONTRACTS - HIGHWAY DIVISION - IOWA D.O.T. - AMES. DIMENSIONS SHOWN ON THESE PLANS ARE BASED ON DESIGN PLANS.

THE LUMP SUM BID FOR "REMOVAL OF EXISTING BRIDGE" SHALL INCLUDE REMOVAL OF PORTIONS OF THE EXISTING VIADUCT BRIDGES AS DETAILED ON THE REMOVAL PLAN.

REMOVALS SHALL BE IN ACCORDANCE WITH SECTION 2401, OF THE STANDARD SPECIFICATIONS, EXCEPT THE CONTRACTOR SHALL REMOVE SUBSTRUCTURES TO DEPTHS AS MENTIONED ON THE 'REMOVAL PLAN'. ANY DAMAGE TO ANY STEEL OR CONCRETE NOT TO BE REMOVED SHALL BE THE RESPONSIBILITY OF THE CONTRACTOR AND REPAIRED AT NO EXTRA COST TO THE STATE.

THE CONTRACTOR SHALL REMOVE LIGHT POLES, LUMINARES, ATTACHED CONDUIT AND ALL ELECTRICAL CONDUCTORS PRIOR TO DEMOLITION OF THE SUPERSTRUCTURE. THESE ITEMS SHALL BECOME THE CONTRACTOR'S PROPERTY. THESE SHALL BE REMOVED FROM THE SITE IN ACCORDANCE WITH ARTICLE 1104.08 OF THE STANDARD SPECIFICATIONS.

FAINT LINES ON PLANS INDICATE EXISTING PORTIONS OF THE VIADUCT BRIDGES.

SCRAPE SAMPLES WERE TAKEN FROM AREAS OF THE EXISTING VIADUCT BRIDGES TO GET AN INDICATION OF THE EXISTENCE OF AND LEVEL OF TOTAL CHROMIUM AND TOTAL LEAD. ANALYSIS OF TOTAL LEAD ON THESE SAMPLES IS SHOWN IN THE FOLLOWING TABLE IN PARTS PER MILLION (PPM). ANALYSIS OF TOTAL CHROMIUM ON THESE SAMPLES IS ALSO SHOWN IN THE FOLLOWING TABLE IN PPM. THESE ANALYSES SHOW THE EXISTENCE OF THESE TWO TOXIC CONSTITUENTS. LEVELS INDICATED BY THESE TESTS COULD CREATE CONDITIONS ABOVE REGULATORY LIMITS FOR HEALTH AND SAFETY REQUIREMENTS. NO OTHER CONSTITUENTS WERE ANALYZED. THE BIDDER SHOULD NOT RELY ON THE DEPARTMENT'S TESTING AND ANALYSIS FOR ANY PURPOSE OTHER THAN AS AN INDICATION OF THE EXISTENCE OF THESE TWO TOXIC CONSTITUENTS.

BRIDGE	DATE SAMPLED	TOTAL LEAD (PPM)	TOTAL CHROMIUM (PPM)
WESTBOUND VIADUCT	1/19/1994	480	29
WESTBOUND VIADUCT	2/12/2001	<50	<50
WESTBOUND VIADUCT	2/10/2009	301	42
EASTBOUND VIADUCT	1/19/1994	3000	70
EASTBOUND VIADUCT	2/12/2001	<50	<50
EASTBOUND VIADUCT	2/10/2009	526	48

THE CONTRACTOR SHALL CONDUCT THEIR OPERATIONS IN SUCH A MANNER THAT ANY PAINT REMOVED DURING DEMOLITION IS CONTAINED, COLLECTED, AND DISPOSED OF IN ACCORDANCE WITH SECTION 2508, OF THE STANDARD SPECIFICATIONS. BEFORE DELIVERY OF ANY SCRAP STEEL THE CONTRACTOR SHALL PROVIDE A WRITTEN NOTICE TO THE RECEIVING FACILITY. THIS NOTICE SHALL AT A MINIMUM INCLUDE:

1. A NOTICE THAT THE SCRAP STEEL IS COATED WITH PAINT THAT HAS REGULATED MATERIALS AT LEVELS WHICH COULD BE HAZARDOUS TO EMPLOYEES OR THE ENVIRONMENT.
2. A COPY OF THE SCRAPE SAMPLE PROVIDED IN THE CONTRACT DOCUMENTS.
3. A SIGNATURE BLOCK FOR THE RECEIVING FACILITY TO CONFIRM THEIR RECEIPT OF THIS INFORMATION.

A COPY OF THIS NOTICE, SIGNED BY THE RECEIVING FACILITY, SHALL BE RETURNED TO THE ENGINEER BEFORE ANY SCRAP STEEL IS REMOVED FROM THE PROJECT. THE COST OF HANDLING AND DISPOSAL OF ANY PAINTED STEEL OR REMOVED PAINT IS INCIDENTAL TO THE REMOVAL BID ITEM.

DURING CONSTRUCTION OF THIS PROJECT THE BRIDGE CONTRACTOR WILL BE REQUIRED TO COORDINATE OPERATIONS WITH THOSE OF OTHER CONTRACTORS WORKING WITHIN THE SAME AREA. OTHER WORK IN PROGRESS DURING THE SAME PERIOD OF TIME IS LISTED IN THE ROADWAY PLANS.

REFERRAL NOTE

PROJECT NUMBER: BRFIM-074-1(197)5--05-82
DESIGN NUMBER: 3208
SEE PIER 16 FOR PIER CAP DETAILS NOT SHOWN.

THE CITY AND UTILITY COMPANIES WHOSE FACILITIES ARE SHOWN ON THE PLANS OR KNOWN TO BE WITHIN THE CONSTRUCTION LIMITS SHALL BE NOTIFIED BY THE BRIDGE CONTRACTOR OF THE CONSTRUCTION STARTING DATE.

THIS BRIDGE IS DESIGNED FOR HL-93 LOADING, PLUS 20 LBS. PER SQUARE FOOT OF ROADWAY FOR FUTURE WEARING SURFACE.

GUARDRAIL IS TO BE PLACED BY OTHERS.

IT SHALL BE THE BRIDGE CONTRACTOR'S RESPONSIBILITY TO PROVIDE SITES FOR EXCESS EXCAVATED MATERIAL. NO PAYMENT FOR OVERHAUL WILL BE ALLOWED FOR MATERIAL HAULED TO THESE SITES.

whks
engineers + planners + land surveyors

GENERAL NOTES (CONT.):

THIS STRUCTURE SHALL BE BUILT WITH WEATHERING STEEL. ALL STRUCTURAL STEEL, EXCEPT AS NOTED, SHALL CONFORM TO ASTM A709 GRADE 50W. PAINTING REQUIREMENTS FOR THIS STRUCTURE SHALL BE IN ACCORDANCE WITH THE "SPECIAL PROVISIONS FOR FLUOROPOLYMER PAINT FOR STRUCTURAL STEEL". SEE SUPERSTRUCTURE STEEL PAINTING NOTES ON DESIGN SHEET 97 .

THESE BRIDGE PLANS LABEL ALL REINFORCING STEEL WITH ENGLISH NOTATION (5a1 IS $\frac{5}{8}$ INCH DIAMETER BAR). ENGLISH REINFORCING STEEL RECEIVED IN THE FIELD MAY DISPLAY THE FOLLOWING "BAR DESIGNATION". THE "BAR DESIGNATION" IS THE STAMPED IMPRESSION ON THE REINFORCING BARS, AND IS EQUIVALENT TO THE BAR DIAMETER IN MILLIMETERS.

ENGLISH SIZE	3	4	5	6	7	8	9	10	11
BAR DESIGNATION	10	13	16	19	22	25	29	32	36

KEYWAY DIMENSIONS SHOWN ON THE PLANS ARE BASED ON NOMINAL DIMENSIONS UNLESS STATED OTHERWISE. IN ADDITION, THE BEVEL USED ON THE KEYWAY SHALL BE LIMITED TO A MAXIMUM OF 10 DEGREES FROM VERTICAL.

THE BRIDGE CONTRACTOR SHALL WORK IN SUCH A MANNER THAT EQUIPMENT AND MATERIALS SHALL NOT BE ALLOWED TO INTERFERE WITH TRAIN TRAFFIC OR BE ALLOWED TO FALL ON THE RAILROAD TRACKS. INTERFERENCE ABOVE THE RAILROAD TRACK AREA SHALL BE COORDINATED WITH THE RAILROAD.

ABUTMENT PILES SHALL NOT BE DRIVEN FOR A MINIMUM OF 7 DAYS FOLLOWING COMPLETION OF APPROACH FILLS. THE TIME PERIOD BETWEEN COMPLETION OF FILLS AND DRIVING PILES MAY BE CHANGED AS ORDERED BY THE ENGINEER BASED UPON REVIEW OF SETTLEMENT PLATES. SEE SETTLEMENT PLATE LOCATIONS ON SPS. 6.

AT LOCATIONS WHERE THE SOIL COLUMN BETWEEN THE BOTTOM OF PILE CAP AND BEDROCK IS LESS THAN 10 FEET, 24" DIA. (MIN.) HOLES SHALL BE DRILLED OR CORED A MINIMUM OF 3 FEET INTO SOUND ROCK TO OBTAIN A MINIMUM OF 10 FEET OF PILE LENGTH BELOW THE BOTTOM OF FOOTING. HOLES SHALL BE DRILLED OR CORED AT LEAST TO THE ELEVATIONS SHOWN ON THE SITUATION PLANS. THE PILES SHALL BE SEATED INTO THE DRILLED OR CORED HOLES WITH A PILE DRIVING HAMMER TO PROVIDE THE SPECIFIED DESIGN BEARING. AFTER THE PILES ARE SEATED, THE DRILLED OR CORED HOLES SHALL BE FILLED WITH CLASS 'C' CONCRETE FROM THE BOTTOM OF THE HOLE TO THE TOP OF THE BEDROCK. THE REMAINING PORTION OF THE HOLES SHALL BE BACKFILLED WITH GRANULAR MATERIAL. THIS PROCEDURE IS ANTICIPATED FOR PILES AT EB PIERS 22, 29, 30 AND 31. HOLES SHOULD BE DRILLED OR CORED THROUGH LIMESTONE AT EB PIERS 22 AND 29, AND CYCLICAL ROCK AT EB PIERS 30 AND 31.

THE COST OF CORING 24" DIA. (MIN.) HOLES INTO BEDROCK, MAINTAINING THE OPEN HOLES AND FURNISHING AND PLACING THE CLASS 'C' CONCRETE / GRANULAR BACKFILL SHALL BE INCLUDED IN THE UNIT PRICE BID FOR CORING. ALL COSTS ASSOCIATED WITH DRILLING OR EXCAVATING TO THE TOP OF THE BEDROCK TO OBTAIN ACCESS FOR CORING SHALL BE INCIDENTAL TO THE CONSTRUCTION PRICE. IF BEDROCK IS NOT ENCOUNTERED WITHIN 10 FEET BELOW THE ELEVATION OF THE BOTTOM OF THE PILE FOOTING, THE CORING INTO ROCK SHALL BE OMITTED (WITH THE EXCEPTION OF PIER 22, WHICH MUST BE CORED AND GROUTED A MIN. 1' INTO SOUND BEDROCK) AND THE PILE SHALL BE DRIVEN INTO ROCK IN ACCORDANCE WITH THE STANDARD SPECIFICATIONS.

CAST IN-ONE-PIECE STEEL PILE POINTS ARE REQUIRED FOR EB PIERS 22, 23, 29, 30 AND 31 AND EB ABUTMENT 32 IN ACCORDANCE WITH ARTICLE 4167.02 OF THE CURRENT STANDARD SPECIFICATIONS AND MATERIALS IM 468.

TWO TEST PILES EACH SHALL BE DRIVEN AT EB PIERS 22, 29, 30 AND 31. BOTH TEST PILES FOR ANY PIER SHALL NOT BE PLACED IN THE SAME FOOTING. TEST PILES MAY BE USED AS PRODUCTION PILES. ONE TEST PILE PER FOOTING IS ALLOWED TO BE SHORTER THAN THE MINIMUM PILE LENGTH STATED ABOVE AND STILL CONSIDERED A PRODUCTION PILE.

SUBSTRUCTURE CONCRETE SHALL BE PROTECTED FROM STAINING BY A WRAPPING OF POLYETHYLENE OR SIMILAR MATERIALS WHICH SHALL BE LEFT IN PLACE AND KEPT IN A SERVICEABLE CONDITION UNTIL AFTER THE DECK HAS BEEN PLACED. IF SUBSTRUCTURE CONCRETE IS STAINED, THE STAINS SHALL BE REMOVED BY METHODS APPROVED BY THE ENGINEER. ALL COSTS ASSOCIATED WITH THE PROTECTION AND ANY REQUIRED CLEANING OF THE SUBSTRUCTURE CONCRETE SHALL BE INCLUDED IN THE PRICE BID FOR "STRUCTURAL STEEL".

THE CONTRACTOR SHALL NOTE THE STANDARD ABUTMENT DETAILS HAVE BEEN MODIFIED TO OFFSET THE ABUTMENT FOOTING FROM THE WINGWALL AND THE ABUTMENT FOOTING FROM THE BACKWALL TO AID IN TYING THE REINFORCING STEEL BETWEEN THE FOOTING TO WINGWALL AND THE FOOTING TO BACKWALL.

CONCRETE BARRIER RAILS PLACED USING THE SLIPFORM METHOD WILL REQUIRE THE USE OF A CLASS BR CONCRETE IN ACCORDANCE WITH ARTICLE 2513.03, A, 2, OF THE STANDARD SPECIFICATIONS. CAST-IN-PLACE BARRIER RAILS SHALL USE HIGH PERFORMANCE CONCRETE. CLASS D CONCRETE IS NOT PERMITTED FOR CONCRETE BARRIER RAILS (CAST-IN-PLACE OR SLIPFORMED METHOD).

THE APPROACH FILLS AS SHOWN ARE NOT PART OF THIS CONTRACT, BUT ARE TO BE IN PLACE BEFORE ABUTMENT PILES ARE DRIVEN. THE BRIDGE CONTRACTOR IS TO LEVEL OFF AND SHAPE THE BERMS TO THE ELEVATIONS AND DIMENSIONS SHOWN. DRESSING OF SLOPES OUTSIDE THE BRIDGE AREA NOT DISTURBED BY THE BRIDGE CONTRACTOR SHALL BE PAID FOR AS EXTRA WORK.

GENERAL NOTES (CONT.):

LONGITUDINAL GROOVING WILL NOT BE A PART OF THIS CONTRACT, BUT WILL BE DONE BY OTHERS PRIOR TO OPENING THE BRIDGE TO TRAFFIC.

THE NEW VIADUCT BRIDGE WILL BE CLOSED TO TRAFFIC DURING CONSTRUCTION. SEE TRAFFIC CONTROL PLAN NOTE ON THIS SHEET AND TRAFFIC CONTROL PLAN ON SHEET J.1.

STAINLESS STEEL REINFORCING SHALL BE SHIPPED, HANDLED AND PLACED SUCH THAT CARBON STEEL DOES NOT COME IN CONTACT WITH THE STAINLESS STEEL REINFORCING. PADDING SHALL BE USED TO SEPARATE CARBON STEEL BUNDLING BANDS OR LIFTING DEVICES FROM THE STAINLESS STEEL REINFORCING. WIRE ROPE SHALL NOT BE USED IN LIFTING OR HANDLING THE STAINLESS STEEL REINFORCING. COVER STAINLESS STEEL REINFORCING WITH TARPS DURING OUTDOOR STORAGE. USE WOODEN SPACERS TO SEPARATE BUNDLES OF STAINLESS STEEL REINFORCING FROM OTHER TYPES OF REINFORCING. USE WOODEN SUPPORTS TO STORE STAINLESS STEEL REINFORCING OFF OF THE GROUND OR SHOP FLOOR.

THIS CONTRACT INCLUDES PLACING CONCRETE SLOPE PROTECTION AND WING ARMORING AT ABUTMENT 32 EB AND ABUTMENT 32 WB AS DETAILED IN THESE PLANS.

NOTE:
CONTRACTOR SHALL COORDINATE WITH THE DM&E RAILROAD.
SEE SPECIAL PROVISIONS FOR ADDITIONAL INFORMATION.

NOTE:
THE ROADWAY WILL BE CLOSED TO THRU TRAFFIC. REFER TO THE TRAFFIC CONTROL PLAN ELSEWHERE IN THESE PLANS.

NOTE:
POLLUTION PREVENTION PLAN SHOWN ELSEWHERE IN THESE PLANS.

NOTE:
ROADWAY QUANTITIES SHOWN ELSEWHERE IN THESE PLANS.

DESIGN HISTORY AT THIS SITE

DESIGN NO.	TYPE OF WORK
DES. NO.'S 568, 2070, 173	BETTENDORF APPROACHES CONSTRUCTION.
DES. NO. 601	BUSHING REPLACEMENT REPAIRS.
DES. NO. 684	EASTBOUND APPROACH BRIDGE REPAIRS.
DES. NO. 784	WESTBOUND APPROACH BRIDGE REPAIRS.
DES. NO. 306, 406	GIRDER COLLISION REPAIR.

BRIDGE DECK DIMENSIONS TABLE

NO.	ITEM	UNIT	QUANTITY
1	DECK LENGTH	L.F.	2274.82
2	MINIMUM DECK WIDTH	L.F.	63.67
3	MAXIMUM DECK WIDTH	L.F.	125.23
4	DECK AREA	S.F.	175,008.7

1. DECK LENGTH IS MEASURED FROM ℄ OF EXPANSION JOINT AT PIER 16 TO THE FACE OF PAVING NOTCH AT ABUTMENT 32 EB ALONG THE CENTERLINE OF I-74.

2,3. DECK WIDTHS ARE MEASURED FROM OUT-TO-OUT OF DECK PERPENDICULAR TO THE CENTERLINE OF ROADWAY.

4. DECK AREA IS BASED ON THE TABULATED DECK LENGTH AND OUT-TO-OUT DECK DIMENSIONS.

DESIGN FOR VARIABLE SKEW (L.A.)

2271'-6 x VARI. CONTINUOUS WELDED GIRDER BRIDGE-EBL W/14' BIKE TRAIL

138'-10 & 151'-0$\frac{7}{8}$ END SPANS MULTIPLE LENGTH INTERIOR SPANS

GENERAL NOTES

STA. 6792+60.93 - 52' LEFT ℄ I-74 OCTOBER, 2015

SCOTT COUNTY

IOWA DEPARTMENT OF TRANSPORTATION - HIGHWAY DIVISION

DESIGN SHEET NO. 2 OF 282 FILE NO. 30253 DESIGN NO. 3408

INDEX OF SHEETS - DESIGN NO. 3408

SHEET DESCRIPTIONS	SHEET NUMBER
ESTIMATED QUANTITIES	2
GENERAL NOTES	3
SITUATION PLAN	5
REMOVAL PLAN	12
STAGE CONSTRUCTION PLAN	14
STAKING DIAGRAM	15
PIER DETAILS	21
PIER 17	22
PIER 18	26
PIER 19	30
PIER 20	35
PIER 21	40
PIERS 22-31	46
ANCHOR BOLT LAYOUT	57
FOOTING DETAILS	59
PIERS 22-31 QUANTITIES	66
ABUTMENT DETAILS	67
SUPERSTRUCTURE DETAILS	75
FRAMING PLAN	75
GIRDER DETAILS	82
SIGN SUPPORT DETAILS	94
LANE UTILIZATION STRUCTURE DETAILS	96
WEATHERING STEEL & PAINTING NOTES	98
MOMENT & REACTION TABLE	99
SPLICE DETAILS	104
FABRICATION, DEFLECTION, & HAUNCH DIAGRAMS & TABLES	123
TRANSVERSE SECTION	145
SUPERSTRUCTURE NOTES	148
LONGITUDINAL SECTIONS	149
WELDING DETAILS	153
BEARING DETAILS & TABLES	155
BEAM LINE HAUNCH ELEVATION TABLE	182
MISCELLANEOUS DATA TABLE	187
SLAB ELEVATIONS	193
BARRIER RAILING & FENCE DETAILS	203
LIGHTING DETAILS	226
FINGER JOINT DETAILS	232
DRAINAGE SYSTEM DETAILS	269
SUBDRAIN DETAILS	277
SLOPE PROTECTION	278
BRIDGE WING ARMORING	280
ABUTMENT BACKFILL DETAILS	282
ANTI-GRAFFITI COATING DETAILS	283
SOIL PROFILE SHEETS	SPS.1

SHOP DRAWING SUBMITTALS

SHOP DRAWINGS SHALL BE SUBMITTED FOR THE FOLLOWING ITEMS SHOWN IN THE TABLE BELOW. (NOTE ADDITIONAL SHOP DRAWINGS MAY BE REQUIRED IN ACCORDANCE WITH ARTICLE 1105.03 OF THE STANDARD SPECIFICATIONS.)

SUBMITTAL REQUIREMENTS FOR SHOP DRAWINGS SHOULD BE IN ACCORDANCE WITH ARTICLE 1105.03, OF THE STANDARD SPECIFICATIONS, FOR HIGHWAY AND BRIDGE CONSTRUCTION OF THE IOWA DEPARTMENT OF TRANSPORTATION.

1	STRUCTURAL STEEL
2	BEARINGS
3	EXPANSION JOINTS
4	STEEL RAILINGS
5	BRIDGE DRAINAGE SYSTEM (INCLUDING REINFORCED NEOPRENE)
6	SIGN SUPPORTS
7	IDENTITY ELEMENT ANCHOR BOLTS
8	ERECTION PLANS
9	FENCE, PERFORATED ALUMINUM

whks
engineers + planners + land surveyors

GENERAL NOTES (CONT.):

ALL REINFORCING BARS AND BARS NOTED AS DOWELS SUPPLIED FOR THIS STRUCTURE SHALL BE DEFORMED REINFORCEMENT UNLESS OTHERWISE NOTED OR SHOWN.

THE CONDUIT AND JUNCTION BOXES FOR THIS PROJECT ARE TO BE PAID FOR AS FOLLOWS:

1. CONDUIT AND JUNCTION BOXES EMBEDDED IN THE CONCRETE BARRIERS SHALL BE INCLUDED IN THE COST OF THE 'CONCRETE BARRIER RAILING'.

2. CONDUIT EMBEDDED IN THE PIER CAPS SHALL BE INCLUDED IN THE COST OF 'HIGH PERFORMANCE STRUCTURAL CONCRETE' OR 'STRUCTURAL CONCRETE (BRIDGE)' AS APPLICABLE.

3. CONDUIT EMBEDDED IN THE PIER COLUMNS SHALL BE INCLUDED IN THE COST OF 'HIGH PERFORMANCE SELF-CONSOLIDATING CONCRETE'.

4. CONDUIT EMBEDDED IN THE PIER FOOTINGS SHALL BE INCLUDED IN THE COST OF 'STRUCTURAL CONCRETE (BRIDGE)'.

5. PRIVATE UTILITY CONDUIT AND JUNCTION BOXES, EITHER EMBEDDED IN THE DECK OR ATTACHED TO STRUCTURE, SHALL BE PAID FOR AS OUTLINED ON SHEET C.2.

6. ITS CONDUIT AND JUNCTION BOXES ATTACHED TO STRUCTURE SHALL BE PAID FOR AS OUTLINED ON SHEET C.2.

7. AESTHETIC LIGHTING, COMMUNICATION CONDUIT AND JUNCTION BOXES LOCATED WITHIN THE BARRIER RAIL SHALL BE CONSIDERED INCIDENTAL TO THE BID ITEM: "CONCRETE BARRIER RAILING". ALL OTHER LOCATIONS SHALL BE PAID FOR AS OUTLINED ON SHEET C.2.

8. ALL CONCRETE INSERTS REQUIRED FOR HANGING THE CONDUIT AND JUNCTION BOXES FROM THE BRIDGE DECK (EXCLUDING PRIVATE UTILITIES) SHALL BE INCLUDED IN THE COST OF THE 'CONCRETE BARRIER RAILING'.

ANY CONDUIT OR JUNCTION BOXES THAT ARE VISIBLE IN FRONT OF A PAINTED SURFACE SHALL BE PAINTED TO MATCH. THE COST FOR PAINTING CONDUIT AND JUNCTION BOXES SHALL BE INCLUDED IN THE COST OF THE 'STRUCTURAL STEEL'.

JACKING NOTES:

PROVISIONS FOR JACKING HAVE BEEN INCLUDED IN THIS DESIGN TO ALLOW FOR FUTURE MAINTENANCE.

THE JACKING STIFFENERS AND PIER CAPS ARE DESIGNED BASED ON THE COMBINED DEAD AND LIVE LOAD REACTIONS TABULATED IN THE MOMENT AND REACTION TABLES LISTED IN THESE PLANS. JACKING AND BEARING REPLACEMENT SHALL BE CONDUCTED IN A MANNER SUCH THAT THE SUPERSTRUCTURE WILL NOT BE DAMAGED. JACKS SHALL BE CENTERED UNDER THE WEB AND JACKING STIFFENER AND A STEEL PLATE SHALL BE PLACED BETWEEN THE TOP OF THE JACK AND THE BOTTOM OF THE FLANGE OF THE BEAM. STEEL PLATES SHALL BE PLACED UNDER JACKS BEARING DIRECTLY ON THE EXISTING SUBSTRUCTURE TO DISTRIBUTE THE JACKING LOAD AND PREVENT DAMAGE TO THE EXISTING CONCRETE.

DURING JACKING OPERATIONS, THE LIFTING OF THE STRUCTURE SHALL BE CONTROLLED SUCH THAT THE RELATIVE ELEVATION BETWEEN ADJACENT GIRDERS DOES NOT VARY BY MORE THAN $\frac{1}{8}$" FROM THEIR ORIGINAL ELEVATION DIFFERENTIAL. THE MAXIMUM ALLOWABLE VERTICAL JACKING DISPLACEMENT SHALL BE $\frac{1}{2}$" WITH RESPECT TO BEARINGS OF ADJACENT PIERS OR ABUTMENTS. IF ADDITIONAL JACKING HEIGHT IS REQUIRED TO FACILITATE BEARING REMOVAL, THE SUPERSTRUCTURE SHALL BE JACKED AT ADJACENT PIERS OR ABUTMENTS SUCH THAT THE MAXIMUM VERTICAL DIFFERENTIAL DISPLACEMENT BETWEEN ADJACENT PIERS OR ABUTMENTS DOES NOT EXCEED $\frac{1}{2}$". IF THE ENTIRE SUPERSTRUCTURE IS BEING RAISED A SIGNIFICANT AMOUNT TO MEET NEW PROFILE GRADE REQUIREMENTS, A SYNCHRONOUS LIFTING SYSTEM SHOULD BE USED TO CONTROL AND EQUALIZE INDIVIDUAL JACK PRESSURES TO INSURE THAT THE SUPERSTRUCTURE IS LIFTED UNIFORMLY WITHOUT EXCEEDING THE ABOVE STATED RELATIVE ELEVATION DIFFERENTIALS.

TRAFFIC SHALL NOT BE PERMITTED DIRECTLY OVER CRIBBED AREAS OF THE SUPERSTRUCTURE UNLESS THERE IS NO REASONABLE ALTERNATE METHOD OF ROUTING VEHICLES AND THE JACKING AND CRIBBING PLANS CONTAIN DETAILS WHICH WILL PROVIDE ADEQUATE HORIZONTAL AND VERTICAL STABILITY FOR THE SUPERSTRUCTURE. EFFECTS OF VIBRATIONS FROM TRAFFIC ON THE SUPERSTRUCTURE AND/OR NEAR THE SUBSTRUCTURE SHOULD BE CONSIDERED DURING JACKING AND BEARING REPLACEMENT OR REPAIRS. AT A MINIMUM, ANY CROSS FRAME BETWEEN ADJACENT JACKED AND UNJACKED GIRDERS SHALL BE DISCONNECTED TO REDUCE VIBRATION EFFECTS FROM TRAFFIC. VEHICLES SHALL NOT BE ALLOWED TO TRAVEL OVER UNCRIBBED AREAS OF THE STRUCTURE SUPPORTED ONLY BY HYDRAULIC JACKS.

WHEN JACKING AT EXPANSION JOINTS, BARRIER COVER PLATES AND RAILING SPLICES SHALL BE REMOVED TO PREVENT DAMAGE TO THE JOINTS. EXPANSION JOINTS SHOULD ALSO BE INSPECTED TO VERIFY THAT THE JOINT ASSEMBLY WILL NOT BE DAMAGED BY JACKING.

THE BRIDGE SHALL BE INSPECTED PRIOR TO JACKING TO VERIFY THAT ITEMS CONNECTED TO THE SUPERSTRUCTURE OR SUBSTRUCTURE WILL NOT BE DAMAGED DURING THE JACKING AND BEARING REPLACEMENT PROCEDURE.

THE SUPERSTRUCTURE SHALL ONLY BE JACKED AT THE LOCATIONS SHOWN ON THE DRAWINGS. IT SHALL BE THE RESPONSIBILITY OF THE CONTRACTOR PERFORMING THE JACKING TO SIZE AND DESIGN THE REQUIRED JACKING EQUIPMENT AND CRIBBING AND TO ESTABLISH THE PROCEDURE FOR JACKING AND BEARING REPLACEMENT OR REPAIRS SUBJECT TO APPROVAL OF THE ENGINEER. JACKS SHALL HAVE A MINIMUM SAFE LOAD CAPACITY OF 150% OF THE LOAD SPECIFIED IN THE JACKING LOAD TABLE.

PROVISIONS SHALL BE MADE TO ACCOUNT FOR THERMAL MOVEMENTS DURING THE PERIOD THAT THE STRUCTURE IS RESTING ON JACKS OR CRIBBING.

DESIGN STRESSES:

DESIGN STRESSES FOR THE FOLLOWING MATERIALS ARE IN ACCORDANCE WITH THE AASHTO LRFD BRIDGE DESIGN SPECIFICATIONS, 5TH ED., SERIES OF 2010, EXCEPT AS NOTED IN THE CURRENT IOWA BRIDGE DESIGN MANUAL.

REINFORCING STEEL IN ACCORDANCE WITH LRFD AASHTO SECTION 5, GRADE 60.
CONCRETE IN ACCORDANCE WITH LRFD AASHTO SECTION 5, f'c = 3,500 PSI
STRUCTURAL STEEL IN ACCORDANCE WITH LRFD AASHTO SECTION 6. ASTM A709 GRADE 36, GRADE 50, GRADE 50W, AND GRADE 70W (AASHTO M270 GRADE 36, GRADE 50, GRADE 50W AND GRADE 70W).
FATIGUE CYCLES BASED ON INFINITE FATIGUE.
JACKING STIFFENER LOCATIONS ARE DESIGNED FOR THE SAME REACTIONS AS TABULATED IN THE GIRDER REACTION TABLES.

SPECIFICATIONS:

DESIGN: AASHTO LRFD 5TH ED., SERIES OF 2010, EXCEPT AS NOTED IN THE CURRENT IOWA BRIDGE DESIGN MANUAL.

CONSTRUCTION: IOWA DEPARTMENT OF TRANSPORTATION STANDARD SPECIFICATIONS FOR HIGHWAY AND BRIDGE CONSTRUCTION, SERIES 2015, PLUS APPLICABLE GENERAL SUPPLEMENTAL SPECIFICATIONS, DEVELOPMENTAL SPECIFICATIONS, SUPPLEMENTAL SPECIFICATIONS AND SPECIAL PROVISIONS SHALL APPLY TO CONSTRUCTION WORK ON THIS PROJECT, INCLUDING SPECIAL PROVISIONS FOR WORK ON RAILROAD RIGHT-OF-WAY (DM&E).

THE SPECIAL PROVISION FOR FLUOROPOLYMER PAINT FOR STRUCTURAL STEEL SHALL APPLY TO WORK ON THIS PROJECT.

THE DEVELOPMENTAL SPECIFICATION, DS-15033, FOR HIGH PERFORMANCE CONCRETE FOR STRUCTURES SHALL APPLY TO WORK ON THIS PROJECT.
THE DEVELOPMENTAL SPECIFICATION, DS-15017, FOR "ADHESIVE-BONDED ANCHORS AND DOWELS FOR TRAFFIC RAILINGS", SHALL APPLY TO WORK ON THIS PROJECT.
THE DEVELOPMENTAL SPECIFICATION, DS-15032, "DEVELOPMENTAL SPECIFICATIONS FOR MASS CONCRETE - CONTROL OF HEAT OF HYDRATION" SHALL APPLY TO WORK ON THIS PROJECT.
THE SPECIAL PROVISIONS FOR HIGH PERFORMANCE SELF CONSOLIDATING CONCRETE (HP-SCC) SHALL APPLY TO WORK ON THIS PROJECT.

THE SPECIAL PROVISIONS FOR ANTI-GRAFFITI COATING SHALL APPLY TO WORK ON THIS PROJECT.

COORDINATION REQUIREMENTS WITH MIDAMERICAN ENERGY COMPANY:

THE BRIDGE CONSTRUCTION IS IN CLOSE PROXIMITY TO TWO EXISTING 69,000 VOLT (69 KV) OVERHEAD ELECTRIC TRANSMISSION LINES OWNED BY MIDAMERICAN ENERGY COMPANY. THESE OVERHEAD 69 KV ELECTRIC LINES CROSS THE PROJECT AREA ON A DOUBLE CIRCUIT TWO-POLE STRUCTURE NEAR STATION 6788. THE EXISTING TWO-POLE 69 KV ELECTRIC LINE STRUCTURE IN THE PROJECT AREA SUPPORTING THESE ELECTRIC LINES WILL BE PERMANENTLY MOVED EASTERLY TO A LOCATION OUTSIDE THE IMMEDIATE WORK AREA PRIOR TO THE START OF WORK. HOWEVER, SINCE THESE 69 KV ELECTRIC LINES ARE AN IMPORTANT PART OF THE MIDAMERICAN ENERGY COMPANY ELECTRICAL TRANSMISSION NETWORK, THESE OVERHEAD ELECTRIC LINE CROSSINGS CANNOT BE CONTINUOUSLY DE-ENERGIZED OR RELOCATED. THE CONTRACTOR SHALL BE REQUIRED TO CONFIGURE ITS WORK TO AVOID IMPACTING THESE ELECTRIC LINES, OR THE OPERATION THEREOF, EXCEPT AS PROVIDED BELOW.
CONTRACTOR SAFETY
PLEASE NOTE THAT THESE ELECTRIC LINES ARE CONTINUOUSLY ENERGIZED. THE CONDUCTORS ON THESE ELECTRIC LINES ARE BARE AND UNINSULATED AND CONTACT WITH THESE ELECTRIC LINES CAN CAUSE SERIOUS INJURY OR DEATH. ALL PEOPLE INVOLVED WITH ANY ACTIVITY WITHIN THE VICINITY OF THESE ELECTRIC LINES MUST BE AWARE AND REMAIN AWARE OF THE HAZARDS OF WORKING AROUND THESE ELECTRIC LINES, INCLUDING MAINTAINING PROPER SAFETY CLEARANCES FROM THESE ELECTRIC LINES.
69 KV ELECTRIC LINE CLEARANCES
THE 69 KV ELECTRIC LINES WILL PROVIDE APPROXIMATELY 30 FEET OF TOTAL VERTICAL CLEARANCE ABOVE THE EXISTING BRIDGE AND APPROXIMATELY 61 FEET OF TOTAL VERTICAL CLEARANCE ABOVE THE EXISTING GROUND, AT MAXIMUM SAG. FOLLOWING THE RELOCATION OF THE EXISTING TWO-POLE 69 KV ELECTRIC LINE STRUCTURE IN THE PROJECT AREA, THE VERTICAL CLEARANCE ABOVE THE DECK OF THE NEW BRIDGE WILL BE APPROXIMATELY 29 FEET. THE CONTRACTOR SHALL NOT WORK WITHIN THE MINIMUM DISTANCE SPECIFIED BY THE OCCUPATIONAL SAFETY AND HEALTH ADMINISTRATION (OSHA) OF ANY CONDUCTOR WHILE THE 69 KV ELECTRIC LINES ARE ENERGIZED. WHEN THE 69 KV ELECTRIC LINES ARE DE-ENERGIZED, THE CONTRACTOR SHALL NOT WORK WITHIN TWO FEET OF ANY ELECTRIC LINE CONDUCTOR.
69 KV ELECTRIC LINE OUTAGES
THE CONTRACTOR MAY PURSUE INTERMITTENT 69 KV ELECTRIC LINE OUTAGES WITH MIDAMERICAN ENERGY COMPANY, BUT MUST RECOGNIZE THAT A LONGER CONTINUOUS ELECTRIC LINE OUTAGE WILL NOT BE POSSIBLE. THE CONTRACTOR SHALL COORDINATE ALL NEEDED 69 KV ELECTRIC LINE OUTAGES WITH MIDAMERICAN ENERGY COMPANY TO MAINTAIN THE PROJECT CONSTRUCTION SCHEDULE. THE MIDAMERICAN ENERGY COMPANY ELECTRIC SYSTEM CONTROL COORDINATOR REQUIRES A MINIMUM OF 14 CALENDAR DAYS IN ADVANCE OF ANY REQUEST FOR A 69 KV ELECTRIC LINE OUTAGE. THE CONTRACTOR IS REQUIRED TO PLAN AND SCHEDULE INTERMITTENT 69 KV ELECTRIC LINE OUTAGES DIRECTLY WITH MIDAMERICAN ENERGY COMPANY. WITHOUT EARLY COORDINATION WITH MIDAMERICAN ENERGY COMPANY, THE INTERMITTENT 69 KV ELECTRIC LINE OUTAGE REQUEST WILL NOT BE GRANTED. MIDAMERICAN ENERGY COMPANY RESERVES THE RIGHT TO CANCEL ANY PREVIOUSLY SCHEDULED 69 KV ELECTRIC LINE OUTAGES DUE TO UNFORESEEN CONDITIONS OR STORMS THAT THREATEN THE RELIABILITY OF THE ELECTRIC SYSTEM, AND WILL GIVE AS MUCH ADVANCED NOTICE AS POSSIBLE TO THE CONTRACTOR. TO COORDINATE ALL 69 KV ELECTRIC LINE OUTAGES, THE CONTRACTOR SHALL CALL JAMES LEWIS AT PHONE NUMBER (563) 333-8927 AT MIDAMERICAN ENERGY COMPANY TO REQUEST AND COORDINATE THESE ELECTRIC LINE OUTAGES.
DE-ENERGIZING THE 69 KV ELECTRIC LINES BETWEEN THE TIME PERIOD OF MAY 15 THROUGH SEPTEMBER 15 MAY BE RESTRICTED. MIDAMERICAN ENERGY COMPANY RESERVES THE RIGHT TO RE-ENERGIZE THE 69 KV ELECTRIC LINES AT ANY TIME DURING A 69 KV ELECTRIC LINE OUTAGE BY PROVIDING A TWO-HOUR NOTICE TO THE CONTRACTOR.

LIST RAILROAD SPECIAL PROVISION WHEN AVAILABLE LATER.

DESIGN FOR VARIABLE SKEW (L.A.)

2271'-6 x VARI. CONTINUOUS WELDED GIRDER BRIDGE-EBL W/14' BIKE TRAIL

138'-10 & 151'-0$\frac{7}{8}$ END SPANS MULTIPLE LENGTH INTERIOR SPANS

GENERAL NOTES

STA. 6792+60.93 - 52' LEFT ℄ I-74 OCTOBER, 2015

SCOTT COUNTY

IOWA DEPARTMENT OF TRANSPORTATION - HIGHWAY DIVISION

DESIGN SHEET NO. 3 OF 282 FILE NO. 30253 DESIGN NO. 3408

BENCH MARK NO. 500: STA. 6781+18.92 LT. 161.19'
ELEV. 575.797, CHISELED "X" IN BOLT E. SIDE
CONCRETE STRUCTURE

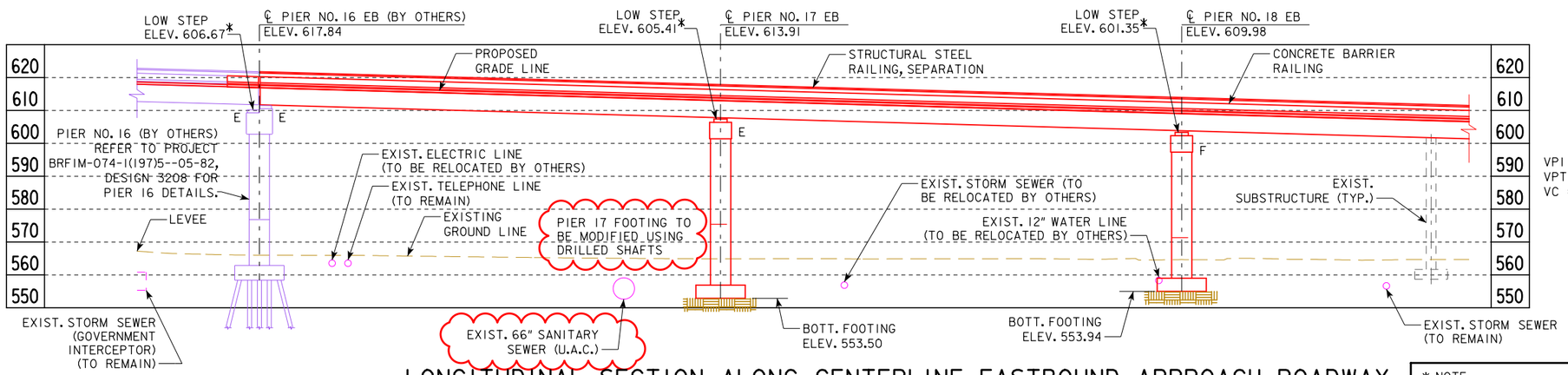

LONGITUDINAL SECTION ALONG CENTERLINE EASTBOUND APPROACH ROADWAY

NOTE: ELEVATIONS SHOWN ARE AT CENTERLINE EASTBOUND APPROACH ROADWAY.
PIERS NOT SHOWN SKEWED FOR CLARITY.

PROPOSED PROFILE GRADE I-74 EB

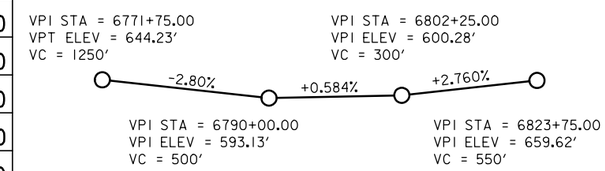

* NOTE:
LOW STEP ELEVATIONS ARE DEPENDENT ON FINAL BEARING HEIGHTS - SEE DISC BEARING NOTES ON DES. SH. 156

LOCATION

I-74 EASTBOUND VIADUCT OVER
DM&E RAILROAD, EXIST. GILBERT
ST., PROPOSED U.S. 67 AND
PROPOSED MISSISSIPPI BLVD.
T-78 N R-4 E
SECTIONS 28, 29 & 33
DAVENPORT TOWNSHIP
SCOTT COUNTY
CITY OF BETTENDORF
FRA NO. 865645Y
IOWA CROSSING NO. 9712
FHWA NO. 604081
LATITUDE 41.524959
LONGITUDE -90.513193

NOTE:
E - DENOTES "EXPANSION BEARING"
F - DENTOES "FIXED BEARING"

DECK SLAB AND BARRIER RAIL CONCRETE DIRECTLY SOUTH OF PIER 16 EXPANSION JT. TO BE PLACED IN THIS CONTRACT. REFER TO PROJECT BRFIM-074-1(197)5-05-82, DESIGN 3208 FOR SLAB DETAILS AT PIER 16.

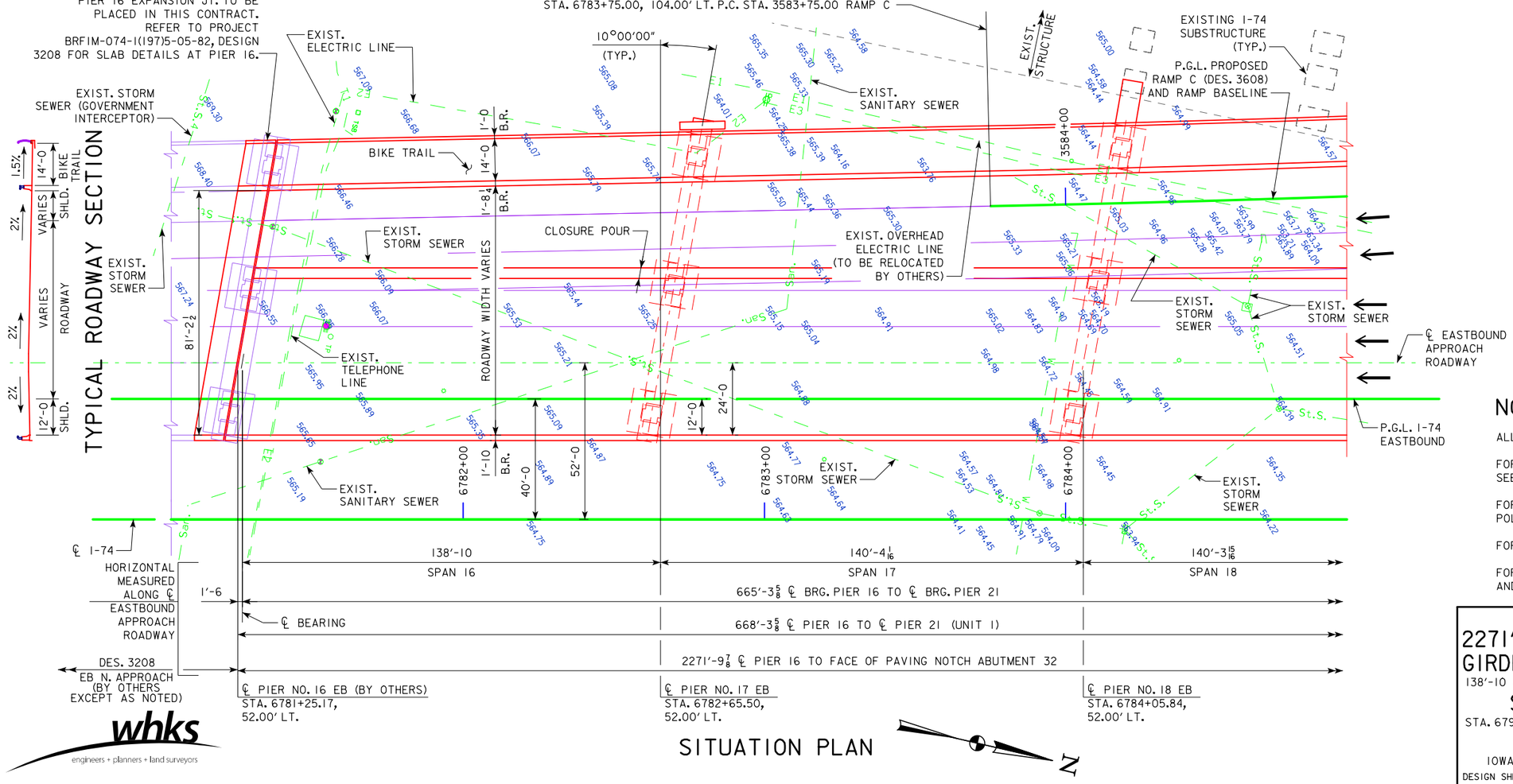

TYPICAL ROADWAY SECTION

SITUATION PLAN

TRAFFIC ESTIMATE

UNIT 1

2015	AADT	44,020	V.P.D.
2035	AADT	52,160	V.P.D.
2035	DHV	4,850	V.P.H.
TRUCKS		5	%

NOTES:

ALL DIMENSIONS ARE IN FEET.

FOR LOCATIONS OF DECK DRAINS, SEE DESIGN SHEET 268.

FOR LOCATIONS AND DETAILS OF LIGHT POLES, SEE DESIGN SHEETS 225.

FOR LOCATIONS OF SOIL BORINGS, SEE DESIGN SHEET SPS.1.

FOR RAMP C HORIZONTAL CURVE DATA AND PROFILE GRADE INFORMATION, SEE DESIGN SHEET 5.

DESIGN FOR VARIABLE SKEW (L.A.)

2271'-6 x VARI. CONTINUOUS WELDED GIRDER BRIDGE-EBL W/14' BIKE TRAIL

138'-10 & 151'-0 7/8 END SPANS MULTIPLE LENGTH INTERIOR SPANS

SITUATION PLAN - UNIT 1

STA. 6792+60.93 - 52' LEFT ℄ I-74 OCTOBER, 2015

SCOTT COUNTY

IOWA DEPARTMENT OF TRANSPORTATION - HIGHWAY DIVISION

DESIGN SHEET NO. 4 OF 282 FILE NO. 30253 DESIGN NO. 3408

whks engineers + planners + land surveyors

DESIGN TEAM JP / LG / RE	SCOTT COUNTY	PROJECT NUMBER BRFIM-074-1(200)5--05-82	SHEET NUMBER 5

BENCH MARK NO. 500: STA. 6781+18.92 LT. 161.19'
ELEV. 575.797, CHISELED "X" IN BOLT E. SIDE
CONCRETE STRUCTURE

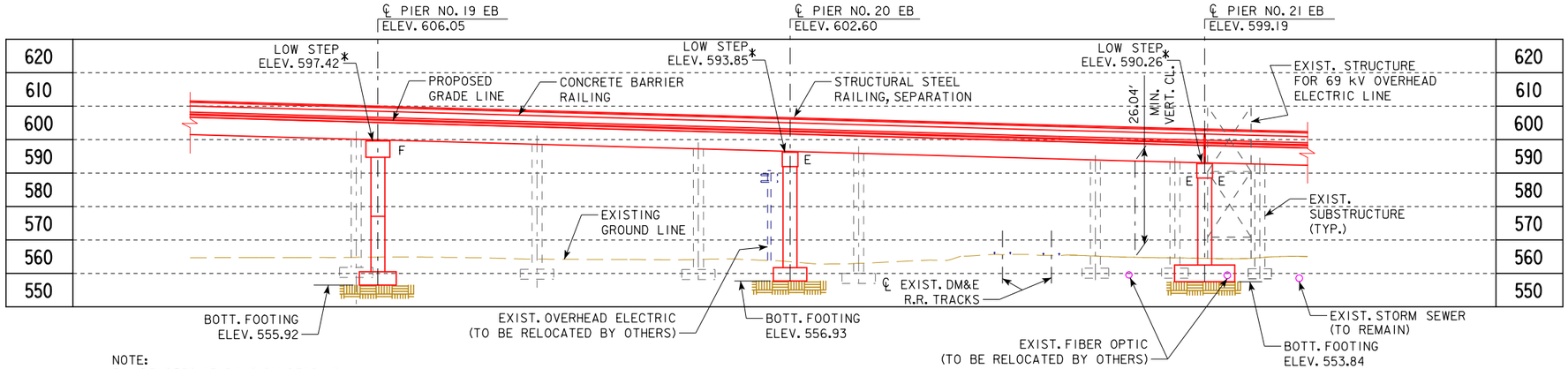

NOTE:
E - DENOTES "EXPANSION BEARING"
F - DENTOES "FIXED BEARING"

LONGITUDINAL SECTION ALONG CENTERLINE EASTBOUND APPROACH ROADWAY

MINIMUM VERTICAL CLEARANCE OVER DM&E R.R.

OVERHEAD STATION = 6787+89.67, 146.46' LT.
OVERHEAD ELEVATION = 597.48'
DEPTH OF SUPERSTRUCTURE = 5.93'
RAILROAD ELEVATION = 565.51'
MINIMUM VERTICAL CLEARANCE = 26.04'

PROPOSED PROFILE GRADE U.S. 67 RAMP C

STA = 3587+98.76
BEGIN RAMP C CONST.
ELEV = 597.61'

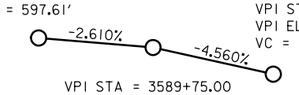

VPI STA = 3594+50.00
VPI ELEV = 571.35'
VC = 100'

VPI STA = 3589+75.00
VPI ELEV = 593.01'
VC = 350'

NOTE:
ELEVATIONS SHOWN ARE AT CENTERLINE EASTBOUND APPROACH ROADWAY. PIERS NOT SHOWN SKEWED FOR CLARITY.

* NOTE:
LOW STEP ELEVATIONS ARE DEPENDENT ON FINAL BEARING HEIGHTS - SEE DISC BEARING NOTES ON DES. SH. 156

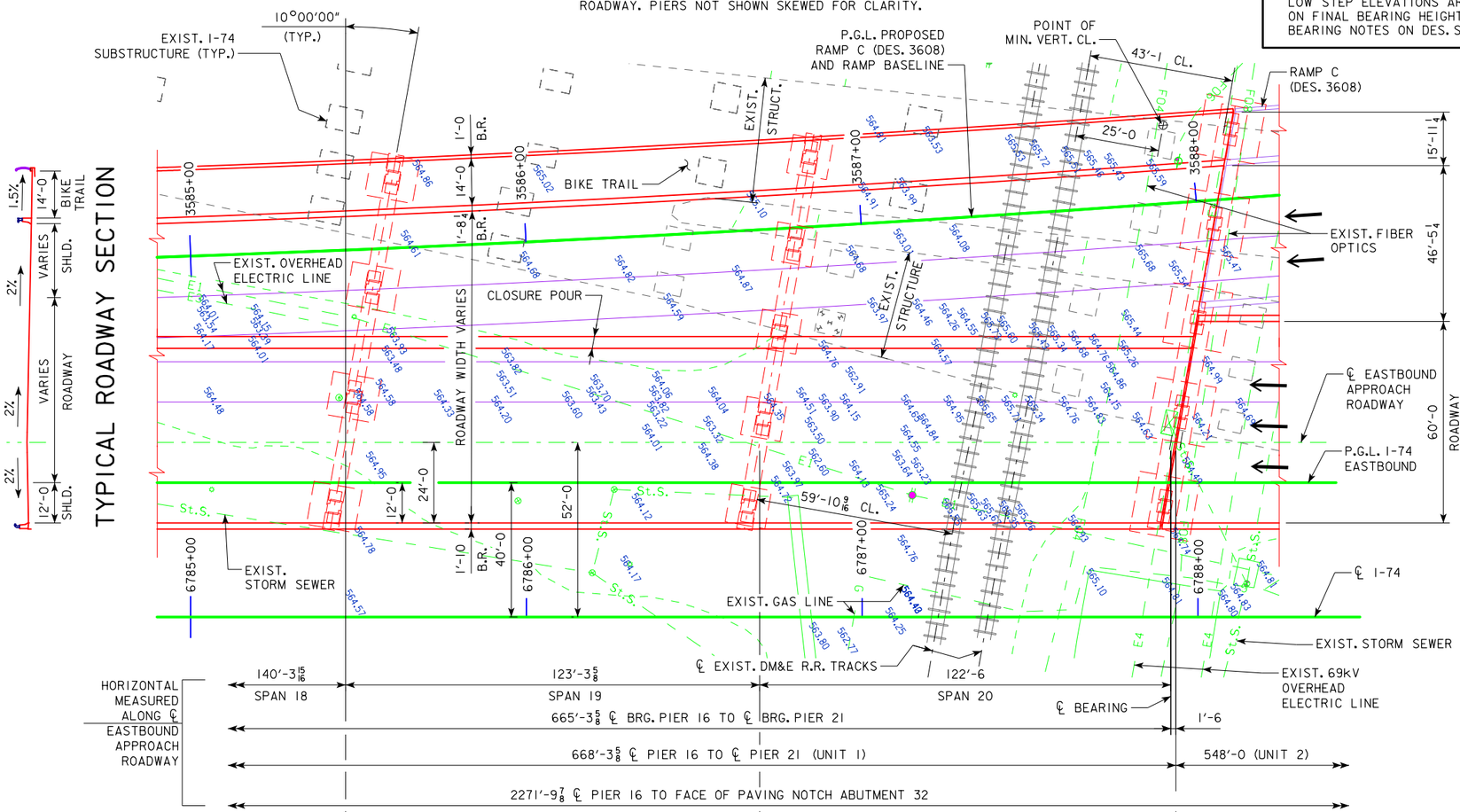

SITUATION PLAN

U.S. 67 RAMP C CURVE DATA

P.I. STA. = 3586+05.19
Δ = 03° 17' 46.82" LT
D = 00° 42' 58.31"
T = 230.19'
L = 460.26'
E = 3.31
R = 8000.00'
e = N.C.
L = NA
x = NA
m = NA
P.C. STA. = 3583+75.00
P.T. STA. = 3588+35.26

NOTES:

ALL DIMENSIONS ARE IN FEET.

FOR I-74 EB ROADWAY PROFILE GRADE INFORMATION, NOTES, LOCATION AND TRAFFIC ESTIMATE SEE DESIGN SHEET 4.

whks
engineers + planners + land surveyors

DESIGN FOR VARIABLE SKEW (L.A.)

2271'-6 x VARI. CONTINUOUS WELDED GIRDER BRIDGE-EBL W/14' BIKE TRAIL

138'-10 & 151'-0 7/8 END SPANS MULTIPLE LENGTH INTERIOR SPANS

SITUATION PLAN - UNIT 1

STA. 6792+60.93 - 52' LEFT ℄ I-74 OCTOBER, 2015

SCOTT COUNTY

IOWA DEPARTMENT OF TRANSPORTATION - HIGHWAY DIVISION

DESIGN SHEET NO. 5 OF 282 FILE NO. 30253 DESIGN NO. 3408

DESIGN TEAM JP / LG / RE	SCOTT COUNTY	PROJECT NUMBER BRFIM-074-1(200)5--05-82	SHEET NUMBER 6

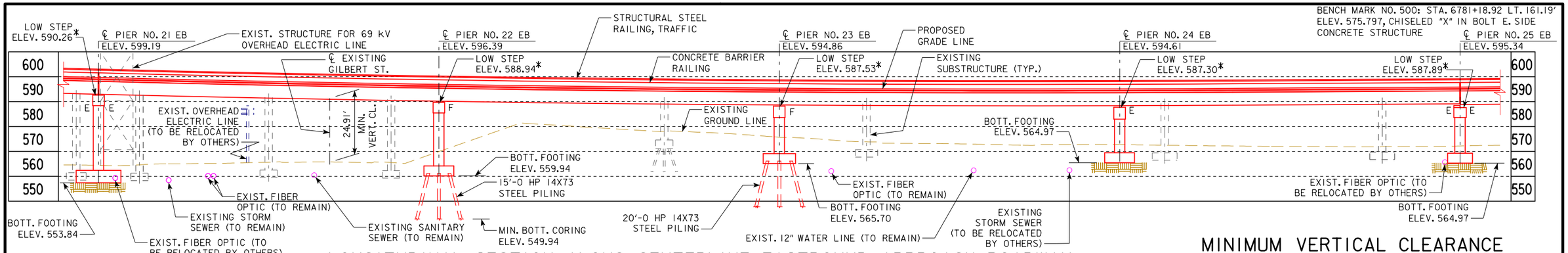

LONGITUDINAL SECTION ALONG CENTERLINE EASTBOUND APPROACH ROADWAY

NOTE: ELEVATIONS SHOWN ARE AT CENTERLINE EASTBOUND APPROACH ROADWAY. PIERS NOT SHOWN SKEWED FOR CLARITY.

NOTE:
E - DENOTES "EXPANSION BEARING"
F - DENTOES "FIXED BEARING"

* NOTE:
LOW STEP ELEVATIONS ARE DEPENDENT ON FINAL BEARING HEIGHTS - SEE DISC BEARING NOTES ON DES. SH. 156

MINIMUM VERTICAL CLEARANCE OVER EXISTING GILBERT ST.

OVERHEAD STATION = 6788+91.74, 86.50' LT.
OVERHEAD ELEVATION = 596.39'
DEPTH OF SUPERSTRUCTURE = 5.93'
UNDERPASS ELEVATION = 565.55'
MINIMUM VERTICAL CLEARANCE = 24.91'

EXISTING PROFILE GRADE GILBERT ST.

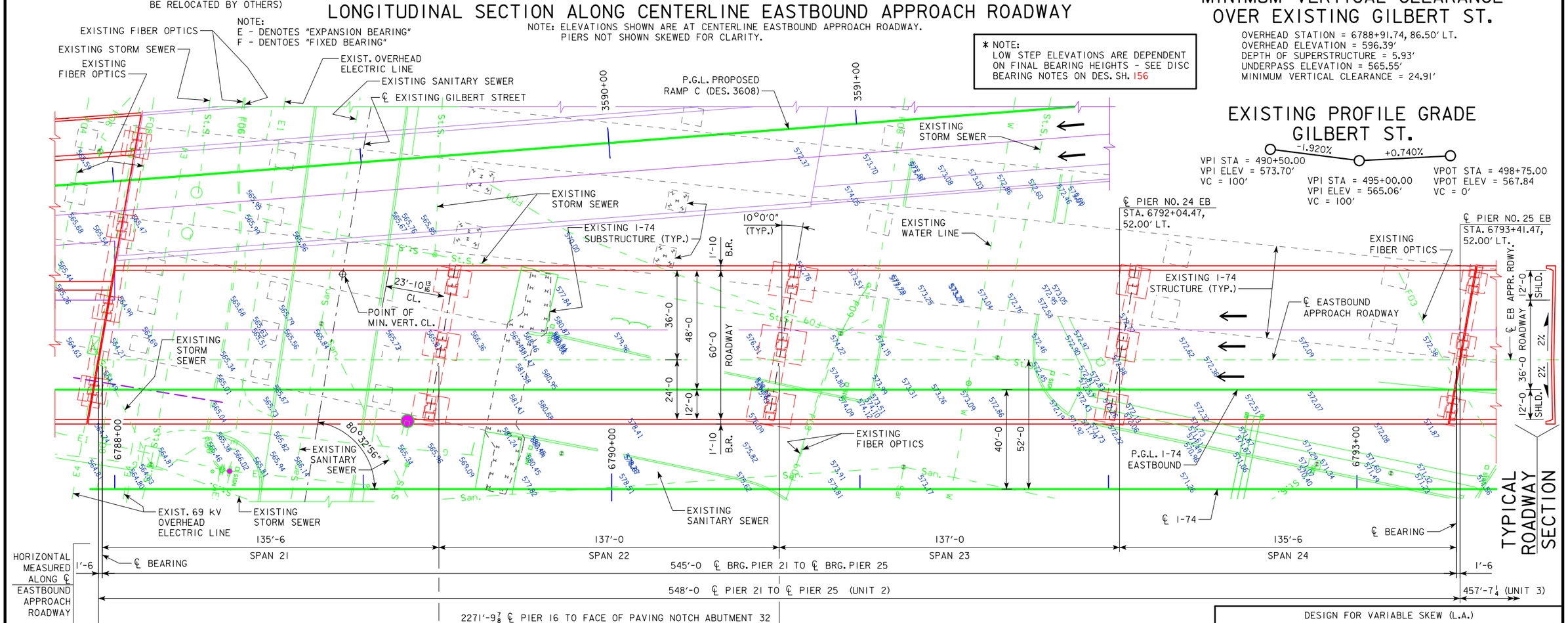

SITUATION PLAN

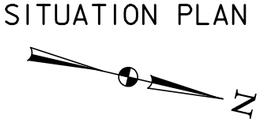

TRAFFIC ESTIMATE
UNIT 2

2015	AADT	26,470	V.P.D.
2035	AADT	32,800	V.P.D.
2035	DHV	3,250	V.P.H.
TRUCKS		5	%

whks
engineers + planners + land surveyors

NOTES:

ALL DIMENSIONS ARE IN FEET.

FOR I-74 EB ROADWAY PROFILE GRADE INFORMATION, NOTES, AND LOCATION SEE DESIGN SHEET 4.

FOR LOCATIONS OF SOIL BORINGS, SEE DESIGN SHEET SPS.3.

DESIGN FOR VARIABLE SKEW (L.A.)

2271'-6 x VARI. CONTINUOUS WELDED GIRDER BRIDGE-EBL W/14' BIKE TRAIL

138'-10 & 151'-0 7/8 END SPANS MULTIPLE LENGTH INTERIOR SPANS

SITUATION PLAN - UNIT 2

STA. 6792+60.93 - 52' LEFT ℄ I-74 OCTOBER, 2015

SCOTT COUNTY

IOWA DEPARTMENT OF TRANSPORTATION - HIGHWAY DIVISION

DESIGN SHEET NO. 6 OF 282 FILE NO. 30253 DESIGN NO. 3408

DESIGN TEAM JP / LG / RE | SCOTT COUNTY | PROJECT NUMBER BRFIM-074-1(200)5--05-82 | SHEET NUMBER 7

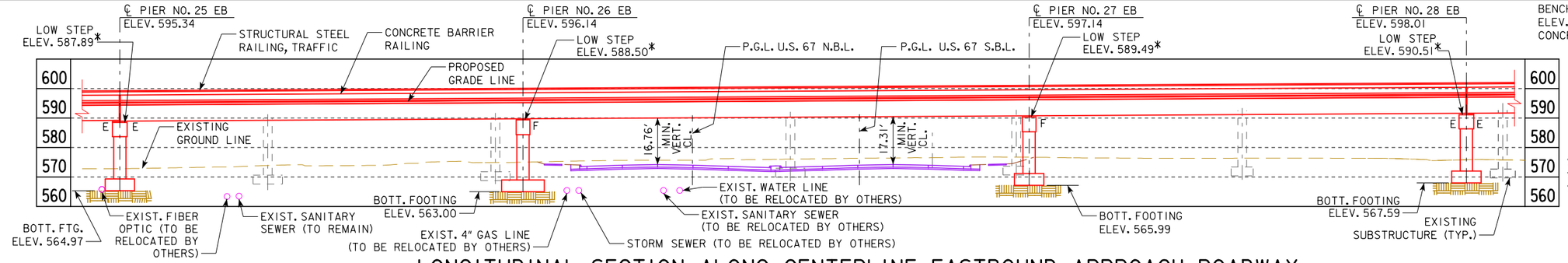

BENCH MARK NO. 500: STA. 6781+18.92 LT. 161.19'
ELEV. 575.797, CHISELED "X" IN BOLT E. SIDE
CONCRETE STRUCTURE

LONGITUDINAL SECTION ALONG CENTERLINE EASTBOUND APPROACH ROADWAY

PROPOSED PROFILE GRADE U.S. 67 NB

+0.400% -0.400%

VPI STA=1610+25
VPI ELEV=572.88'
VC=100'

VPI STA=1607+75
VPI ELEV=571.88'
VC=100'

VPI STA=1613+25
VPI ELEV=571.68'
VC=100'

PROPOSED PROFILE GRADE U.S. 67 SB

+0.400% -0.440%

VPI STA=207+25
VPI ELEV=572.90'
VC=100'

VPI STA=204+00
VPI ELEV=571.60'
VC=100'

VPI STA=210+50
VPI ELEV=571.47'
VC=100'

* NOTE:
LOW STEP ELEVATIONS ARE DEPENDENT ON FINAL BEARING HEIGHTS - SEE DISC BEARING NOTES ON DES. SH. 156

NOTE:
E - DENOTES "EXPANSION BEARING"
F - DENTOES "FIXED BEARING"

NOTE: ELEVATIONS SHOWN ARE AT CENTERLINE EASTBOUND APPROACH ROADWAY. PIERS NOT SHOWN SKEWED FOR CLARITY.

℄ I-74 CURVE DATA

P.I. STA. = 6801+41.31
Δ = 03° 50' 58.23" LT
D = 00° 24' 33.32"
T = 470.48'
L = 940.61'
E = 7.90
R = 14000.00'
e = N.C.
P.C. STA. = 6796+70.83
P.T. STA. = 6806+11.44

TRAFFIC ESTIMATE UNIT 3			
2015	AADT	26,470	V.P.D.
2035	AADT	32,800	V.P.D.
2035	DHV	3,250	V.P.H.
TRUCKS		5	%

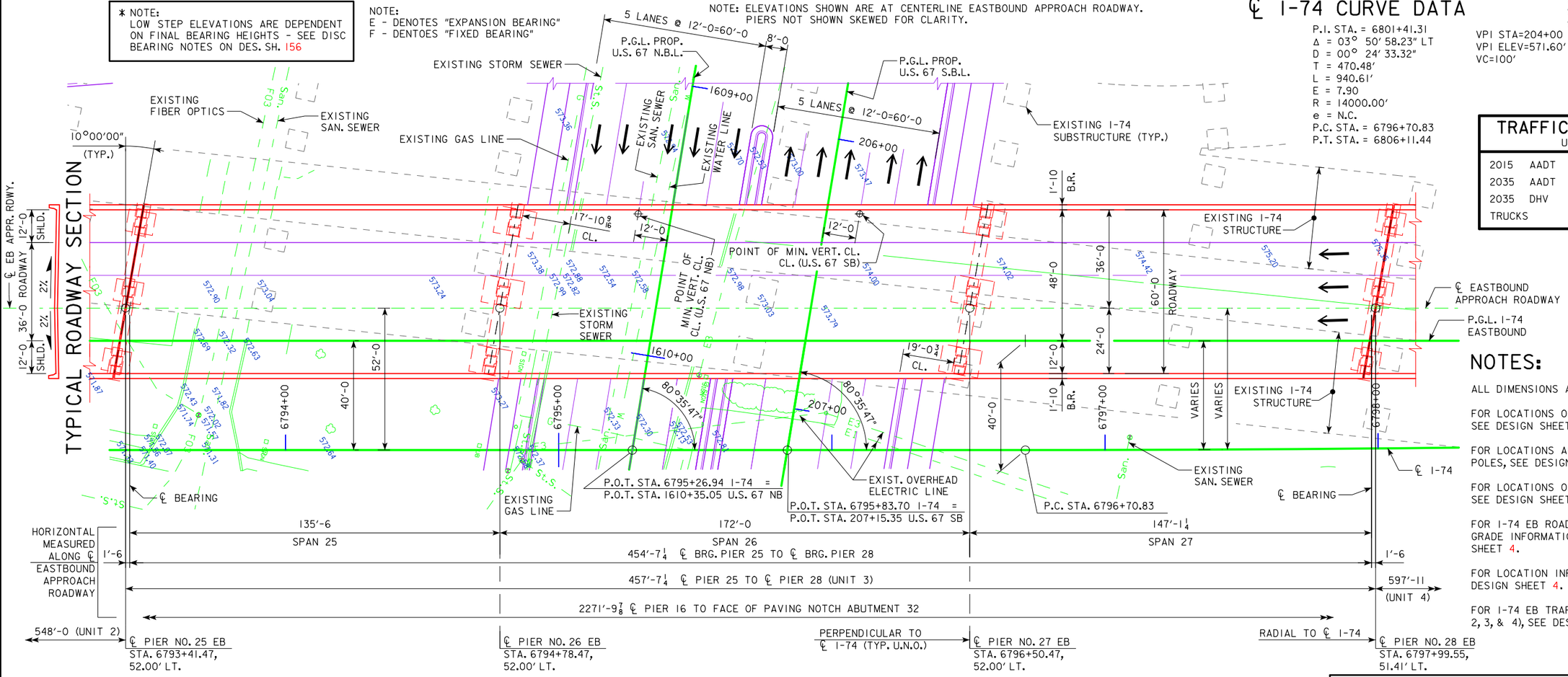

NOTES:

ALL DIMENSIONS ARE IN FEET.

FOR LOCATIONS OF DECK DRAINS, SEE DESIGN SHEET 268.

FOR LOCATIONS AND DETAILS OF LIGHT POLES, SEE DESIGN SHEETS 225.

FOR LOCATIONS OF SOIL BORINGS, SEE DESIGN SHEET SPS.4.

FOR I-74 EB ROADWAY PROFILE GRADE INFORMATION, SEE DESIGN SHEET 4.

FOR LOCATION INFORMATION, SEE DESIGN SHEET 4.

FOR I-74 EB TRAFFIC ESTIMATE (UNITS 2, 3, & 4), SEE DESIGN SHEETS 6 THRU 8 .

SITUATION PLAN

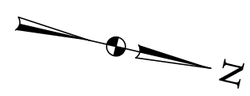

MINIMUM VERTICAL CLEARANCE OVER U.S. 67 NB

OVERHEAD STATION = 6795+29.10, 86.50' LT.
OVERHEAD ELEVATION = 595.77'
DEPTH OF SUPERSTRUCTURE = 6.19'
UNDERPASS STATION = 1609+49.36, 12.00' RT.
UNDERPASS ELEVATION = 572.82'
MINIMUM VERTICAL CLEARANCE = 16.76'

MINIMUM VERTICAL CLEARANCE OVER U.S. 67 SB

OVERHEAD STATION = 6796+10.19, 86.50' LT.
OVERHEAD ELEVATION = 596.24'
DEPTH OF SUPERSTRUCTURE = 6.19'
UNDERPASS STATION = 206+25.69, 12.00' LT.
UNDERPASS ELEVATION = 572.74'
MINIMUM VERTICAL CLEARANCE = 17.31'

whks
engineers + planners + land surveyors

DESIGN FOR VARIABLE SKEW (L.A.)

2271'-6 x VARI. CONTINUOUS WELDED GIRDER BRIDGE-EBL W/14' BIKE TRAIL

138'-10 & 151'-0 7/8 END SPANS MULTIPLE LENGTH INTERIOR SPANS

SITUATION PLAN - UNIT 3

STA. 6792+60.93 - 52' LEFT ℄ I-74 OCTOBER, 2015

SCOTT COUNTY

IOWA DEPARTMENT OF TRANSPORTATION - HIGHWAY DIVISION

DESIGN SHEET NO. 7 OF 282 FILE NO. 30253 DESIGN NO. 3408

BENCH MARK NO. 500: STA. 6781+18.92 LT. 161.19'
ELEV. 575.797, CHISELED "X" IN BOLT E. SIDE
CONCRETE STRUCTURE

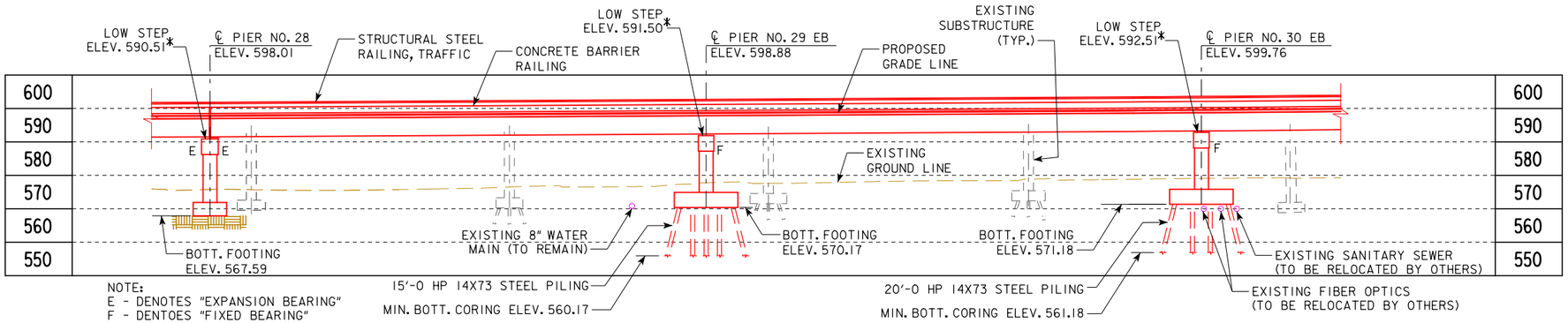

NOTE:
E - DENOTES "EXPANSION BEARING"
F - DENTOES "FIXED BEARING"

LONGITUDINAL SECTION ALONG CENTERLINE EASTBOUND APPROACH ROADWAY

NOTE: ELEVATIONS SHOWN ARE AT CENTERLINE EASTBOUND APPROACH ROADWAY.
PIERS NOT SHOWN SKEWED FOR CLARITY.

* NOTE:
LOW STEP ELEVATIONS ARE DEPENDENT ON FINAL BEARING HEIGHTS - SEE DISC BEARING NOTES ON DES. SH. 156

I-74 EB CURVE DATA

P.I. STA. = 26805+14.75
Δ = 03° 50' 58.22" LT
D = 00° 24' 33.32"
T = 470.48'
L = 940.61'
E = 7.90
R = 14000.00'
e = N.C.
P.C. STA. = 26800+44.27
P.T. STA. = 26809+84.88

TRAFFIC ESTIMATE

UNIT 4

2015	AADT	26,470	V.P.D.
2035	AADT	32,800	V.P.D.
2035	DHV	3,250	V.P.H.
TRUCKS		5	%

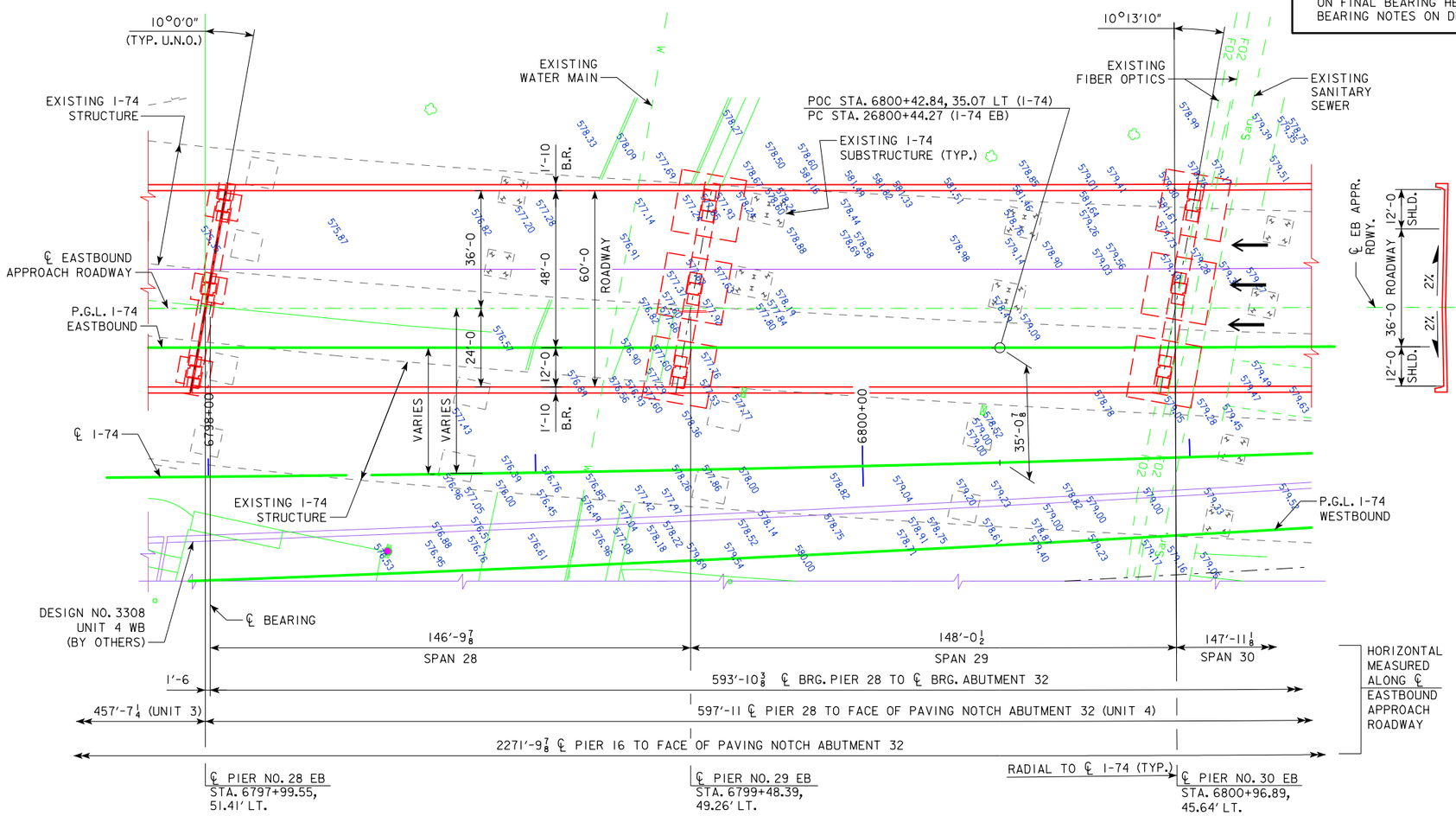

SITUATION PLAN

TYPICAL ROADWAY SECTION

NOTES:

ALL DIMENSIONS ARE IN FEET.

FOR LOCATIONS OF DECK DRAINS, SEE DESIGN SHEET 268.

FOR LOCATIONS AND DETAILS OF LIGHT POLES, SEE DESIGN SHEETS 225.

FOR LOCATIONS OF SOIL BORINGS, SEE DESIGN SHEET SPS.5.

FOR I-74 EB ROADWAY PROFILE GRADE INFORMATION, SEE DESIGN SHEET 4.

FOR LOCATION INFORMATION, SEE DESIGN SHEET 4.

FOR ℄ I-74 HORIZONTAL CURVE DATA, SEE DESIGN SHEET 7.

FOR I-74 EB TRAFFIC ESTIMATE (UNITS 2, 3, & 4), SEE DESIGN SHEETS 6 THRU 8 .

whks
engineers + planners + land surveyors

DESIGN FOR VARIABLE SKEW (L.A.)

2271'-6 x VARI. CONTINUOUS WELDED GIRDER BRIDGE-EBL W/14' BIKE TRAIL

138'-10 & 151'-0 7/8 END SPANS MULTIPLE LENGTH INTERIOR SPANS

SITUATION PLAN - UNIT 4

STA. 6792+60.93 - 52' LEFT ℄ I-74 OCTOBER, 2015

SCOTT COUNTY

IOWA DEPARTMENT OF TRANSPORTATION - HIGHWAY DIVISION

DESIGN SHEET NO. 8 OF 282 FILE NO. 30253 DESIGN NO. 3408

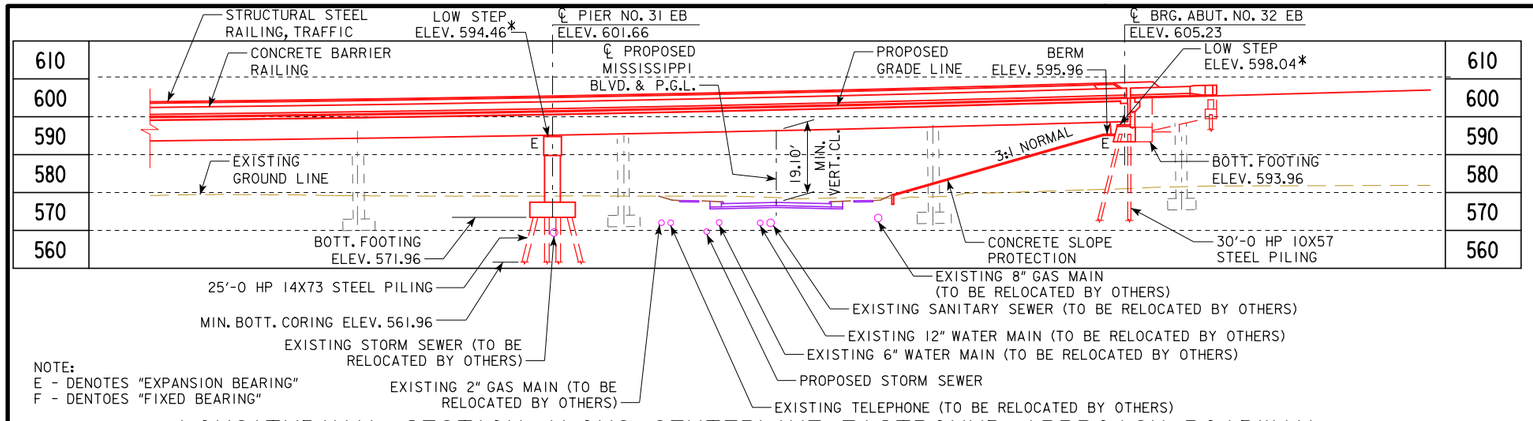

NOTE:
E - DENOTES "EXPANSION BEARING"
F - DENTOES "FIXED BEARING"

LONGITUDINAL SECTION ALONG CENTERLINE EASTBOUND APPROACH ROADWAY

NOTE: ELEVATIONS SHOWN ARE AT CENTERLINE EASTBOUND APPROACH ROADWAY.
PIERS NOT SHOWN SKEWED FOR CLARITY.

BENCH MARK NO. 500: STA. 6781+18.92 LT. 161.19'
ELEV. 575.797, CHISELED "X" IN BOLT E. SIDE
CONCRETE STRUCTURE

PROPOSED PROFILE GRADE MISSISSIPPI BLVD.

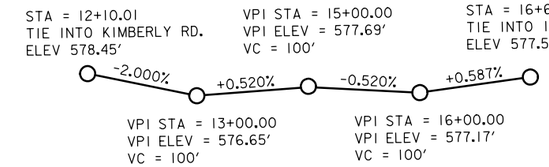

DESIGN DATA URBAN MISSISSIPPI BLVD.			
2035	AADT	7,400	V.P.D.

BERM SLOPE LOCATION TABLE

	EB ABUTMENT NO. 32		
	STATION	OFFSET	ELEV.
A1	6803+45.99	81.46' LT	577.89
A2	6803+35.92	39.30' LT	577.73
A3	6803+29.60	9.04' LT	577.90
B1	6803+99.50	80.04' LT	595.71
B2	6803+91.06	37.83' LT	595.71
B3	6803+84.10	7.59' LT	595.71
W1	6804+30.00	79.23' LT	605.31
W2	6804+15.34	6.76' LT	605.14

* NOTE:
LOW STEP ELEVATIONS ARE DEPENDENT ON FINAL BEARING HEIGHTS - SEE DISC BEARING NOTES ON DES. SH. 156

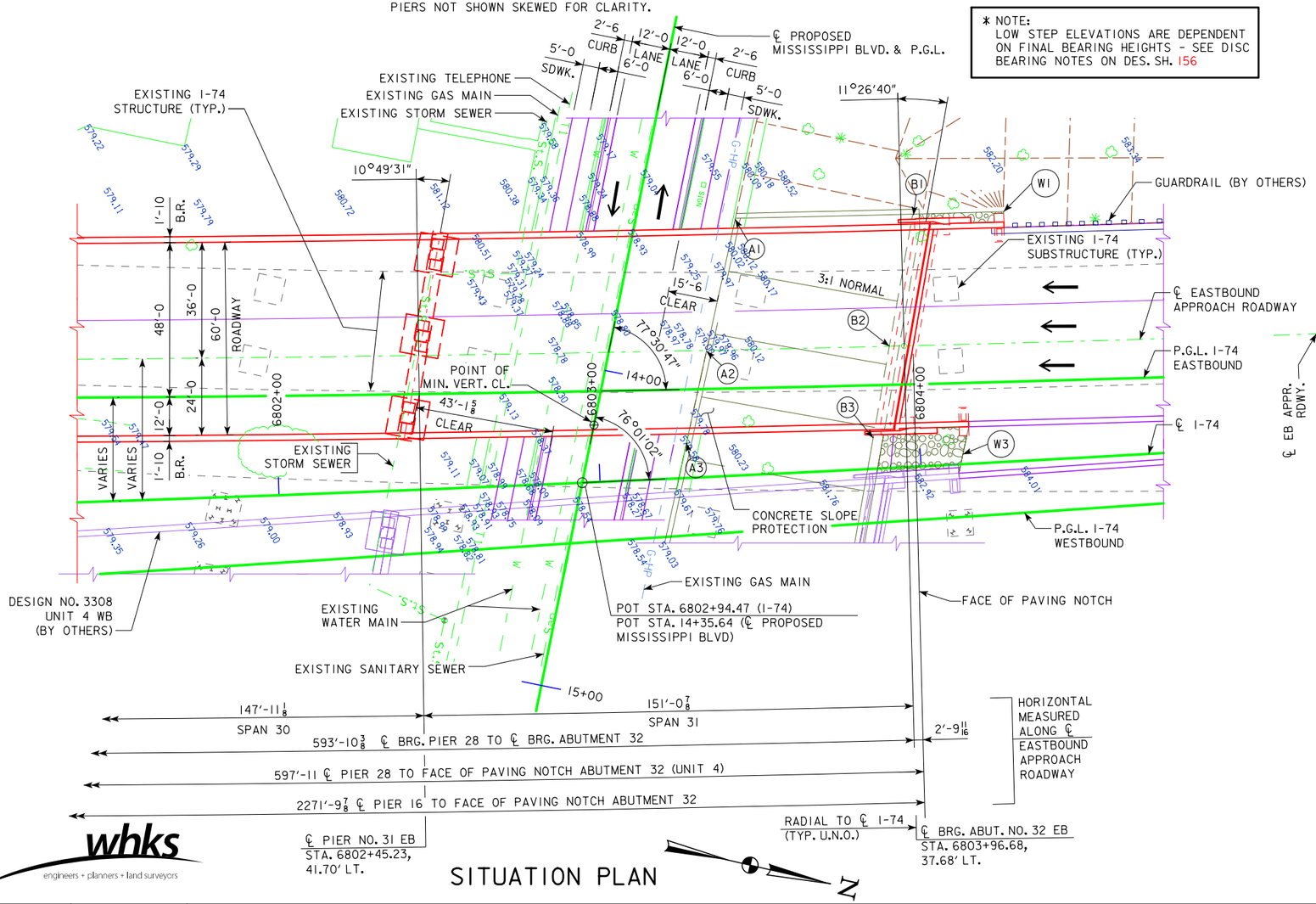

SITUATION PLAN

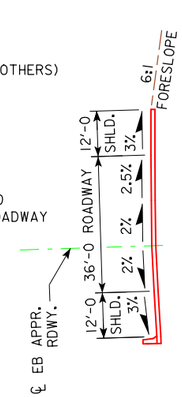

TYPICAL ROADWAY SECTION

MINIMUM VERTICAL CLEARANCE

OVERHEAD STATION = 6802+98.90, 17.77' LT.
OVERHEAD ELEVATION = 602.32'
DEPTH OF SUPERSTRUCTURE = 5.96'
UNDERPASS STATION = 14+17.33
UNDERPASS ELEVATION = 577.26'
MINIMUM VERTICAL CLEARANCE = 19.10'

NOTES:

ALL DIMENSIONS ARE IN FEET.

FOR LOCATIONS OF DECK DRAINS, SEE DESIGN SHEET 268.

FOR LOCATIONS AND DETAILS OF LIGHT POLES, SEE DESIGN SHEETS 225.

FOR LOCATIONS OF SOIL BORINGS, SEE DESIGN SHEET SPS.6.

FOR I-74 EB ROADWAY PROFILE GRADE INFORMATION AND NOTES, SEE DESIGN SHEET 4.

MISSISSIPPI BLVD. SHALL BE LOWERED PRIOR TO CONSTRUCTION OF THIS BRIDGE.

FOR LOCATION INFORMATION, SEE DESIGN SHEET 4.

FOR I-74 EB HORIZONTAL CURVE DATA, SEE DESIGN SHEET 8.

FOR ℄ I-74 HORIZONTAL CURVE DATA, SEE DESIGN SHEET 7.

FOR I-74 EB TRAFFIC ESTIMATE (UNITS 2, 3, & 4), SEE DESIGN SHEETS 6 THRU 8 .

whks
engineers + planners + land surveyors

DESIGN FOR VARIABLE SKEW (L.A.)

2271'-6 x VARI. CONTINUOUS WELDED GIRDER BRIDGE-EBL W/14' BIKE TRAIL

138'-10 & 151'-0 7/8 END SPANS MULTIPLE LENGTH INTERIOR SPANS

SITUATION PLAN - UNIT 4

STA. 6792+60.93 - 52' LEFT ℄ I-74 OCTOBER, 2015

SCOTT COUNTY

IOWA DEPARTMENT OF TRANSPORTATION - HIGHWAY DIVISION

DESIGN SHEET NO. 9 OF 282 FILE NO. 30253 DESIGN NO. 3408

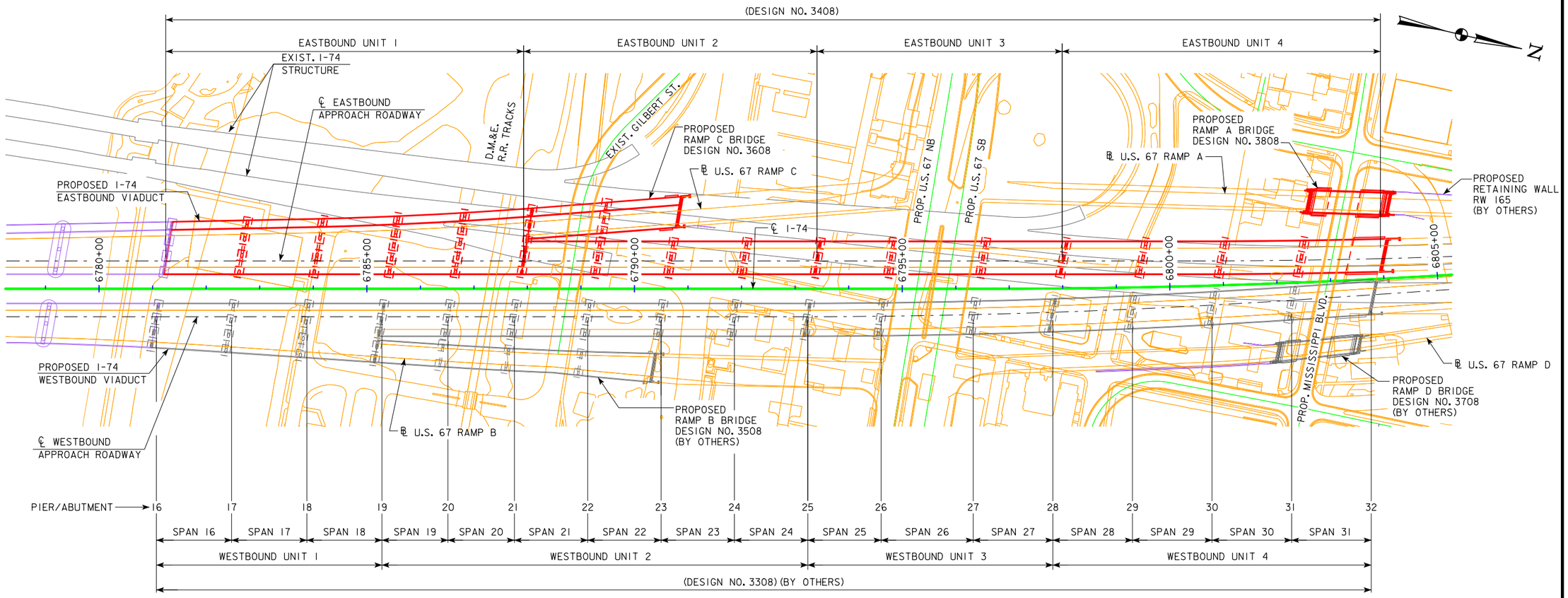

GENERAL PLAN

whks
engineers + planners + land surveyors

DESIGN FOR VARIABLE SKEW (L.A.)

2271'-6 x VARI. CONTINUOUS WELDED GIRDER BRIDGE-EBL W/14' BIKE TRAIL

138'-10 & 151'-0 7/8 END SPANS MULTIPLE LENGTH INTERIOR SPANS

GENERAL PLAN

STA. 6792+60.93 - 52' LEFT ℄ I-74 OCTOBER, 2015

SCOTT COUNTY

IOWA DEPARTMENT OF TRANSPORTATION - HIGHWAY DIVISION

DESIGN SHEET NO. 10 OF 282 FILE NO. 30253 DESIGN NO. 3408

DESIGN TEAM BENESCH	SCOTT COUNTY	PROJECT NUMBER BRFIM-074-1(200)5--05-82	SHEET NUMBER 11

BENCH MARK NO. 500: STA. 6781+18.92 LT. 161.19'
ELEV. 575.797, CHISELED "X" IN BOLT E. SIDE
CONCRETE STRUCTURE

NOTE:
REMOVE SUBSTRUCTURES OF EXISTING STRUCTURES TO THE MINIMUM ELEVATION OF 1 FOOT BELOW EXISTING GROUND ELEVATION OR AS LISTED BELOW. IN ADDITION, WHERE THESE PORTIONS OF EXISTING STRUCTURES LIE WHOLLY OR IN PART WITHIN LIMITS FOR THE NEW EASTBOUND OR WESTBOUND VIADUCT PIERS OR OTHER STRUCTURES, REMOVE AS NECESSARY TO ACCOMMODATE CONSTRUCTION OF THE PROPOSED STRUCTURE.

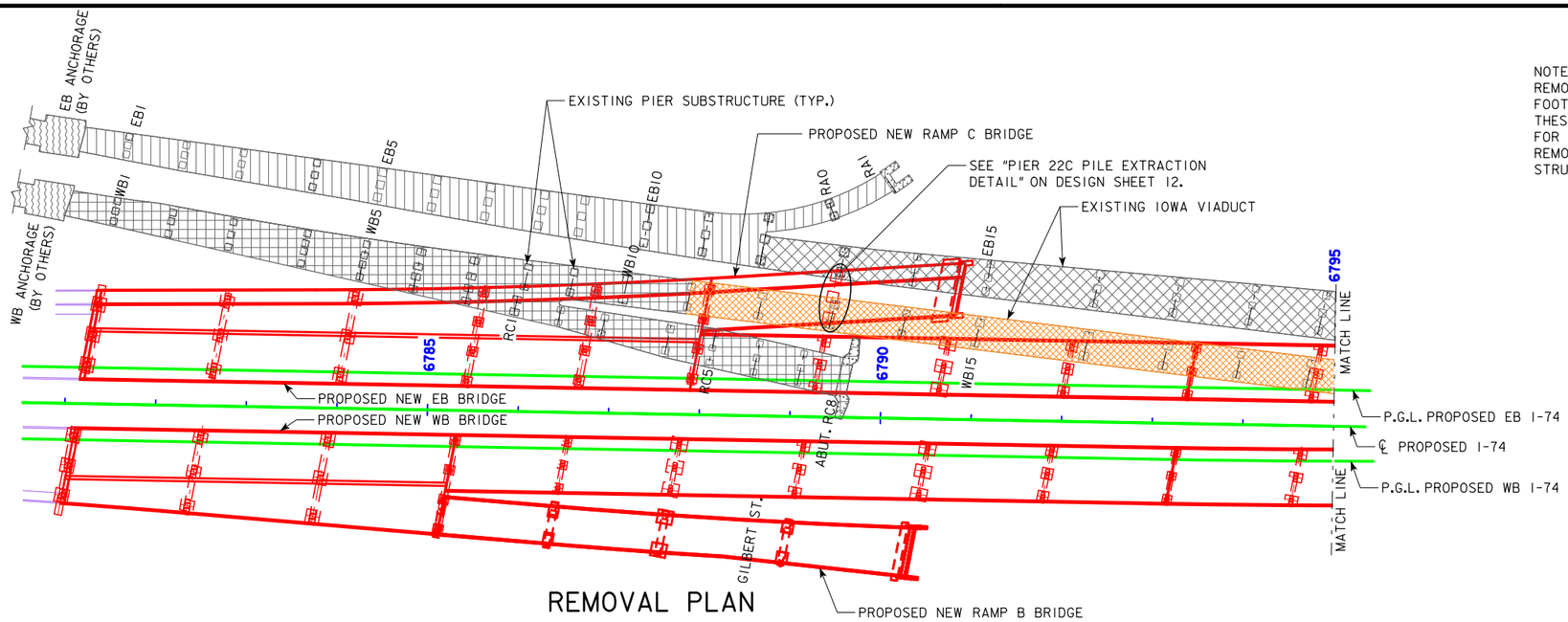

REMOVAL PLAN

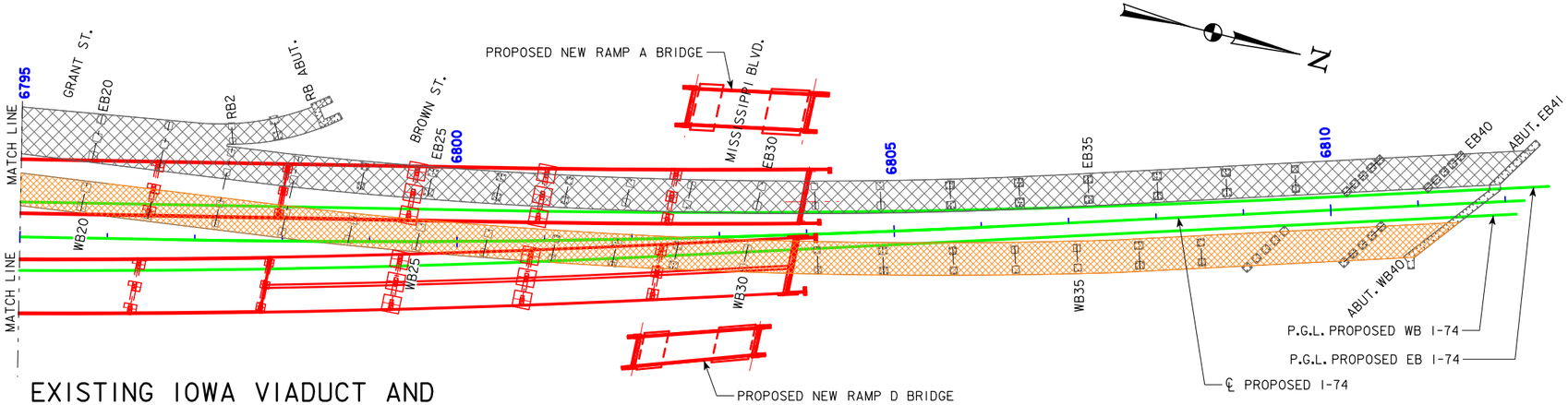

REMOVAL PLAN

SPECIAL SUBSTRUCTURE REMOVAL ELEVATION TABLE (DOES NOT INCLUDE ALL SUBSTRUCTURE REMOVALS REQUIRED)

SUBSTRUCTURE UNIT	MAX. REMOVAL ELEVATION (FEET)
WB1	570.70
WB2	562.68
WB3	563.12
WB4	562.80
WB5	563.51
WB6	562.99
WB7	563.27
WB8	563.02
WB9	563.76
WB10	562.35
WB11	563.50
EB1	572.25
EB2	565.02
EB3	564.23
EB4	561.95
EB5	561.71
EB6	561.89
EB7	562.24
EB8	563.00
EB9	562.83
EB10	562.79
EB14	568.56
EB19	570.38
EB21	571.61
EB22	569.85
EB23	572.73
EB24	573.81
EB25	576.73
EB26	576.85
EB27	577.63
EB28	577.79
EB29	576.89
RC1	563.26
RC2	563.31
RC3	561.55
RC4	563.50
RC5	563.50
RC6	563.90
RC7	564.55

EXISTING IOWA VIADUCT AND RAMP REMOVAL:

STAGE 2A REMOVAL (BY OTHERS), PROJECT NO. BRFIM-074-1(199)5-05-82 (BRIDGE A (199)):
REMOVE EXISTING WB VIADUCT STRUCTURE REQUIRED FOR BRIDGE A (199) CONSTRUCTION/PAVEMENT AND TO LIMIT OF BRIDGE B (200) REMOVAL. THIS WORK INCLUDES REMOVAL OF THE SUPERSTRUCTURE FROM PIER WB11 TO ABUTMENT WB40 (29 SPANS) AND 29 SUBSTRUCTURES, PIERS WB12 THROUGH WB 39 AND ABUTMENT WB40.

WINTER BETWEEN STAGE 2B AND STAGE 3A REMOVAL (THIS CONTRACT), PROJECT NO. BRFIM-074-1(200)5-05-82 (BRIDGE B (200)):
REMOVE EXISTING WB VIADUCT AND WB EXIT RAMP REQUIRED FOR BRIDGE B (200) CONSTRUCTION. THIS WORK INCLUDES REMOVAL OF 11 VIADUCT SPANS BETWEEN THE ANCHORAGE AND PIER WB11 AND 7 RAMP SPANS BETWEEN PIER RC1 AND ABUTMENT RC8, AND 19 SUBSTRUCTURES: WB1 THROUGH WB11 AND RC1 THROUGH RC 8.

STAGE 3A REMOVAL (THIS CONTRACT), BRIDGE B (200):
REMOVE EXISTING EB VIADUCT STRUCTURE REQUIRED FOR NEW VIADUCT CONSTRUCTION AND PAVEMENT. THIS WORK INCLUDES REMOVAL OF THE SUPERSTRUCTURE FROM PIER EB12 TO ABUTMENT EB41 AND PIER RB2 TO RB ABUT. (31 SPANS) AND 32 SUBSTRUCTURES, PIERS EB13 THROUGH EB40 AND PIERS RB0 THROUGH RB1 AND ABUTMENTS EB41 AND RB ABUT.

POST STAGE 3B REMOVAL (THIS CONTRACT), BRIDGE B (200):
REMOVE THE REMAINING ABANDONED EB VIADUCTS IN BETTENDORF. THIS WORK INCLUDES REMOVAL OF THE SUPERSTRUCTURE FROM THE EB ANCHORAGE TO PIER EB12 AND PIER EB12 TO RA1 ABUT. (14 SPANS) AND 14 SUBSTRUCTURES, PIERS EB1 THROUGH EB12, PIER RA0 AND RA1 ABUT.

NOTE:
THE CONTRACTOR MUST COMPLETE THE DEMOLITION OF THE EXISTING WESTBOUND VIADUCT (INCLUDING PIER REMOVAL) WITHIN 90 DAYS OF OPENING THE NEW VIADUCT TO TRAFFIC.

LEGEND

- STAGE 2A REMOVAL (BY OTHERS)
- WINTER BETWEEN STAGE 2B AND STAGE 3A (THIS CONTRACT)
- STAGE 3A REMOVAL (THIS CONTRACT)
- POST STAGE 3B REMOVAL (THIS CONTRACT)
- POST STAGE 3B REMOVAL (BY OTHERS - PROJECT NO. IM-074-1(210)5--13-82)

NOTE:
TEMPORARY BARRIER RAIL NOT SHOWN.

whks
engineers + planners + land surveyors

DESIGN FOR VARIABLE SKEW (L.A.)

2271'-6 x VARI. CONTINUOUS WELDED GIRDER BRIDGE-EBL W/14' BIKE TRAIL

138'-10 & 151'-0 7/8 END SPANS MULTIPLE LENGTH INTERIOR SPANS

REMOVAL PLAN

STA. 6792+60.93 - 52' LEFT ℄ I-74 OCTOBER, 2015

SCOTT COUNTY

IOWA DEPARTMENT OF TRANSPORTATION - HIGHWAY DIVISION

DESIGN SHEET NO. 11 OF 282 FILE NO. 30253 DESIGN NO. 3408

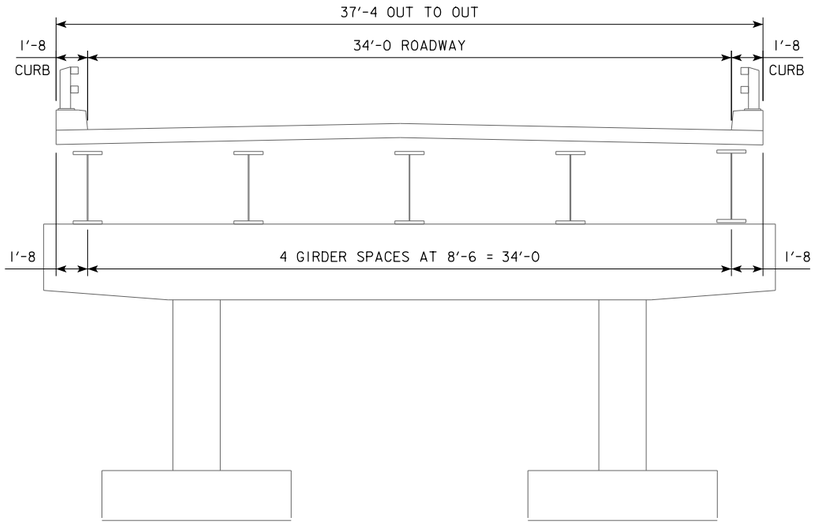

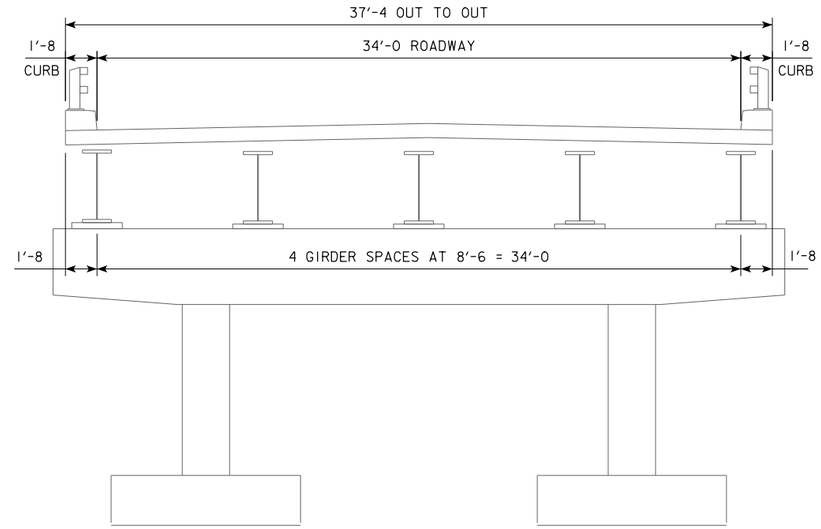

TYPICAL SECTION THRU EXISTING BRIDGES

(LOOKING NORTH)
(SHOWING EXISTING TRANSVERSE SECTION BEFORE REMOVALS)
NEW CONSTRUCTION NOT SHOWN.

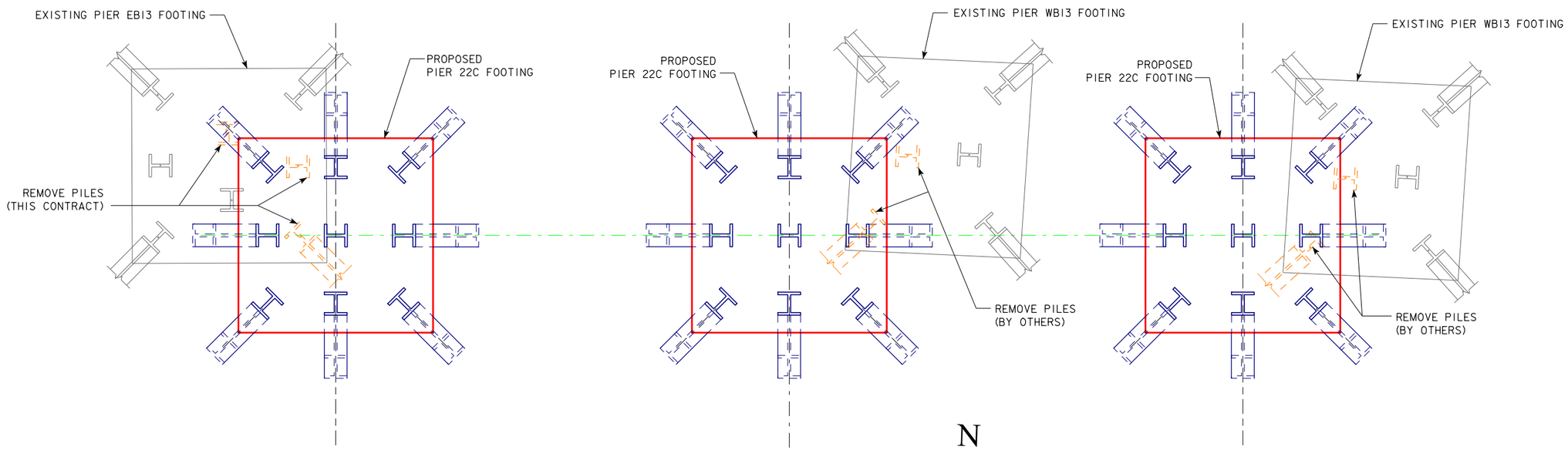

PIER 22C PILE EXTRACTION DETAIL

EXISTING PILES ARE TO BE EXTRACTED WHERE CALLED OUT. HOLES CREATED SHALL BE FILLED WITH SAND AFTER EXTRACTION AND PRIOR TO DRIVING PROPOSED PILES (REFERENCE PIER 22C IN DESIGN NO. 3608). ALL COSTS ASSOCIATED WITH EXTRACTING PILES FROM EXISTING PIER EBI3 FOOTING AND BACKFILLING WITH SAND ARE TO BE INCLUDED IN THE LUMP SUM BID FOR REMOVAL OF EXISTING BRIDGE.

whks
engineers + planners + land surveyors

DESIGN FOR VARIABLE SKEW (L.A.)

227'-6 x VARI. CONTINUOUS WELDED GIRDER BRIDGE-EBL W/14' BIKE TRAIL

138'-10 & 151'-0 7/8 END SPANS MULTIPLE LENGTH INTERIOR SPANS

REMOVAL TRANSVERSE SECTIONS

STA. 6792+60.93 - 52' LEFT ℄ I-74 OCTOBER, 2015

SCOTT COUNTY

IOWA DEPARTMENT OF TRANSPORTATION - HIGHWAY DIVISION

DESIGN SHEET NO. 12 OF 282 FILE NO. 30253 DESIGN NO. 3408

DESIGN TEAM JP / LG / MG	SCOTT COUNTY	PROJECT NUMBER BRFIM-074-1(200)5--05-82	SHEET NUMBER 13

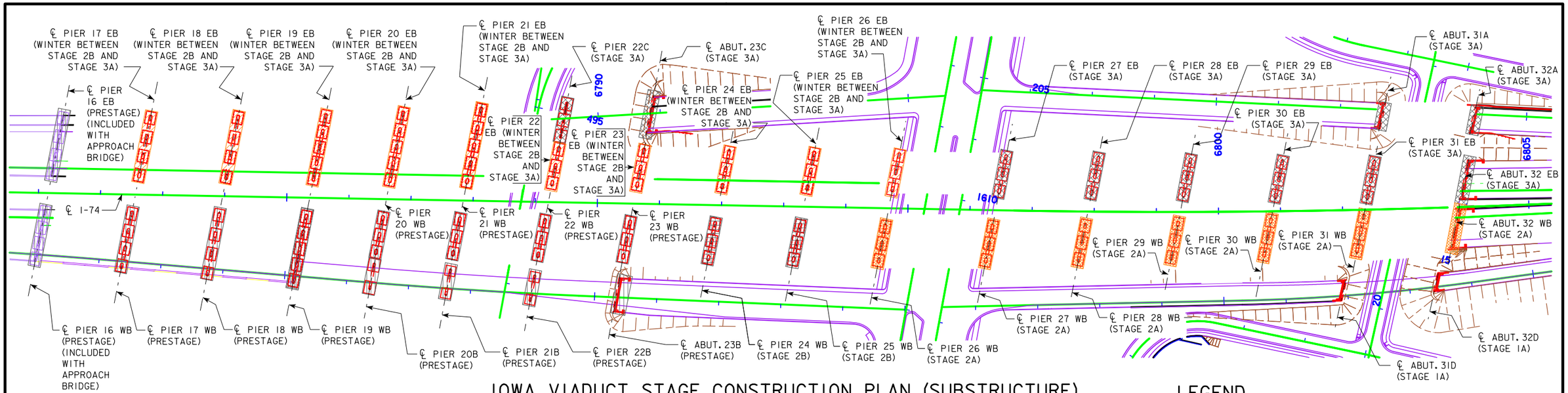

IOWA VIADUCT STAGE CONSTRUCTION PLAN (SUBSTRUCTURE)

LEGEND

PRESTAGE CONSTRUCTION	
STAGE 1A CONSTRUCTION	
STAGE 1B CONSTRUCTION	N/A
STAGE 2A CONSTRUCTION	
STAGE 2B CONSTRUCTION	
WINTER BETWEEN STAGE 2B & STAGE 3A CONSTRUCTION	
STAGE 3A CONSTRUCTION	
STAGE 3B CONSTRUCTION	N/A

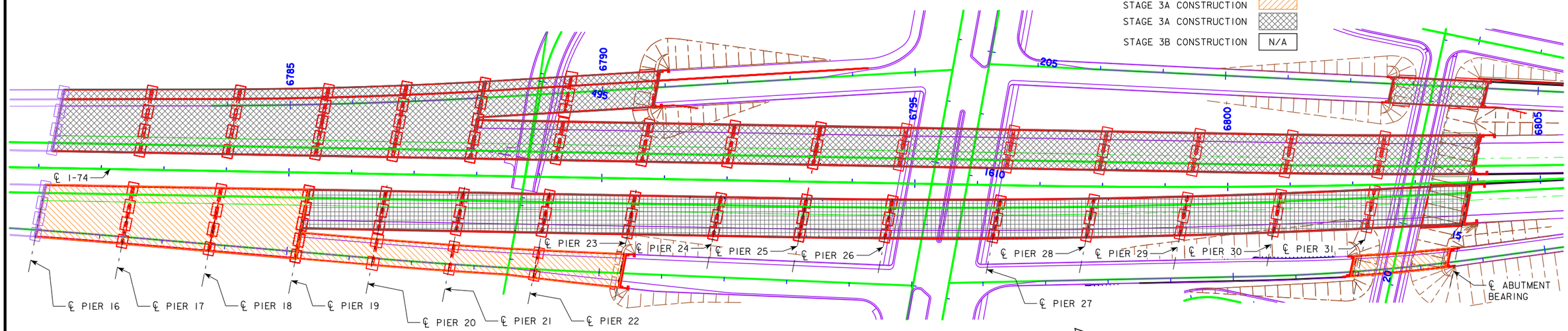

IOWA VIADUCT STAGE CONSTRUCTION PLAN (SUPERSTRUCTURE)

N

NOTE:

PIER 24 WB AND PIER 25 WB CONSTRUCTION TO BE DELAYED UNTIL STAGE 2B AS INDICATED IN ABOVE PLANS IN ORDER TO ALLOW FOR TEMPORARY TRAFFIC MOVEMENTS AROUND THESE PIERS.

WB UNIT 4 SUPERSTRUCTURE MAY BE CONSTRUCTED IN STAGE 2A.

TEMPORARY BARRIER RAIL NOT SHOWN.

whks
engineers + planners + land surveyors

DESIGN FOR VARIABLE SKEW (L.A.)

2271'-6 x VARI. CONTINUOUS WELDED GIRDER BRIDGE-EBL W/14' BIKE TRAIL

138'-10 & 151'-0 7/8 END SPANS MULTIPLE LENGTH INTERIOR SPANS

STAGE CONSTRUCTION PLAN

STA. 6792+60.93 - 52' LEFT ℄ I-74 OCTOBER, 2015

SCOTT COUNTY

IOWA DEPARTMENT OF TRANSPORTATION - HIGHWAY DIVISION

DESIGN SHEET NO. 13 OF 282 FILE NO. 30253 DESIGN NO. 3408

DESIGN TEAM JP / LG / MG	SCOTT COUNTY	PROJECT NUMBER BRFIM-074-1(200)5--05-82	SHEET NUMBER 14

BENCH MARK NO. 500: STA. 6781+18.92 LT. 161.19'
ELEV. 575.797, CHISELED "X" IN BOLT E. SIDE
CONCRETE STRUCTURE

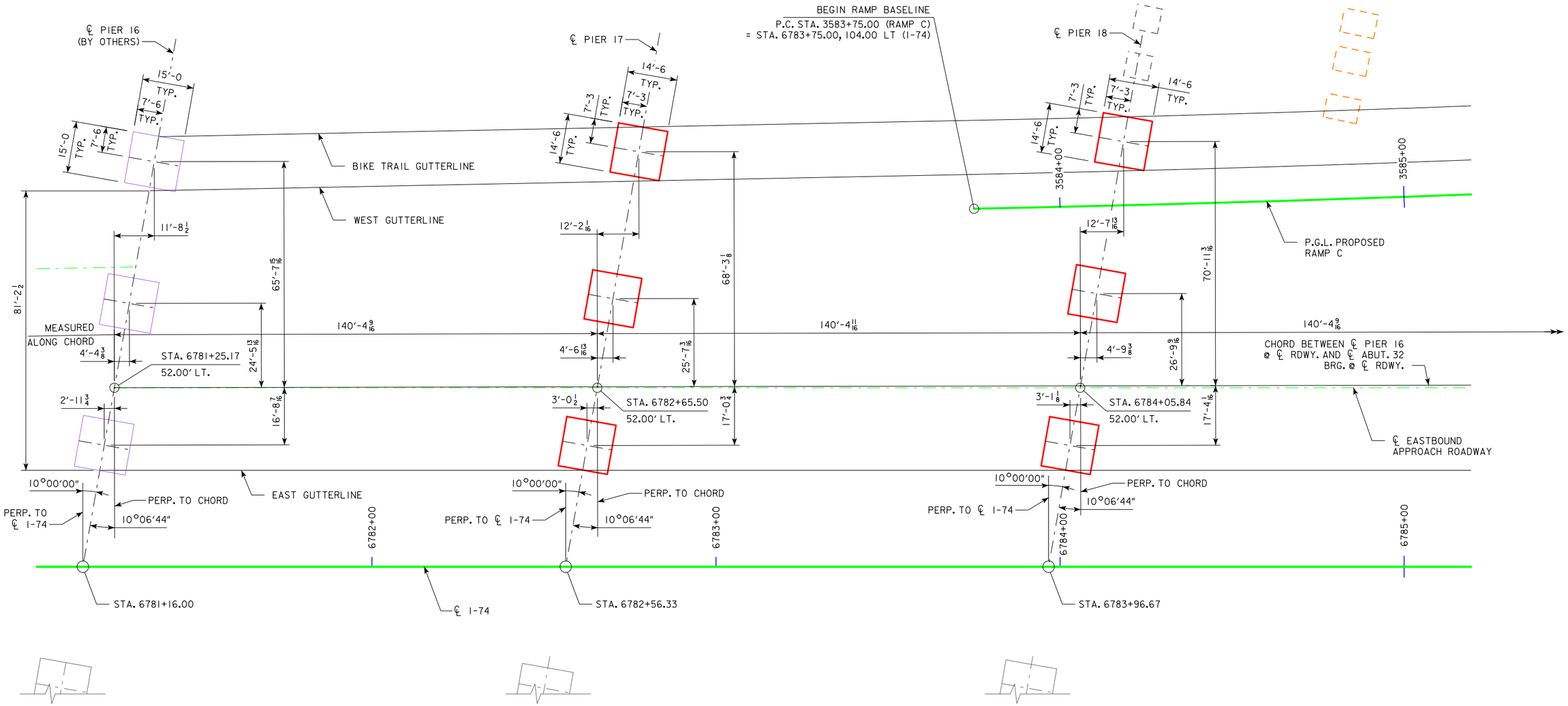

STAKING DIAGRAM

N

NOTES:

SEE DESIGN SHEET 7 FOR ℄ I-74 HORIZONTAL CURVE INFORMATION.

SEE DESIGN SHEET 8 FOR ℄ E.B. APPR. ROADWAY HORIZONTAL CURVE INFORMATION.

SEE DESIGN SHEET 5 FOR RAMP C HORIZONTAL CURVE INFORMATION.

whks
engineers + planners + land surveyors

DESIGN FOR VARIABLE SKEW (L.A.)

2271'-6 x VARI. CONTINUOUS WELDED GIRDER BRIDGE-EBL W/14' BIKE TRAIL

138'-10 & 151'-0 7/8 END SPANS MULTIPLE LENGTH INTERIOR SPANS

STAKING DIAGRAM

STA. 6792+60.93 - 52' LEFT ℄ I-74 OCTOBER, 2015

SCOTT COUNTY

IOWA DEPARTMENT OF TRANSPORTATION - HIGHWAY DIVISION

DESIGN SHEET NO. 14 OF 282 FILE NO. 30253 DESIGN NO. 3408

DESIGN TEAM RE / LG / JP	SCOTT COUNTY	PROJECT NUMBER BRFIM-074-1(200)5--05-82	SHEET NUMBER 15

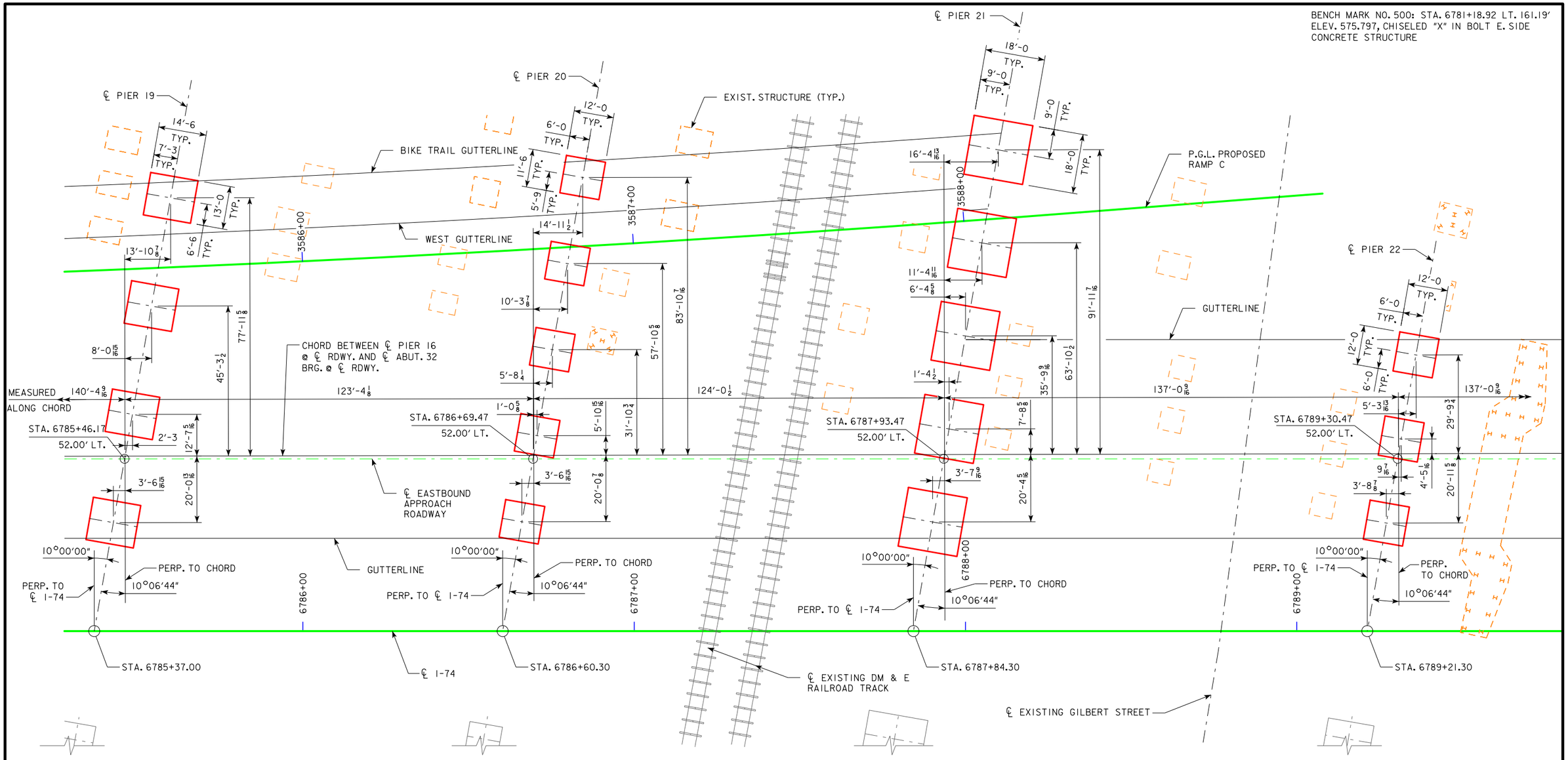

STAKING DIAGRAM

N

NOTES:

SEE DESIGN SHEET 15 FOR STAKING DIAGRAM NOTES.

whks
engineers + planners + land surveyors

DESIGN FOR VARIABLE SKEW (L.A.)

2271'-6 x VARI. CONTINUOUS WELDED GIRDER BRIDGE-EBL W/14' BIKE TRAIL

138'-10 & 151'-0 7/8 END SPANS MULTIPLE LENGTH INTERIOR SPANS

STAKING DIAGRAM

STA. 6792+60.93 - 52' LEFT ℄ I-74 OCTOBER, 2015

SCOTT COUNTY

IOWA DEPARTMENT OF TRANSPORTATION - HIGHWAY DIVISION

DESIGN SHEET NO. 15 OF 282 FILE NO. 30253 DESIGN NO. 3408

DESIGN TEAM RE / LG / JP	SCOTT COUNTY	PROJECT NUMBER BRFIM-074-1(200)5--05-82	SHEET NUMBER 16

BENCH MARK NO. 500: STA. 6781+18.92 LT. 161.19'
ELEV. 575.797, CHISELED "X" IN BOLT E. SIDE
CONCRETE STRUCTURE

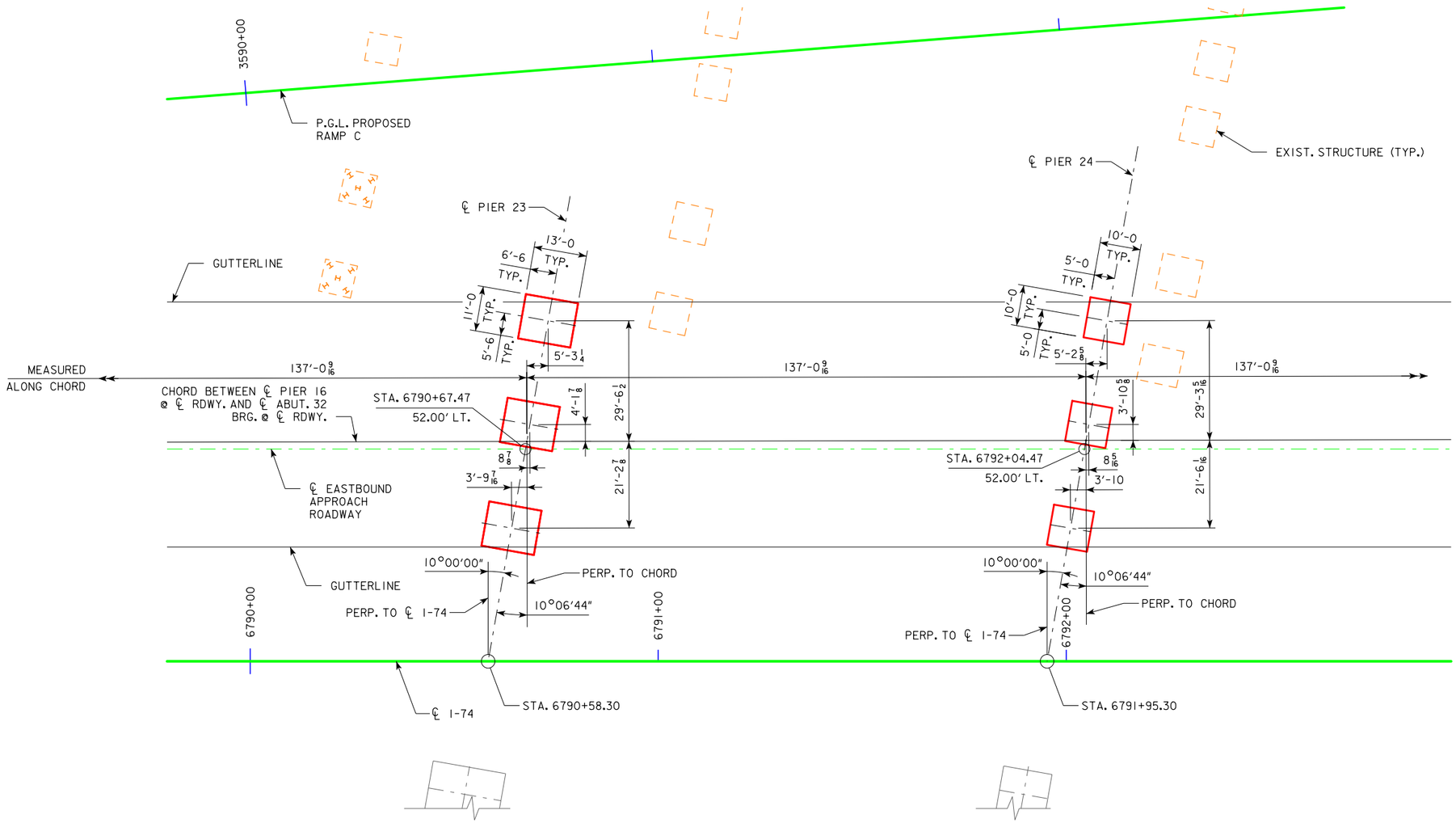

STAKING DIAGRAM

N

NOTES:

SEE DESIGN SHEET 15 FOR STAKING DIAGRAM NOTES.

whks
engineers + planners + land surveyors

DESIGN FOR VARIABLE SKEW (L.A.)

2271'-6 x VARI. CONTINUOUS WELDED GIRDER BRIDGE-EBL W/14' BIKE TRAIL

138'-10 & 151'-0 7/8 END SPANS MULTIPLE LENGTH INTERIOR SPANS

STAKING DIAGRAM

STA. 6792+60.93 - 52' LEFT ℄ I-74 OCTOBER, 2015

SCOTT COUNTY

IOWA DEPARTMENT OF TRANSPORTATION - HIGHWAY DIVISION

DESIGN SHEET NO. 16 OF 282 FILE NO. 30253 DESIGN NO. 3408

DESIGN TEAM RE / LG / JP	SCOTT COUNTY	PROJECT NUMBER BRFIM-074-1(200)5--05-82	SHEET NUMBER 17

BENCH MARK NO. 500: STA. 6781+18.92 LT. 161.19'
ELEV. 575.797, CHISELED "X" IN BOLT E. SIDE
CONCRETE STRUCTURE

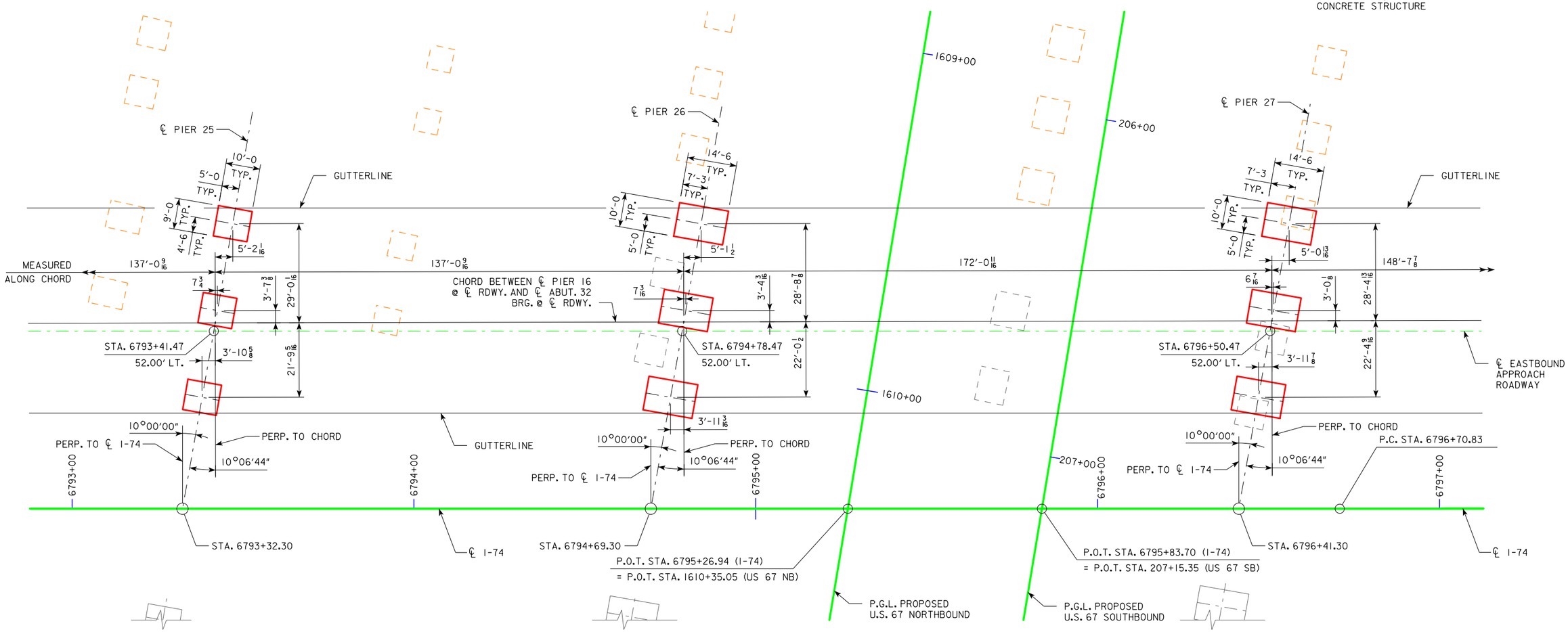

STAKING DIAGRAM

N

whks
engineers + planners + land surveyors

NOTES:

SEE DESIGN SHEET 15 FOR STAKING DIAGRAM NOTES.

DESIGN FOR VARIABLE SKEW (L.A.)

2271'-6 x VARI. CONTINUOUS WELDED GIRDER BRIDGE-EBL W/14' BIKE TRAIL

138'-10 & 151'-0 7/8 END SPANS MULTIPLE LENGTH INTERIOR SPANS

STAKING DIAGRAM

STA. 6792+60.93 - 52' LEFT ℄ I-74 OCTOBER, 2015

SCOTT COUNTY

IOWA DEPARTMENT OF TRANSPORTATION - HIGHWAY DIVISION

DESIGN SHEET NO. 17 OF 282 FILE NO. 30253 DESIGN NO. 3408

DESIGN TEAM RE / LG / JP	SCOTT COUNTY	PROJECT NUMBER BRFIM-074-1(200)5--05-82	SHEET NUMBER 18

BENCH MARK NO. 500: STA. 6781+18.92 LT. 161.19'
ELEV. 575.797, CHISELED "X" IN BOLT E. SIDE
CONCRETE STRUCTURE

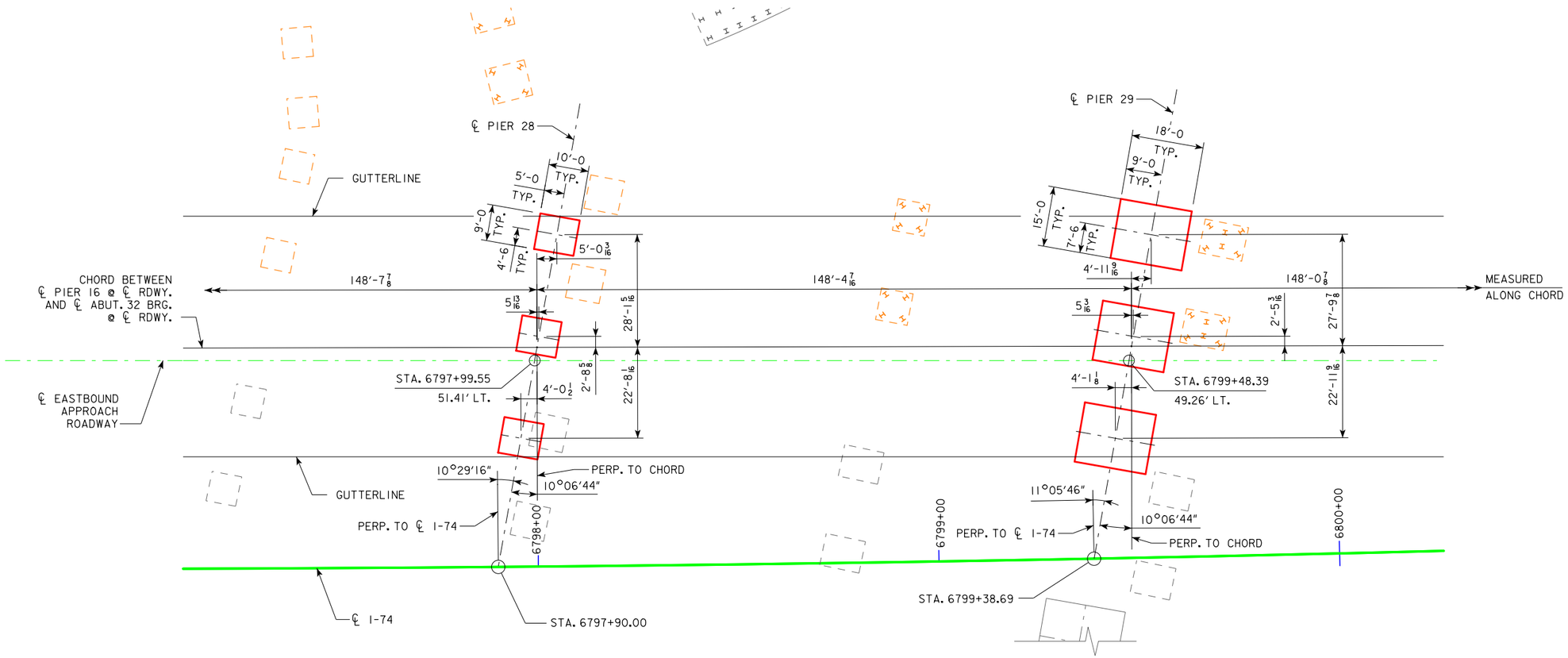

STAKING DIAGRAM

whks
engineers + planners + land surveyors

NOTES:

SEE DESIGN SHEET 15 FOR STAKING DIAGRAM NOTES.

DESIGN FOR VARIABLE SKEW (L.A.)

2271'-6 x VARI. CONTINUOUS WELDED GIRDER BRIDGE-EBL W/14' BIKE TRAIL

138'-10 & 151'-0 7/8 END SPANS MULTIPLE LENGTH INTERIOR SPANS

STAKING DIAGRAM

STA. 6792+60.93 - 52' LEFT ℄ I-74 OCTOBER, 2015

SCOTT COUNTY

IOWA DEPARTMENT OF TRANSPORTATION - HIGHWAY DIVISION

DESIGN SHEET NO. 18 OF 282 FILE NO. 30253 DESIGN NO. 3408

DESIGN TEAM RE / LG / JP	SCOTT COUNTY	PROJECT NUMBER BRFIM-074-1(200)5--05-82	SHEET NUMBER 19

BENCH MARK NO. 500: STA. 6781+18.92 LT. 161.19'
ELEV. 575.797, CHISELED "X" IN BOLT E. SIDE
CONCRETE STRUCTURE

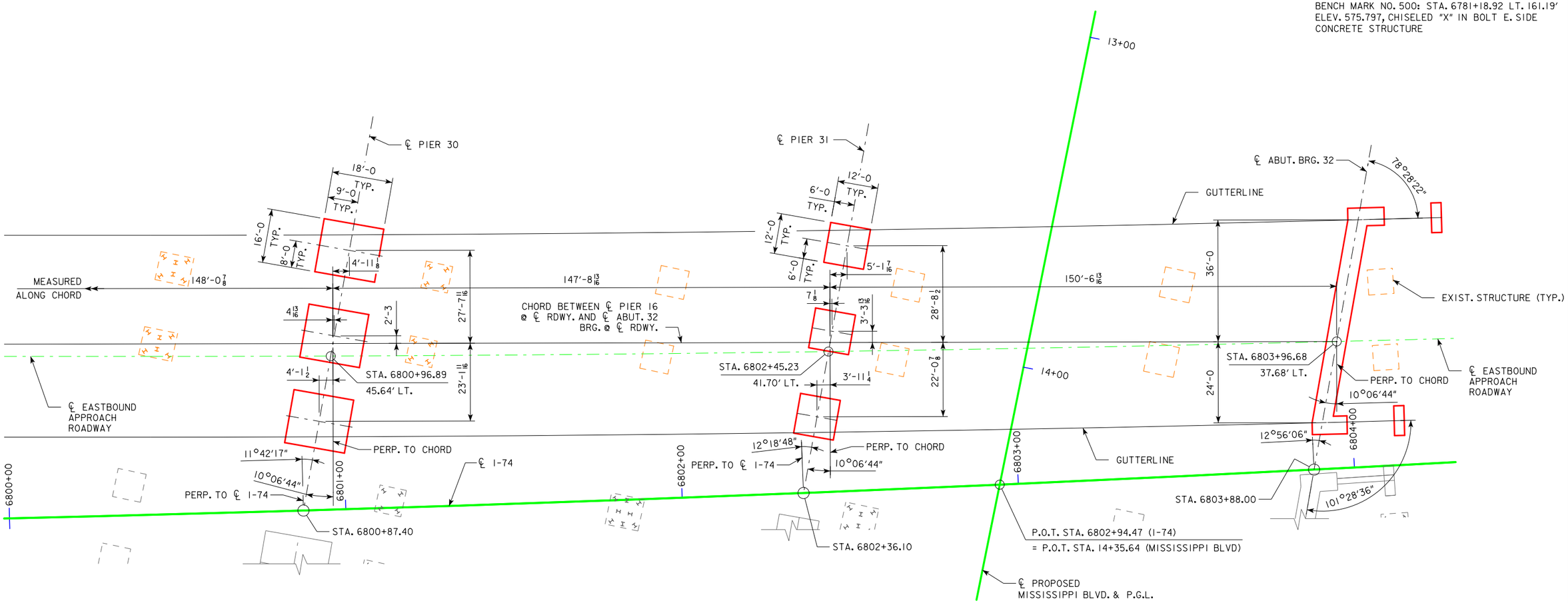

STAKING DIAGRAM

whks
engineers + planners + land surveyors

NOTES:

SEE DESIGN SHEET 15 FOR STAKING DIAGRAM NOTES.

DESIGN FOR VARIABLE SKEW (L.A.)

227'-6 x VARI. CONTINUOUS WELDED GIRDER BRIDGE-EBL W/14' BIKE TRAIL

138'-10 & 151'-0 7/8 END SPANS MULTIPLE LENGTH INTERIOR SPANS

STAKING DIAGRAM

STA. 6792+60.93 - 52' LEFT ℄ I-74 OCTOBER, 2015

SCOTT COUNTY

IOWA DEPARTMENT OF TRANSPORTATION - HIGHWAY DIVISION

DESIGN SHEET NO. 19 OF 282 FILE NO. 30253 DESIGN NO. 3408

DESIGN TEAM RE / LG / JP	SCOTT COUNTY	PROJECT NUMBER BRFIM-074-1(200)5--05-82	SHEET NUMBER 20

PIER NOTES:

THE NOMINAL BEARING RESISTANCE FOR THE SPREAD FOOTINGS IS 60 KSF (SERVICE LIMIT STATE AND FACTORED LRFD STRENGTH I LIMIT STATE). FOOTINGS TO EXTEND AT LEAST 1 FOOT INTO LIMESTONE WITH THE FINAL 1 FOOT OF EXCAVATION TO BE TO NEAT LINES OF THE FOOTING.

ANCHOR BOLTS SHALL NOT BE PRESET ON TWO ADJACENT FIXED PIERS.

PIER ELEVATIONS ARE BASED ON BEARING HEIGHTS SHOWN IN THE CONTRACT PLANS. ACTUAL BEARING HEIGHT MAY DIFFER FROM THE CONTRACT PLANS. CONTRACTOR SHALL VERIFY BEARING HEIGHT AND ADJUST PIER ELEVATIONS, IF REQUIRED, PRIOR TO PLACING PIER FOOTING CONCRETE.

THE MINIMUM CLEAR DISTANCE FROM THE FACE OF CONCRETE TO NEAR REINFORCING BAR IS 2" UNLESS NOTED OTHERWISE OR SHOWN.

ALL EXPOSED CORNERS, 90 DEGREES OR SHARPER SHALL BE FILLETED WITH A $\frac{3}{4}$" DRESSED AND BEVELED STRIP UNLESS NOTED OTHERWISE.

REINFORCING BARS MUST BE PLACED TO CLEAR ANCHOR BOLTS. SHIFT SLIGHTLY AS REQUIRED. CONTRACTOR SHALL VERIFY BAR CLEARANCE FOR DRILLING ANCHOR BOLT HOLES.

SEE STAKING DIAGRAM ON DESIGN SHEETS 15-20 FOR PIER LAYOUT.

ELEVATIONS BASED ON NGVD 88 DATUM.

SPECIFICATIONS FOR MASS CONCRETE CONTROL OF HEAT OF HYDRATION SHALL APPLY TO THE CAP AND COLUMNS.

THE USE OF STEEL OR HIGH-DENSITY OVERLAID (HDO) PLYWOOD FACED FORMS IS REQUIRED FOR THE FORMING OF ALL PIER CONCRETE SURFACES FROM THE TOP OF THE FOOTING TO THE BOTTOM OF PIER CAP. THE USE OF STEEL, HDO OR MEDIUM-DENSITY OVERLAID (MDO) PLYWOOD FACED FORMS IS REQUIRED FOR THE FORMING OF THE PIER CAP. PLAIN PLYWOOD-FACED FORMS WILL NOT BE ALLOWED FOR ANY PORTION OF THE PIER STEM, COLUMNS OR CAP SURFACES.

THE CONTRACTOR SHALL USE SELF CONSOLIDATING CONCRETE FOR THE COLUMN PORTION OF THE PIER. THE SELF CONSOLIDATING CONCRETE SHALL MEET THE REQUIREMENTS OF IM445. PLACEMENT OF THE SELF CONSOLIDATING CONCRETE SHALL CONFORM TO THE REQUIREMENTS STATED IN THE SPECIAL PROVISIONS FOR HIGH PERFORMANCE SELF CONSOLIDATING CONCRETE (HP-SCC).
THE CONTRACTOR SHALL SUBMIT A MIX DESIGN AND METHOD FOR PLACEMENT.
THE CONTRACTOR SHALL PROVIDE ADEQUATE FORMS TO CONTAIN THE INCREASED HYDRAULIC PRESSURE OF THE SELF CONSOLIDATING CONCRETE.

KEYWAY DETAILS NOT SHOWN ON ALL PIER SHEETS. FOR PIERS 17 THRU 18, KEYWAY DETAILS ARE PROVIDED ON DESIGN SHEETS 21 AND 60 . FOR PIERS 19 THRU 31, KEYWAY DETAILS ARE PROVIDED ON DESIGN SHEETS 32 AND 60.

FOR PIER COLUMN CONCRETE SEE "DEVELOPMENTAL SPECIFICATIONS FOR HIGH PERFORMANCE SELF CONSOLIDATING CONCRETE (HP-SCC)".

ANCHOR BOLTS SHALL BE SET IN ACCORDANCE WITH ARTICLE 2405.03,H OF THE STANDARD SPECIFICATIONS.

WELDING OF ANCHOR BOLTS SHALL NOT BE ALLOWED. THE CONTRACTOR SHALL OBTAIN A TEMPLATE FROM THE MANUFACTURER / FABRICATOR FOR PROPER PLACEMENT OF THE ANCHOR BOLTS.

CONDUIT WILL BE PRESENT IN THE PIER CAPS OF PIERS 17 THRU 31 AND THE COLUMNS/FOOTINGS OF PIERS 18-19, 21, 26-27, AND 29; SEE SHEETS P.20 THRU P.28 AND N.16 THRU N.20 FOR PLACEMENT DETAILS. ALL CONDUIT LOCATIONS SHOWN ON THE PIER PLANS ARE APPROXIMATE.

ALL BATTERED PILES SHALL BE TRIMMED TO A HORIZONTAL LINE TO AID IN THE PLACEMENT OF REINFORCING.

THE TREMIE TUBE SHALL BE IN PLACE PRIOR TO PLACING FORMWORK.

PIER CONCRETE FINISHING NOTES:

NO PRODUCTION WORK ON FINAL PIERS SHALL BEGIN UNTIL APPROVAL OF THE PIER MOCKUP BY THE ENGINEER.

IF FORM TIES ARE USED IN FORMING THE PIER, ARRANGE TIES TO BE REGULARLY SPACED AND IN A CONSISTENT GEOMETRIC GRID PATTERN. DO NOT LOCATE TIES AT EDGES OF CONCRETE RUSTICATIONS.

FOLLOWING FORM REMOVAL, A CLASS 2 STRIP DOWN SURFACE FINISH IN ACCORDANCE WITH ARTICLE 2403, P, 2, B, OF THE STANDARD SPECIFICATIONS SHALL BE REQUIRED BUT WITH THE FOLLOWING ADDITIONAL REQUIREMENTS:

1. DEMONSTRATE HOLE AND VOID PATCHING OPERATIONS IN ACCORDANCE WITH ARTICLE 2403, P, 2, B, OF THE STANDARD SPECIFICATIONS ON A FOUR FOOT SECTION OF VERTICAL PIER CONCRETE LOCATED IN AN INCONSPICUOUS AREA. BEGIN PATCHING DEMONSTRATION BY USING A MORTAR MIX COMPRISED OF 1 PART WHITE CEMENT, 2 PARTS STANDARD PORTLAND CEMENT, 6 PARTS MORTAR SAND, AND WATER. THE QUANTITY OF WATER USED SHALL PRODUCE A MORTAR CONSISTENCY AS DRY AS POSSIBLE TO USE EFFECTIVELY.

2. WHEN PATCHING TEST AREAS HAVE SET, SATURATE WITH WATER AND RUB WITH A FINE CARBORUNDUM STONE UNTIL SURFACES ARE SMOOTH IN TEXTURE. REMOVE LOOSE POWDER AND OTHER CONTAMINANTS BY RUBBING WITH BURLAP AND RINSING WITH WATER. AFTER SURFACES HAVE DRIED, PATCH COLOR AND TEXTURE OF SURFACES WILL BE REVIEWED BY THE ENGINEER. PATCHES SHOULD MATCH OR BE SLIGHTLY LIGHTER THAN SURROUNDING CONCRETE. IF RESULTS ARE UNSATISFACTORY, ADJUST PATCHING MORTAR MIX PROPORTIONS AND PERFORM ANOTHER DEMONSTRATION UNTIL RESULTS ARE DEEMED SATISFACTORY BY THE ENGINEER.

3. USE THE PATCHING MORTAR MIX PROPORTIONS THAT ARE APPROVED BY THE ENGINEER AS A RESULT OF THE SATISFACTORY DEMONSTRATION. DO NOT USE PATCHING MORTAR THAT IS MORE THAN 1 HOUR OLD.

4. FINISHED PIER CONCRETE SHALL BE SMOOTH AND SHOW NO WOOD GRAIN, FORM LINE, OR OTHER TEXTURE FROM THE FACE OF THE FORMS USED. ALL COSTS FOR REPAIR OR COVERING WOOD GRAIN, FORM LINE, OR OTHER TEXTURES ON THESE SURFACES SHALL BE THE RESPONSIBILITY OF THE CONTRACTOR.

5. CONCRETE SEALER IS TO BE APPLIED TO THE TOP OF PIERS 16, 21, 25 AND 28 IN ACCORDANCE WITH ARTICLE 2403.03, P. 3 OF THE STANDARD SPECIFICATIONS. DO NOT APPLY CURING COMPOUNDS, SEALERS, OR OTHER COATINGS TO THE VERTICAL SURFACES OF PIERS 16, 21, 25 AND 28 OR TO THE FINISHED SURFACES OF THE OTHER PIERS.

PIER 16 PEDESTAL ELEVATIONS

GIRDER	UNIT 1 ELEVATION
A	610.86
B	611.02
C	611.17
D	611.07
E	610.83
F	610.60
G	610.36
H	610.12
J	609.89
K	609.67
P	609.46

PIERS 17-21 COLUMN BAR SUBSTITUTION DETAILS

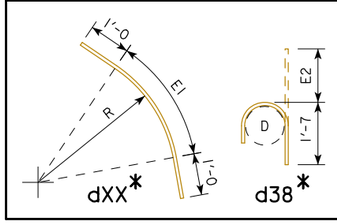

THE 1'-0 END DIMENSION IS STRAIGHT.

ALL DIMENSIONS ARE OUT TO OUT UNLESS NOTED.

D = PIN DIAMETER.

R = INSIDE RADIUS

PIER NO.	BAR SIZE	E2	D
17EB	#10	1'-5	$10\frac{3}{4}$
18EB	#10	1'-5	$10\frac{3}{4}$
19EB	#8	0'-11	6
20EB	#8	0'-11	6
21EB	#10	1'-5	$10\frac{3}{4}$

PIER COLUMN BAR SUBSTITUTION NOTES:

'R' IS GIVEN IN THE CORRESPONDING TABLE FOR THE SUBSTITUTED BAR ON THE BAR LIST DESIGN SHEET. TO DETERMINE DIMENSION 'E1', USE THE EQUATION:
E1 = E - 3'-7
WHERE 'E' IS THE ORIGINAL DIMENSION OF THE SUBSTITUTED BAR FROM THE CORRESPONDING BAR TABLE.

BARS d38 & dXX CONNECTED WITH A MECHANICAL BAR SPLICER MAY BE SUBSTITUTED FOR BARS DESIGNATED * IN THE BAR LISTS.

ALL COLUMN BAR SUBSTITUTIONS AT PIER 21 SHALL BE EPOXY COATED.

THE CONTRACTOR SHALL SUBMIT SHOP DRAWINGS FOR APPROVAL FOR ANY SUBSTITUTED BARS. NO ADDITIONAL PAYMENT WILL BE MADE FOR THE SUBSTITUTED BARS OR MECHANICAL SPLICERS.

whks
engineers + planners + land surveyors

DESIGN FOR VARIABLE SKEW (L.A.)

2271'-6 x VARI. CONTINUOUS WELDED GIRDER BRIDGE-EBL W/14' BIKE TRAIL

138'-10 & 151'-0$\frac{7}{8}$ END SPANS MULTIPLE LENGTH INTERIOR SPANS

PIER NOTES

STA. 6792+60.93 - 52' LEFT ℄ I-74 OCTOBER, 2015

SCOTT COUNTY

IOWA DEPARTMENT OF TRANSPORTATION - HIGHWAY DIVISION

DESIGN SHEET NO. 20 OF 282 FILE NO. 30253 DESIGN NO. 3408

BENCH MARK NO. 500: STA. 6781+18.92 LT. 161.19'
ELEV. 575.797, CHISELED "X" IN BOLT E. SIDE
CONCRETE STRUCTURE

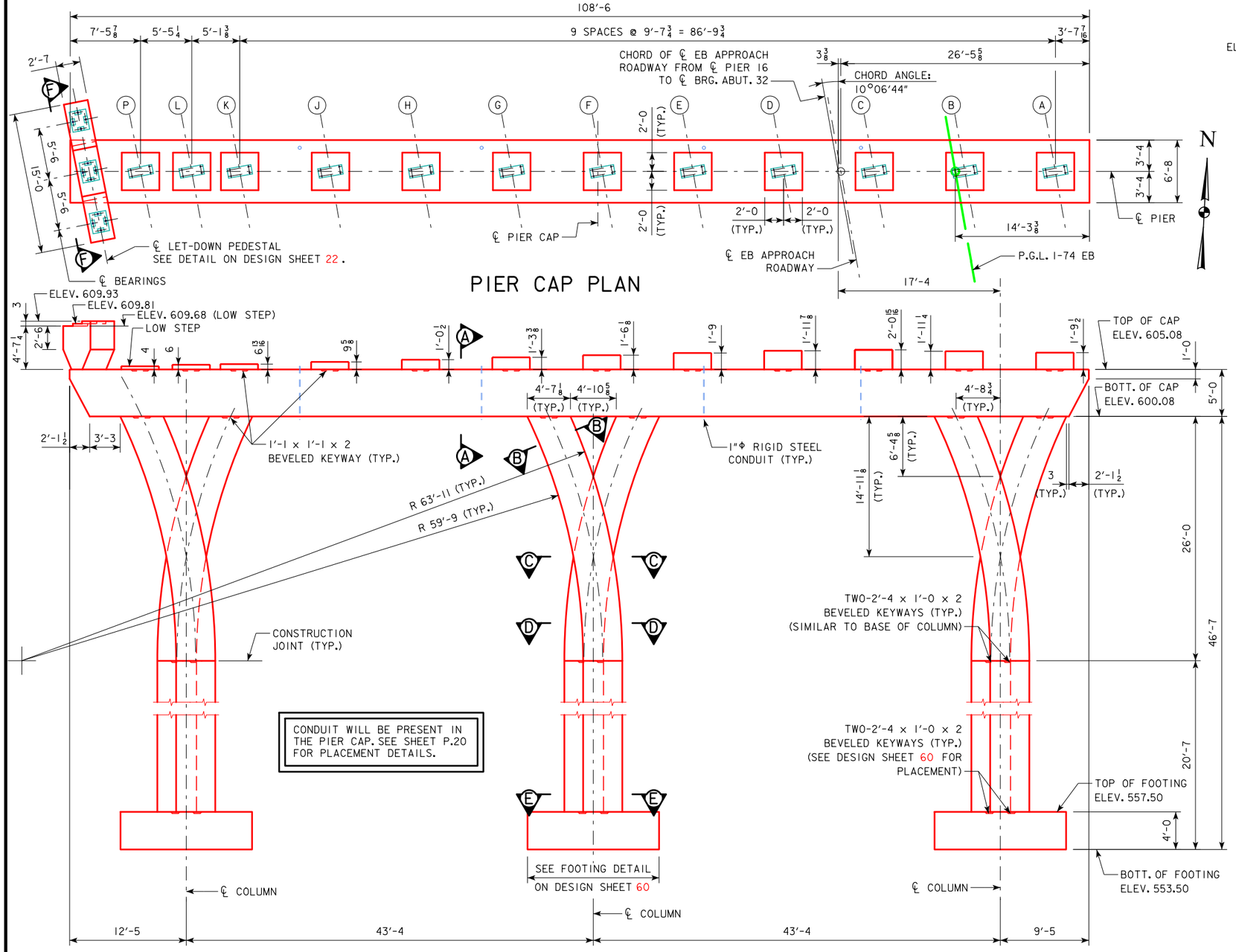

CONDUIT WILL BE PRESENT IN THE PIER CAP. SEE SHEET P.20 FOR PLACEMENT DETAILS.

PIER CAP PLAN

PIER ELEVATION
(LOOKING UPSTATION)

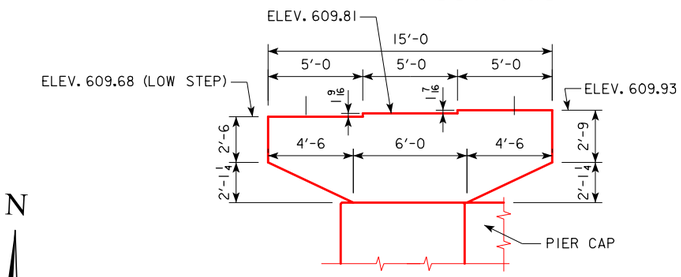

VIEW F-F
LET-DOWN PEDESTAL ELEVATION
(LOOKING EAST)

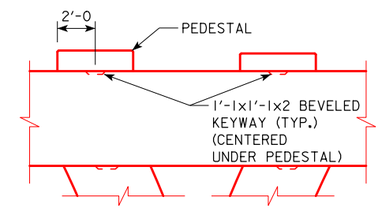

PIER CAP ELEVATION VIEW

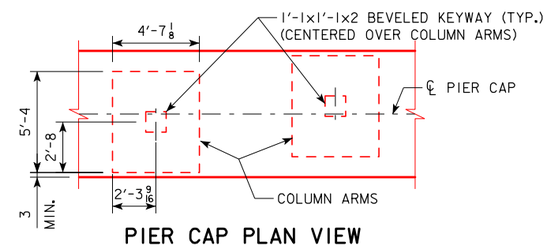

PIER CAP PLAN VIEW

KEYWAY DETAILS
(PIERS 17 & 18)

PEDESTAL ELEV.	
GIRDER	ELEV.
A	606.87
B	607.02
C	607.16
D	607.07
E	606.83
F	606.59
G	606.36
H	606.12
J	605.88
K	605.65
L	605.58
P	605.41

NOTES:
SEE DESIGN SHEET 20 FOR PIER NOTES.
SEE DESIGN SHEET 23 FOR SECTIONS A-A, B-B, C-C, D-D, & E-E.
SEE DESIGN SHEET 60 FOR FOOTING DIMENSIONS.
SEE DESIGN SHEET 56 FOR ANCHOR BOLT LAYOUT.
SEE DESIGN SHEET 60 FOR COLUMN KEYWAY DETAILS.

whks
engineers + planners + land surveyors

DESIGN FOR VARIABLE SKEW (L.A.)

2271'-6 x VARI. CONTINUOUS WELDED GIRDER BRIDGE-EBL W/14' BIKE TRAIL

138'-10 & 151'-0⅞ END SPANS MULTIPLE LENGTH INTERIOR SPANS

PIER 17 DETAILS

STA. 6792+60.93 - 52' LEFT ℄ I-74 OCTOBER, 2015

SCOTT COUNTY

IOWA DEPARTMENT OF TRANSPORTATION - HIGHWAY DIVISION

DESIGN SHEET NO. 21 OF 282 FILE NO. 30253 DESIGN NO. 3408

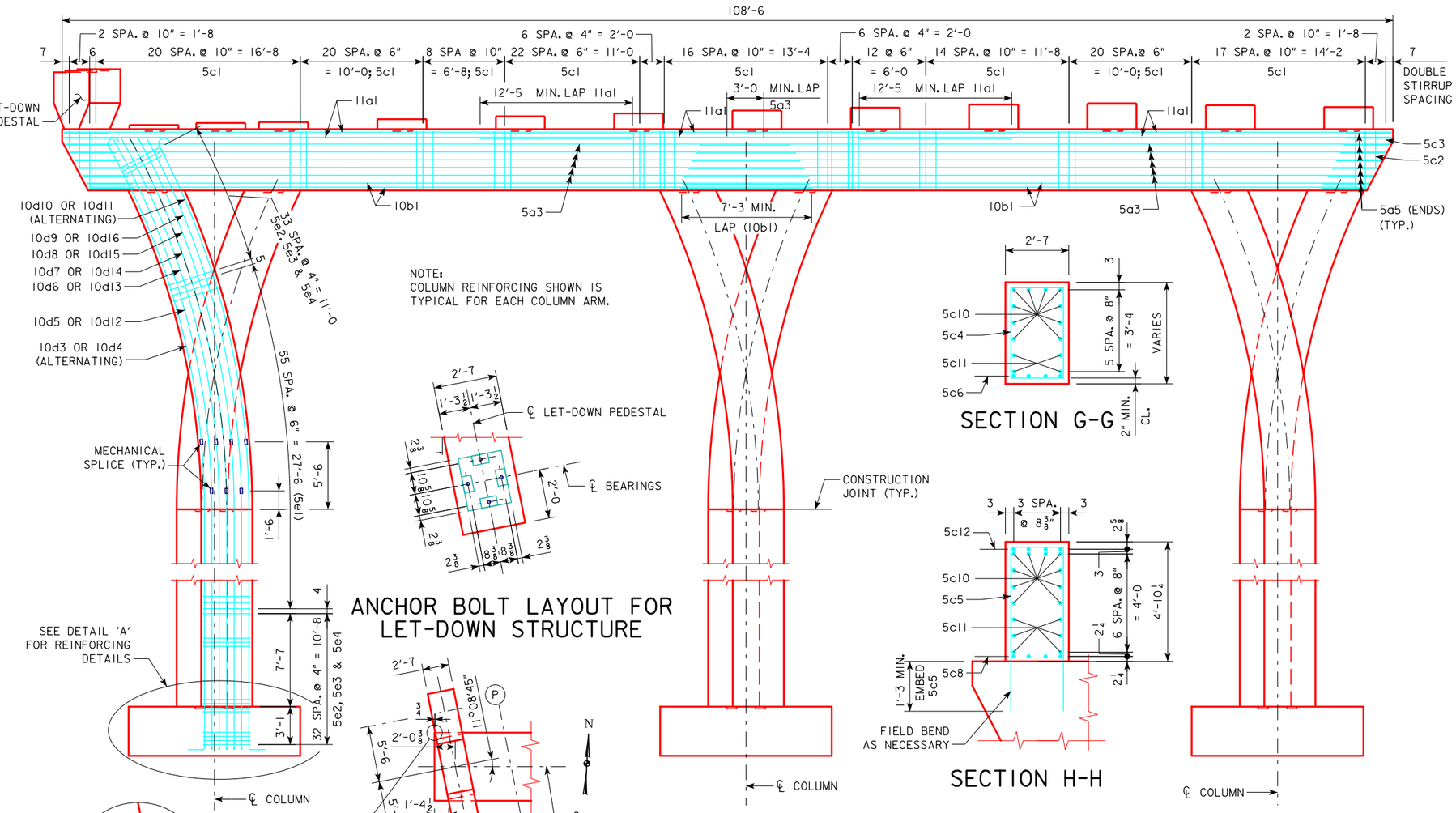

NOTE:
COLUMN REINFORCING SHOWN IS TYPICAL FOR EACH COLUMN ARM.

PIER 17 ELEVATION
(LOOKING UPSTATION)

ANCHOR BOLT LAYOUT FOR LET-DOWN STRUCTURE

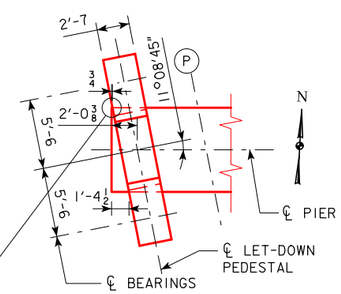

LET-DOWN PEDESTAL DETAIL

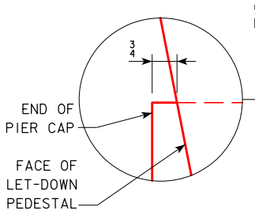

SECTION G-G

SECTION H-H

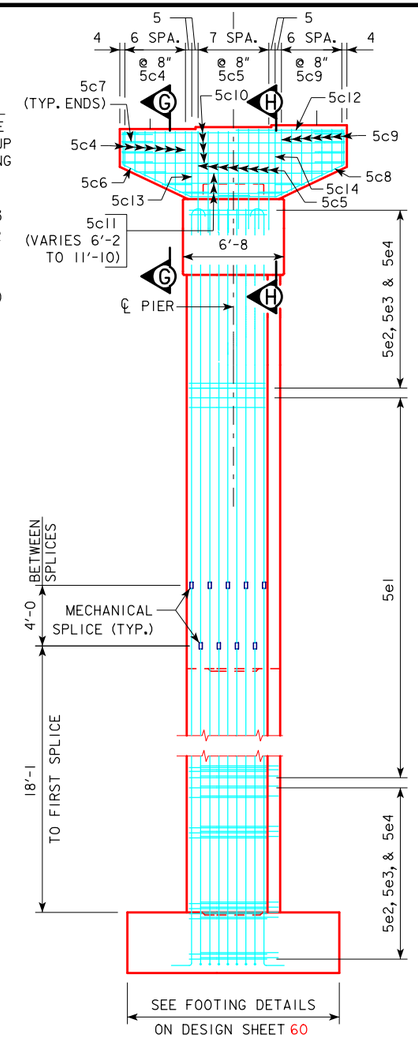

PIER END VIEW

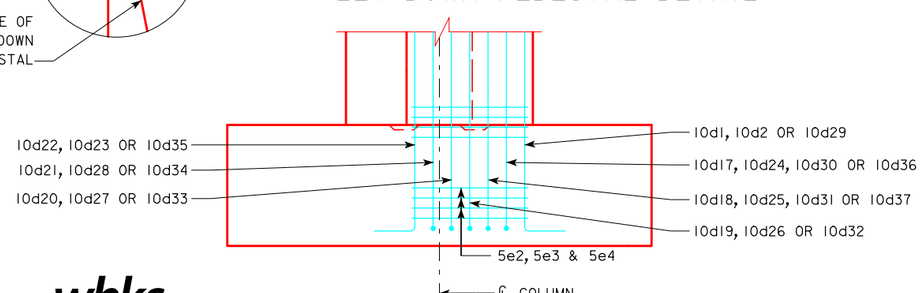

DETAIL 'A'

NOTES:
SEE DESIGN SHEET 20 FOR PIER NOTES.

SEE DESIGN SHEET 24 FOR BENT BAR DETAILS.

MECHANICAL SPLICES SHALL BE PROVIDED FOR 10d BARS, ALTERNATE BARS BEING SPLICED, SUCH THAT NO MORE THAN HALF OF THE 10d BARS ARE SPLICED AT ONE LOCATION. SPACE SPLICE LOCATIONS AT 4'-0 MINIMUM ALONG ℄ OF COLUMN.

THE MECHANICAL SPLICES USED SHALL MEET THE REQUIREMENTS OF MATERIALS I.M.451, APPENDIX E.

THE COST OF ALL MECHANICAL SPLICES IS TO BE INCLUDED IN THE PRICE BID FOR "REINFORCING STEEL" AND NO SEPARATE PAYMENT WILL BE MADE. THE WEIGHT OF THE MECHANICAL SPLICES IS NOT INCLUDED IN THE QUANTITY SHOWN ON DES. SH. 24 FOR "REINFORCING STEEL". A TOTAL OF 168 MECHANICAL SPLICES WILL BE REQUIRED AT PIER 17.

SEE DESIGN SHEET 60 FOR FOOTING REINFORCEMENT DETAILS.

whks
engineers + planners + land surveyors

DESIGN FOR VARIABLE SKEW (L.A.)

2271'-6 x VARI. CONTINUOUS WELDED GIRDER BRIDGE-EBL W/14' BIKE TRAIL

138'-10 & 151'-0 7/8 END SPANS MULTIPLE LENGTH INTERIOR SPANS

PIER 17 DETAILS

STA. 6792+60.93 - 52' LEFT ℄ I-74 OCTOBER, 2015

SCOTT COUNTY

IOWA DEPARTMENT OF TRANSPORTATION - HIGHWAY DIVISION

DESIGN SHEET NO. 22 OF 282 FILE NO. 30253 DESIGN NO. 3408

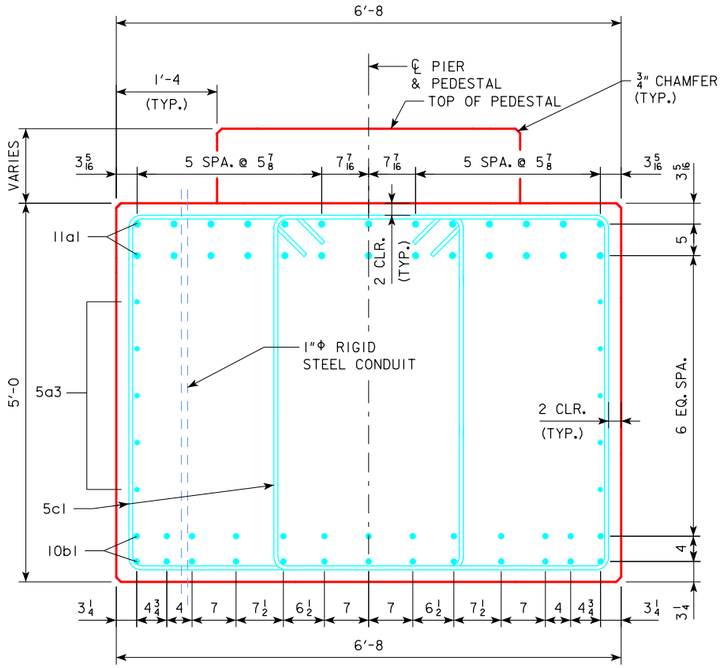

SECTION A-A

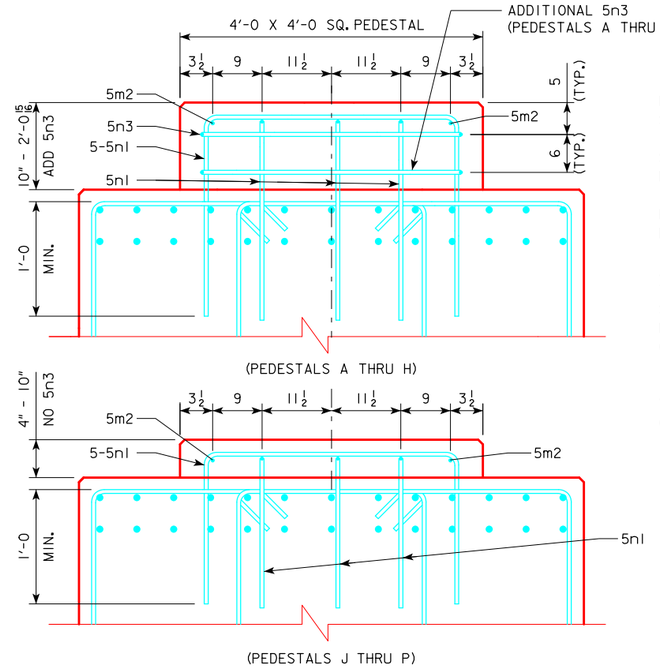

PEDESTAL REINFORCING DETAILS

NOTES:
SEE DESIGN SHEET 20 FOR PIER NOTES.

SEE DESIGN SHEET 24 FOR BENT BAR DETAILS.

FOR LOCATIONS OF SECTIONS A-A, B-B, C-C, D-D & E-E, SEE DESIGN SHEET 21.

ALTERNATE DIRECTION OF 5e3 & 5e4 CROSS TIES SUCH THAT 135° AND 90° HOOKS SWITCH ENDS AT EACH VERTICAL LAYER AND MAINTAIN A MINIMUM OF 1½" CLEAR COVER TO TIES.

10d29 THRU 10d37 BARS ARE SHOWN BUNDLED VERTICALLY FOR CLARITY. ACTUAL BUNDLE ORIENTATION SHALL BE SIDE BY SIDE.

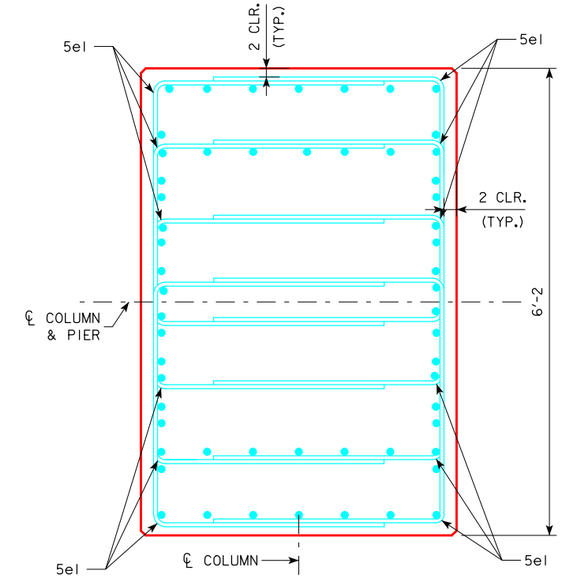

SECTION C-C

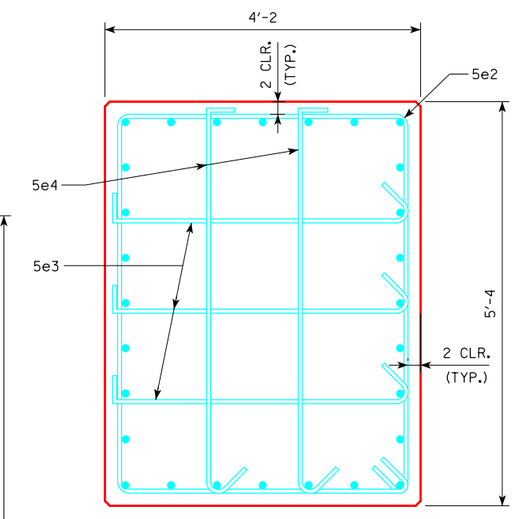

SECTION B-B

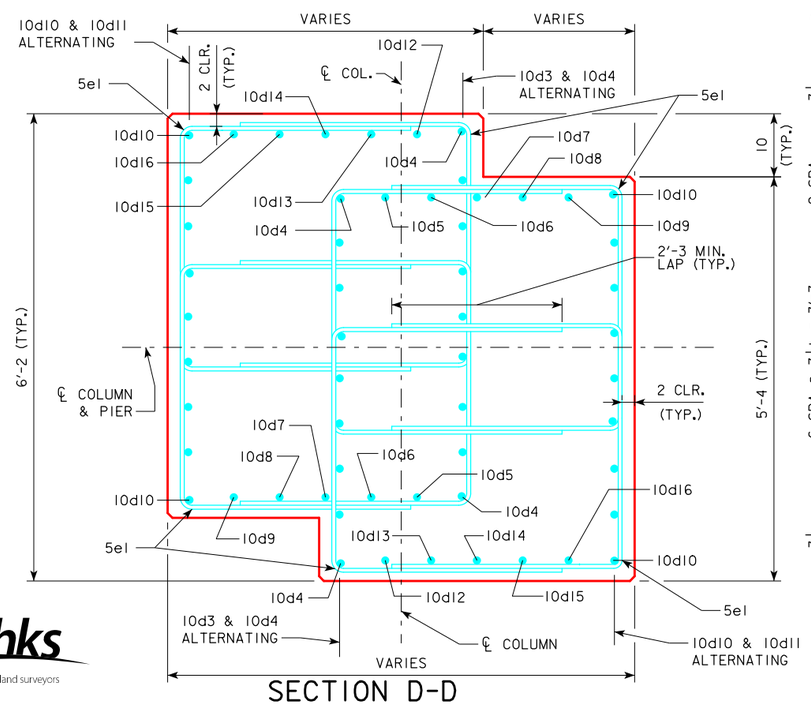

SECTION D-D

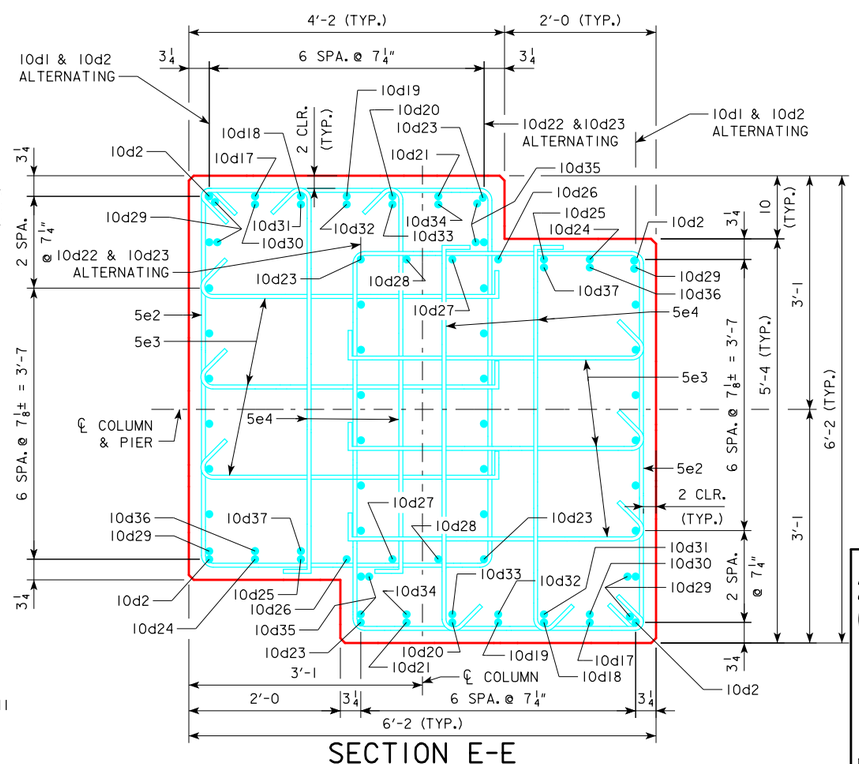

SECTION E-E

DESIGN FOR VARIABLE SKEW (L.A.)

2271'-6 x VARI. CONTINUOUS WELDED GIRDER BRIDGE-EBL W/14' BIKE TRAIL

138'-10 & 151'-0 7/8 END SPANS MULTIPLE LENGTH INTERIOR SPANS

PIER 17 DETAILS

STA. 6792+60.93 - 52' LEFT ℄ I-74 OCTOBER, 2015

SCOTT COUNTY

IOWA DEPARTMENT OF TRANSPORTATION - HIGHWAY DIVISION

DESIGN SHEET NO. 23 OF 282 FILE NO. 30253 DESIGN NO. 3408

whks engineers + planners + land surveyors

DESIGN TEAM RE / TA / JS	SCOTT COUNTY	PROJECT NUMBER BRFIM-074-1(200)5--05-82	SHEET NUMBER 24

NON COATED REINFORCING BAR LIST - PIER 17

	BAR	LOCATION	SHAPE	NO.	LENGTH	WEIGHT
	11a1-17	CAP, LONGITUDINAL-TOP		78	44'-4	18,372
	5a3-17	CAP, LONGITUDINAL-SIDE		20	55'-6	1,158
	5a5-17	CAP, ENDS		18	10'-3	192
	10b1-17	CAP, LONGITUDINAL-BOTTOM		52	56'-0	12,530
	5c1-17	CAP, STIRRUP		326	19'-2	6,517
	5c2-17	CAP, STIRRUP-END		4	16'-0	67
	5c3-17	CAP, STIRRUP-END		4	12'-10	54
	5c4-17	LET-DOWN PEDESTAL, VERTICAL		7	VARIES	24
	5c5-17	LET-DOWN PEDESTAL, VERTICAL		8	14'-3	119
	5c6-17	LET-DOWN PEDESTAL, ENDS, VERTICAL		4	11'-11	50
	5c7-17	LET-DOWN PEDESTAL, ENDS, HORIZONTAL		14	5'-0	73
	5c8-17	LET-DOWN PEDESTAL, ENDS, VERTICAL		4	12'-2	51
	5c9-17	LET-DOWN PEDESTAL, VERTICAL		7	VARIES	25
	5c10-17	LET-DOWN PEDESTAL, HORIZONTAL		10	14'-8	153
	5c11-17	LET-DOWN PEDESTAL, HORIZONTAL		6	VARIES	56
	5c12-17	LET-DOWN PEDESTAL, HORIZONTAL		4	4'-8	19
	5c13-17	LET-DOWN PEDESTAL, VERTICAL		1	14'-2	15
	5c14-17	LET-DOWN PEDESTAL, VERTICAL		1	14'-8	15
	10d1-17	COLUMN VERTICAL TO FOOTING		24	23'-6	2,427
	10d2-17	COLUMN VERTICAL TO FOOTING		30	27'-7	3,561
*	10d3-17	COLUMN VERTICAL		24	31'-2	3,219
*	10d4-17	COLUMN VERTICAL		30	27'-2	3,507
*	10d5-17	COLUMN VERTICAL		6	31'-3	807
*	10d6-17	COLUMN VERTICAL		6	27'-2	701
*	10d7-17	COLUMN VERTICAL		6	31'-2	805
*	10d8-17	COLUMN VERTICAL		6	27'-2	701
*	10d9-17	COLUMN VERTICAL		6	31'-1	803
*	10d10-17	COLUMN VERTICAL		30	27'-0	3,485
*	10d11-17	COLUMN VERTICAL		24	31'-0	3,201
*	10d12-17	COLUMN VERTICAL		6	31'-3	807
*	10d13-17	COLUMN VERTICAL		6	27'-2	701
*	10d14-17	COLUMN VERTICAL		6	31'-2	805
*	10d15-17	COLUMN VERTICAL		6	27'-2	701
*	10d16-17	COLUMN VERTICAL		6	31'-1	803
	10d17-17	COLUMN VERTICAL TO FOOTING		6	23'-6	607
	10d18-17	COLUMN VERTICAL TO FOOTING		6	27'-7	712
	10d19-17	COLUMN VERTICAL TO FOOTING		6	23'-6	607
	10d20-17	COLUMN VERTICAL TO FOOTING		6	27'-7	712
	10d21-17	COLUMN VERTICAL TO FOOTING		6	23'-6	607
	10d22-17	COLUMN VERTICAL TO FOOTING		24	23'-6	2,427
	10d23-17	COLUMN VERTICAL TO FOOTING		30	27'-7	3,561
	10d24-17	COLUMN VERTICAL TO FOOTING		6	23'-6	607
	10d25-17	COLUMN VERTICAL TO FOOTING		6	27'-7	712
	10d26-17	COLUMN VERTICAL TO FOOTING		6	23'-6	607
	10d27-17	COLUMN VERTICAL TO FOOTING		6	27'-7	712
	10d28-17	COLUMN VERTICAL TO FOOTING		6	23'-6	607
	10d29-17	COLUMN VERTICAL TO FOOTING		18	23'-6	1,820
	10d30-17	COLUMN VERTICAL TO FOOTING		6	23'-6	607
	10d31-17	COLUMN VERTICAL TO FOOTING		6	23'-6	607
	10d32-17	COLUMN VERTICAL TO FOOTING		6	23'-6	607
	10d33-17	COLUMN VERTICAL TO FOOTING		6	23'-6	607
	10d34-17	COLUMN VERTICAL TO FOOTING		6	23'-6	607
	10d35-17	COLUMN VERTICAL TO FOOTING		12	23'-6	1,213
	10d36-17	COLUMN VERTICAL TO FOOTING		6	23'-6	607
	10d37-17	COLUMN VERTICAL TO FOOTING		6	23'-6	607
	5e1-17	COLUMN STIRRUP		1344	9'-3	12,967
	5e2-17	COLUMN STIRRUP, TOP & BOTT. OF COLUMN		402	20'-1	8,421
	5e3-17	COLUMN TIE		1206	6'-4	7,966
	5e4-17	COLUMN TIE		804	7'-6	6,289
	5f1-17	FOOTING, TOP - TRANSVERSE		45	14'-0	657
	5f2-17	FOOTING, TOP - LONGITUDINAL		45	14'-0	657
	9g1-17	FOOTING, BOTTOM - TRANSVERSE		102	14'-0	4,855
	9g2-17	FOOTING, BOTTOM - LONGITUDINAL		102	14'-0	4,855
	5m2-17	STEP, LONGITUDINAL BAR		24	3'-8	92
	5n1-17	STEP, TRANSVERSE HAIRPIN		96	9'-9	976
	5n3-17	STEP, TIE		14	15'-8	229
		REINFORCING STEEL - NON-COATED - TOTAL (LBS.)				134,248

whks
engineers + planners + land surveyors

NOTE:
DESIGNATION "-17" SIGNIFIES BAR ASSOCIATED WITH PIER 17 OF THE EASTBOUND DESIGN NO. 3408 BRIDGE

BENT BAR DETAILS

d1 -d37 TABLE

BAR	A	B	C	D	E	F	R
10d1-17	20'-2	1'-6	1 1/2	10 3/4	1'-6	1'-10	63'-7 1/8
10d2-17	20'-2	5'-6	4 1/8	10 3/4	5'-6 1/8	1'-10	63'-7 1/8
10d3-17	-	28'-10 1/4	7'-1 1/2	10 3/4	29'-8 3/4	1'-5	59'-11 5/8
10d4-17	-	25'-2 1/2	5'-4 3/8	10 3/4	25'-8 3/4	1'-5	59'-11 5/8
10d5-17	-	28'-7 1/8	7'-3 1/8	10 3/4	29'-9 3/4	1'-5	60'-6 7/8
10d6-17	-	24'-11 7/8	5'-5 1/8	10 3/4	25'-8 7/8	1'-5	61'-2 1/8
10d7-17	-	28'-7 1/8	7'-1 1/8	10 3/4	29'-8 5/8	1'-5	61'-9 3/8
10d8-17	-	24'-11 5/8	5'-3 5/8	10 3/4	25'-8 1/4	1'-5	62'-4 5/8
10d9-17	-	28'-7	6'-11 1/4	10 3/4	29'-8	1'-5	62'-11 7/8
10d10-17	-	25'-1 5/8	5'-0 1/8	10 3/4	25'-6 3/4	1'-5	63'-7 1/8
10d11-17	-	28'-9 3/4	6'-8	10 3/4	29'-6 3/4	1'-5	63'-7 1/8
10d12-17	-	28'-7 1/8	7'-3 1/8	10 3/4	29'-9 3/8	1'-5	60'-6 7/8
10d13-17	-	24'-11 7/8	5'-5 1/8	10 3/4	25'-8 7/8	1'-5	61'-2 1/8
10d14-17	-	28'-7 1/8	7'-1 1/8	10 3/4	29'-8 5/8	1'-5	61'-9 3/8
10d15-17	-	24'-11 5/8	5'-3 5/8	10 3/4	25'-8 1/4	1'-5	62'-4 5/8
10d16-17	-	28'-7	6'-11 1/4	10 3/4	29'-8	1'-5	62'-11 7/8
10d17-17	20'-2	1'-6	1 1/2	10 3/4	1'-6	1'-10	62'-11 7/8
10d18-17	20'-2	5'-6	4 1/8	10 3/4	5'-6 1/8	1'-10	62'-4 5/8
10d19-17	20'-2	1'-6	1 1/2	10 3/4	1'-6	1'-10	61'-9 3/8
10d20-17	20'-2	5'-6	4 1/4	10 3/4	5'-6 1/8	1'-10	61'-2 1/8
10d21-17	20'-2	1'-6	1 1/2	10 3/4	1'-6	1'-10	60'-6 7/8
10d22-17	20'-2	1'-6	1 1/2	10 3/4	1'-6	1'-10	59'-11 5/8
10d23-17	20'-2	5'-6	4 1/4	10 3/4	5'-6 1/8	1'-10	59'-11 5/8
10d24-17	20'-2	1'-6	1 1/2	10 3/4	1'-6	1'-10	62'-11 7/8
10d25-17	20'-2	5'-6	4 1/8	10 3/4	5'-6 1/8	1'-10	62'-4 5/8
10d26-17	20'-2	1'-6	1 1/2	10 3/4	1'-6	1'-10	61'-9 3/8
10d27-17	20'-2	5'-6	4 1/4	10 3/4	5'-6 1/8	1'-10	61'-2 1/8
10d28-17	20'-2	1'-6	1 1/2	10 3/4	1'-6	1'-10	60'-6 7/8
10d29-17	20'-2	1'-6	1 1/2	10 3/4	1'-6	1'-10	63'-7 1/8
10d30-17	20'-2	1'-6	1 1/2	10 3/4	1'-6	1'-10	62'-11 7/8
10d31-17	20'-2	1'-6	1 1/2	10 3/4	1'-6	1'-10	62'-4 5/8
10d32-17	20'-2	1'-6	1 1/2	10 3/4	1'-6	1'-10	61'-9 3/8
10d33-17	20'-2	1'-6	1 1/2	10 3/4	1'-6	1'-10	61'-2 1/8
10d34-17	20'-2	1'-6	1 1/2	10 3/4	1'-6	1'-10	60'-6 7/8
10d35-17	20'-2	1'-6	1 1/2	10 3/4	1'-6	1'-10	59'-11 5/8
10d36-17	20'-2	1'-6	1 1/2	10 3/4	1'-6	1'-10	62'-11 7/8
10d37-17	20'-2	1'-6	1 1/2	10 3/4	1'-6	1'-10	62'-4 5/8

'R' IS THE INSIDE OF RADIUS OF REBAR. DIMENSION 'C' IS APPROX.

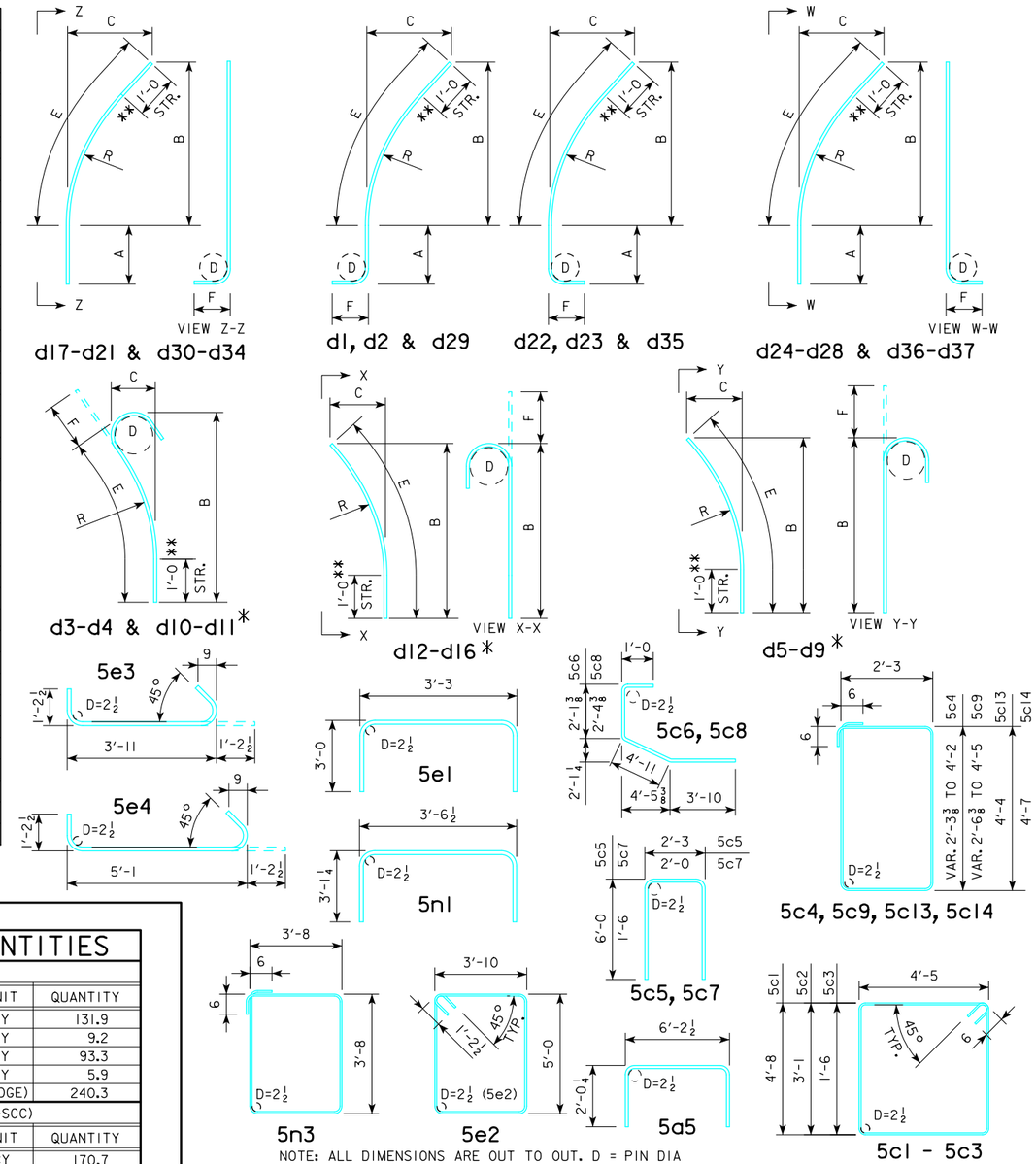

STRUCT. CONCRETE PLACEMENT QUANTITIES

STRUCTURAL CONCRETE (BRIDGE)

LOCATION	UNIT	QUANTITY
CAP	CY	131.9
PEDESTALS	CY	9.2
FOOTING	CY	93.3
LET-DOWN PEDESTAL	CY	5.9
TOTAL STRUCTURAL CONCRETE (BRIDGE)		240.3

HIGH PERFORMANCE SELF-CONSOLIDATING CONCRETE (HP-SCC)

LOCATION	UNIT	QUANTITY
COLUMN	CY	170.7
TOTAL HIGH PERFORMANCE SELF-CONSOLIDATING CONC. (HP-SCC)		170.7

ESTIMATED QUANTITIES

ITEM	UNIT	TOTAL
EXCAVATION, CL 20	CY	402
EXCAVATION, CL 22	CY	121
STRUCTURAL CONCRETE (BRIDGE)	CY	240.3
REINFORCING STEEL	LB	134,248
HP SELF-CONSOLIDATING CONCRETE (HP-SCC)	CY	170.7

NOTE:
THE LENGTHS SHOWN FOR COLUMN VERTICAL BARS ARE TO THE CENTER OF THE MECHANICAL SPLICE. ADJUSTMENTS TO THE COLUMN BAR LENGTHS MAY BE REQUIRED DEPENDING ON THE SPLICE MECHANISM USED.

* d3 THRU d16 BARS MAY BE SUBSTITUTED WITH d38 & dXX BARS CONNECTED WITH A MECHANICAL BAR SPLICER. SEE DESIGN SHEET 20.

** 1'-0 END PORTION OF BAR TO BE STRAIGHT FOR CONNECTION OF MECHANICAL BAR SPLICER.

DESIGN FOR VARIABLE SKEW (L.A.)

2271'-6 x VARI. CONTINUOUS WELDED GIRDER BRIDGE-EBL W/14' BIKE TRAIL

138'-10 & 151'-0 7/8 END SPANS MULTIPLE LENGTH INTERIOR SPANS

PIER 17 DETAILS

STA. 6792+60.93 - 52' LEFT ℄ I-74 OCTOBER, 2015

SCOTT COUNTY

IOWA DEPARTMENT OF TRANSPORTATION - HIGHWAY DIVISION

DESIGN SHEET NO. 24 OF 282 FILE NO. 30253 DESIGN NO. 3408

BENCH MARK NO. 500: STA. 6781+18.92 LT. 161.19'
ELEV. 575.797, CHISELED "X" IN BOLT E. SIDE
CONCRETE STRUCTURE

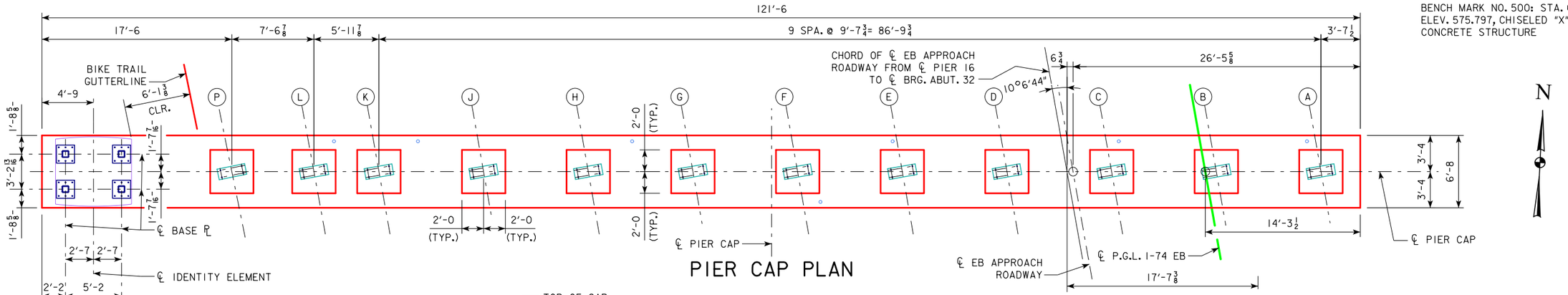

PIER CAP PLAN

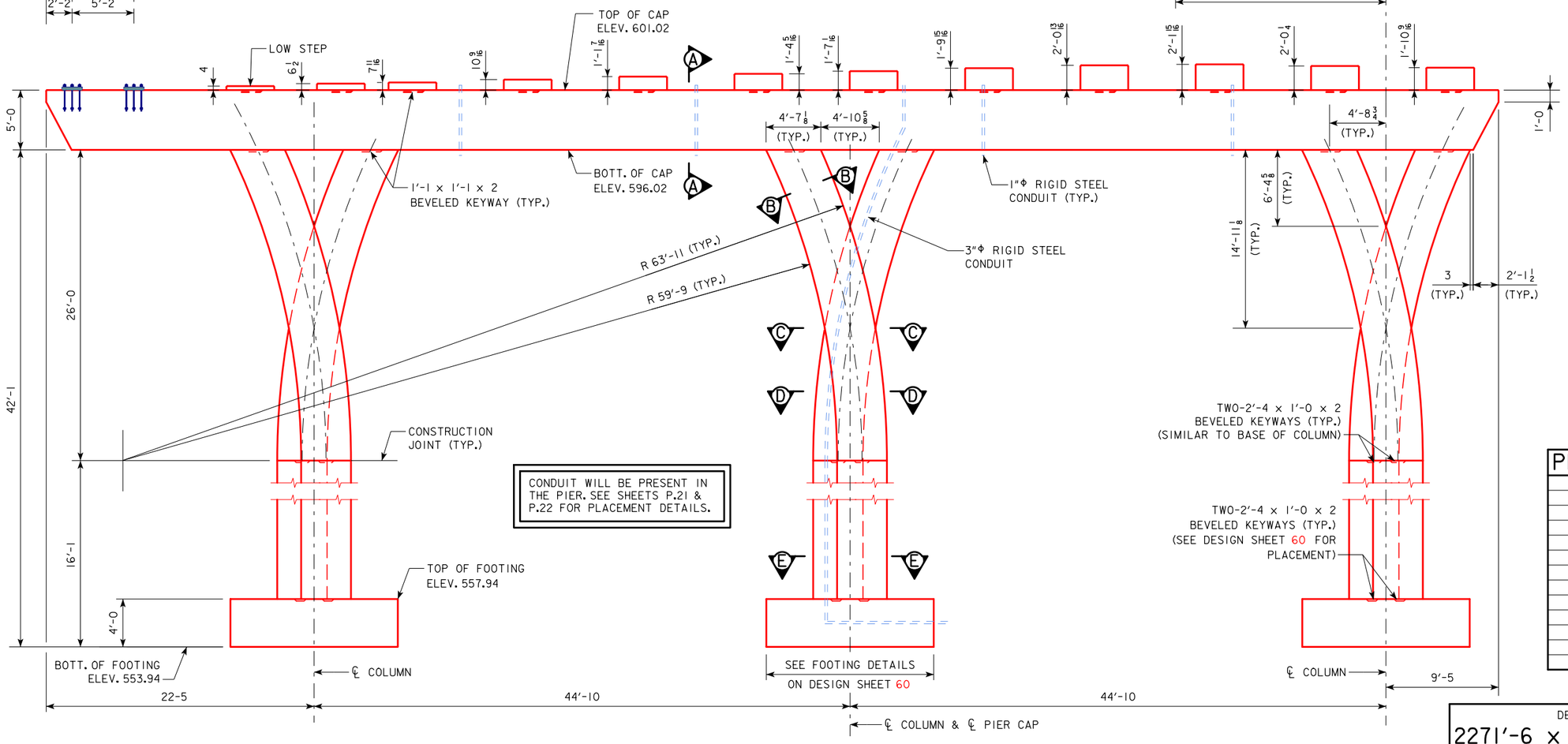

CONDUIT WILL BE PRESENT IN THE PIER. SEE SHEETS P.21 & P.22 FOR PLACEMENT DETAILS.

PIER ELEVATION
(LOOKING UPSTATION)

PEDESTAL ELEV.	
GIRDER	ELEVATION
A	602.90
B	603.04
C	603.18
D	603.09
E	602.85
F	602.61
G	602.38
H	602.14
J	601.90
K	601.66
L	601.56
P	601.35

NOTES:
SEE DESIGN SHEET 20 FOR PIER NOTES.
SEE DESIGN SHEET 21 FOR PIER CAP KEYWAY DETAILS.
SEE DESIGN SHEET 27 FOR SECTIONS A-A, B-B, C-C, D-D, & E-E.
SEE DESIGN SHEET 60 FOR FOOTING DIMENSIONS.
SEE DESIGN SHEET 56 FOR ANCHOR BOLT LAYOUT.
SEE DESIGN SHEET 60 FOR COLUMN KEYWAY DETAILS.
SEE DESIGN SHEET 26 FOR IDENTITY ELEMENT ANCHORAGE DETAILS.

whks
engineers + planners + land surveyors

DESIGN FOR VARIABLE SKEW (L.A.)
2271'-6 x VARI. CONTINUOUS WELDED GIRDER BRIDGE-EBL W/14' BIKE TRAIL
138'-10 & 151'-0 7/8 END SPANS MULTIPLE LENGTH INTERIOR SPANS
PIER 18 DETAILS
STA. 6792+60.93 - 52' LEFT ℄ I-74 OCTOBER, 2015
SCOTT COUNTY
IOWA DEPARTMENT OF TRANSPORTATION - HIGHWAY DIVISION
DESIGN SHEET NO. 25 OF 282 FILE NO. 30253 DESIGN NO. 3408

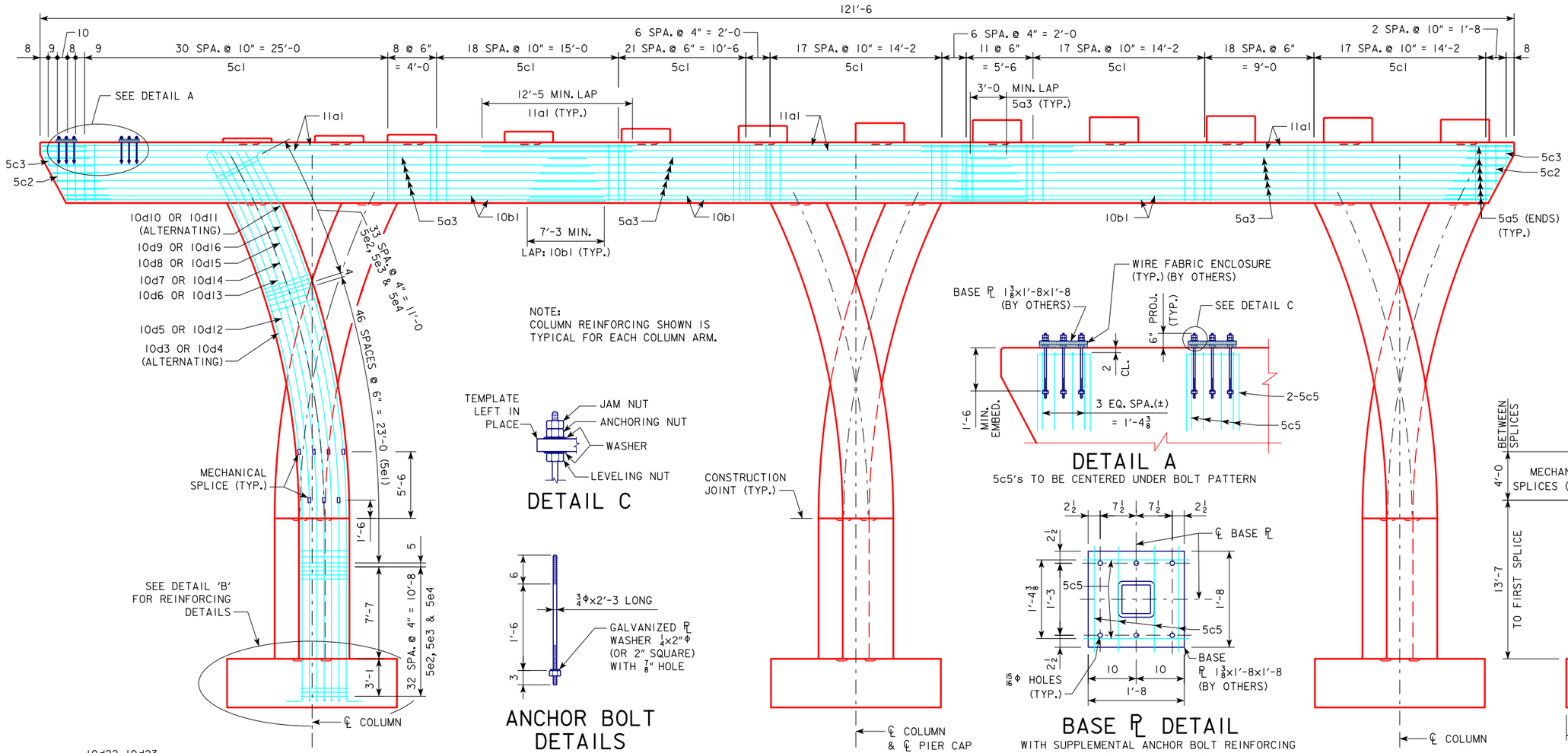

NOTE:
COLUMN REINFORCING SHOWN IS TYPICAL FOR EACH COLUMN ARM.

DETAIL C

ANCHOR BOLT DETAILS

PIER 18 ELEVATION
(LOOKING UPSTATION)

DETAIL A
5c5's TO BE CENTERED UNDER BOLT PATTERN

BASE PL DETAIL
WITH SUPPLEMENTAL ANCHOR BOLT REINFORCING
(FOR ANCHOR BOLT LAYOUT INFORMATION ONLY)
5c5's TO BE CENTERED UNDER BOLT PATTERN

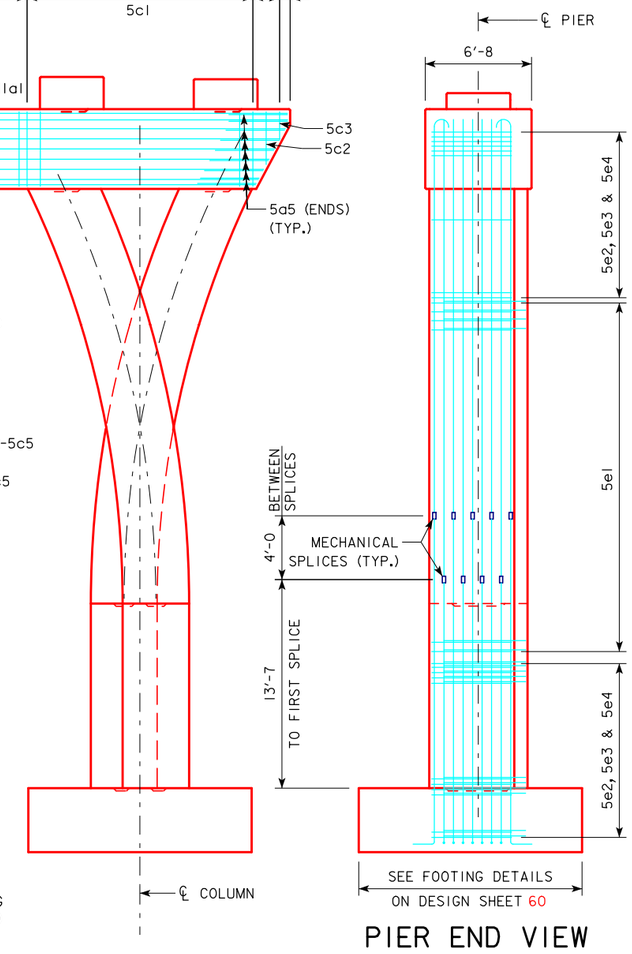

PIER END VIEW

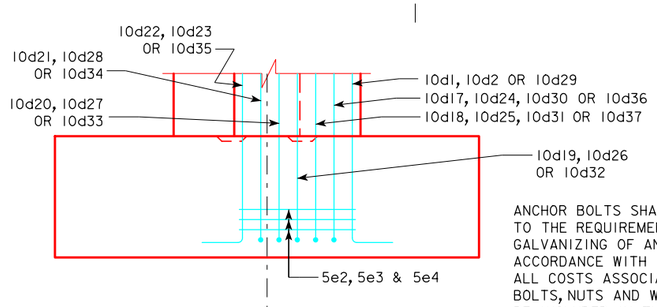

DETAIL 'B'

ANCHOR BOLTS SHALL BE ¾"Φ ASTM F-1554 GRADE 55 AND SHALL CONFORM TO THE REQUIREMENTS OF I.M. 453.08.
GALVANIZING OF ANCHOR BOLTS, NUTS AND WASHERS SHALL BE IN ACCORDANCE WITH I.M. 453.08.
ALL COSTS ASSOCIATED WITH FURNISHING AND INSTALLING THE ANCHOR BOLTS, NUTS AND WASHERS FOR THE IDENTITY ELEMENT ON PIER 18 SHALL BE INCLUDED IN THE PRICE BID FOR "STRUCTURAL CONCRETE".

BASE PLATES AND WIRE FABRIC MATERIAL SHALL BE INCLUDED IN IDENTITY ELEMENT, TO BE CONSTRUCTED BY OTHERS. NUTS AND WASHERS SHALL BE HAND-TIGHTENED ON ANCHOR BOLT PROJECTIONS, FOR FUTURE USE WHEN IDENTITY ELEMENTS ARE INSTALLED.

THE CONTRACTOR SHALL TAKE CARE TO SECURE ANCHOR BOLTS PLUMB AND IN THE CORRECT LOCATION. THE CONTRACTOR SHALL LEAVE THE TEMPLATE, USED TO SET THE ANCHOR BOLTS, IN PLACE TO PROTECT THE ANCHOR BOLTS UNTIL THE IDENTITY ELEMENT IS INSTALLED BY OTHERS.

NOTES:
SEE DESIGN SHEET 20 FOR PIER NOTES.

SEE DESIGN SHEET 28 FOR BENT BAR DETAILS.

MECHANICAL SPLICES SHALL BE PROVIDED FOR 10d BARS, ALTERNATE BARS BEING SPLICED, SUCH THAT NO MORE THAN HALF OF THE 10d BARS ARE SPLICED AT ONE LOCATION. SPACE SPLICE LOCATIONS AT 4'-0 MINIMUM ALONG ℄ OF COLUMN.

THE MECHANICAL SPLICES USED SHALL MEET THE REQUIREMENTS OF MATERIALS I.M.451, APPENDIX E.

THE COST OF ALL MECHANICAL SPLICES IS TO BE INCLUDED IN THE PRICE BID FOR "REINFORCING STEEL" AND NO SEPARATE PAYMENT WILL BE MADE. THE WEIGHT OF THE MECHANICAL SPLICES IS NOT INCLUDED IN THE QUANTITY SHOWN ON DES. SH. 28 FOR "REINFORCING STEEL". A TOTAL OF 168 MECHANICAL SPLICES WILL BE REQUIRED AT PIER 18.

SEE DESIGN SHEET 60 FOR FOOTING REINFORCEMENT DETAILS.

whks
engineers + planners + land surveyors

DESIGN FOR VARIABLE SKEW (L.A.)

2271'-6 x VARI. CONTINUOUS WELDED GIRDER BRIDGE-EBL W/14' BIKE TRAIL

138'-10 & 151'-0⅞ END SPANS MULTIPLE LENGTH INTERIOR SPANS

PIER 18 DETAILS

STA. 6792+60.93 - 52' LEFT ℄ I-74 OCTOBER, 2015

SCOTT COUNTY

IOWA DEPARTMENT OF TRANSPORTATION - HIGHWAY DIVISION

DESIGN SHEET NO. 26 OF 282 FILE NO. 30253 DESIGN NO. 3408

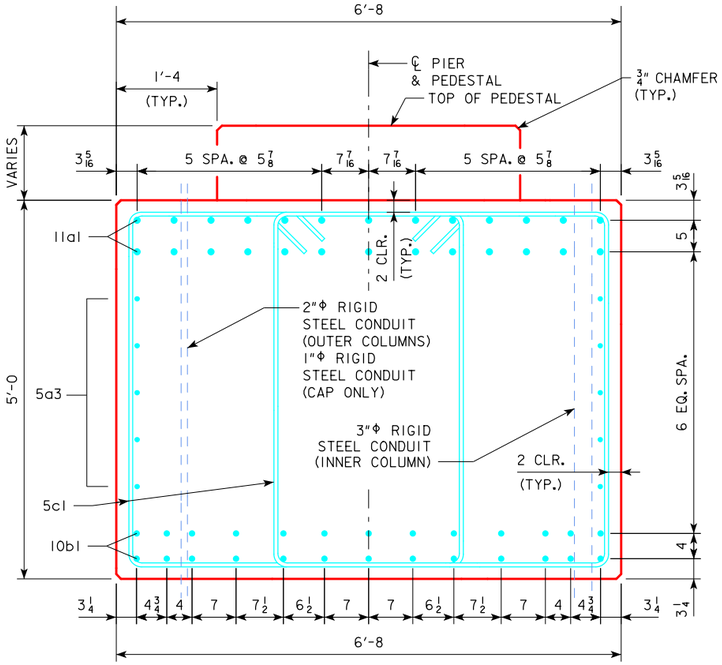

SECTION A-A

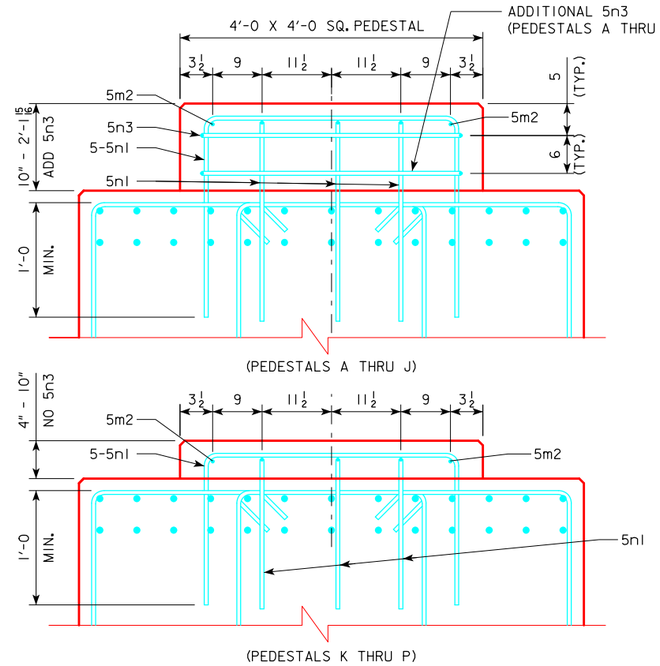

PEDESTAL REINFORCING DETAILS

NOTES:
SEE DESIGN SHEET 20 FOR PIER NOTES.

SEE DESIGN SHEET 28 FOR BENT BAR DETAILS.

FOR LOCATIONS OF SECTIONS A-A, B-B, C-C, D-D & E-E, SEE DESIGN SHEET 25.

ALTERNATE DIRECTION OF 5e3 & 5e4 CROSS TIES SUCH THAT 135° AND 90° HOOKS SWITCH ENDS AT EACH VERTICAL LAYER AND MAINTAIN A MINIMUM OF 1 1/2" CLEAR COVER TO TIES.

10d29 THRU 10d37 BARS ARE SHOWN BUNDLED VERTICALLY FOR CLARITY. ACTUAL BUNDLE ORIENTATION SHALL BE SIDE BY SIDE.

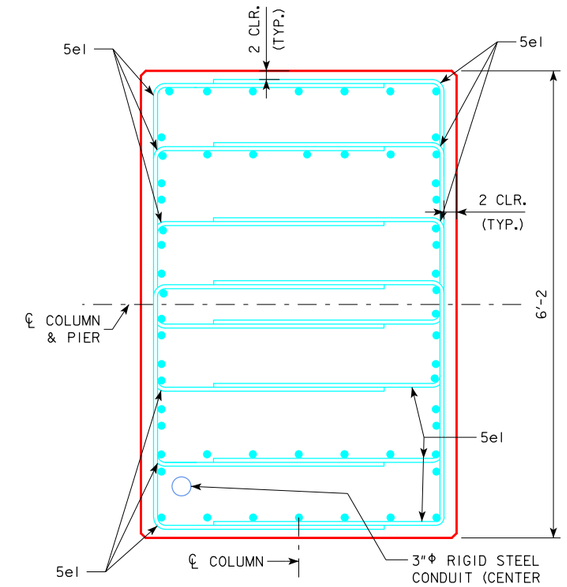

SECTION C-C

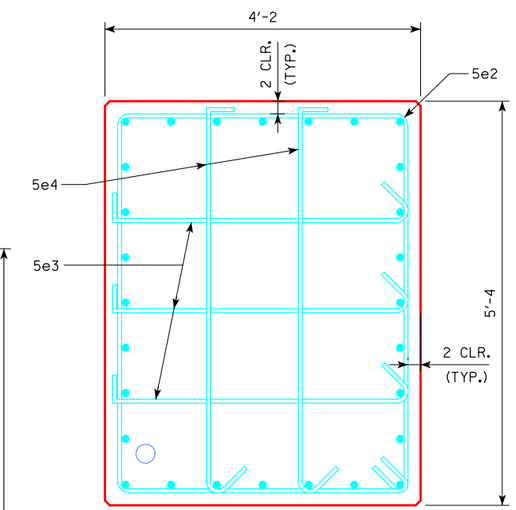

SECTION B-B

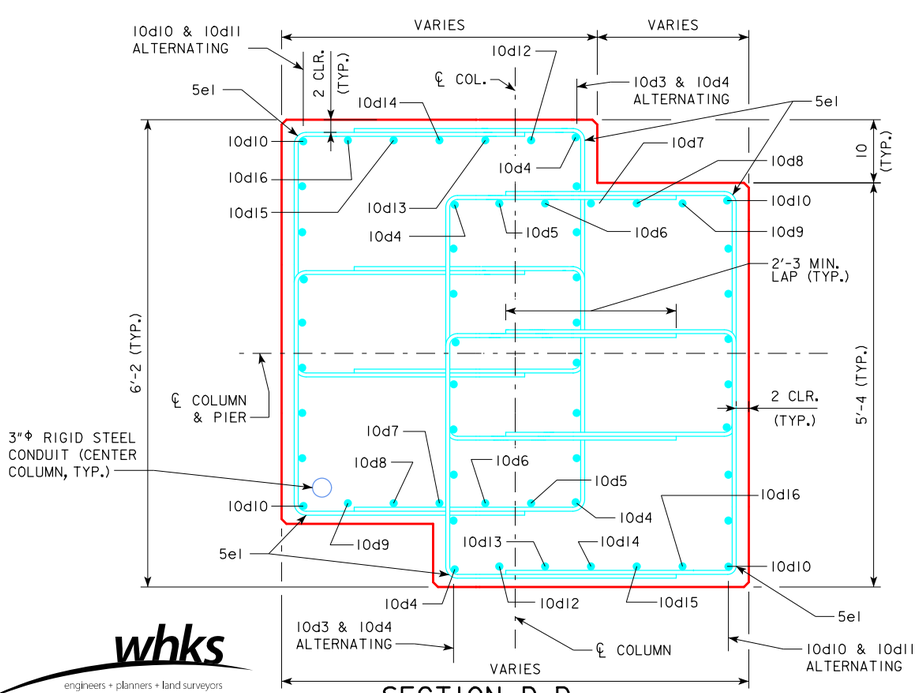

SECTION D-D

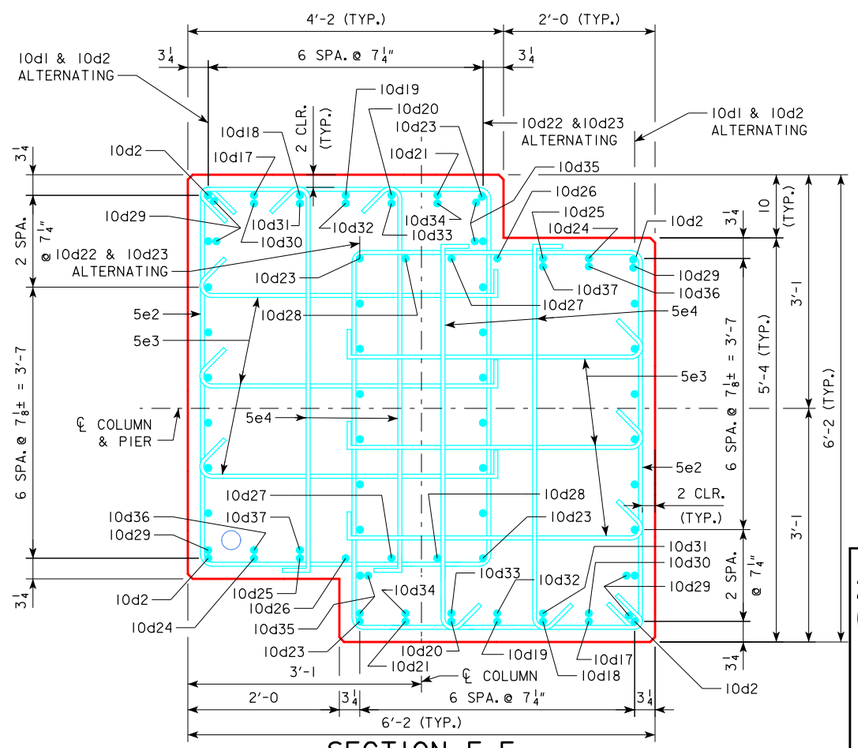

SECTION E-E

DESIGN FOR VARIABLE SKEW (L.A.)

2271'-6 x VARI. CONTINUOUS WELDED GIRDER BRIDGE-EBL W/14' BIKE TRAIL

138'-10 & 151'-0 7/8 END SPANS MULTIPLE LENGTH INTERIOR SPANS

PIER 18 DETAILS

STA. 6792+60.93 - 52' LEFT ℄ I-74 OCTOBER, 2015

SCOTT COUNTY

IOWA DEPARTMENT OF TRANSPORTATION - HIGHWAY DIVISION

DESIGN SHEET NO. 27 OF 282 FILE NO. 30253 DESIGN NO. 3408

whks engineers + planners + land surveyors

DESIGN TEAM RE / TA / JS	SCOTT COUNTY	PROJECT NUMBER BRFIM-074-1(200)5--05-82	SHEET NUMBER 28

BENT BAR DETAILS

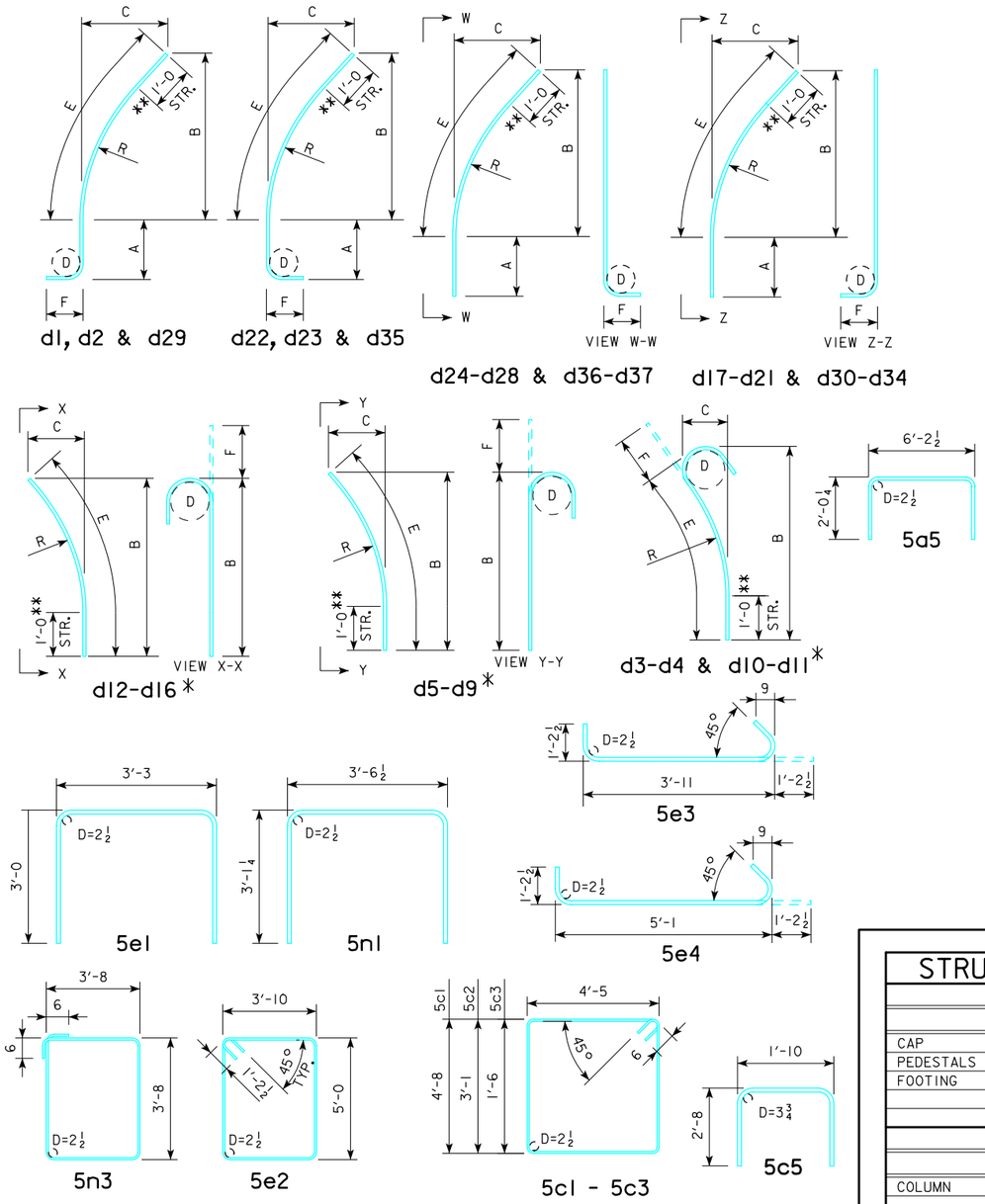

NOTE: ALL DIMENSIONS ARE OUT TO OUT. D = PIN DIA.

d1 - d37 TABLE							
BAR	A	B	C	D	E	F	R
10d1-18	15'-8	1'-6	1½	10¾	1'-6	1'-10	63'-7⅛
10d2-18	15'-8	5'-6	4⅛	10¾	5'-6⅛	1'-10	63'-7⅛
10d3-18	-	28'-10¼	7'-1½	10¾	29'-8¾	1'-5	59'-11⅝
10d4-18	-	25'-2½	5'-4⅜	10¾	25'-8¾	1'-5	59'-11⅝
10d5-18	-	28'-7⅛	7'-3⅛	10¾	29'-9⅜	1'-5	60'-6⅞
10d6-18	-	24'-11⅞	5'-5⅛	10¾	25'-8⅞	1'-5	61'-2⅛
10d7-18	-	28'-7⅛	7'-1⅛	10¾	29'-8⅝	1'-5	61'-9⅜
10d8-18	-	24'-11⅝	5'-3⅝	10¾	25'-8¼	1'-5	62'-4⅝
10d9-18	-	28'-7	6'-11¼	10¾	29'-8	1'-5	62'-11⅞
10d10-18	-	25'-1⅝	5'-0⅛	10¾	25'-6¾	1'-5	63'-7⅛
10d11-18	-	28'-9¾	6'-8	10¾	29'-6¾	1'-5	63'-7⅛
10d12-18	-	28'-7⅛	7'-3⅛	10¾	29'-9⅜	1'-5	60'-6⅞
10d13-18	-	24'-11⅞	5'-5⅛	10¾	25'-8⅞	1'-5	61'-2⅛
10d14-18	-	28'-7⅛	7'-1⅛	10¾	29'-8⅝	1'-5	61'-9⅜
10d15-18	-	24'-11⅝	5'-3⅝	10¾	25'-8¼	1'-5	62'-4⅝
10d16-18	-	28'-7	6'-11¼	10¾	29'-8	1'-5	62'-11⅞
10d17-18	15'-8	1'-6	1½	10¾	1'-6	1'-10	62'-11⅞
10d18-18	15'-8	5'-6	4⅛	10¾	5'-6⅛	1'-10	62'-4⅝
10d19-18	15'-8	1'-6	1½	10¾	1'-6	1'-10	61'-9⅜
10d20-18	15'-8	5'-6	4¼	10¾	5'-6⅛	1'-10	61'-2⅛
10d21-18	15'-8	1'-6	1½	10¾	1'-6	1'-10	60'-6⅞
10d22-18	15'-8	1'-6	1½	10¾	1'-6	1'-10	59'-11⅝
10d23-18	15'-8	5'-6	4¼	10¾	5'-6⅛	1'-10	59'-11⅝
10d24-18	15'-8	1'-6	1½	10¾	1'-6	1'-10	62'-11⅞
10d25-18	15'-8	5'-6	4⅛	10¾	5'-6⅛	1'-10	62'-4⅝
10d26-18	15'-8	1'-6	1½	10¾	1'-6	1'-10	61'-9⅜
10d27-18	15'-8	5'-6	4¼	10¾	5'-6⅛	1'-10	61'-2⅛
10d28-18	15'-8	1'-6	1½	10¾	1'-6	1'-10	60'-6⅞
10d29-18	15'-8	5'-0	3⅝	10¾	5'-0	1'-10	63'-7⅛
10d30-18	15'-8	5'-0	3⅝	10¾	5'-0	1'-10	62'-11⅞
10d31-18	15'-8	5'-0	3⅝	10¾	5'-0⅛	1'-10	62'-4⅝
10d32-18	15'-8	5'-0	3¾	10¾	5'-0⅛	1'-10	61'-9⅜
10d33-18	15'-8	5'-0	3¾	10¾	5'-0⅛	1'-10	61'-2⅛
10d34-18	15'-8	5'-0	3¾	10¾	5'-0⅛	1'-10	60'-6⅞
10d35-18	15'-8	5'-0	3¾	10¾	5'-0⅛	1'-10	59'-11⅝
10d36-18	15'-8	5'-0	3⅝	10¾	5'-0	1'-10	62'-11⅞
10d37-18	15'-8	5'-0	3⅝	10¾	5'-0⅛	1'-10	62'-4⅝

'R' IS THE INSIDE OF RADIUS OF REBAR. DIMENSION 'C' IS APPROXIMATE.

NON-COATED REINFORCING BAR LIST - PIER 18

	BAR	LOCATION	SHAPE	NO.	LENGTH	WEIGHT
	11a1-18	CAP, LONGITUDINAL-TOP		78	48'-8	20,168
	5a3-18	CAP, LONGITUDINAL-SIDE		30	42'-4	1,325
	5a5-18	CAP, ENDS		18	10'-3	192
	10b1-18	CAP, LONGITUDINAL-BOTTOM		78	44'-1	14,796
	5c1-18	CAP, STIRRUP		344	19'-2	6,877
	5c2-18	CAP, STIRRUP-END		4	16'-0	67
	5c3-18	CAP, STIRRUP-END		4	12'-10	54
	5c5-18	CAP, ANCHOR BOLT		24	7'-2	179
	10d1-18	COLUMN VERTICAL TO FOOTING		24	19'-0	1,962
	10d2-18	COLUMN VERTICAL TO FOOTING		30	23'-1	2,980
*	10d3-18	COLUMN VERTICAL		24	31'-2	3,219
*	10d4-18	COLUMN VERTICAL		30	27'-2	3,507
*	10d5-18	COLUMN VERTICAL		6	31'-3	807
*	10d6-18	COLUMN VERTICAL		6	27'-2	701
*	10d7-18	COLUMN VERTICAL		6	31'-2	805
*	10d8-18	COLUMN VERTICAL		6	27'-2	701
*	10d9-18	COLUMN VERTICAL		6	31'-1	803
*	10d10-18	COLUMN VERTICAL		30	27'-0	3,485
*	10d11-18	COLUMN VERTICAL		24	31'-0	3,201
*	10d12-18	COLUMN VERTICAL		6	31'-3	807
*	10d13-18	COLUMN VERTICAL		6	27'-2	701
*	10d14-18	COLUMN VERTICAL		6	31'-2	805
*	10d15-18	COLUMN VERTICAL		6	27'-2	701
*	10d16-18	COLUMN VERTICAL		6	31'-1	803
	10d17-18	COLUMN VERTICAL TO FOOTING		6	19'-0	491
	10d18-18	COLUMN VERTICAL TO FOOTING		6	23'-1	596
	10d19-18	COLUMN VERTICAL TO FOOTING		6	19'-0	491
	10d20-18	COLUMN VERTICAL TO FOOTING		6	23'-1	596
	10d21-18	COLUMN VERTICAL TO FOOTING		6	19'-0	491
	10d22-18	COLUMN VERTICAL TO FOOTING		24	19'-0	1,962
	10d23-18	COLUMN VERTICAL TO FOOTING		30	23'-1	2,980
	10d24-18	COLUMN VERTICAL TO FOOTING		6	19'-0	491
	10d25-18	COLUMN VERTICAL TO FOOTING		6	23'-1	596
	10d26-18	COLUMN VERTICAL TO FOOTING		6	19'-0	491
	10d27-18	COLUMN VERTICAL TO FOOTING		6	23'-1	596
	10d28-18	COLUMN VERTICAL TO FOOTING		6	19'-0	491
	10d29-18	COLUMN VERTICAL TO FOOTING		18	22'-7	1,749
	10d30-18	COLUMN VERTICAL TO FOOTING		6	22'-7	583
	10d31-18	COLUMN VERTICAL TO FOOTING		6	22'-7	583
	10d32-18	COLUMN VERTICAL TO FOOTING		6	22'-7	583
	10d33-18	COLUMN VERTICAL TO FOOTING		6	22'-7	583
	10d34-18	COLUMN VERTICAL TO FOOTING		6	22'-7	583
	10d35-18	COLUMN VERTICAL TO FOOTING		12	22'-7	1,166
	10d36-18	COLUMN VERTICAL TO FOOTING		6	22'-7	583
	10d37-18	COLUMN VERTICAL TO FOOTING		6	22'-7	583
	5e1-18	COLUMN STIRRUP		1128	9'-3	10,883
	5e2-18	COLUMN STIRRUP, TOP & BOTT. OF COLUMN		402	20'-1	8,421
	5e3-18	COLUMN TIE		1206	6'-4	7,966
	5e4-18	COLUMN TIE		804	7'-6	6,289
	5f1-18	FOOTING, TOP - TRANSVERSE		45	14'-0	657
	5f2-18	FOOTING, TOP - LONGITUDINAL		45	14'-0	657
	9g1-18	FOOTING, BOTTOM - TRANSVERSE		102	14'-0	4,855
	9g2-18	FOOTING, BOTTOM - LONGITUDINAL		102	14'-0	4,855
	5m2-18	STEP, LONGITUDINAL BAR		24	3'-8	92
	5n1-18	STEP, TRANSVERSE HAIRPIN		96	9'-9	976
	5n3-18	STEP, TIE		15	15'-8	245
		REINFORCING STEEL - NON-COATED - TOTAL (LBS.)				132,810

STRUCT. CONCRETE PLACEMENT QUANTITIES

STRUCTURAL CONCRETE (BRIDGE)		
LOCATION	UNIT	QUANTITY
CAP	CY	147.9
PEDESTALS	CY	9.7
FOOTING	CY	93.3
TOTAL STRUCTURAL CONCRETE (BRIDGE)		250.9
HIGH PERFORMANCE SELF-CONSOLIDATING CONCRETE (HP-SCC)		
LOCATION	UNIT	QUANTITY
COLUMN	CY	153.3
TOTAL HIGH PERFORMANCE SELF-CONSOLIDATING CONC. (HP-SCC)		153.3

ESTIMATED QUANTITIES

ITEM	UNIT	TOTAL
EXCAVATION, CL 20	CY	416
EXCAVATION, CL 22	CY	68
STRUCTURAL CONCRETE (BRIDGE)	CY	250.9
REINFORCING STEEL	LB	132,810
HP SELF-CONSOLIDATING CONCRETE (HP-SCC)	CY	153.3

NOTE:
THE LENGTHS SHOWN FOR COLUMN VERTICAL BARS ARE TO THE CENTER OF THE MECHANICAL SPLICE. ADJUSTMENTS TO THE COLUMN BAR LENGTHS MAY BE REQUIRED DEPENDING ON THE SPLICE MECHANISM USED.

* d3 THRU d16 BARS MAY BE SUBSTITUTED WITH d38 & dXX BARS CONNECTED WITH A MECHANICAL BAR SPLICER. SEE DESIGN SHEET 20.

** 1'-0 END PORTION OF BAR TO BE STRAIGHT FOR CONNECTION OF MECHANICAL BAR SPLICER.

NOTE:
DESIGNATION "-18" SIGNIFIES BAR ASSOCIATED WITH PIER 18 OF THE EASTBOUND DESIGN NO. 3408 BRIDGE

whks
engineers + planners + land surveyors

DESIGN FOR VARIABLE SKEW (L.A.)

227'-6 x VARI. CONTINUOUS WELDED GIRDER BRIDGE-EBL W/14' BIKE TRAIL

138'-10 & 151'-0⅞ END SPANS MULTIPLE LENGTH INTERIOR SPANS

PIER 18 DETAILS

STA. 6792+60.93 - 52' LEFT ℄ I-74 OCTOBER, 2015

SCOTT COUNTY

IOWA DEPARTMENT OF TRANSPORTATION - HIGHWAY DIVISION

DESIGN SHEET NO. 28 OF 282 FILE NO. 30253 DESIGN NO. 3408

BENCH MARK NO. 500: STA. 6781+18.92 LT. 161.19'
ELEV. 575.797, CHISELED "X" IN BOLT E. SIDE
CONCRETE STRUCTURE

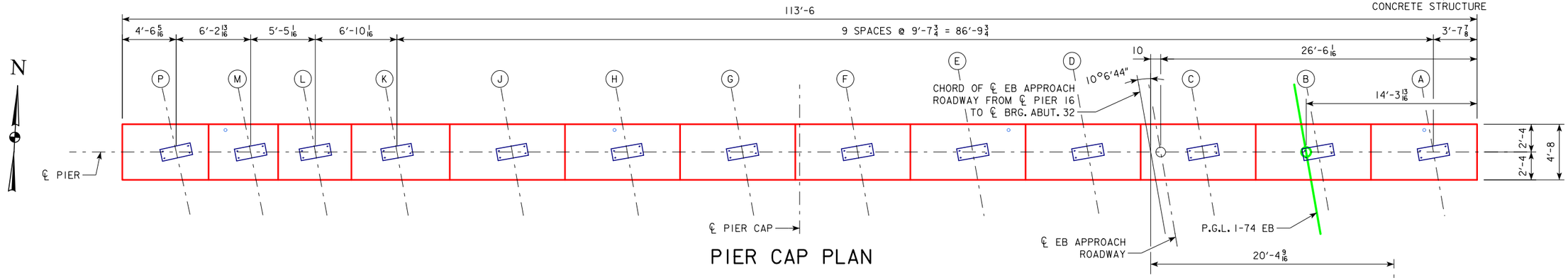

PIER CAP PLAN

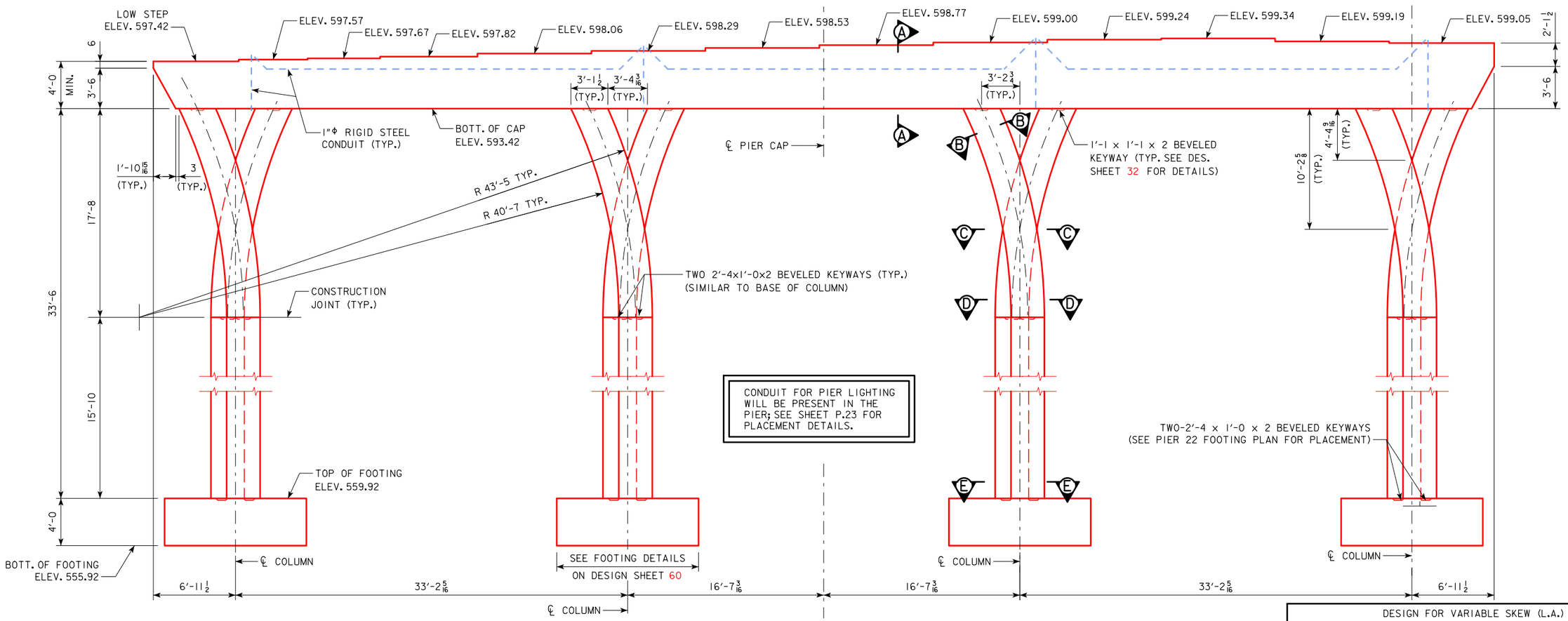

PIER ELEVATION
(LOOKING UPSTATION)

NOTES:
SEE DESIGN SHEET 20 FOR PIER NOTES.
SEE DESIGN SHEET 31 FOR SECTIONS A-A, B-B, C-C, D-D, & E-E.
SEE DESIGN SHEET 32 FOR STEP SPACING.
SEE DESIGN SHEET 32 FOR PIER CAP KEYWAY DETAILS.
SEE DESIGN SHEET 60 FOR FOOTING DIMENSIONS.
SEE DESIGN SHEET 56 FOR ANCHOR BOLT LAYOUT.
SEE DESIGN SHEET 60 FOR COLUMN KEYWAY DETAILS.

whks
engineers + planners + land surveyors

DESIGN FOR VARIABLE SKEW (L.A.)
2271'-6 x VARI. CONTINUOUS WELDED GIRDER BRIDGE-EBL W/14' BIKE TRAIL
138'-10 & 151'-0 7/8 END SPANS MULTIPLE LENGTH INTERIOR SPANS
PIER 19 DETAILS
STA. 6792+60.93 - 52' LEFT ℄ I-74 OCTOBER, 2015
SCOTT COUNTY
IOWA DEPARTMENT OF TRANSPORTATION - HIGHWAY DIVISION
DESIGN SHEET NO. 29 OF 282 FILE NO. 30253 DESIGN NO. 3408

DESIGN TEAM RE / TA / JS	SCOTT COUNTY	PROJECT NUMBER BRFIM-074-1(200)5--05-82	SHEET NUMBER 30

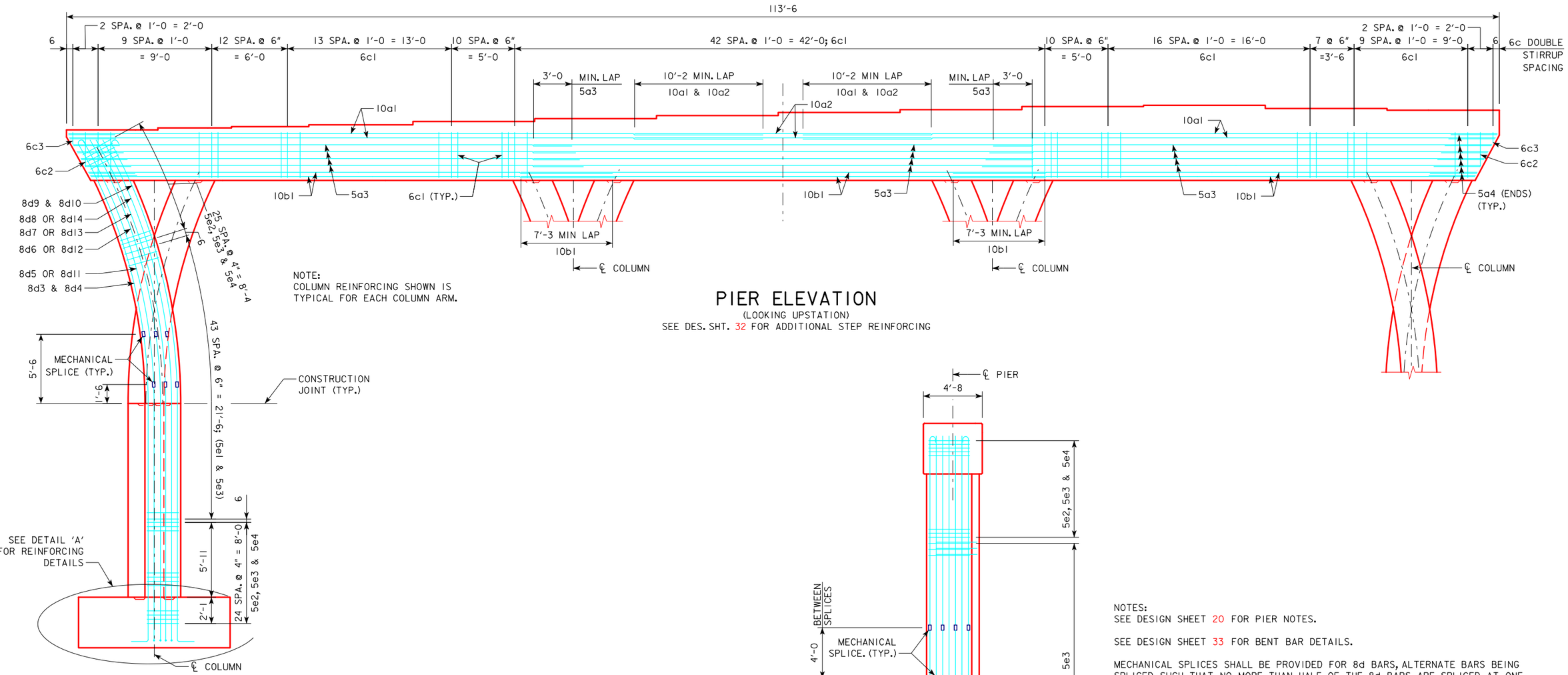

PIER ELEVATION

(LOOKING UPSTATION)

SEE DES. SHT. 32 FOR ADDITIONAL STEP REINFORCING

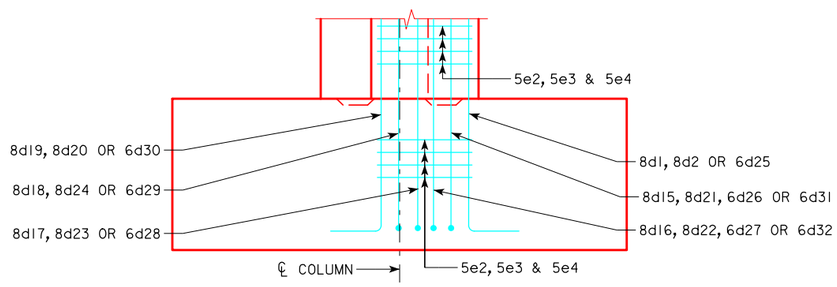

DETAIL 'A'

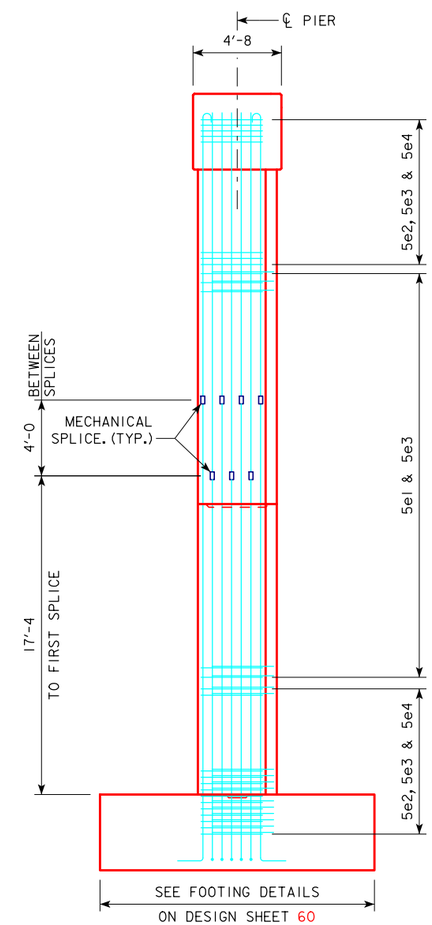

PIER END VIEW

NOTES:

SEE DESIGN SHEET 20 FOR PIER NOTES.

SEE DESIGN SHEET 33 FOR BENT BAR DETAILS.

MECHANICAL SPLICES SHALL BE PROVIDED FOR 8d BARS, ALTERNATE BARS BEING SPLICED, SUCH THAT NO MORE THAN HALF OF THE 8d BARS ARE SPLICED AT ONE LOCATION. SPACE SPLICE LOCATIONS AT 4'-0 MINIMUM ALONG ℄ OF COLUMN.

THE MECHANICAL SPLICES USED SHALL MEET THE REQUIREMENTS OF MATERIALS I.M.451, APPENDIX E.

THE COST OF ALL MECHANICAL SPLICES IS TO BE INCLUDED IN THE PRICE BID FOR "REINFORCING STEEL, EPOXY COATED" AND NO SEPARATE PAYMENT WILL BE MADE. THE WEIGHT OF THE MECHANICAL SPLICES IS NOT INCLUDED IN THE QUANTITY SHOWN ON DES. SH. 33 FOR "REINFORCING STEEL, EPOXY COATED". A TOTAL OF 192 MECHANICAL SPLICES WILL BE REQUIRED AT PIER 19.

SEE DESIGN SHEET 60 FOR FOOTING REINFORCEMENT DETAILS.

whks
engineers + planners + land surveyors

DESIGN FOR VARIABLE SKEW (L.A.)

2271'-6 x VARI. CONTINUOUS WELDED GIRDER BRIDGE-EBL W/14' BIKE TRAIL

138'-10 & 151'-0⅞ END SPANS MULTIPLE LENGTH INTERIOR SPANS

PIER 19 DETAILS

STA. 6792+60.93 - 52' LEFT ℄ I-74 OCTOBER, 2015

SCOTT COUNTY

IOWA DEPARTMENT OF TRANSPORTATION - HIGHWAY DIVISION

DESIGN SHEET NO. 30 OF 282 FILE NO. 30253 DESIGN NO. 3408

DESIGN TEAM RE / TA / JS | SCOTT COUNTY | PROJECT NUMBER BRFIM-074-1(200)5--05-82 | SHEET NUMBER 31

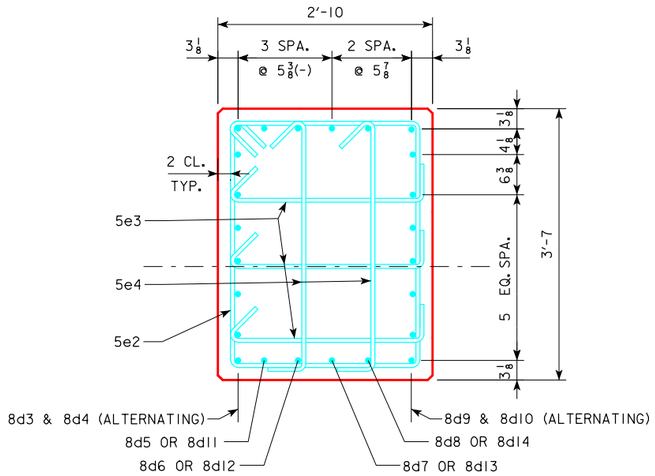

SECTION B-B

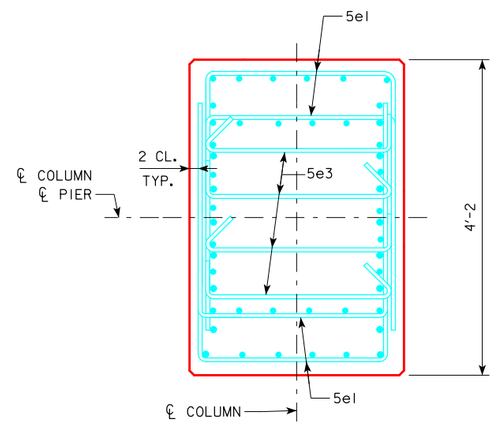

SECTION C-C

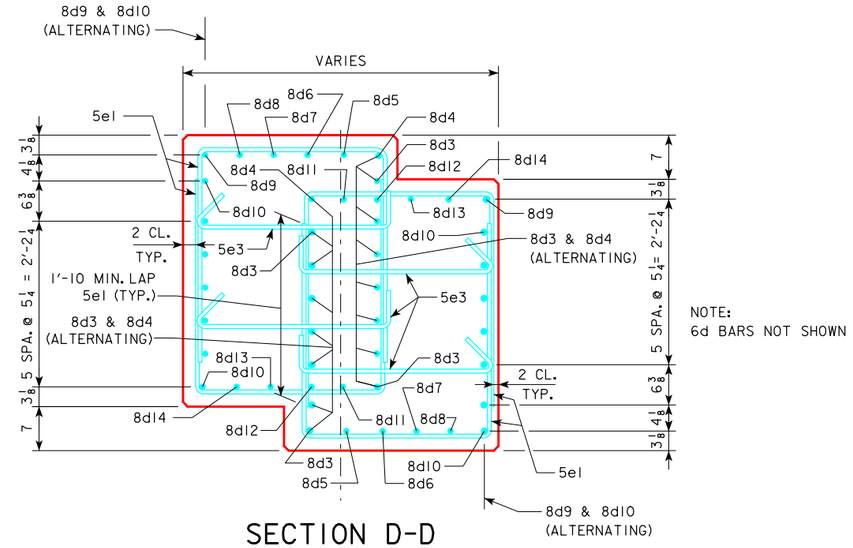

SECTION D-D

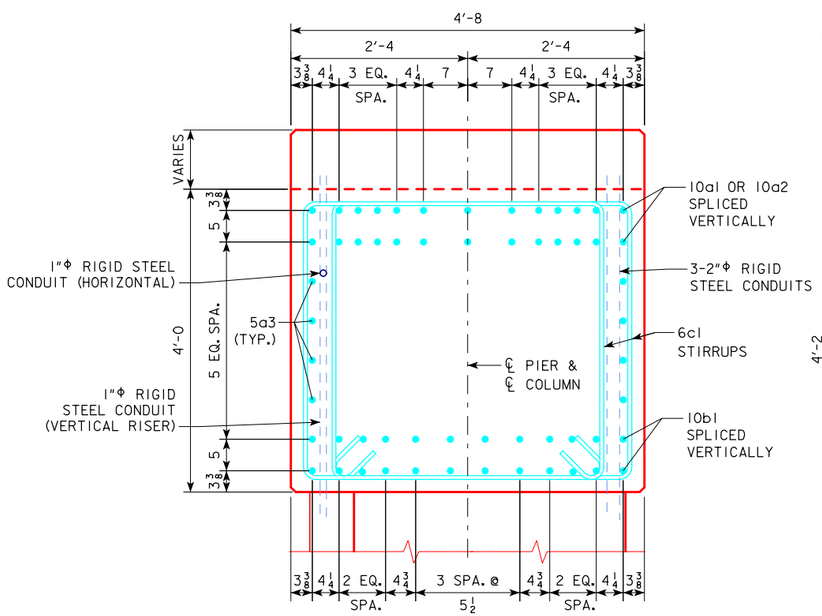

SECTION A-A

STEP REINFORCING NOT SHOWN. SEE DESIGN SHEET 32 FOR DETAILS

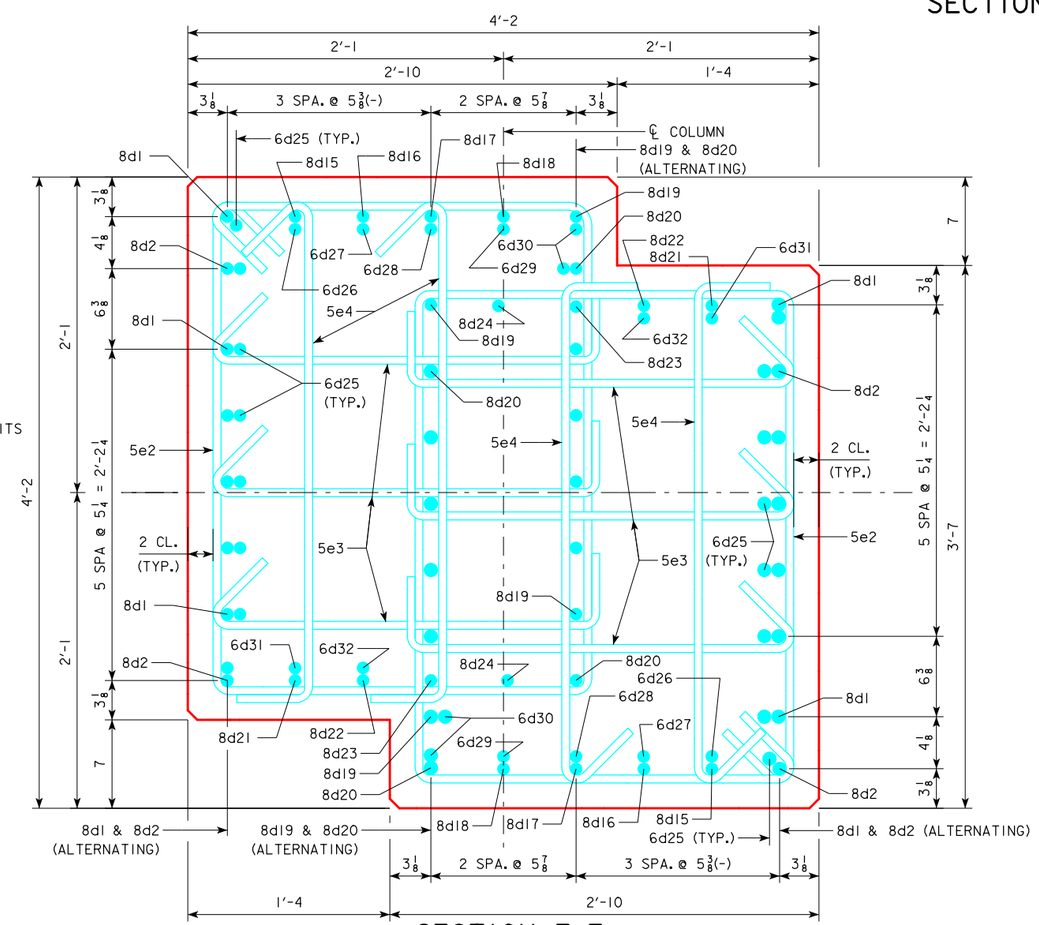

SECTION E-E

(ENLARGED FOR CLARITY)

NOTES:

SEE DESIGN SHEET 20 FOR PIER NOTES.

SEE DESIGN SHEET 33 FOR BENT BAR DETAILS.

FOR LOCATIONS OF SECTIONS A-A, B-B, C-C, D-D & E-E, SEE DESIGN SHEET 29.

ALTERNATE DIRECTION OF 5e3 & 5e4 CROSS TIES SUCH THAT 135° AND 90° HOOKS SWITCH ENDS AT EACH VERTICAL LAYER AND MAINTAIN A MINIMUM OF 1 1/2" CLEAR COVER TO TIES.

6d25 THRU 6d32 BARS ARE SHOWN BUNDLED VERTICALLY FOR CLARITY. ACTUAL BUNDLE ORIENTATION SHALL BE SIDE BY SIDE.

whks
engineers + planners + land surveyors

DESIGN FOR VARIABLE SKEW (L.A.)

2271'-6 x VARI. CONTINUOUS WELDED GIRDER BRIDGE-EBL W/14' BIKE TRAIL

138'-10 & 151'-0 7/8 END SPANS MULTIPLE LENGTH INTERIOR SPANS

PIER 19 DETAILS

STA. 6792+60.93 - 52' LEFT ℄ I-74 OCTOBER, 2015

SCOTT COUNTY

IOWA DEPARTMENT OF TRANSPORTATION - HIGHWAY DIVISION

DESIGN SHEET NO. 31 OF 282 FILE NO. 30253 DESIGN NO. 3408

BENCH MARK NO. 500: STA. 6781+18.92 LT. 161.19'
ELEV. 575.797, CHISELED "X" IN BOLT E. SIDE
CONCRETE STRUCTURE

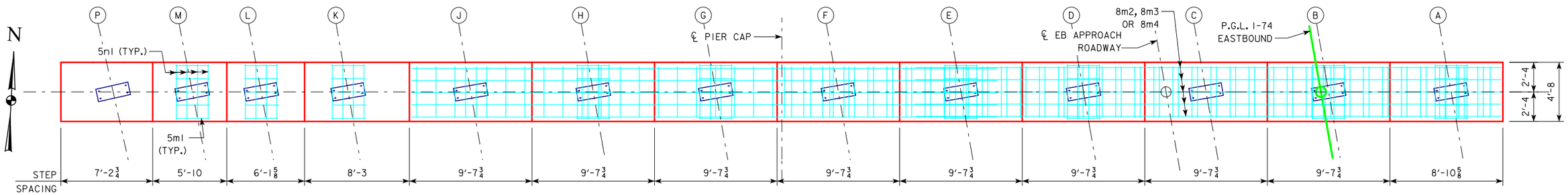

STEP REINFORCEMENT PLAN

(LOOKING UPSTATION)

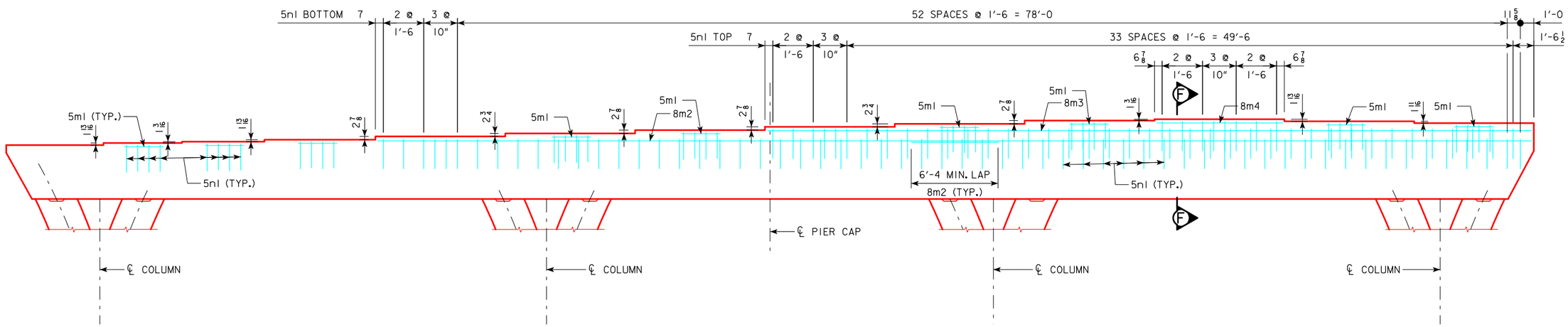

STEP REINFORCEMENT ELEVATION

(LOOKING UPSTATION)

STEP ELEVATIONS

GIRDER	ELEVATION
A	599.05
B	599.19
C	599.34
D	599.24
E	599.00
F	598.77
G	598.53
H	598.29
J	598.06
K	597.82
L	597.67
M	597.57
N	-
P	597.42

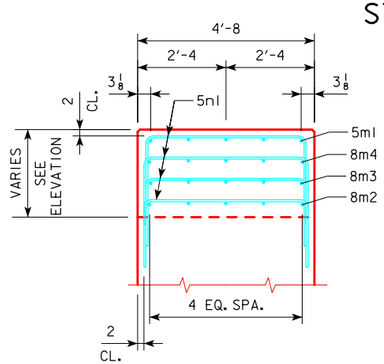

SECTION F-F

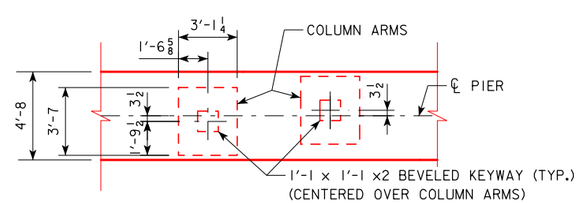

PIER CAP PLAN VIEW

KEYWAY DETAILS

(PIERS 19-31)

whks
engineers + planners + land surveyors

DESIGN FOR VARIABLE SKEW (L.A.)

2271'-6 x VARI. CONTINUOUS WELDED GIRDER BRIDGE-EBL W/14' BIKE TRAIL

138'-10 & 151'-0 7/8 END SPANS MULTIPLE LENGTH INTERIOR SPANS

PIER 19 DETAILS

STA. 6792+60.93 - 52' LEFT ℄ I-74 OCTOBER, 2015

SCOTT COUNTY

IOWA DEPARTMENT OF TRANSPORTATION - HIGHWAY DIVISION

DESIGN SHEET NO. 32 OF 282 FILE NO. 30253 DESIGN NO. 3408

DESIGN TEAM RE / TA / JS | SCOTT COUNTY | PROJECT NUMBER BRFIM-074-1(200)5--05-82 | SHEET NUMBER 33

BENT BAR DETAILS

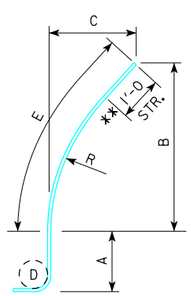

8d1, 8d2 & 6d25

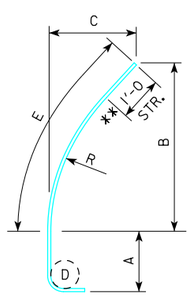

8d19, 8d20 & 6d30

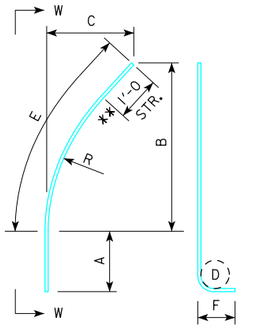

8d21-8d24 6d31 & 6d32

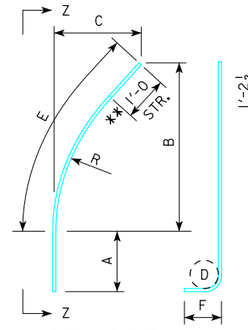

8d15-8d18 6d26-6d29

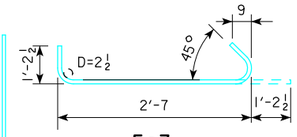

5e3

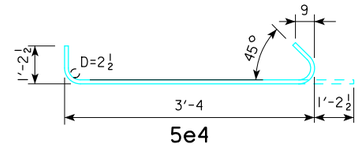

5e4

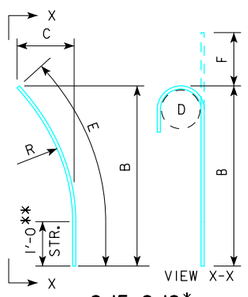

8d5-8d8*

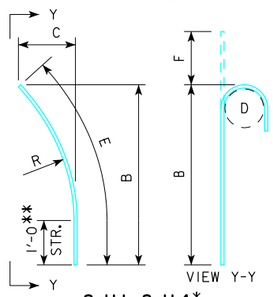

8d11-8d14*

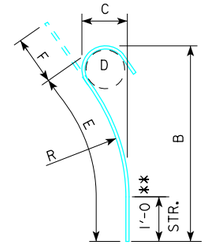

8d3-8d4 & 8d9-8d10*

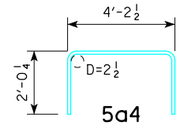

5a4

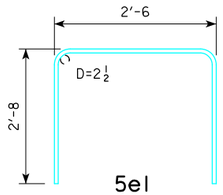

5e1

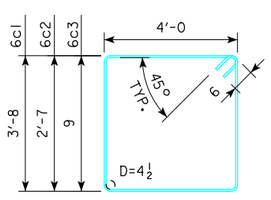

6c1 - 6c3

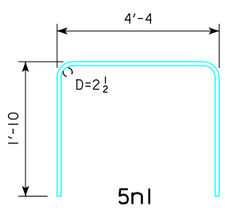

5n1

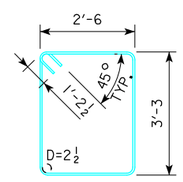

5e2

NOTE: ALL DIMENSIONS ARE OUT TO OUT. D = PIN DIA

d1 - d32 TABLE							
BAR	A	B	C	D	E	F	R
8d1-19	19'-4 7/8	1'-6	1 3/8	6	1'-6	1'-4	43'-1 3/8
8d2-19	19'-4 7/8	5'-6	5 1/4	6	5'-6 1/8	1'-4	43'-1 3/8
8d3-19	-	19'-7 1/8	4'-10 1/2	6	20'-2 5/8	11	40'-9 5/8
8d4-19	-	15'-11 3/8	3'-2	6	16'-2 5/8	11	40'-9 5/8
8d5-19	-	19'-4 1/4	4'-10 5/8	6	20'-1 3/4	11	41'-3 1/2
8d6-19	-	15'-8 1/2	3'-1 5/8	6	16'-1 1/4	11	41'-9 3/8
8d7-19	-	19'-4 1/4	4'-9 1/8	6	20'-1 1/8	11	42'-2 3/4
8d8-19	-	15'-8 1/4	3'-0 3/4	6	16'-0 3/4	11	42'-8
8d9-19	-	19'-6 3/4	4'-6 7/8	6	20'-1 1/4	11	43'-1 3/8
8d10-19	-	15'-10 5/8	2'-2 1/2	6	16'-1 1/4	11	43'-1 3/8
8d11-19	-	19'-4 1/4	4'-10 5/8	6	20'-1 3/4	11	41'-3 1/2
8d12-19	-	15'-8 1/2	3'-1 5/8	6	16'-1 1/4	11	41'-9 3/8
8d13-19	-	19'-4 1/4	4'-9 1/8	6	20'-1 1/8	11	42'-2 3/4
8d14-19	-	15'-8 1/4	3'-0 3/4	6	16'-0 3/4	11	42'-8
8d15-19	19'-4 7/8	5'-6	5 1/4	6	5'-6 1/8	1'-4	42'-8
8d16-19	19'-4 7/8	1'-6	1 3/8	6	1'-6	1'-4	42'-2 3/4
8d17-19	19'-4 7/8	5'-6	5 3/8	6	5'-6 1/4	1'-4	41'-9 3/8
8d18-19	19'-4 7/8	1'-6	1 3/8	6	1'-6	1'-4	41'-3 1/2
8d19-19	19'-4 7/8	5'-6	5 1/2	6	5'-6 1/4	1'-4	40'-9 5/8
8d20-19	19'-4 7/8	1'-6	2 3/4	6	1'-6	1'-4	40'-9 5/8
8d21-19	19'-4 7/8	5'-6	5 1/4	6	5'-6 1/8	1'-4	42'-8
8d22-19	19'-4 7/8	1'-6	1 3/8	6	1'-6	1'-4	42'-2 3/4
8d23-19	19'-4 7/8	5'-6	5 3/8	6	5'-6 1/4	1'-4	41'-9 3/8
8d24-19	19'-4 7/8	1'-6	1 3/8	6	1'-6	1'-4	41'-3 1/2
6d25-19	19'-4 7/8	5'-6	5 1/4	4 1/2	5'-6 1/8	1'-0	43'-1 3/8
6d26-19	19'-4 7/8	5'-6	5 1/4	4 1/2	5'-6 1/8	1'-0	42'-8
6d27-19	19'-4 7/8	5'-6	5 3/8	4 1/2	5'-6 1/8	1'-0	42'-2 3/4
6d28-19	19'-4 7/8	5'-6	5 3/8	4 1/2	5'-6 1/4	1'-0	41'-9 3/8
6d29-19	19'-4 7/8	5'-6	5 3/8	4 1/2	5'-6 1/4	1'-0	41'-3 1/2
6d30-19	19'-4 7/8	5'-6	5 1/2	4 1/2	5'-6 1/4	1'-0	40'-9 5/8
6d31-19	19'-4 7/8	5'-6	5 1/4	4 1/2	5'-6 1/8	1'-0	42'-8
6d32-19	19'-4 7/8	5'-6	5 3/8	4 1/2	5'-6 1/8	1'-0	42'-2 3/4

'R' IS THE INSIDE OF RADIUS OF REBAR. DIMENSION 'C' IS APPROX.

* d3 THRU d14 BARS MAY BE SUBSTITUTED WITH d38 & dXX BARS CONNECTED WITH A MECHANICAL BAR SPLICER. SEE DESIGN SHEET 20.

** 1'-0 END PORTION OF BAR TO BE STRAIGHT FOR CONNECTION OF MECHANICAL BAR SPLICER.

NOTE:
DESIGNATION "-19" SIGNIFIES BAR ASSOCIATED WITH PIER 19 OF THE EASTBOUND DESIGN NO. 3408 BRIDGE

NON COATED REINFORCING BAR LIST - PIER 19

	BAR	LOCATION	SHAPE	NO.	LENGTH	WEIGHT
	10a1-19	CAP, LONGITUDINAL-TOP		52	55'-0	12,307
	10a2-19	CAP, LONGITUDINAL-TOP		26	23'-6	2,629
	5a3-19	CAP, LONGITUDINAL-SIDE		24	39'-6	989
	5a4-19	CAP, ENDS		16	8'-3	138
	10b1-19	CAP, LONGITUDINAL-BOTTOM		72	41'-7	12,883
	6c1-19	CAP, STIRRUP		258	16'-4	6,329
	6c2-19	CAP, STIRRUP-END		4	14'-2	85
	6c3-19	CAP, STIRRUP-END		4	10'-6	63
	8d1-19	COLUMN VERTICAL TO FOOTING		32	22'-3	1,901
	8d2-19	COLUMN VERTICAL TO FOOTING		32	26'-3	2,243
*	8d3-19	COLUMN VERTICAL		32	21'-2	1,808
*	8d4-19	COLUMN VERTICAL		32	17'-2	1,467
*	8d5-19	COLUMN VERTICAL		8	21'-1	450
*	8d6-19	COLUMN VERTICAL		8	17'-1	365
*	8d7-19	COLUMN VERTICAL		8	21'-1	450
*	8d8-19	COLUMN VERTICAL		8	17'-0	363
*	8d9-19	COLUMN VERTICAL		32	21'-1	1,801
*	8d10-19	COLUMN VERTICAL		32	17'-1	1,460
*	8d11-19	COLUMN VERTICAL		8	21'-1	450
*	8d12-19	COLUMN VERTICAL		8	17'-1	365
*	8d13-19	COLUMN VERTICAL		8	21'-1	450
*	8d14-19	COLUMN VERTICAL		8	17'-0	363
	8d15-19	COLUMN VERTICAL TO FOOTING		8	26'-3	561
	8d16-19	COLUMN VERTICAL TO FOOTING		8	22'-3	475
	8d17-19	COLUMN VERTICAL TO FOOTING		8	26'-4	562
	8d18-19	COLUMN VERTICAL TO FOOTING		8	22'-3	475
	8d19-19	COLUMN VERTICAL TO FOOTING		32	26'-4	2,250
	8d20-19	COLUMN VERTICAL TO FOOTING		32	22'-3	1,901
	8d21-19	COLUMN VERTICAL TO FOOTING		8	26'-3	561
	8d22-19	COLUMN VERTICAL TO FOOTING		8	22'-3	475
	8d23-19	COLUMN VERTICAL TO FOOTING		8	26'-4	562
	8d24-19	COLUMN VERTICAL TO FOOTING		8	22'-3	475
	6d25-19	COLUMN VERTICAL TO FOOTING		64	25'-11	2,491
	6d26-19	COLUMN VERTICAL TO FOOTING		8	25'-11	311
	6d27-19	COLUMN VERTICAL TO FOOTING		8	25'-11	311
	6d28-19	COLUMN VERTICAL TO FOOTING		8	26'-0	312
	6d29-19	COLUMN VERTICAL TO FOOTING		8	26'-0	312
	6d30-19	COLUMN VERTICAL TO FOOTING		16	26'-0	625
	6d31-19	COLUMN VERTICAL TO FOOTING		8	25'-11	311
	6d32-19	COLUMN VERTICAL TO FOOTING		8	25'-11	311
	5e1-19	COLUMN STIRRUP		704	7'-10	5,752
	5e2-19	COLUMN STIRRUP, TOP & BOTT. OF COLUMN		408	13'-11	5,922
	5e3-19	COLUMN TIE		1928	5'-0	10,055
	5e4-19	COLUMN TIE		816	5'-9	4,894
	5f1-19	FOOTING, TOP - TRANSVERSE		60	12'-6	782
	5f2-19	FOOTING, TOP - LONGITUDINAL		52	14'-0	759
	9g1-19	FOOTING, BOTTOM - TRANSVERSE		124	12'-6	5,270
	9g2-19	FOOTING, BOTTOM - LONGITUDINAL		112	14'-0	5,331
	5m1-19	STEP, LONGITUDINAL		45	3'-0	141
	8m2-19	STEP, LONGITUDINAL		10	46'-1	1,230
	8m3-19	STEP, LONGITUDINAL		5	56'-9	758
	8m4-19	STEP, LONGITUDINAL		5	9'-3	123
	5n1-19	STEP, TRANSVERSE		142	8'-0	1,185
		REINFORCING STEEL - NON-COATED		- TOTAL (LBS.)		104,842

ESTIMATED QUANTITIES

ITEM	UNIT	TOTAL
EXCAVATION, CL 20	CY	416
EXCAVATION, CL 22	CY	50
STRUCTURAL CONCRETE (BRIDGE)	CY	210.9
REINFORCING STEEL	LB	104,842
HP SELF-CONSOLIDATING CONCRETE (HP-SCC)	CY	81.2

STRUCT. CONCRETE PLACEMENT QUANTITIES

STRUCTURAL CONCRETE (BRIDGE)		
LOCATION	UNIT	QUANTITY
CAP	CY	99.3
FOOTING	CY	111.6
TOTAL STRUCTURAL CONCRETE (BRIDGE)		210.9
HIGH PERFORMANCE SELF-CONSOLIDATING CONCRETE (HP-SCC)		
LOCATION	UNIT	QUANTITY
COLUMN	CY	81.2
TOTAL HIGH PERFORMANCE SELF-CONSOLIDATING CONC. (HP-SCC)		81.2

NOTE:
THE LENGTHS SHOWN FOR COLUMN VERTICAL BARS ARE TO THE CENTER OF THE MECHANICAL SPLICE. ADJUSTMENTS TO THE COLUMN BAR LENGTHS MAY BE REQUIRED DEPENDING ON THE SPLICE MECHANISM USED.

whks
engineers + planners + land surveyors

DESIGN FOR VARIABLE SKEW (L.A.)

2271'-6 x VARI. CONTINUOUS WELDED GIRDER BRIDGE-EBL W/14' BIKE TRAIL

138'-10 & 151'-0 7/8 END SPANS MULTIPLE LENGTH INTERIOR SPANS

PIER 19 DETAILS

STA. 6792+60.93 - 52' LEFT ℄ I-74 OCTOBER, 2015

SCOTT COUNTY

IOWA DEPARTMENT OF TRANSPORTATION - HIGHWAY DIVISION

DESIGN SHEET NO. 33 OF 282 FILE NO. 30253 DESIGN NO. 3408

DESIGN TEAM RE / TA / JS | SCOTT COUNTY | PROJECT NUMBER BRFIM-074-1(200)5--05-82 | SHEET NUMBER 34

BENCH MARK NO. 500: STA. 6781+18.92 LT. 161.19'
ELEV. 575.797, CHISELED "X" IN BOLT E. SIDE
CONCRETE STRUCTURE

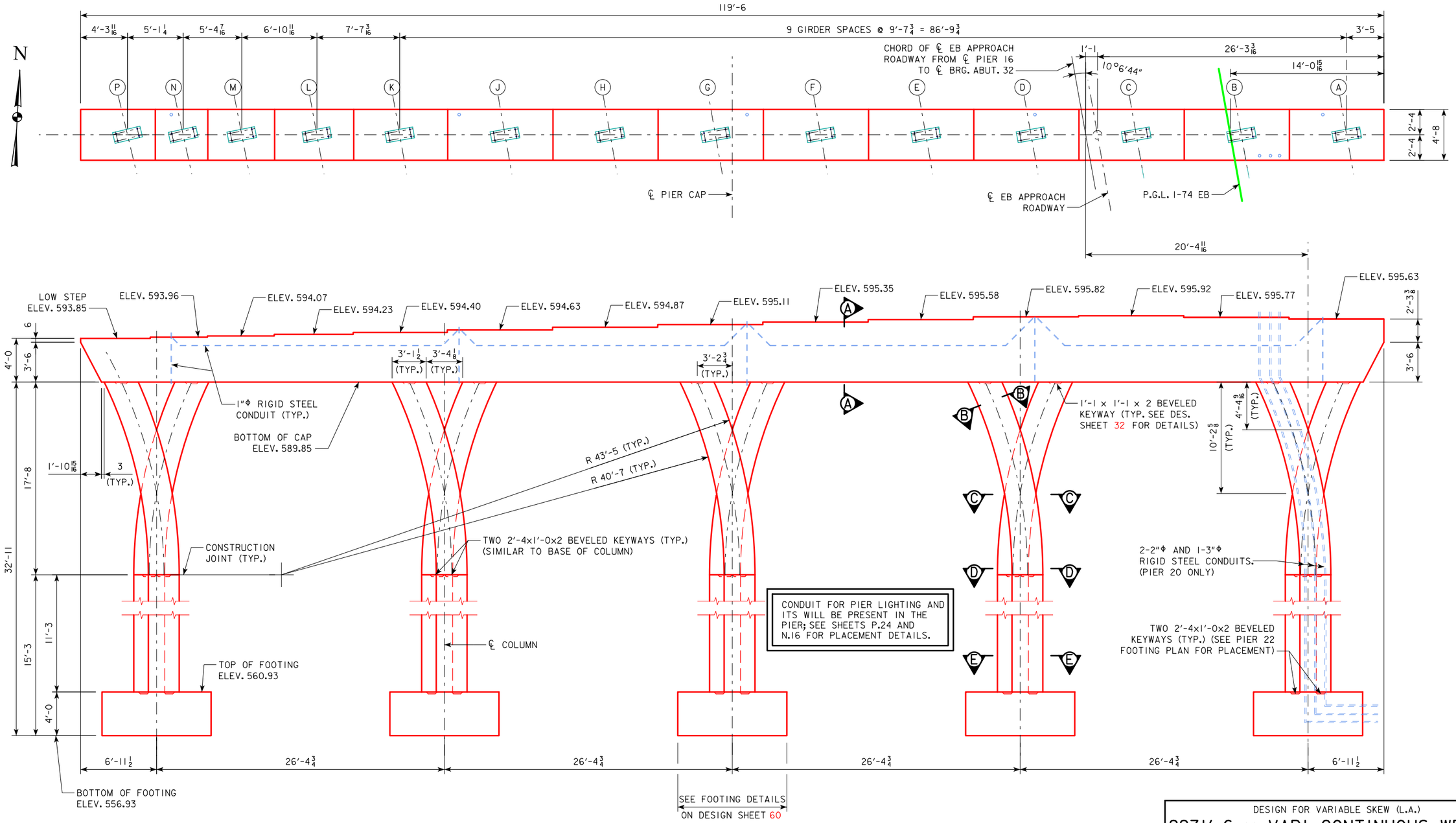

NOTES:
SEE DESIGN SHEET 20 FOR PIER NOTES.
SEE DESIGN SHEET 36 FOR SECTIONS A-A, B-B, C-C, D-D, & E-E.
SEE DESIGN SHEET 37 FOR STEP SPACING.
SEE DESIGN SHEET 32 FOR PIER CAP KEYWAY DETAILS.
SEE DESIGN SHEET 60 FOR FOOTING DIMENSIONS.
SEE DESIGN SHEET 56 FOR ANCHOR BOLT LAYOUT.
SEE DESIGN SHEET 60 FOR COLUMN KEYWAY DETAILS.

PIER ELEVATION
(LOOKING UPSTATION)

whks
engineers + planners + land surveyors

DESIGN FOR VARIABLE SKEW (L.A.)

2271'-6 x VARI. CONTINUOUS WELDED GIRDER BRIDGE-EBL W/14' BIKE TRAIL

138'-10 & 151'-0 7/8 END SPANS MULTIPLE LENGTH INTERIOR SPANS

PIER 20 DETAILS

STA. 6792+60.93 - 52' LEFT ℄ I-74 OCTOBER, 2015

SCOTT COUNTY

IOWA DEPARTMENT OF TRANSPORTATION - HIGHWAY DIVISION

DESIGN SHEET NO. 34 OF 282 FILE NO. 30253 DESIGN NO. 3408

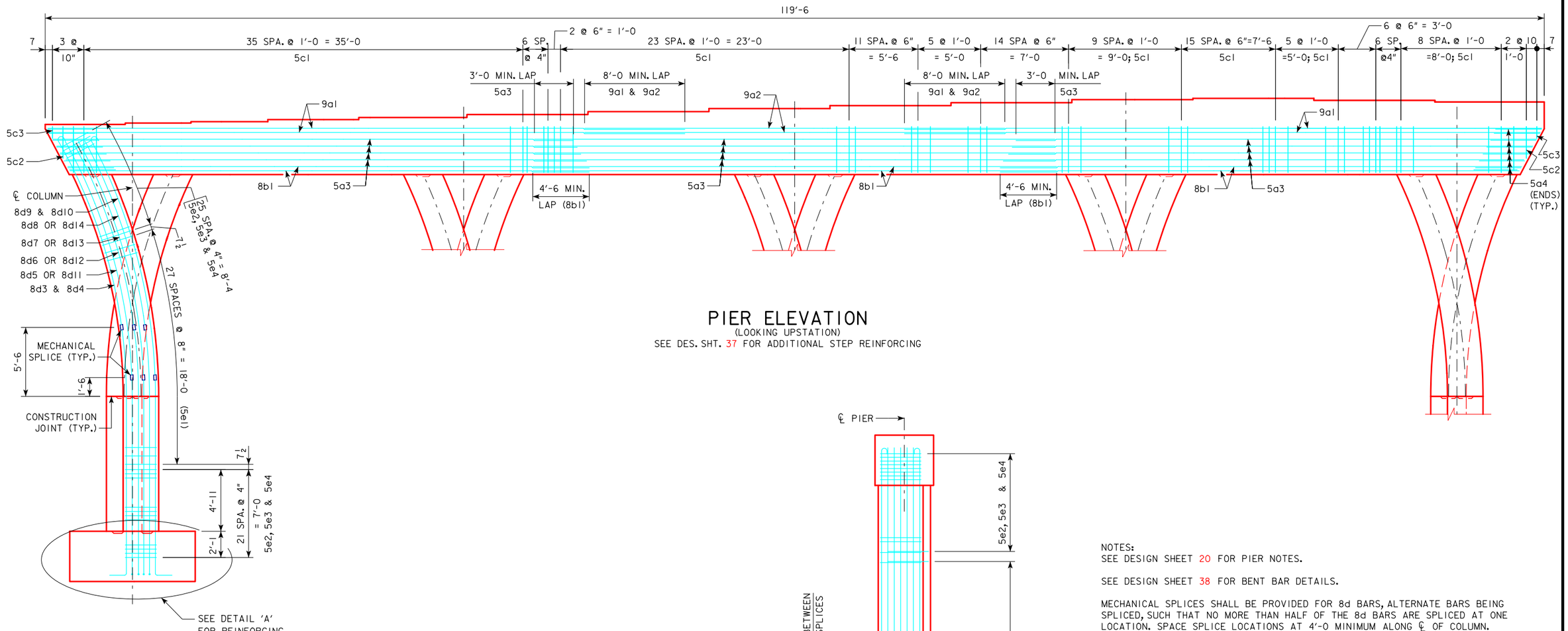

PIER ELEVATION

(LOOKING UPSTATION)

SEE DES. SHT. 37 FOR ADDITIONAL STEP REINFORCING

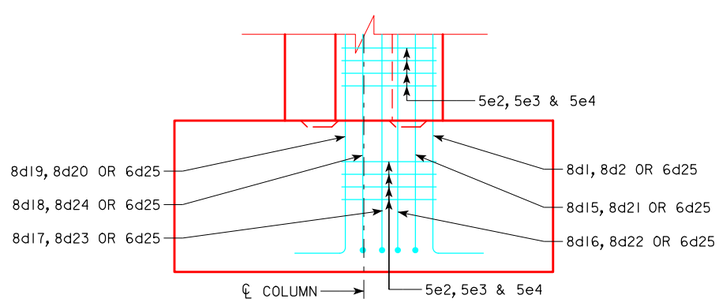

DETAIL 'A'

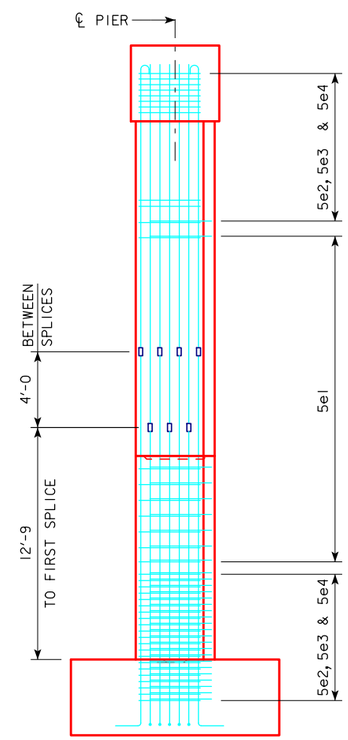

PIER END VIEW

NOTES:

SEE DESIGN SHEET 20 FOR PIER NOTES.

SEE DESIGN SHEET 38 FOR BENT BAR DETAILS.

MECHANICAL SPLICES SHALL BE PROVIDED FOR 8d BARS, ALTERNATE BARS BEING SPLICED, SUCH THAT NO MORE THAN HALF OF THE 8d BARS ARE SPLICED AT ONE LOCATION. SPACE SPLICE LOCATIONS AT 4'-0 MINIMUM ALONG ℄ OF COLUMN.

THE MECHANICAL SPLICES USED SHALL MEET THE REQUIREMENTS OF MATERIALS I.M.451, APPENDIX E.

THE COST OF ALL MECHANICAL SPLICES IS TO BE INCLUDED IN THE PRICE BID FOR "REINFORCING STEEL, EPOXY COATED" AND NO SEPARATE PAYMENT WILL BE MADE. THE WEIGHT OF THE MECHANICAL SPLICES IS NOT INCLUDED IN THE QUANTITY SHOWN ON DES. SH. 38 FOR "REINFORCING STEEL, EPOXY COATED". A TOTAL OF 192 MECHANICAL SPLICES WILL BE REQUIRED AT PIER 20.

SEE DESIGN SHEET 60 FOR FOOTING REINFORCEMENT DETAILS.

whks
engineers + planners + land surveyors

DESIGN FOR VARIABLE SKEW (L.A.)

2271'-6 x VARI. CONTINUOUS WELDED GIRDER BRIDGE-EBL W/14' BIKE TRAIL

138'-10 & 151'-0⅞ END SPANS MULTIPLE LENGTH INTERIOR SPANS

PIER 20 DETAILS

STA. 6792+60.93 - 52' LEFT ℄ I-74 OCTOBER, 2015

SCOTT COUNTY

IOWA DEPARTMENT OF TRANSPORTATION - HIGHWAY DIVISION

DESIGN SHEET NO. 35 OF 282 FILE NO. 30253 DESIGN NO. 3408

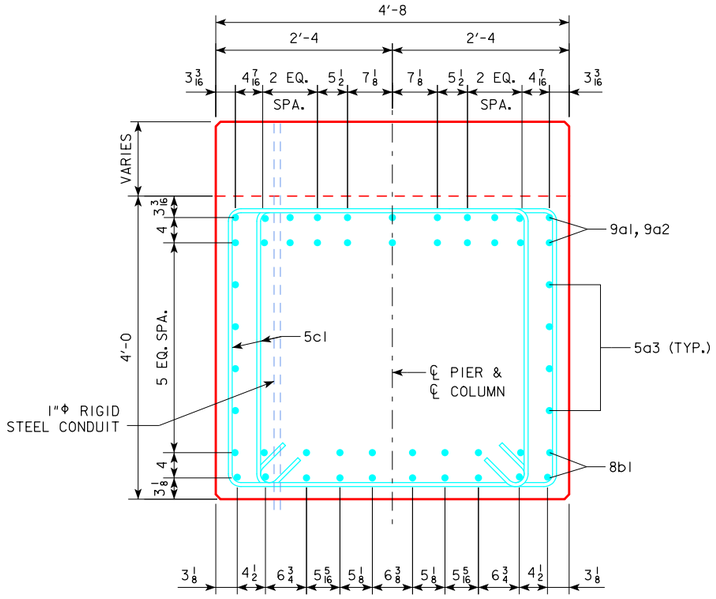

SECTION A-A

STEP REINFORCING NOT SHOWN. SEE DESIGN SHEET 37 FOR DETAILS

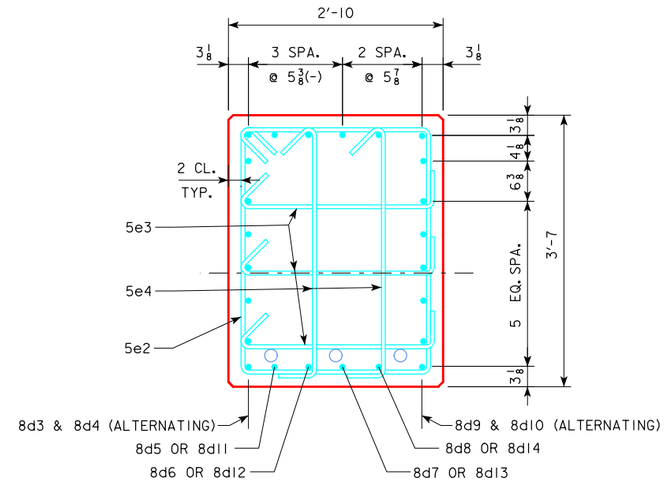

SECTION B-B

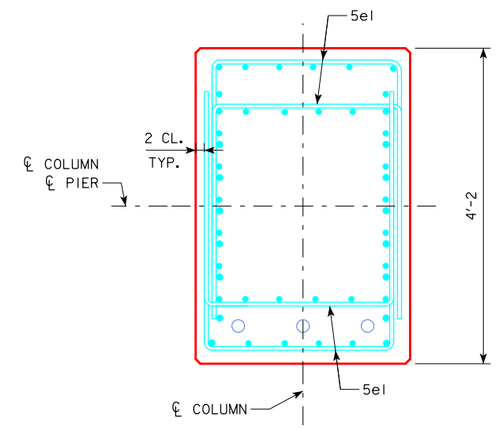

SECTION C-C

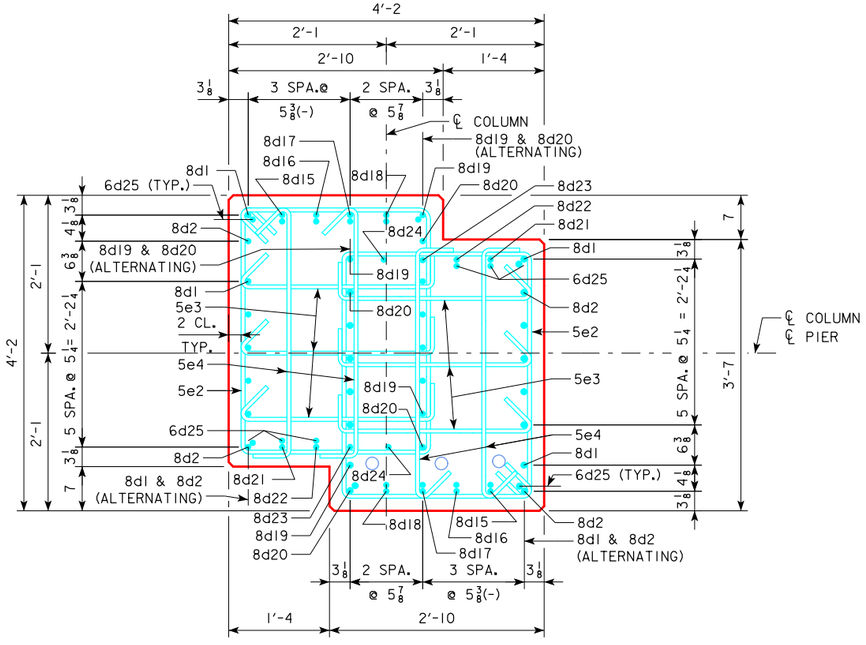

SECTION E-E

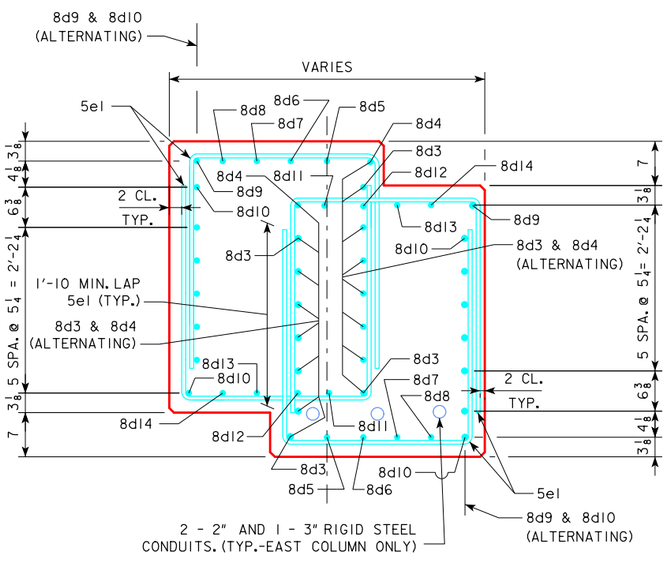

SECTION D-D

NOTES:

SEE DESIGN SHEET 20 FOR PIER NOTES.

SEE DESIGN SHEET 38 FOR BENT BAR DETAILS.

FOR LOCATIONS OF SECTIONS A-A, B-B, C-C, D-D & E-E, SEE DESIGN SHEET 34.

ALTERNATE DIRECTION OF 5e3 & 5e4 CROSS TIES SUCH THAT 135° AND 90° HOOKS SWITCH ENDS AT EACH VERTICAL LAYER AND MAINTAIN A MINIMUM OF 1½" CLEAR COVER TO TIES.

6d25 BARS ARE SHOWN BUNDLED VERTICALLY FOR CLARITY. ACTUAL BUNDLE ORIENTATION SHALL BE SIDE BY SIDE.

whks
engineers + planners + land surveyors

DESIGN FOR VARIABLE SKEW (L.A.)

2271'-6 x VARI. CONTINUOUS WELDED GIRDER BRIDGE-EBL W/14' BIKE TRAIL

138'-10 & 151'-0 7/8 END SPANS MULTIPLE LENGTH INTERIOR SPANS

PIER 20 DETAILS

STA. 6792+60.93 - 52' LEFT ℄ I-74 OCTOBER, 2015

SCOTT COUNTY

IOWA DEPARTMENT OF TRANSPORTATION - HIGHWAY DIVISION

DESIGN SHEET NO. 36 OF 282 FILE NO. 30253 DESIGN NO. 3408

BENCH MARK NO. 500: STA. 6781+18.92 LT. 161.19'
ELEV. 575.797, CHISELED "X" IN BOLT E. SIDE
CONCRETE STRUCTURE

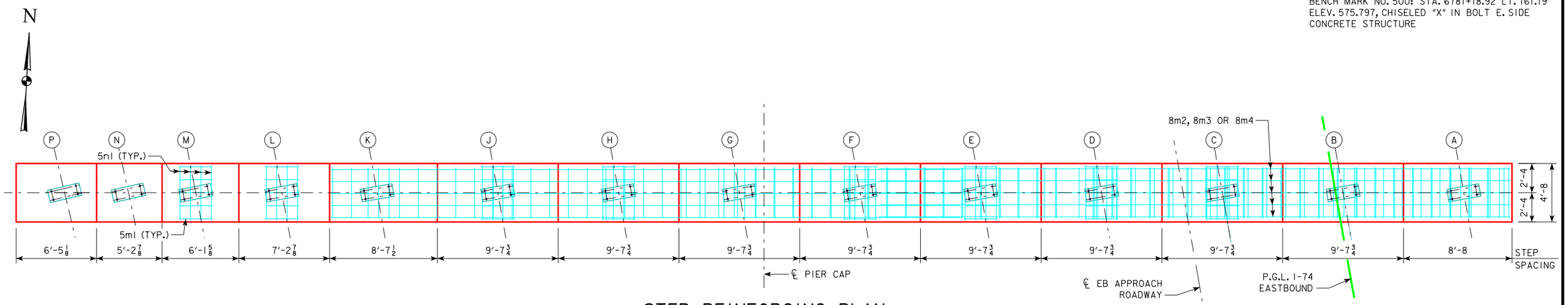

STEP REINFORCING PLAN

(LOOKING UPSTATION)

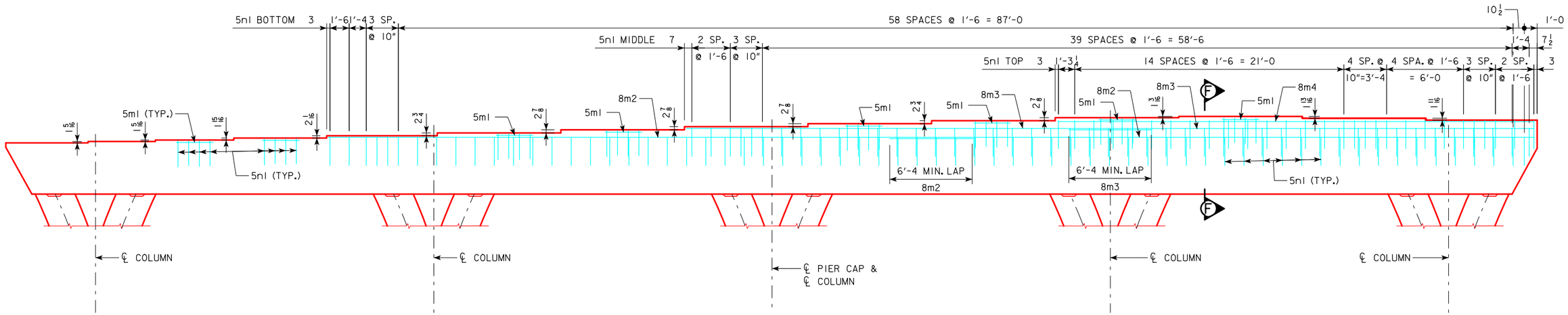

STEP REINFORCING ELEVATION

(LOOKING UPSTATION)

STEP ELEVATIONS

GIRDER	ELEVATION
A	595.63
B	595.77
C	595.92
D	595.82
E	595.58
F	595.35
G	595.11
H	594.87
J	594.63
K	594.40
L	594.23
M	594.07
N	593.96
P	593.85

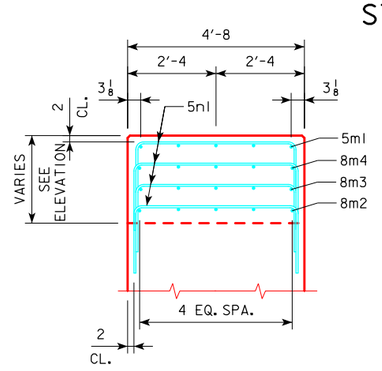

SECTION F-F

whks
engineers + planners + land surveyors

DESIGN FOR VARIABLE SKEW (L.A.)

2271'-6 x VARI. CONTINUOUS WELDED GIRDER BRIDGE-EBL W/14' BIKE TRAIL

138'-10 & 151'-0 7/8 END SPANS MULTIPLE LENGTH INTERIOR SPANS

PIER 20 DETAILS

STA. 6792+60.93 - 52' LEFT ℄ I-74 OCTOBER, 2015

SCOTT COUNTY

IOWA DEPARTMENT OF TRANSPORTATION - HIGHWAY DIVISION

DESIGN SHEET NO. 37 OF 282 FILE NO. 30253 DESIGN NO. 3408

BENT BAR DETAILS

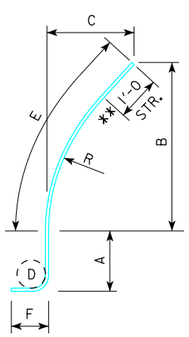

8d1 & 8d2

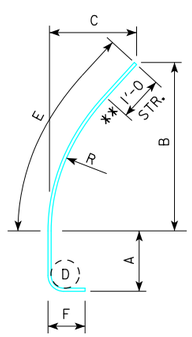

8d19 & 8d20

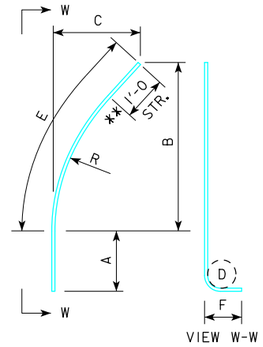

8d21-8d24

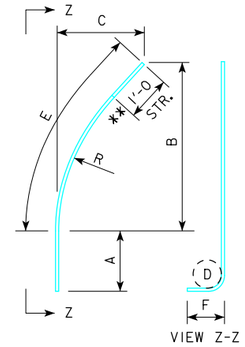

8d15-8d18

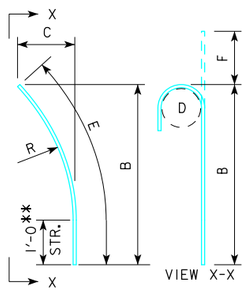

8d5-8d8 *

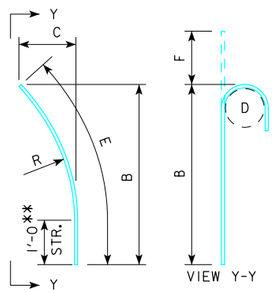

8d11-8d14 *

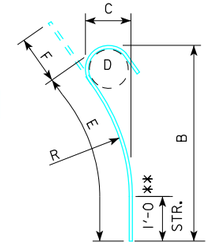

8d3 & 8d4, 8d9 & 8d10 *

6d25

d1 -d25 TABLE							
BAR	A	B	C	D	E	F	R
8d1-20	14'-10	1'-6	1 3/8	6	1'-6	1'-4	43'-1 3/8
8d2-20	14'-10	5'-6	5 1/4	6	5'-6 1/8	1'-4	43'-1 3/8
8d3-20	-	19'-7 1/8	4'-10 1/2	6	20'-2 5/8	11	40'-9 5/8
8d4-20	-	15'-11 3/8	3'-2	6	16'-2 5/8	11	40'-9 5/8
8d5-20	-	19'-4 1/4	4'-10 5/8	6	20'-1 3/4	11	41'-3 1/2
8d6-20	-	15'-8 1/2	3'-1 5/8	6	16'-1 1/4	11	41'-9 3/8
8d7-20	-	19'-4 1/4	4'-9 1/8	6	20'-1 1/8	11	42'-2 3/4
8d8-20	-	15'-8 1/4	3'-0 3/4	6	16'-0 3/4	11	42'-8
8d9-20	-	19'-6 3/4	4'-6 7/8	6	20'-1 1/4	11	43'-1 3/8
8d10-20	-	15'-10 5/8	2'-2 1/2	6	16'-1 1/4	11	43'-1 3/8
8d11-20	-	19'-4 1/4	4'-10 5/8	6	20'-1 3/4	11	41'-3 1/2
8d12-20	-	15'-8 1/2	3'-1 5/8	6	16'-1 1/4	11	41'-9 3/8
8d13-20	-	19'-4 1/4	4'-9 1/8	6	20'-1 1/8	11	42'-2 3/4
8d14-20	-	15'-8 1/4	3'-0 3/4	6	16'-0 3/4	11	42'-8
8d15-20	14'-10	5'-6	5 1/4	6	5'-6 1/8	1'-4	42'-8
8d16-20	14'-10	1'-6	1 3/8	6	1'-6	1'-4	42'-2 3/4
8d17-20	14'-10	5'-6	5 3/8	6	5'-6 1/4	1'-4	41'-9 3/8
8d18-20	14'-10	1'-6	1 3/8	6	1'-6	1'-4	41'-3 1/2
8d19-20	14'-10	5'-6	5 1/2	6	5'-6 1/4	1'-4	40'-9 5/8
8d20-20	14'-10	1'-6	2 3/4	6	1'-6	1'-4	40'-9 5/8
8d21-20	14'-10	5'-6	5 1/4	6	5'-6 1/8	1'-4	42'-8
8d22-20	14'-10	1'-6	1 3/8	6	1'-6	1'-4	42'-2 3/4
8d23-20	14'-10	5'-6	5 3/8	6	5'-6 1/4	1'-4	41'-9 3/8
8d24-20	14'-10	1'-6	1 3/8	6	1'-6	1'-4	41'-3 1/2
6d25-20	13'-10	-	-	4 1/2	-	1'-0	-

'R' IS THE INSIDE OF RADIUS OF REBAR. DIMENSION 'C' IS APPROX.

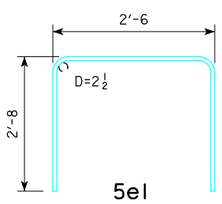

5e1

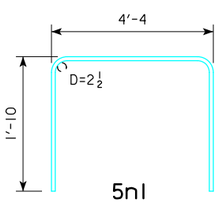

5n1

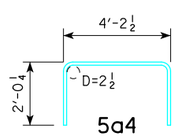

5a4

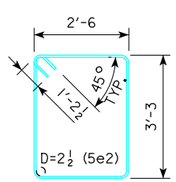

5e2

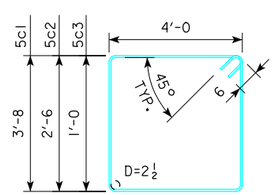

5c1 - 5c3

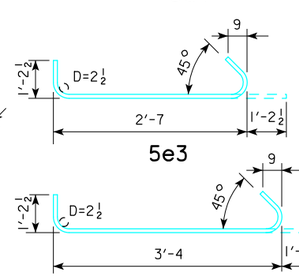

5e3

5e4

NOTE: ALL DIMENSIONS ARE OUT TO OUT. D = PIN DIA

NON COATED REINFORCING BAR LIST - PIER 20

	BAR	LOCATION	SHAPE	NO.	LENGTH	WEIGHT
	9a1-20	CAP, LONGITUDINAL-TOP		44	50'-0	7,480
	9a2-20	CAP, LONGITUDINAL-TOP		22	35'-2	2,630
	5a3-20	CAP, LONGITUDINAL-SIDE		24	41'-6	1,039
	5a4-20	CAP, ENDS		16	8'-3	138
	8b1-20	CAP, LONGITUDINAL-BOTTOM		60	42'-0	6,728
	5c1-20	CAP, STIRRUP		296	16'-4	5,043
	5c2-20	CAP, STIRRUP-END		4	14'-0	58
	5c3-20	CAP, STIRRUP-END		4	11'-0	46
	8d1-20	COLUMN VERTICAL TO FOOTING		40	17'-8	1,887
	8d2-20	COLUMN VERTICAL TO FOOTING		40	21'-9	2,323
*	8d3-20	COLUMN VERTICAL		40	21'-2	2,261
*	8d4-20	COLUMN VERTICAL		40	17'-2	1,833
*	8d5-20	COLUMN VERTICAL		10	21'-1	563
*	8d6-20	COLUMN VERTICAL		10	17'-1	456
*	8d7-20	COLUMN VERTICAL		10	21'-1	563
*	8d8-20	COLUMN VERTICAL		10	17'-0	454
*	8d9-20	COLUMN VERTICAL		40	21'-1	2,252
*	8d10-20	COLUMN VERTICAL		40	17'-1	1,825
*	8d11-20	COLUMN VERTICAL		10	21'-1	563
*	8d12-20	COLUMN VERTICAL		10	17'-1	456
*	8d13-20	COLUMN VERTICAL		10	21'-1	563
*	8d14-20	COLUMN VERTICAL		10	17'-0	454
	8d15-20	COLUMN VERTICAL TO FOOTING		10	21'-9	581
	8d16-20	COLUMN VERTICAL TO FOOTING		10	17'-8	472
	8d17-20	COLUMN VERTICAL TO FOOTING		10	21'-9	581
	8d18-20	COLUMN VERTICAL TO FOOTING		10	17'-8	472
	8d19-20	COLUMN VERTICAL TO FOOTING		40	21'-9	2,323
	8d20-20	COLUMN VERTICAL TO FOOTING		40	17'-8	1,887
	8d21-20	COLUMN VERTICAL TO FOOTING		10	21'-9	581
	8d22-20	COLUMN VERTICAL TO FOOTING		10	17'-8	472
	8d23-20	COLUMN VERTICAL TO FOOTING		10	21'-9	581
	8d24-20	COLUMN VERTICAL TO FOOTING		10	17'-8	472
	6d25-20	COLUMN VERTICAL TO FOOTING		90	14'-10	2,005
	5e1-20	COLUMN STIRRUP		560	7'-10	4,575
	5e2-20	COLUMN STIRRUP, TOP & BOTT. OF COLUMN		480	13'-11	6,967
	5e3-20	COLUMN TIE		1440	5'-0	7,510
	5e4-20	COLUMN TIE		960	5'-9	5,757
	5f1-20	FOOTING, TOP - TRANSVERSE		60	11'-0	688
	5f2-20	FOOTING, TOP - LONGITUDINAL		60	11'-6	720
	8g1-20	FOOTING, BOTTOM - TRANSVERSE		115	11'-0	3,378
	8g2-20	FOOTING, BOTTOM - LONGITUDINAL		110	11'-6	3,378
	5m1-20	STEP, LONGITUDINAL		40	3'-0	125
	8m2-20	STEP, LONGITUDINAL		10	50'-3	1,342
	8m3-20	STEP, LONGITUDINAL		10	36'-4	970
	8m4-20	STEP, LONGITUDINAL		5	37'-7	502
	5n1-20	STEP, TRANSVERSE		172	8'-0	1,435
		REINFORCING STEAL - NON-COATED - TOTAL (LBS.)				87,389

STRUCT. CONCRETE PLACEMENT QUANTITIES

STRUCTURAL CONCRETE (BRIDGE)		
LOCATION	UNIT	QUANTITY
CAP	CY	106.2
FOOTING	CY	102.0
TOTAL STRUCTURAL CONCRETE (BRIDGE)		208.2
HIGH PERFORMANCE SELF-CONSOLIDATING CONCRETE (HP-SCC)		
LOCATION	UNIT	QUANTITY
COLUMN	CY	88.5
TOTAL HIGH PERFORMANCE SELF-CONSOLIDATING CONC. (HP-SCC)		88.5

ESTIMATED QUANTITIES

ITEM	UNIT	TOTAL
EXCAVATION, CL 20	CY	340
EXCAVATION, CL 22	CY	62
STRUCTURAL CONCRETE (BRIDGE)	CY	208.2
REINFORCING STEEL	LB	87,389
HP SELF-CONSOLIDATING CONCRETE (HP-SCC)	CY	88.5

NOTE:
DESIGNATION "-20" SIGNIFIES BAR ASSOCIATED WITH PIER 20 OF THE EASTBOUND DESIGN NO. 3408 BRIDGE

* d3 THRU d14 BARS MAY BE SUBSTITUTED WITH d38 & dXX BARS CONNECTED WITH A MECHANICAL BAR SPLICER. SEE DESIGN SHEET 20.

** 1'-0 END PORTION OF BAR TO BE STRAIGHT FOR CONNECTION OF MECHANICAL BAR SPLICER.

NOTE:
THE LENGTHS SHOWN FOR COLUMN VERTICAL BARS ARE TO THE CENTER OF THE MECHANICAL SPLICE. ADJUSTMENTS TO THE COLUMN BAR LENGTHS MAY BE REQUIRED DEPENDING ON THE SPLICE MECHANISM USED.

whks
engineers + planners + land surveyors

DESIGN FOR VARIABLE SKEW (L.A.)

2271'-6 x VARI. CONTINUOUS WELDED GIRDER BRIDGE-EBL W/14' BIKE TRAIL

138'-10 & 151'-0 7/8 END SPANS MULTIPLE LENGTH INTERIOR SPANS

PIER 20 DETAILS

STA. 6792+60.93 - 52' LEFT ℄ I-74 OCTOBER, 2015

SCOTT COUNTY

IOWA DEPARTMENT OF TRANSPORTATION - HIGHWAY DIVISION

DESIGN SHEET NO. 38 OF 282 FILE NO. 30253 DESIGN NO. 3408

BENCH MARK NO. 500: STA. 6781+18.92 LT. 161.19'
ELEV. 575.797, CHISELED "X" IN BOLT E. SIDE
CONCRETE STRUCTURE

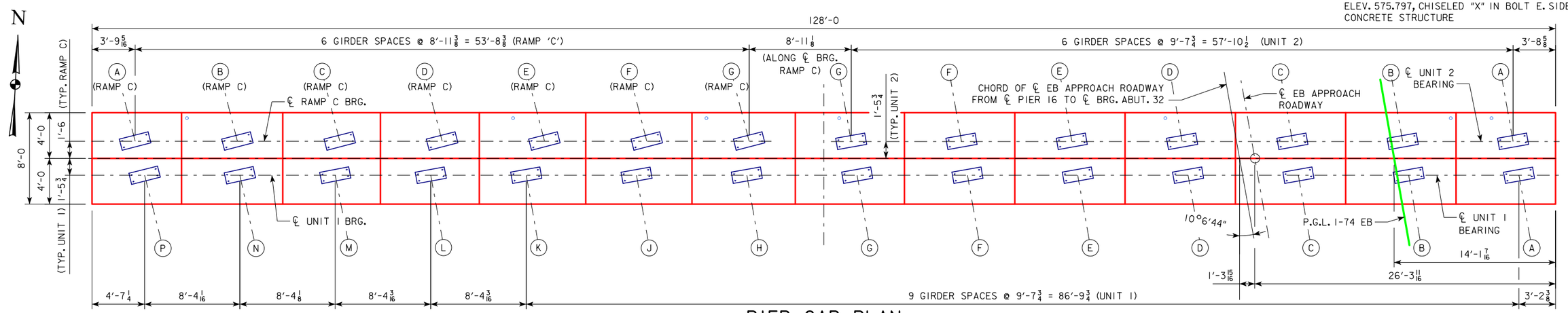

PIER CAP PLAN

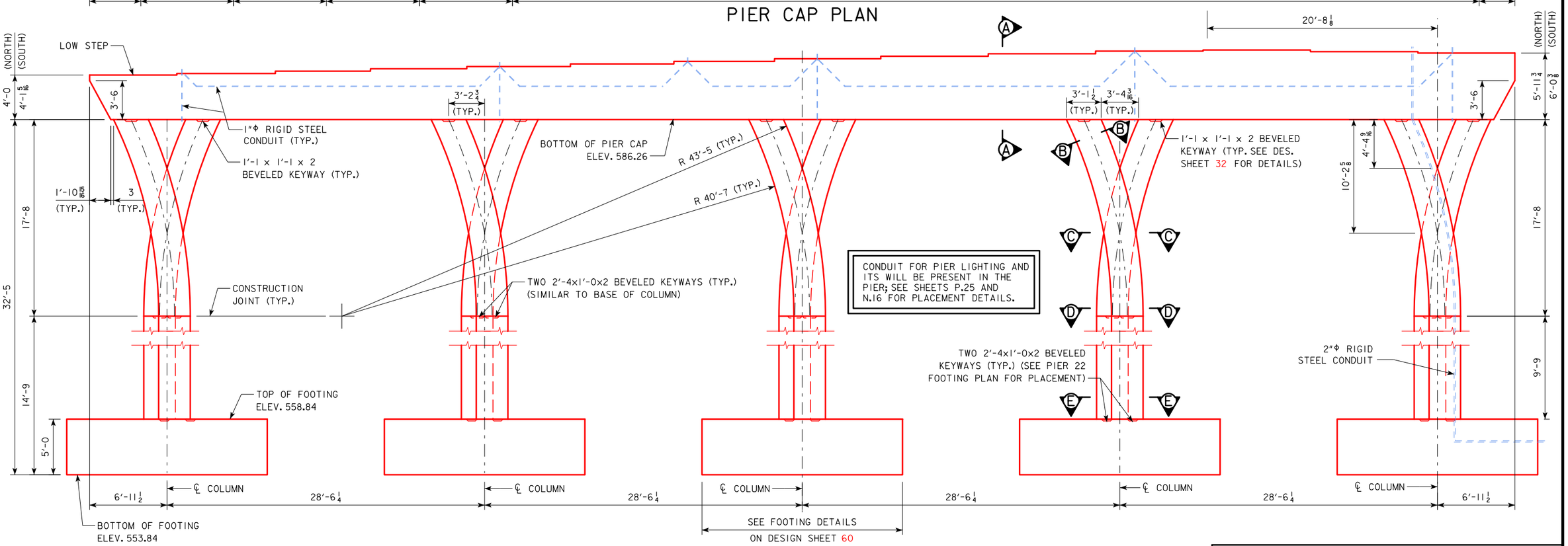

PIER ELEVATION
(LOOKING UPSTATION)

NOTES:
SEE DESIGN SHEET 20 FOR PIER NOTES.
SEE DESIGN SHEET 41 FOR SECTIONS A-A, B-B, C-C, D-D, & E-E.
SEE DESIGN SHEET 42 FOR PIER CAP ELEVATIONS.
SEE DESIGN SHEET 42 FOR STEP SPACING.
SEE DESIGN SHEET 43 FOR PIER CAP KEYWAY DETAILS.
SEE DESIGN SHEET 60 FOR FOOTING DIMENSIONS.
SEE DESIGN SHEET 57 FOR ANCHOR BOLT LAYOUT.
SEE DESIGN SHEET 60 FOR COLUMN KEYWAY DETAILS.

whks
engineers + planners + land surveyors

DESIGN FOR VARIABLE SKEW (L.A.)
2271'-6 x VARI. CONTINUOUS WELDED GIRDER BRIDGE-EBL W/14' BIKE TRAIL
138'-10 & 151'-0 7/8 END SPANS MULTIPLE LENGTH INTERIOR SPANS
PIER 21 DETAILS
STA. 6792+60.93 - 52' LEFT ℄ I-74 OCTOBER, 2015
SCOTT COUNTY
IOWA DEPARTMENT OF TRANSPORTATION - HIGHWAY DIVISION
DESIGN SHEET NO. 39 OF 282 FILE NO. 30253 DESIGN NO. 3408

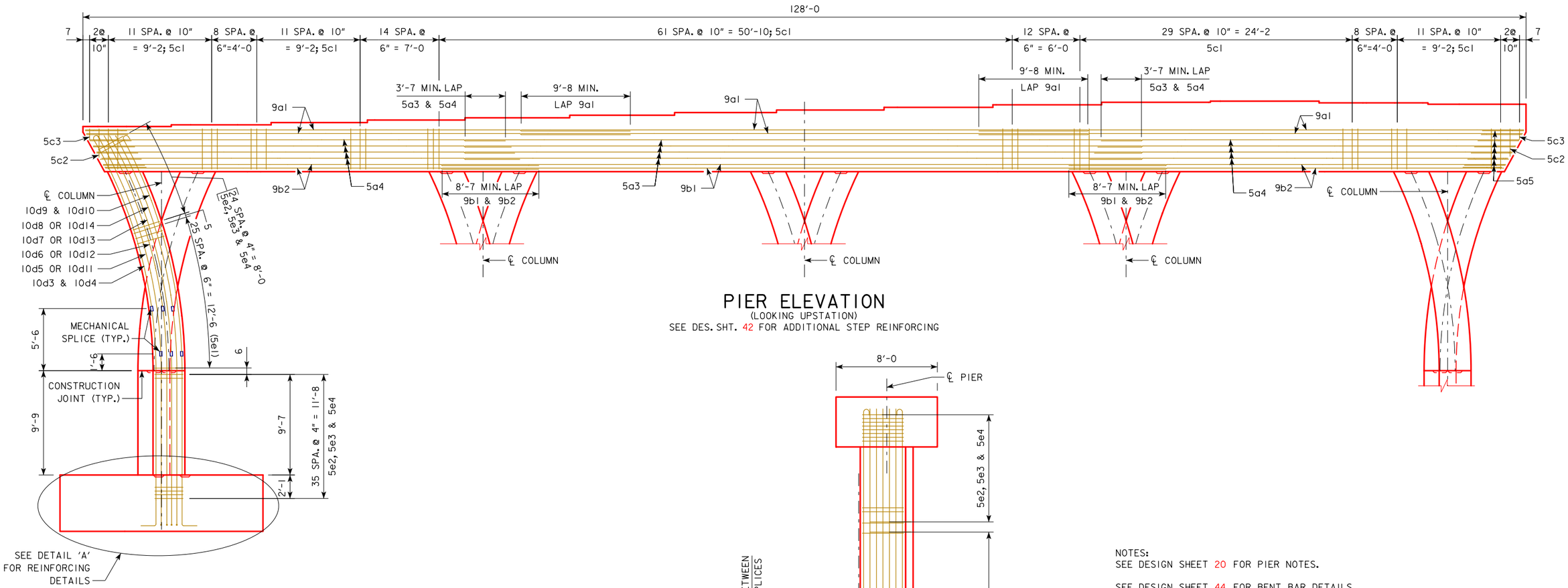

PIER ELEVATION

(LOOKING UPSTATION)

SEE DES. SHT. 42 FOR ADDITIONAL STEP REINFORCING

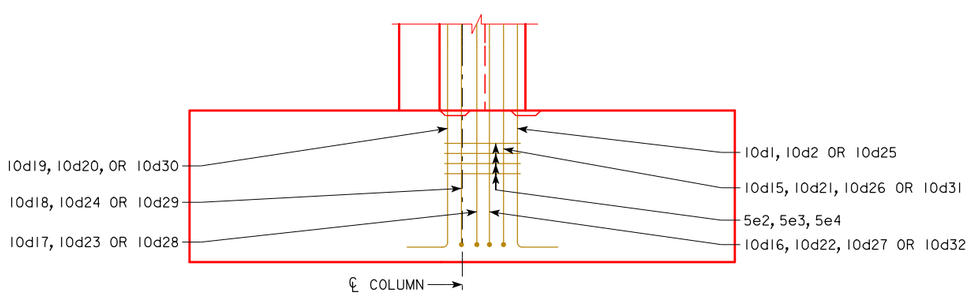

DETAIL 'A'

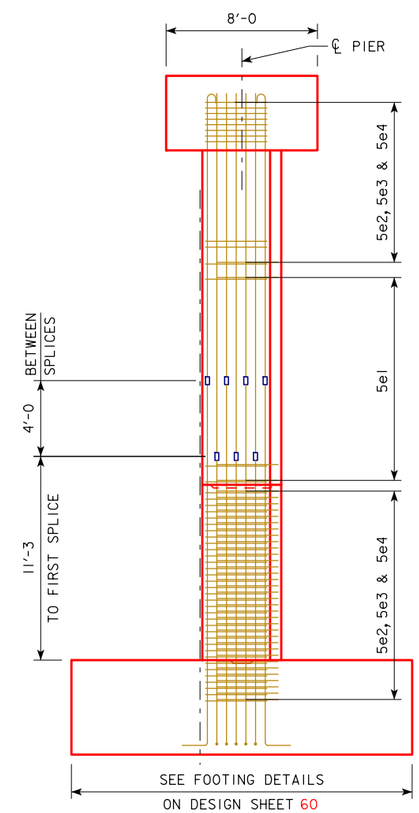

PIER END VIEW

NOTES:

SEE DESIGN SHEET 20 FOR PIER NOTES.

SEE DESIGN SHEET 44 FOR BENT BAR DETAILS.

MECHANICAL SPLICES SHALL BE PROVIDED FOR 10d BARS, ALTERNATE BARS BEING SPLICED, SUCH THAT NO MORE THAN HALF OF THE BARS ARE SPLICED AT ONE LOCATION. SPACE SPLICE LOCATIONS AT 4'-0 MINIMUM ALONG ℄ OF COLUMN.

THE MECHANICAL SPLICES USED SHALL MEET THE REQUIREMENTS OF MATERIALS I.M.451, APPENDIX E.

THE COST OF ALL MECHANICAL SPLICES IS TO BE INCLUDED IN THE PRICE BID FOR "REINFORCING STEEL, EPOXY COATED" AND NO SEPARATE PAYMENT WILL BE MADE. THE WEIGHT OF THE MECHANICAL SPLICES IS NOT INCLUDED IN THE QUANTITY SHOWN ON DES. SH. 44 FOR "REINFORCING STEEL, EPOXY COATED". A TOTAL OF 192 MECHANICAL SPLICES WILL BE REQUIRED AT PIER 21.

SEE DESIGN SHEET 60 FOR FOOTING REINFORCEMENT DETAILS.

whks
engineers + planners + land surveyors

DESIGN FOR VARIABLE SKEW (L.A.)

2271'-6 x VARI. CONTINUOUS WELDED GIRDER BRIDGE-EBL W/14' BIKE TRAIL

138'-10 & 151'-0⅞ END SPANS MULTIPLE LENGTH INTERIOR SPANS

PIER 21 DETAILS

STA. 6792+60.93 - 52' LEFT ℄ I-74 OCTOBER, 2015

SCOTT COUNTY

IOWA DEPARTMENT OF TRANSPORTATION - HIGHWAY DIVISION

DESIGN SHEET NO. 40 OF 282 FILE NO. 30253 DESIGN NO. 3408

DESIGN TEAM RE / TA / JS	SCOTT COUNTY	PROJECT NUMBER BRFIM-074-1(200)5--05-82	SHEET NUMBER 41

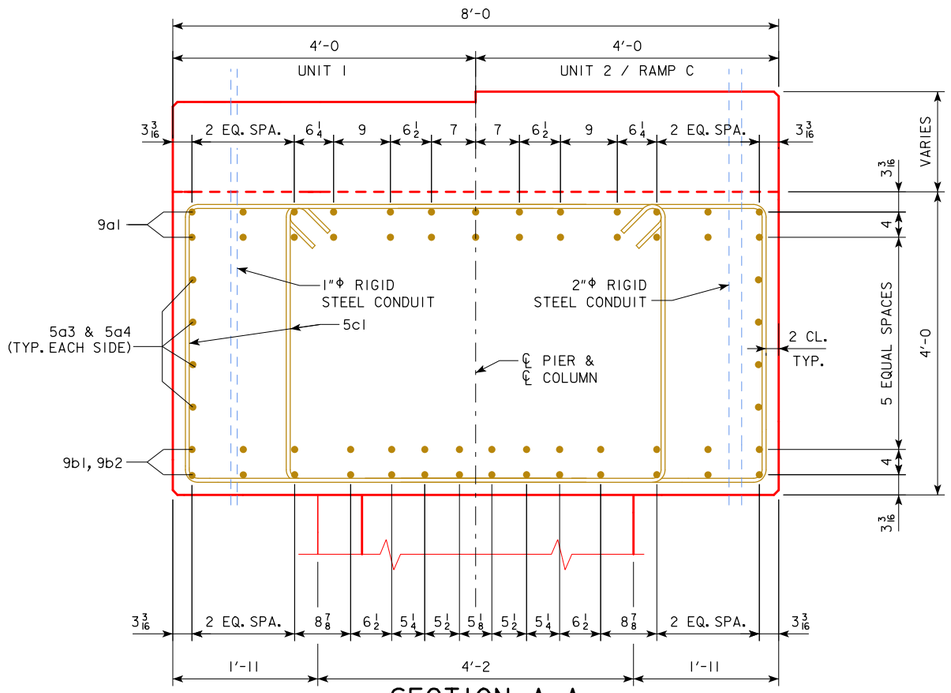

SECTION A-A

STEP REINFORCING NOT SHOWN. SEE DESIGN SHEET 42 FOR DETAILS

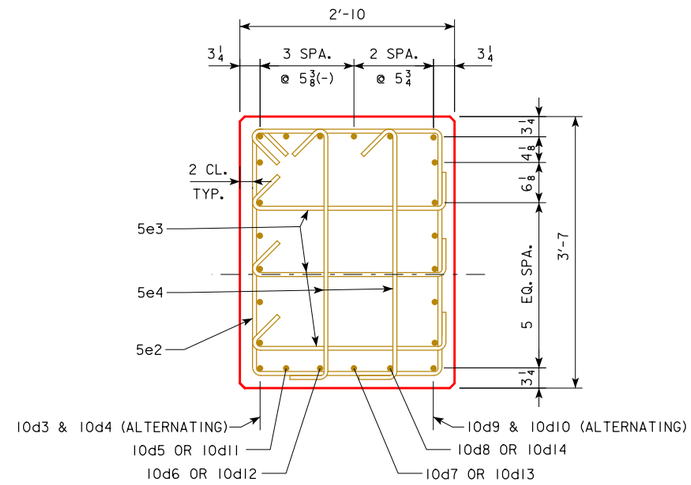

SECTION B-B

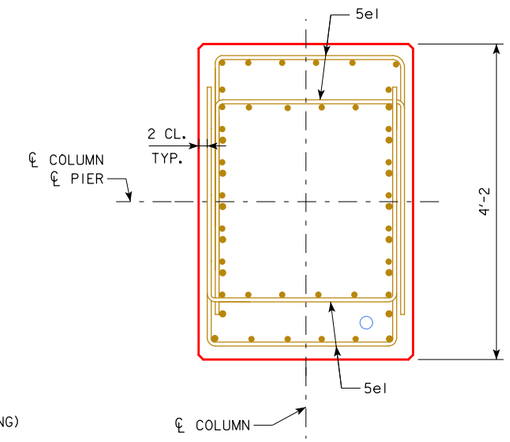

SECTION C-C

NOTES:

SEE DESIGN SHEET 20 FOR PIER NOTES.

SEE DESIGN SHEET 44 FOR BENT BAR DETAILS.

FOR LOCATIONS OF SECTIONS A-A, B-B, C-C, D-D & E-E, SEE DESIGN SHEET 39.

ALTERNATE DIRECTION OF 5e3 & 5e4 CROSS TIES SUCH THAT 135° AND 90° HOOKS SWITCH ENDS AT EACH VERTICAL LAYER AND MAINTAIN A MINIMUM OF 1½" CLEAR COVER TO TIES.

10d25 THRU 10d32 ARE SHOWN BUNDLED VERTICALLY FOR CLARITY. ACTUAL BUNDLE ORIENTATION SHALL BE SIDE BY SIDE.

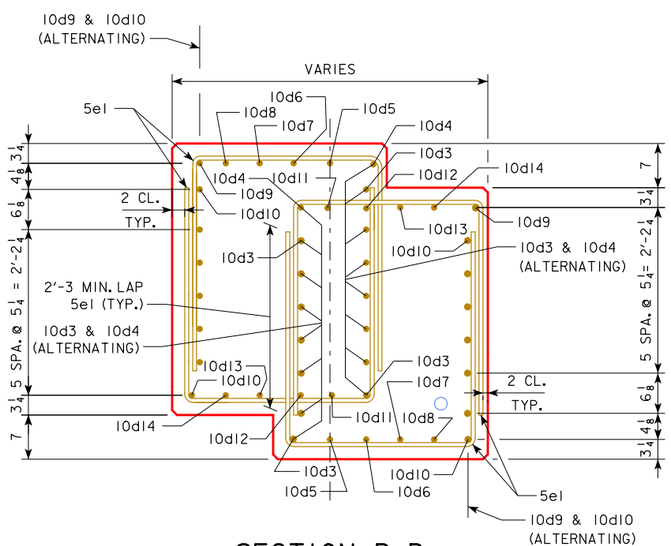

SECTION D-D

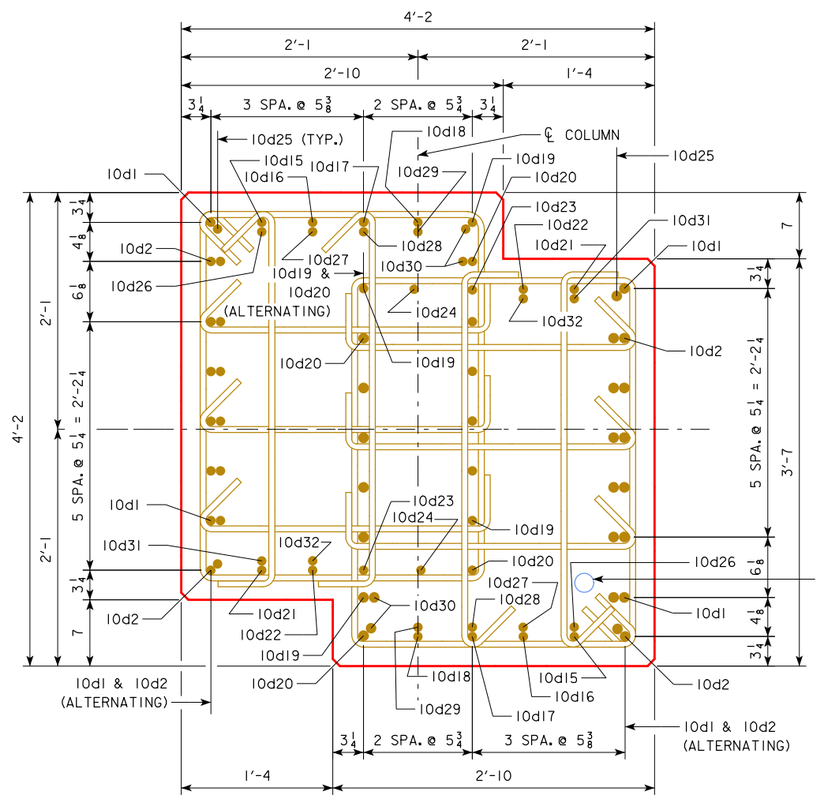

SECTION E-E

DESIGN FOR VARIABLE SKEW (L.A.)

2271'-6 x VARI. CONTINUOUS WELDED GIRDER BRIDGE-EBL W/14' BIKE TRAIL

138'-10 & 151'-0 7/8 END SPANS MULTIPLE LENGTH INTERIOR SPANS

PIER 21 DETAILS

STA. 6792+60.93 - 52' LEFT ℄ I-74 OCTOBER, 2015

SCOTT COUNTY

IOWA DEPARTMENT OF TRANSPORTATION - HIGHWAY DIVISION

DESIGN SHEET NO. 41 OF 282 FILE NO. 30253 DESIGN NO. 3408

whks engineers + planners + land surveyors

DESIGN TEAM RE / TA / JS	SCOTT COUNTY	PROJECT NUMBER BRFIM-074-1(200)5--05-82	SHEET NUMBER 42

BENCH MARK NO. 500: STA. 6781+18.92 LT. 161.19'
ELEV. 575.797, CHISELED "X" IN BOLT E. SIDE
CONCRETE STRUCTURE

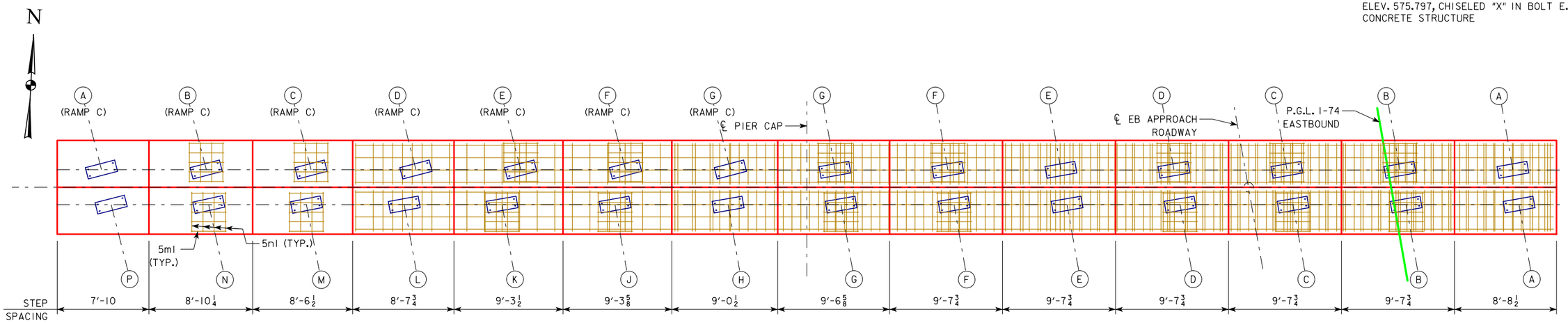

STEP REINFORCEMENT PLAN

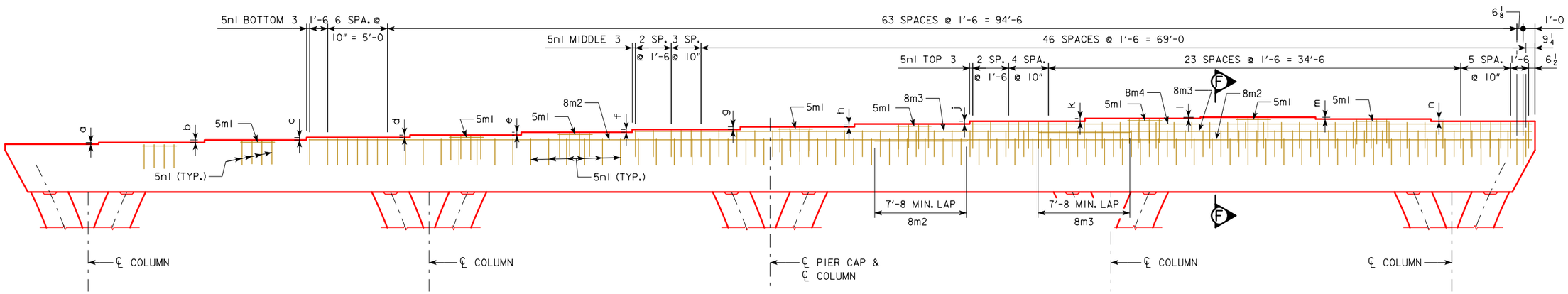

STEP REINFORCEMENT ELEVATON (NORTH & SOUTH BEARING LINES)

NOTE:
SEE DESIGN SHEET 43 FOR SECTION F-F.

STEP ELEVATIONS (UNIT 1)

GIRDER	ELEVATION
A	592.29
B	592.47
C	592.62
D	592.52
E	592.29
F	592.06
G	591.83
H	591.60
J	591.37
K	591.14
L	590.94
M	590.72
N	590.51
P	590.37

STEP ELEVATIONS (UNIT 2)

GIRDER	ELEVATION
A	592.24
B	592.41
C	592.56
D	592.47
E	592.24
F	592.01
G	591.74
-	-
-	-
-	-
-	-
-	-
-	-
-	-
-	-

STEP ELEVATIONS (RAMP C)

GIRDER	ELEVATION
A	590.26
B	590.52
C	590.74
D	590.97
E	591.20
F	591.43
G	591.59
-	-
-	-
-	-
-	-
-	-
-	-
-	-
-	-

STEP HEIGHTS

DIM.	S. BRG. (UNIT 1)	N. BRG. (UNIT 2)
a	1 11/16	3 1/8
b	2 1/2	2 5/8
c	2 5/8	2 3/4
d	2 3/8	2 3/4
e	2 3/4	2 3/4
f	2 3/4	1 15/16
g	2 3/4	1 13/16
h	2 3/4	3 1/4
j	2 3/4	2 3/4
k	2 3/4	2 3/4
l	1 1/16	1 1/16
m	1 13/16	1 13/16
n	2 3/16	2 1/16

whks
engineers + planners + land surveyors

DESIGN FOR VARIABLE SKEW (L.A.)

2271'-6 x VARI. CONTINUOUS WELDED GIRDER BRIDGE-EBL W/14' BIKE TRAIL

138'-10 & 151'-0 7/8 END SPANS MULTIPLE LENGTH INTERIOR SPANS

PIER 21 CAP DETAILS

STA. 6792+60.93 - 52' LEFT ℄ I-74 OCTOBER, 2015

SCOTT COUNTY

IOWA DEPARTMENT OF TRANSPORTATION - HIGHWAY DIVISION

DESIGN SHEET NO. 42 OF 282 FILE NO. 30253 DESIGN NO. 3408

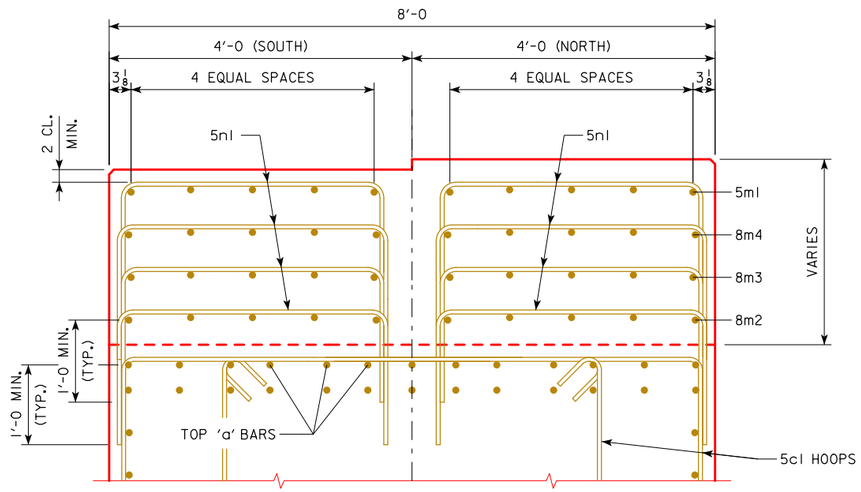

PART SECTION F-F

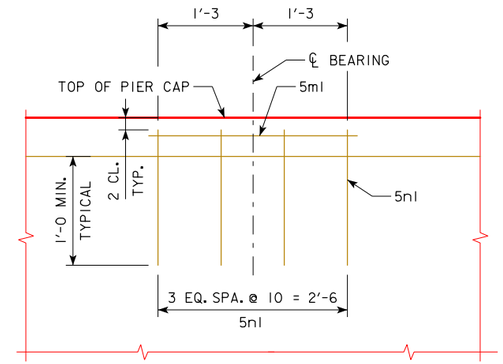

STEP REINFORCEMENT DETAIL

CENTER 5m1 & 5n1 BARS UNDER BEAM BEARING

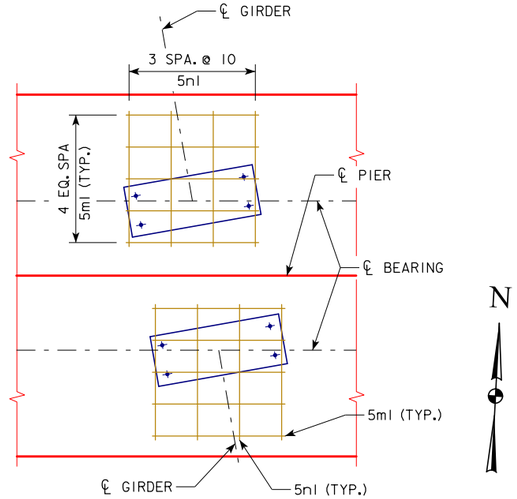

ANCHOR BOLT WITH
STEP REINFORCEMENT LAYOUT

(SEE DESIGN SHEET 56 FOR ANCHOR BOLT LAYOUT)

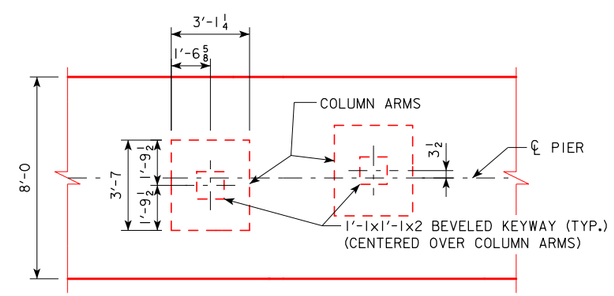

PIER CAP PLAN VIEW

KEYWAY DETAILS

NOTES:
SEE DESIGN SHEET 20 FOR PIER NOTES.
SEE DESIGN SHEET 44 FOR BENT BAR DETAILS.
SEE DESIGN SHEET 42 FOR STEP REINFORCEMENT LAYOUT.
SEE DESIGN SHEET 42 FOR LOCATION OF PART SECTION F-F.

whks
engineers + planners + land surveyors

DESIGN FOR VARIABLE SKEW (L.A.)

2271'-6 x VARI. CONTINUOUS WELDED GIRDER BRIDGE-EBL W/14' BIKE TRAIL

138'-10 & 151'-0 7/8 END SPANS MULTIPLE LENGTH INTERIOR SPANS

PIER 21 DETAILS

STA. 6792+60.93 - 52' LEFT ℄ I-74 OCTOBER, 2015

SCOTT COUNTY

IOWA DEPARTMENT OF TRANSPORTATION - HIGHWAY DIVISION

DESIGN SHEET NO. 43 OF 282 FILE NO. 30253 DESIGN NO. 3408

BENT BAR DETAILS

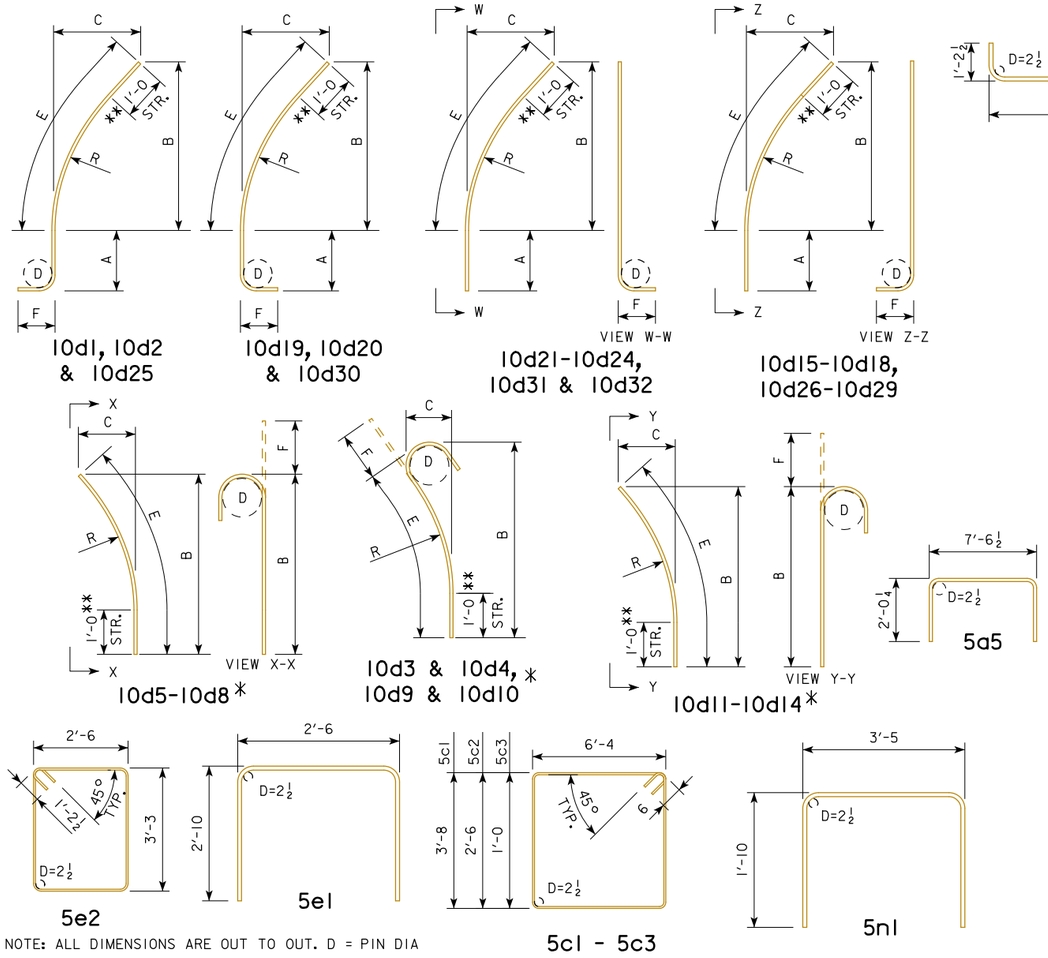

NOTE: ALL DIMENSIONS ARE OUT TO OUT. D = PIN DIA

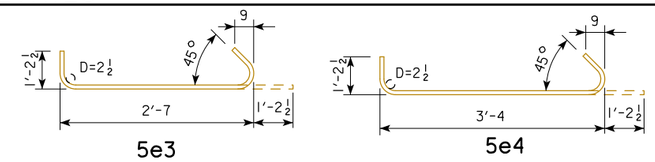

d1 - d32 TABLE							
BAR	A	B	C	D	E	F	R
10d1-21	14'-3 1/2	1'-6	1 5/8	10 3/4	1'-6	1'-10	43'-1 1/8
10d2-21	14'-3 1/2	5'-6	5 1/2	10 3/4	5'-6 1/8	1'-10	43'-1 1/8
10d3-21	-	19'-6 7/8	4'-8 7/8	10 3/4	20'-0 7/8	1'-5	40'-9 5/8
10d4-21	-	15'-10 5/8	3'-0 5/8	10 3/4	16'-0 3/4	1'-5	40'-9 5/8
10d5-21	-	18'-7 3/8	4'-6 1/4	10 3/4	19'-3 5/8	1'-5	41'-3 3/8
10d6-21	-	14'-11 1/8	2'-10 1/4	10 3/4	15'-3 1/4	1'-5	41'-9 1/8
10d7-21	-	18'-7 1/4	4'-4 7/8	10 3/4	19'-3 1/8	1'-5	42'-2 3/8
10d8-21	-	14'-10 7/8	2'-9 3/8	10 3/4	15'-2 3/4	1'-5	42'-7 3/4
10d9-21	-	19'-6 3/4	4'-5 1/2	10 3/4	19'-11 5/8	1'-5	43'-1 1/8
10d10-21	-	15'-10	2'-10 3/8	10 3/4	15'-11 1/2	1'-5	43'-1 1/8
10d11-21	-	18'-7 3/8	4'-6 1/4	10 3/4	19'-3 5/8	1'-5	41'-3 3/8
10d12-21	-	14'-11 1/8	2'-10 1/4	10 3/4	15'-3 1/4	1'-5	41'-9 1/8
10d13-21	-	18'-7 1/4	4'-4 7/8	10 3/4	19'-3 1/8	1'-5	42'-2 3/8
10d14-21	-	14'-10 7/8	2'-9 3/8	10 3/4	15'-2 3/4	1'-5	42'-7 3/4
10d15-21	14'-3 1/2	5'-6	5 1/2	10 3/4	5'-6 1/8	1'-10	42'-7 3/4
10d16-21	14'-3 1/2	1'-6	1 5/8	10 3/4	1'-6	1'-10	42'-2 3/8
10d17-21	14'-3 1/2	5'-6	5 5/8	10 3/4	5'-6 1/4	1'-10	41'-9 1/8
10d18-21	14'-3 1/2	1'-6	1 5/8	10 3/4	1'-6	1'-10	41'-3 3/8
10d19-21	14'-3 1/2	5'-6	5 3/4	10 3/4	5'-6 1/4	1'-10	40'-9 5/8
10d20-21	14'-3 1/2	1'-6	1 5/8	10 3/4	1'-6	1'-10	40'-9 5/8
10d21-21	14'-3 1/2	5'-6	5 1/2	10 3/4	5'-6 1/8	1'-10	42'-7 3/4
10d22-21	14'-3 1/2	1'-6	1 5/8	10 3/4	1'-6	1'-10	42'-2 3/8
10d23-21	14'-3 1/2	5'-6	5 5/8	10 3/4	5'-6 1/4	1'-10	41'-9 1/8
10d24-21	14'-3 1/2	1'-6	1 5/8	10 3/4	1'-6	1'-10	41'-3 3/8
10d25-21	14'-3 1/2	10'-11	1'-6	10 3/4	11'-0 3/8	1'-10	43'-1 1/8
10d26-21	14'-3 1/2	10'-11	1'-6 1/4	10 3/4	11'-0 1/2	1'-10	42'-7 3/4
10d27-21	14'-3 1/2	10'-11	1'-6 3/8	10 3/4	11'-0 1/2	1'-10	42'-2 3/8
10d28-21	14'-3 1/2	10'-11	1'-6 5/8	10 3/4	11'-0 1/2	1'-10	41'-9 1/8
10d29-21	14'-3 1/2	10'-11	1'-6 7/8	10 3/4	11'-0 5/8	1'-10	41'-3 3/8
10d30-21	14'-3 1/2	10'-11	1'-7	10 3/4	11'-0 5/8	1'-10	40'-9 5/8
10d31-21	14'-3 1/2	10'-11	1'-6 1/4	10 3/4	11'-0 1/2	1'-10	42'-7 3/4
10d32-21	14'-3 1/2	10'-11	1'-6 3/8	10 3/4	11'-0 1/2	1'-10	42'-2 3/8

'R' IS THE INSIDE OF RADIUS OF REBAR. DIMENSION 'C' IS APPROX.

REINFORCING BAR LIST - PIER 21

	BAR	LOCATION	SHAPE	NO.	LENGTH	WEIGHT
EPOXY COATED BARS	9a1-21	CAP, LONGITUDINAL-TOP		78	49'-2	13,039
	5a3-21	CAP, LONGITUDINAL-SIDE		8	60'-0	501
	5a4-21	CAP, LONGITUDINAL-SIDE		16	37'-1	619
	5a5-21	CAP, ENDS		16	11'-7	193
	9b1-21	CAP, LONGITUDINAL-BOTTOM		28	60'-0	5,712
	9b2-21	CAP, LONGITUDINAL-BOTTOM		56	40'-10	7,775
	5c1-21	CAP, STIRRUP		332	21'-0	7,272
	5c2-21	CAP, STIRRUP-END		4	18'-8	78
	5c3-21	CAP, STIRRUP-END		4	15'-8	65
	10d1-21	COLUMN VERTICAL TO FOOTING		40	17'-8	3,041
	10d2-21	COLUMN VERTICAL TO FOOTING		40	21'-8	3,729
*	10d3-21	COLUMN VERTICAL		40	21'-6	3,701
*	10d4-21	COLUMN VERTICAL		40	17'-6	3,012
*	10d5-21	COLUMN VERTICAL		10	20'-9	893
*	10d6-21	COLUMN VERTICAL		10	16'-9	721
*	10d7-21	COLUMN VERTICAL		10	20'-9	893
*	10d8-21	COLUMN VERTICAL		10	16'-8	717
*	10d9-21	COLUMN VERTICAL		40	21'-5	3,686
*	10d10-21	COLUMN VERTICAL		40	17'-5	2,998
*	10d11-21	COLUMN VERTICAL		10	20'-9	893
*	10d12-21	COLUMN VERTICAL		10	16'-9	721
*	10d13-21	COLUMN VERTICAL		10	20'-9	893
*	10d14-21	COLUMN VERTICAL		10	16'-8	717
	10d15-21	COLUMN VERTICAL TO FOOTING		10	21'-8	932
	10d16-21	COLUMN VERTICAL TO FOOTING		10	17'-8	760
	10d17-21	COLUMN VERTICAL TO FOOTING		10	21'-8	932
	10d18-21	COLUMN VERTICAL TO FOOTING		10	17'-8	760
	10d19-21	COLUMN VERTICAL TO FOOTING		40	21'-8	3,729
	10d20-21	COLUMN VERTICAL TO FOOTING		40	17'-8	3,041
	10d21-21	COLUMN VERTICAL TO FOOTING		10	21'-8	932
	10d22-21	COLUMN VERTICAL TO FOOTING		10	17'-8	760
	10d23-21	COLUMN VERTICAL TO FOOTING		10	21'-8	932
	10d24-21	COLUMN VERTICAL TO FOOTING		10	17'-8	760
	10d25-21	COLUMN VERTICAL TO FOOTING		80	27'-2	9,352
	10d26-21	COLUMN VERTICAL TO FOOTING		10	27'-2	1,169
	10d27-21	COLUMN VERTICAL TO FOOTING		10	27'-2	1,169
	10d28-21	COLUMN VERTICAL TO FOOTING		10	27'-2	1,169
	10d29-21	COLUMN VERTICAL TO FOOTING		10	27'-2	1,169
	10d30-21	COLUMN VERTICAL TO FOOTING		20	27'-3	2,345
	10d31-21	COLUMN VERTICAL TO FOOTING		10	27'-2	1,169
	10d32-21	COLUMN VERTICAL TO FOOTING		10	27'-2	1,169
	5e1-21	COLUMN STIRRUP		520	8'-2	4,429
	5e2-21	COLUMN STIRRUP, TOP & BOTT. OF COLUMN		610	13'-11	8,854
	5e3-21	COLUMN TIE		1830	5'-0	9,543
	5e4-21	COLUMN TIE		1220	5'-9	7,317
	5m1-21	STEP, LONGITUDINAL		90	3'-0	282
	8m2-21	STEP, LONGITUDINAL		20	55'-1	2,941
	8m3-21	STEP, LONGITUDINAL		20	41'-6	2,216
	8m4-21	STEP, LONGITUDINAL		10	46'-11	1,253
	5n1-21	STEP, TRANSVERSE		392	7'-1	2,896
		REINFORCING STEEL - EPOXY COATED - TOTAL (LBS.)				133,849
NON-COATED	5f1-21	FOOTING, TOP - TRANSVERSE		90	17'-6	1,643
	5f2-21	FOOTING, TOP - LONGITUDINAL		90	17'-6	1,643
	10g1-21	FOOTING, BOTTOM - TRANSVERSE		135	17'-6	10,166
	10g2-21	FOOTING, BOTTOM - LONGITUDINAL		135	17'-6	10,166
		REINFORCING STEEL - NON-COATED - TOTAL (LBS.)				23,618

NOTE:
DESIGNATION "-21" SIGNIFIES BAR ASSOCIATED WITH PIER 21 OF THE EASTBOUND DESIGN NO. 3408 BRIDGE

ESTIMATED QUANTITIES - PIER 21

ITEM	UNIT	TOTAL
EXCAVATION, CL 20	CY	516
EXCAVATION, CL 22	CY	621
STRUCTURAL CONCRETE (BRIDGE)	CY	300.0
HIGH PERFORMANCE STRUCTURAL CONCRETE	CY	202.3
REINFORCING STEEL	LB	23,618
REINFORCING STEEL, EPOXY COATED	LB	133,849
HP SELF-CONSOLIDATING CONCRETE (HP-SCC)	CY	84.0

NOTE:
THE LENGTHS SHOWN FOR COLUMN VERTICAL BARS ARE TO THE CENTER OF THE MECHANICAL SPLICE. ADJUSTMENTS TO THE COLUMN BAR LENGTHS MAY BE REQUIRED DEPENDING ON THE SPLICE MECHANISM USED.

* d3 THRU d14 BARS MAY BE SUBSTITUTED WITH d38 & dXX BARS CONNECTED WITH A MECHANICAL BAR SPLICER. SEE DESIGN SHEET 20.

** 1'-0 END PORTION OF BAR TO BE STRAIGHT FOR CONNECTION OF MECHANICAL BAR SPLICER.

STRUCT. CONC. PLACEMENT QUANTITIES

STRUCTURAL CONCRETE (BRIDGE)		
LOCATION	UNIT	QUANTITY
FOOTING	CY	300.0
TOTAL STRUCTURAL CONCRETE (BRIDGE)		300.0
HIGH PERFORMANCE STRUCTURAL CONCRETE		
LOCATION	UNIT	QUANTITY
CAP	CY	202.3
TOTAL HIGH PERFORMANCE STRUCTURAL CONCRETE		202.3
HIGH PERFORMANCE SELF-CONSOLIDATING CONCRETE (HP-SCC)		
LOCATION	UNIT	QUANTITY
COLUMN	CY	84.0
TOTAL HIGH PERFORMANCE SELF-CONSOLIDATING CONC. (HP-SCC)		84.0

whks
engineers + planners + land surveyors

DESIGN FOR VARIABLE SKEW (L.A.)

2271'-6 x VARI. CONTINUOUS WELDED GIRDER BRIDGE-EBL W/14' BIKE TRAIL

138'-10 & 151'-0 7/8 END SPANS MULTIPLE LENGTH INTERIOR SPANS

PIER 21 DETAILS

STA. 6792+60.93 - 52' LEFT ℄ I-74 OCTOBER, 2015

SCOTT COUNTY

IOWA DEPARTMENT OF TRANSPORTATION - HIGHWAY DIVISION

DESIGN SHEET NO. 44 OF 282 FILE NO. 30253 DESIGN NO. 3408

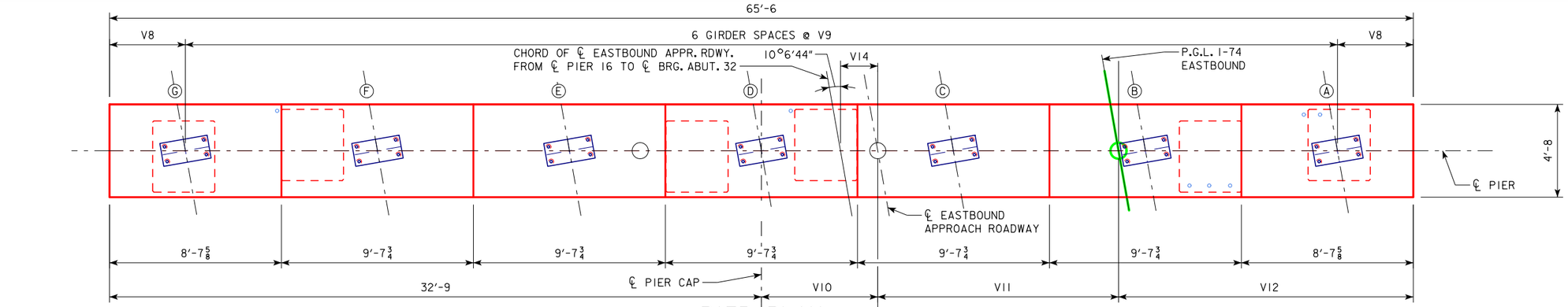

PIER PLAN

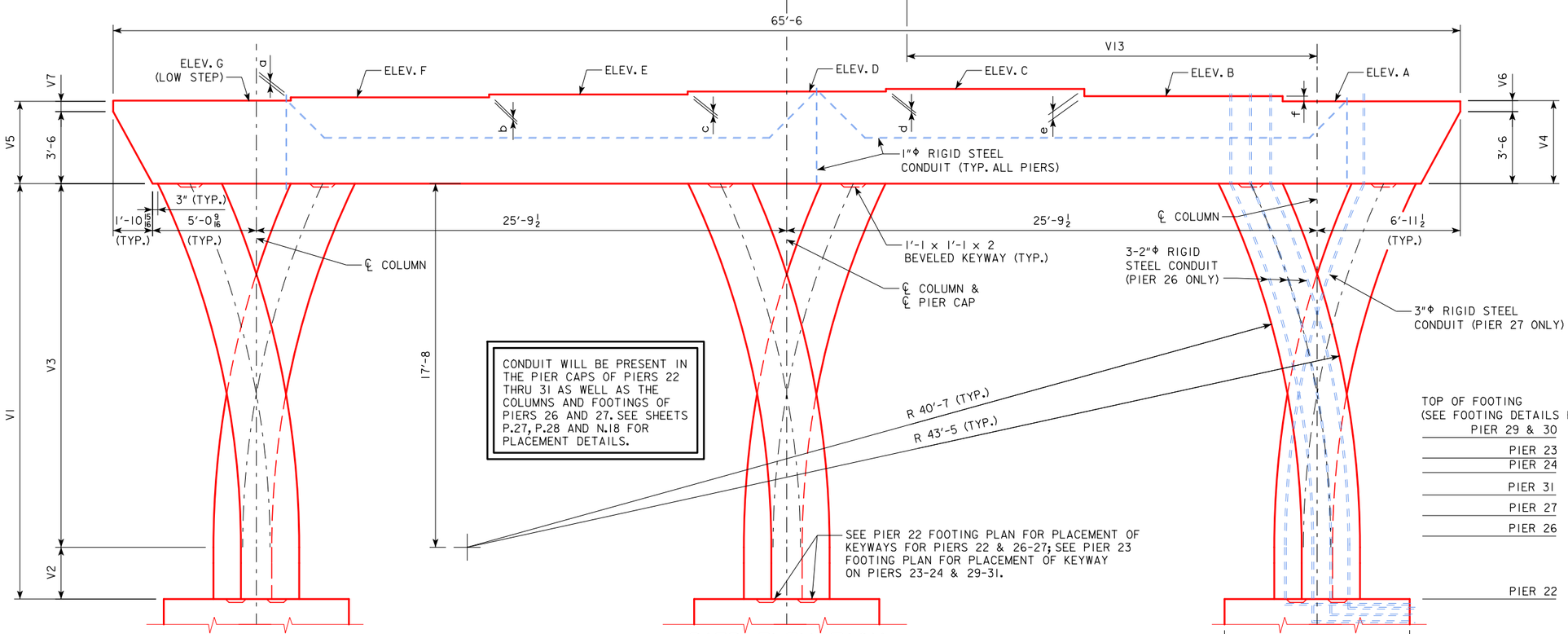

CONDUIT WILL BE PRESENT IN THE PIER CAPS OF PIERS 22 THRU 31 AS WELL AS THE COLUMNS AND FOOTINGS OF PIERS 26 AND 27. SEE SHEETS P.27, P.28 AND N.18 FOR PLACEMENT DETAILS.

PIER ELEVATION
(PIERS 22-24, 26-27, 29-31)
(LOOKING UPSTATION)

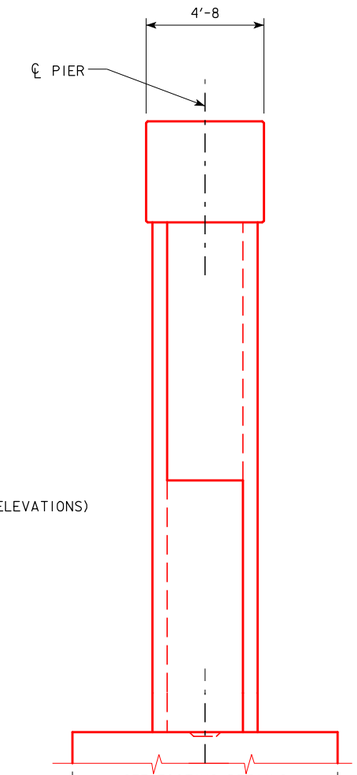

PIER END VIEW

PIER DIMENSIONS - PIERS 22-24, 26-27, 29-31

PIER NO.	V1	V2	V3	V4	V5	V6	V7	V8	V9	V10	V11	V12	V13	V14
22	21'-0	3'-4	17'-8	4'-4 11/16	4'-0	10 11/16	6	3'-9 3/4	9'-7 3/4	6'-1 1/8	12'-2 1/4	14'-5 11/16	19'-8 3/8	1'-7 1/4
23	13'-10	——	13'-10	4'-3 5/8	4'-0	9 5/8	6	3'-9 3/4	9'-7 3/4	6'-1 1/8	12'-2 1/4	14'-5 11/16	19'-8 3/8	1'-10 1/2
24	14'-4	——	14'-4	4'-2 1/2	4'-0	8 1/2	6	3'-9 3/4	9'-7 3/4	6'-1 1/8	12'-2 1/4	14'-5 11/16	19'-8 3/8	2'-1 3/4
26	17'-6	——	17'-6	4'-2 3/16	4'-0	8 3/16	6	3'-9 3/4	9'-7 3/4	6'-1 1/8	12'-2 1/4	14'-5 11/16	19'-8 3/8	2'-8 5/16
27	15'-6	——	15'-6	4'-2 3/16	4'-0	8 3/16	6	3'-9 3/4	9'-7 3/4	6'-1 1/8	12'-2 1/4	14'-5 11/16	19'-8 3/8	3'-0 3/8
29	12'-4	——	12'-4	4'-2 1/16	4'-0	8 1/16	6	3'-9 3/4	9'-7 3/4	6'-1 1/8	12'-2 1/4	14'-5 11/16	19'-8 3/8	3'-7 1/2
30	12'-4	——	12'-4	4'-1 13/16	4'-0	7 13/16	6	3'-9 1/2	9'-7 13/16	6'-1 3/16	12'-2 5/16	14'-5 1/2	19'-8 5/16	3'-9 3/4
31	14'-6	——	14'-6	4'-0 1/8	4'-0	6 1/8	6	3'-8 13/16	9'-8 1/16	6'-1 5/16	12'-2 5/8	14'-5 1/16	19'-8 3/16	2'-8 7/8

NOTES:
SEE DESIGN SHEET 20 FOR PIER NOTES.

SEE DESIGN SHEET 55 FOR PIER CAP ELEVATIONS & STEP HEIGHTS.

SEE INDIVIDUAL PIER ELEVATIONS IN DESIGN SHEETS 47 & 48 FOR LOCATIONS OF CROSS SECTIONS ALONG THE COLUMN.

SEE DESIGN SHEET 57 FOR ANCHOR BOLT LAYOUT.

SEE DESIGN SHEET 60 FOR COLUMN KEYWAY DETAILS.

SEE DESIGN SHEET 32 FOR PIER CAP KEYWAY DETAILS.

whks
engineers + planners + land surveyors

DESIGN FOR VARIABLE SKEW (L.A.)

2271'-6 x VARI. CONTINUOUS WELDED GIRDER BRIDGE-EBL W/14' BIKE TRAIL

138'-10 & 151'-0 7/8 END SPANS MULTIPLE LENGTH INTERIOR SPANS

PIERS 22-24, 26-27, 29-31 DETAILS

STA. 6792+60.93 - 52' LEFT ℄ I-74 OCTOBER, 2015

SCOTT COUNTY

IOWA DEPARTMENT OF TRANSPORTATION - HIGHWAY DIVISION

DESIGN SHEET NO. 45 OF 282 FILE NO. 30253 DESIGN NO. 3408

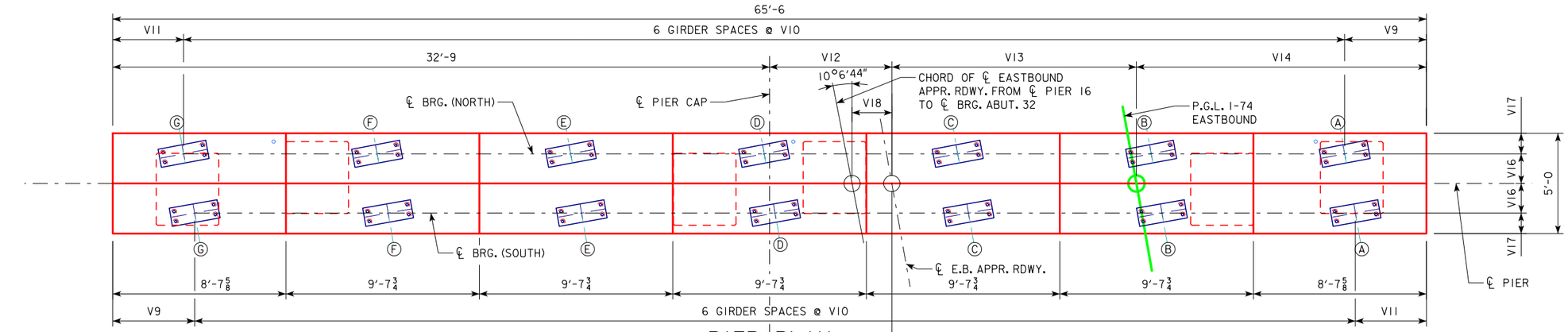

PIER PLAN

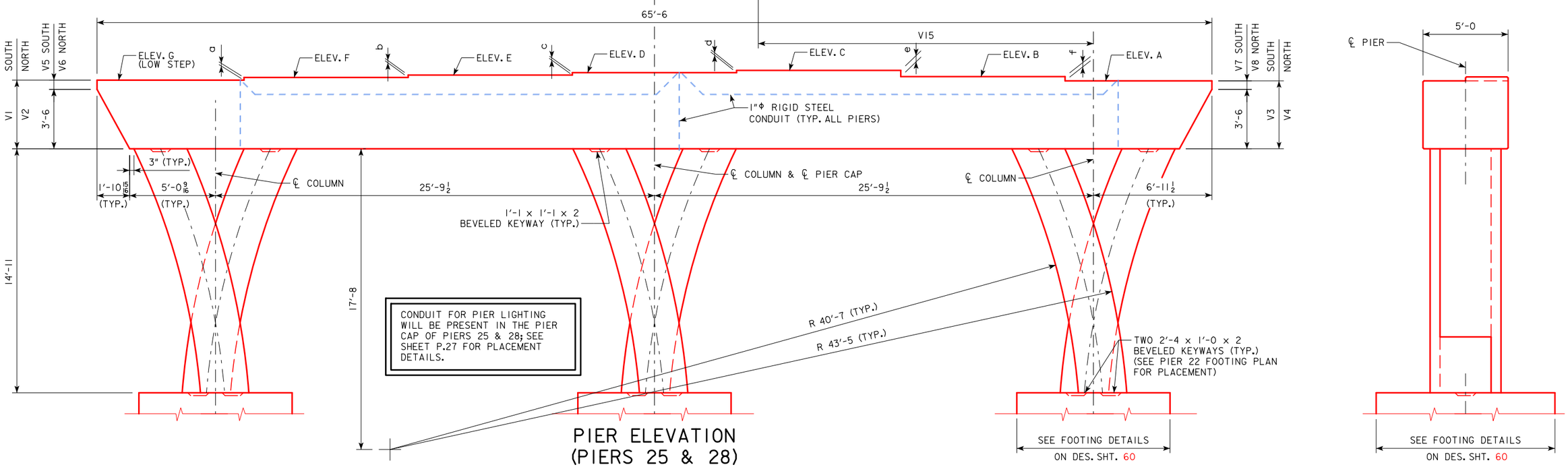

PIER ELEVATION
(PIERS 25 & 28)
(LOOKING UPSTATION)

PIER END VIEW

PIER DIMENSIONS - PIERS 25 & 28

PIER NO.	V1	V2	V3	V4	V5	V6	V7	V8	V9	V10	V11	V12	V13	V14	V15	V16	V17	V18
25	4'-2 5/8	4'-0	4'-4 13/16	4'-2 3/16	8 5/8	6	10 13/16	8 3/16	4'-0 7/8	9'-7 3/4	3'-6 5/8	6'-1 1/8	12'-2 1/4	14'-5 11/16	19'-8 3/8	1'-5 3/4	1'-0 1/4	2'-5
28	4'-0	4'-3 1/4	4'-2 3/16	4'-5 3/8	6	9 1/4	8 3/16	11 3/8	4'-0 7/8	9'-7 3/4	3'-6 5/8	6'-1 1/8	12'-2 1/4	14'-5 11/16	19'-8 3/8	1'-5 3/4	1'-0 1/4	3'-3 15/16

NOTES:
SEE DESIGN SHEET 20 FOR PIER NOTES.
SEE DESIGN SHEET 55 FOR PIER CAP ELEVATIONS & STEP HEIGHTS.
SEE INDIVIDUAL PIER ELEVATIONS ON DESIGN SHEET 48 FOR LOCATIONS OF CROSS SECTIONS ALONG THE COLUMN.
SEE DESIGN SHEET 57 FOR ANCHOR BOLT LAYOUT.
SEE DESIGN SHEET 60 FOR COLUMN KEYWAY DETAILS.
SEE DESIGN SHEET 32 FOR PIER CAP KEYWAY DETAILS.

whks
engineers + planners + land surveyors

DESIGN FOR VARIABLE SKEW (L.A.)
2271'-6 x VARI. CONTINUOUS WELDED GIRDER BRIDGE-EBL W/14' BIKE TRAIL
138'-10 & 151'-0 7/8 END SPANS MULTIPLE LENGTH INTERIOR SPANS
PIERS 25 & 28 DETAILS
STA. 6792+60.93 - 52' LEFT ℄ I-74 OCTOBER, 2015
SCOTT COUNTY
IOWA DEPARTMENT OF TRANSPORTATION - HIGHWAY DIVISION
DESIGN SHEET NO. 46 OF 282 FILE NO. 30253 DESIGN NO. 3408

DESIGN TEAM RE / TA / JS | SCOTT COUNTY | PROJECT NUMBER BRFIM-074-1(200)5--05-82 | SHEET NUMBER 47

BENCH MARK NO. 500: STA. 6781+18.92 LT. 161.19'
ELEV. 575.797, CHISELED "X" IN BOLT E. SIDE
CONCRETE STRUCTURE

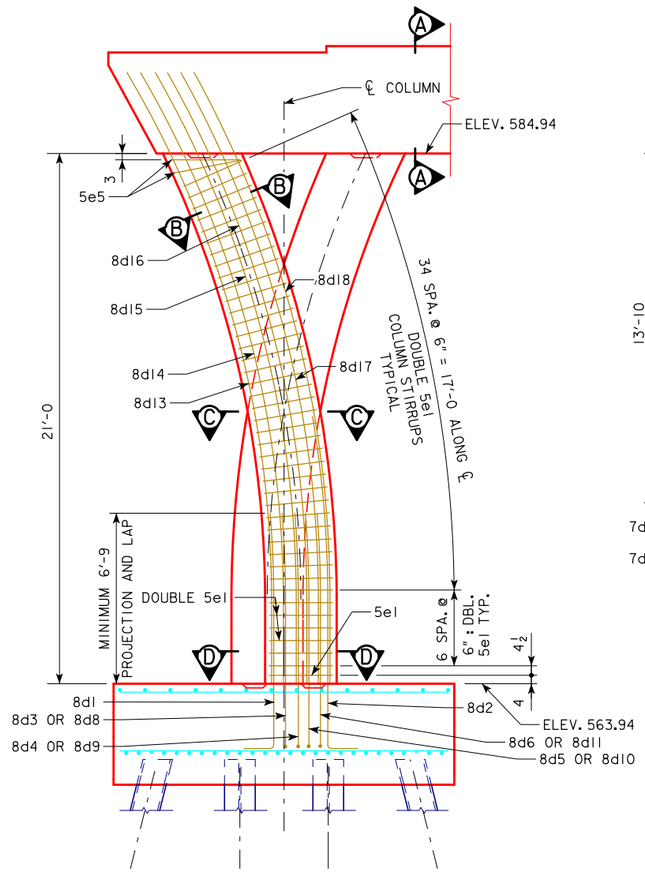

PIER 22 ELEVATION

SEE DESIGN SHEET 58 FOR PILE LAYOUT.

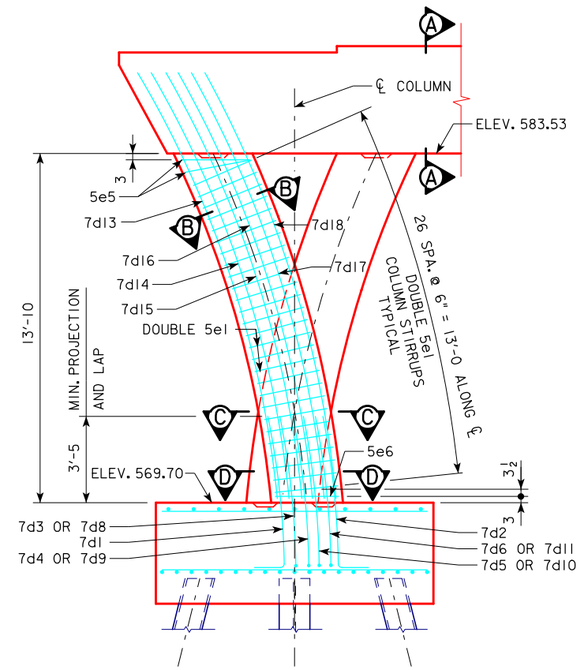

PIER 23 ELEVATION

SEE DESIGN SHEET 58 FOR PILE LAYOUT.

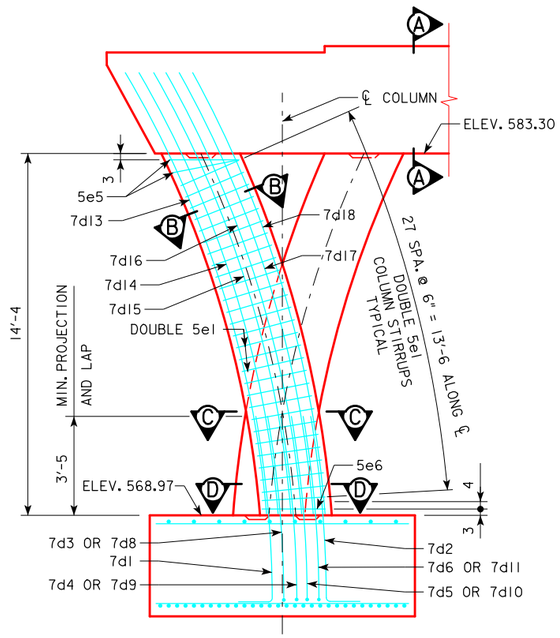

PIER 24 ELEVATION

NOTES:
FOR PIERS 22-24, SECTION D-D IS LOCATED AT THE TOP OF THE FOOTING.

COLUMN REINFORCEMENT SHOWN IS TYPICAL FOR EACH COLUMN ARM.

NOTES:
ALL ELEVATION VIEWS LOOKING UPSTATION.

SEE DESIGN SHEET 51 FOR SECTION A-A.

SEE DESIGN SHEET 50 FOR SECTIONS B-B & C-C.

SEE DESIGN SHEET 49 FOR SECTION D-D.

SEE DESIGN SHEET 60 FOR FOOTING TYPE, SIZE AND DETAILS.

whks
engineers + planners + land surveyors

DESIGN FOR VARIABLE SKEW (L.A.)

2271'-6 x VARI. CONTINUOUS WELDED GIRDER BRIDGE-EBL W/14' BIKE TRAIL

138'-10 & 151'-0 7/8 END SPANS MULTIPLE LENGTH INTERIOR SPANS

PIER COLUMN DETAILS

STA. 6792+60.93 - 52' LEFT ℄ I-74 OCTOBER, 2015

SCOTT COUNTY

IOWA DEPARTMENT OF TRANSPORTATION - HIGHWAY DIVISION

DESIGN SHEET NO. 47 OF 282 FILE NO. 30253 DESIGN NO. 3408

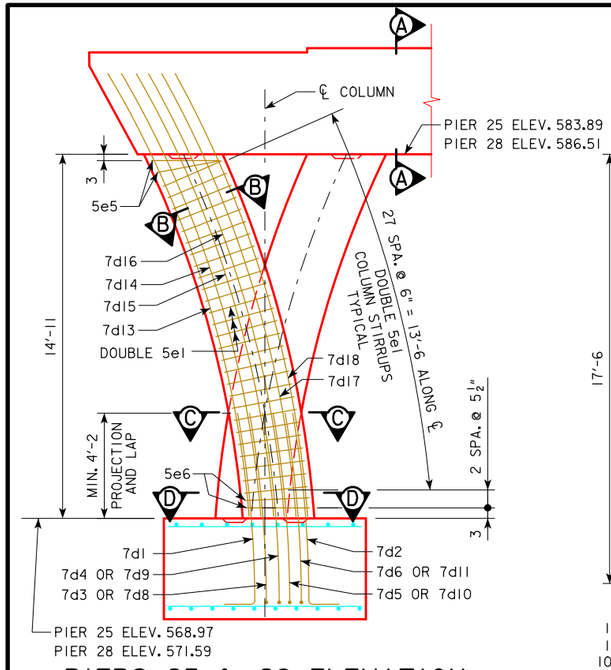

PIERS 25 & 28 ELEVATION

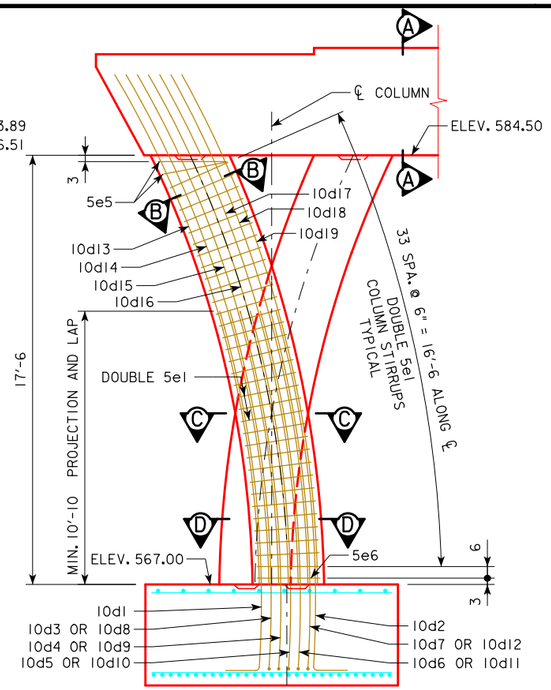

PIER 26 ELEVATION

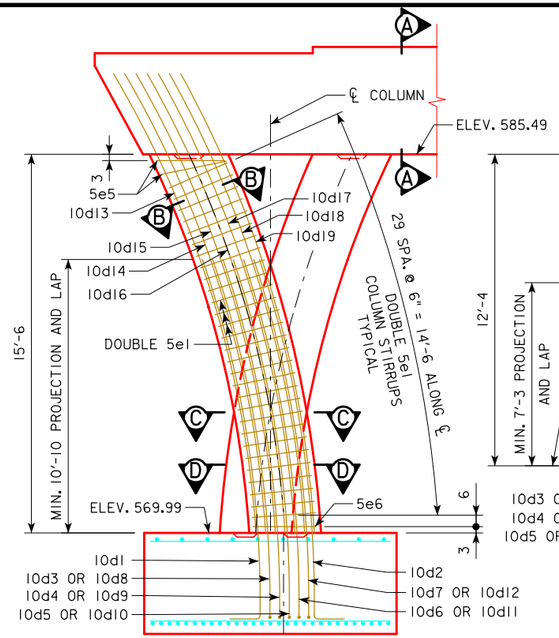

PIER 27 ELEVATION

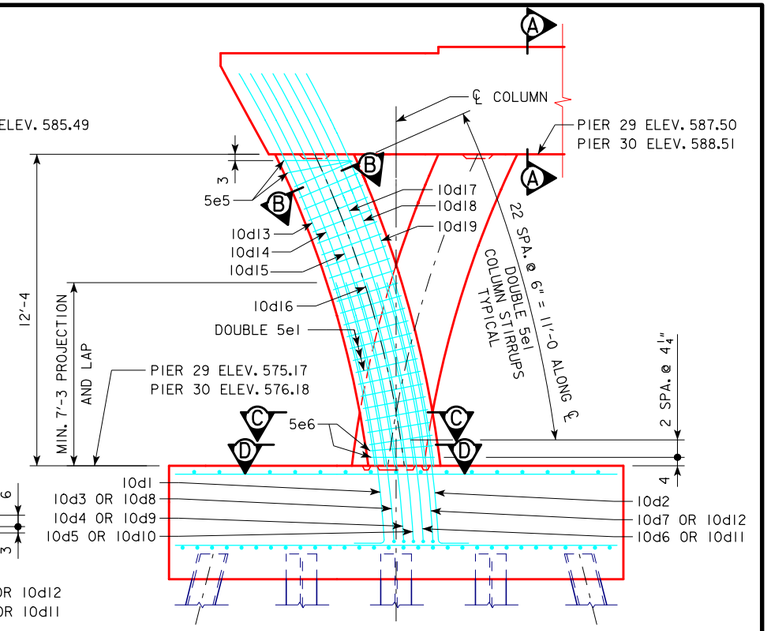

PIERS 29 & 30 ELEVATION

SEE DESIGN SHEET 59 FOR PILE LAYOUT.

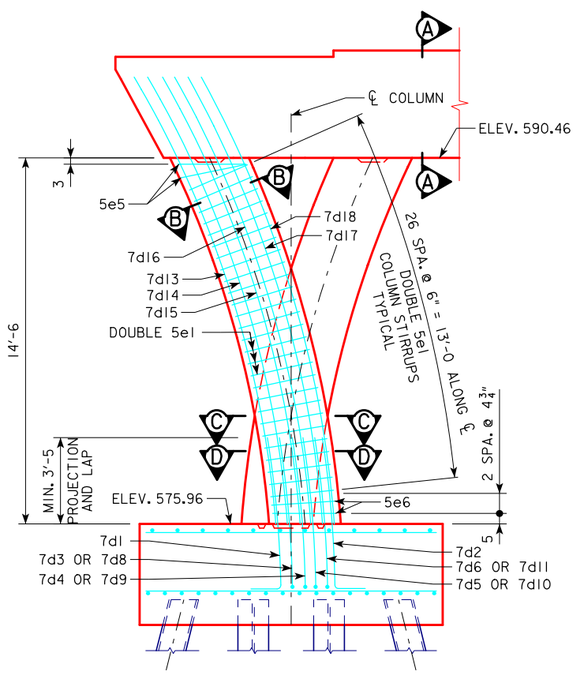

PIER 31 ELEVATION

SEE DESIGN SHEET 59 FOR PILE LAYOUT.

BENCH MARK NO. 500: STA. 6781+18.92 LT. 161.19'
ELEV. 575.797, CHISELED "X" IN BOLT E. SIDE
CONCRETE STRUCTURE

NOTE:
SECTION D-D IS LOCATED AT THE TOP OF THE FOOTING.

COLUMN REINFORCING SHOWN IS TYPICAL FOR EACH COLUMN ARM.

NOTES:
ALL ELEVATION VIEWS LOOKING UPSTATION.

SEE DESIGN SHEET 51 FOR SECTION A-A.

SEE DESIGN SHEET 50 FOR SECTIONS B-B & C-C.

SEE DESIGN SHEET 49 FOR SECTION D-D.

SEE DESIGN SHEET 60 FOR FOOTING TYPE, SIZE AND DETAILS.

whks
engineers + planners + land surveyors

DESIGN FOR VARIABLE SKEW (L.A.)

2271'-6 x VARI. CONTINUOUS WELDED GIRDER BRIDGE-EBL W/14' BIKE TRAIL

138'-10 & 151'-0⅞ END SPANS MULTIPLE LENGTH INTERIOR SPANS

PIER COLUMN DETAILS

STA. 6792+60.93 - 52' LEFT ℄ I-74 OCTOBER, 2015

SCOTT COUNTY

IOWA DEPARTMENT OF TRANSPORTATION - HIGHWAY DIVISION

DESIGN SHEET NO. 48 OF 282 FILE NO. 30253 DESIGN NO. 3408

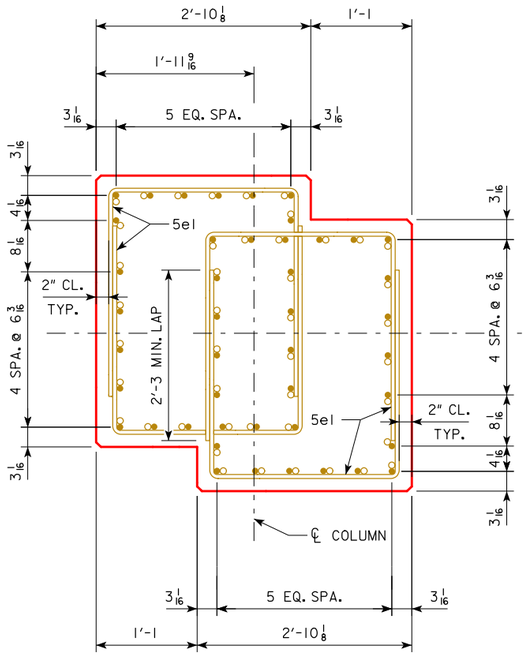

SECTION D-D
PIERS 25, 28
BAR DESIGNATIONS SIMILAR TO PIER 22

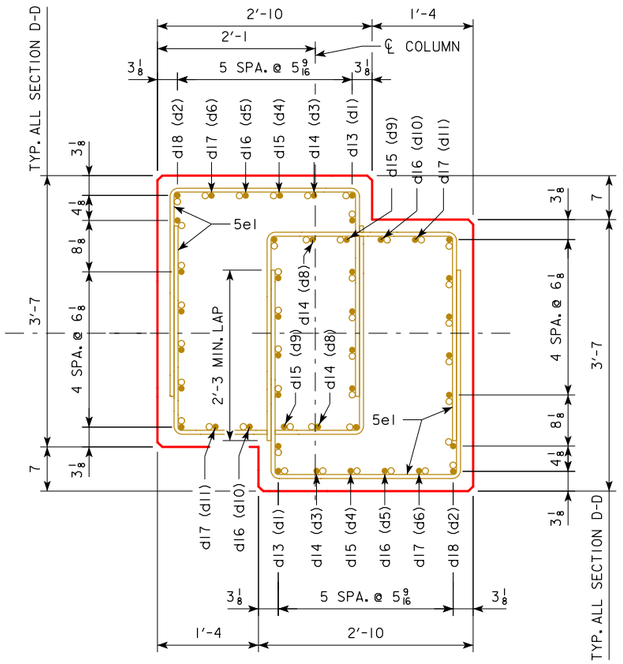

SECTION D-D
PIER 22

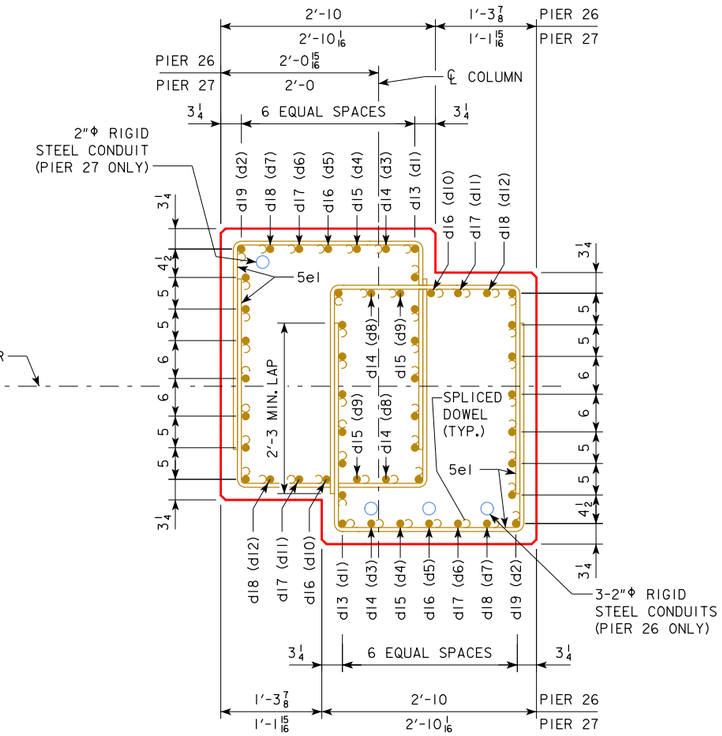

SECTION D-D
PIERS 26 & 27

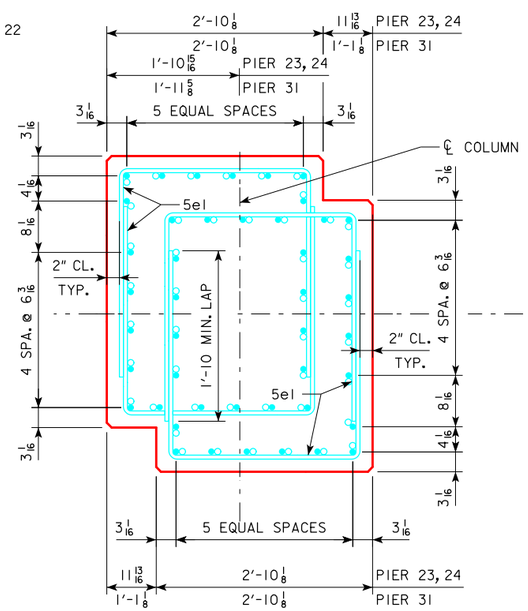

SECTION D-D
PIERS 23, 24, & 31
BAR DESIGNATIONS SIMILAR TO PIER 22

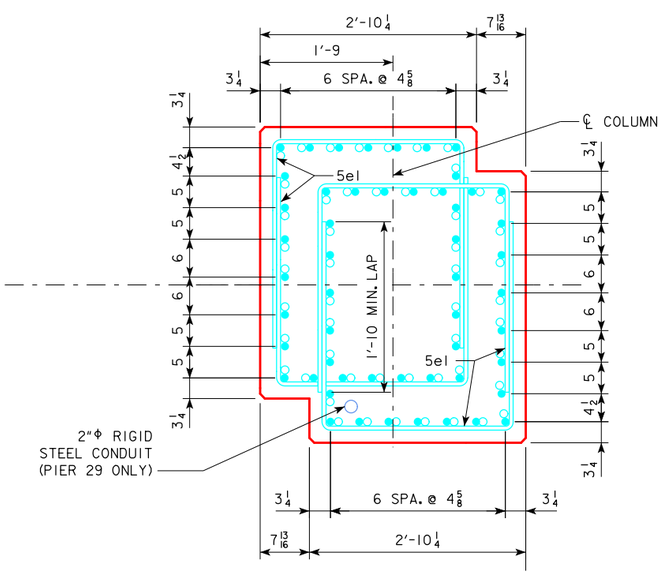

SECTION D-D
PIERS 29 & 30
BAR DESIGNATIONS SIMILAR TO PIERS 26 & 27

NOTE:

SECTION D-D IS LOCATED IN A COLUMN REGION WITH NO CURVATURE FOR PIER 22. FOR PIERS 23-31, WHERE THE ENTIRE COLUMN IS CURVED, SECTION D-D IS LOCATED AT THE TOP OF THE FOOTING.

SEE DESIGN SHEETS 47 & 48 FOR LOCATION OF SECTION D-D.

SPLICED FOOTING DOWEL DESIGNATIONS SHOWN IN PARENTHESES.

whks
engineers + planners + land surveyors

DESIGN FOR VARIABLE SKEW (L.A.)

2271'-6 x VARI. CONTINUOUS WELDED GIRDER BRIDGE-EBL W/14' BIKE TRAIL

138'-10 & 151'-0 7/8 END SPANS MULTIPLE LENGTH INTERIOR SPANS

PIER COLUMN DETAILS

STA. 6792+60.93 - 52' LEFT ℄ I-74 OCTOBER, 2015

SCOTT COUNTY

IOWA DEPARTMENT OF TRANSPORTATION - HIGHWAY DIVISION

DESIGN SHEET NO. 49 OF 282 FILE NO. 30253 DESIGN NO. 3408

DESIGN TEAM RE / TA / JS	SCOTT COUNTY	PROJECT NUMBER BRFIM-074-1(200)5--05-82	SHEET NUMBER 50

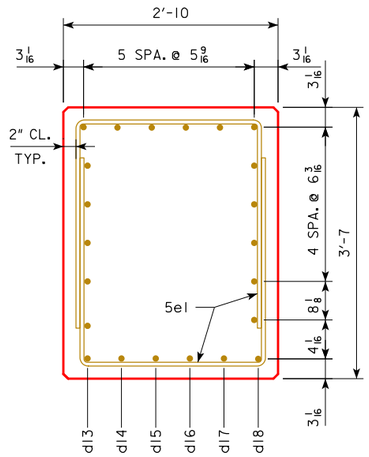

SECTION B-B
PIERS 23, 24, 25, 28, 31

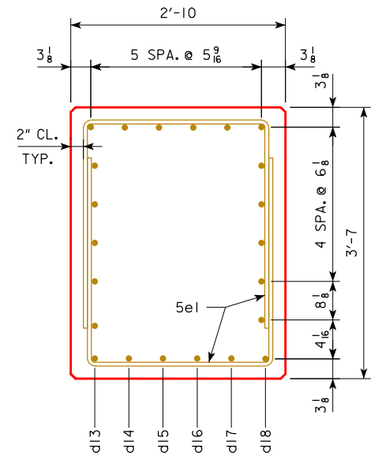

SECTION B-B
PIER 22

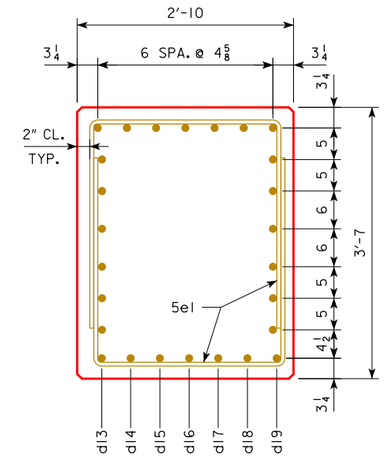

SECTION B-B
PIERS 26, 27, 29, 30

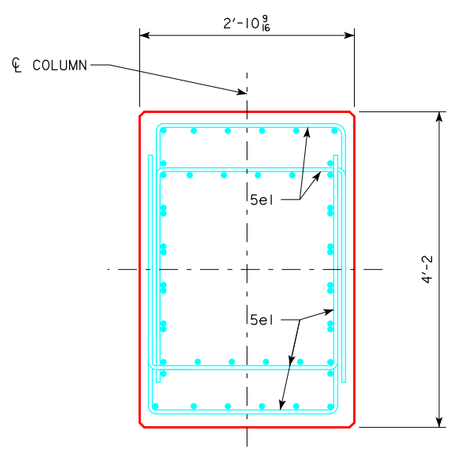

SECTION C-C
PIERS 22-25, 28, 31

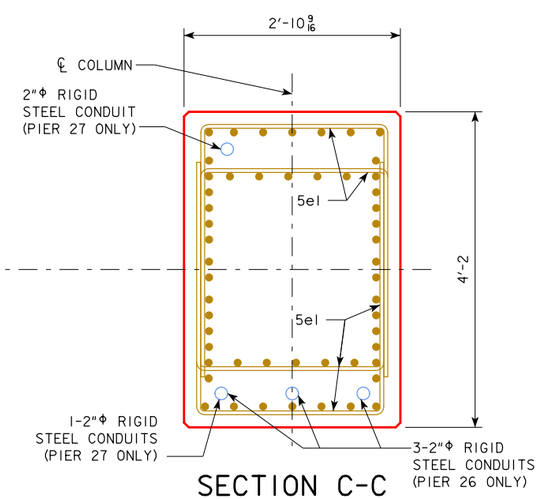

SECTION C-C
PIERS 26, 27, 29, 30

NOTES:
FOOTING DOWELS NOT SHOWN.

SEE DESIGN SHEETS 47 & 48 FOR LOCATION OF SECTIONS B-B & C-C.

DESIGN FOR VARIABLE SKEW (L.A.)

2271'-6 x VARI. CONTINUOUS WELDED GIRDER BRIDGE-EBL W/14' BIKE TRAIL

138'-10 & 151'-0 7/8 END SPANS MULTIPLE LENGTH INTERIOR SPANS

PIER COLUMN DETAILS

STA. 6792+60.93 - 52' LEFT ℄ I-74 OCTOBER, 2015

SCOTT COUNTY

IOWA DEPARTMENT OF TRANSPORTATION - HIGHWAY DIVISION

DESIGN SHEET NO. 50 OF 282 FILE NO. 30253 DESIGN NO. 3408

whks
engineers + planners + land surveyors

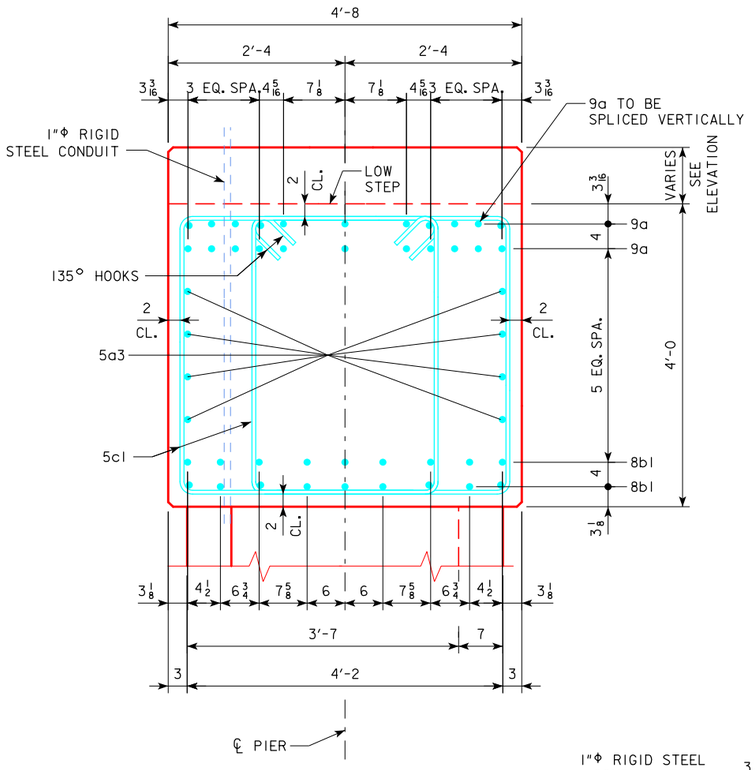

SECTION A-A
PIERS 22-24, 31

PIER 22 REINFORCING BARS ARE EPOXY COATED.

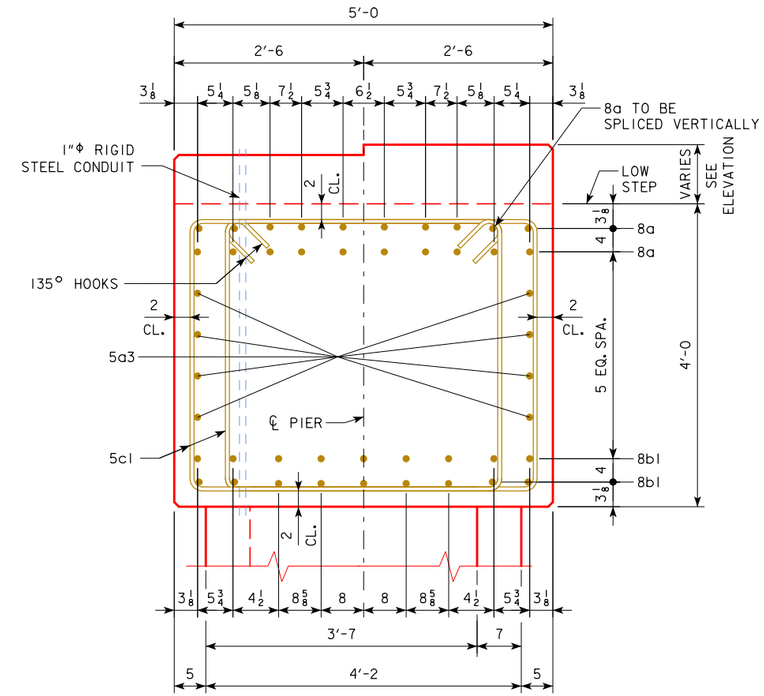

SECTION A-A
PIERS 25 & 28

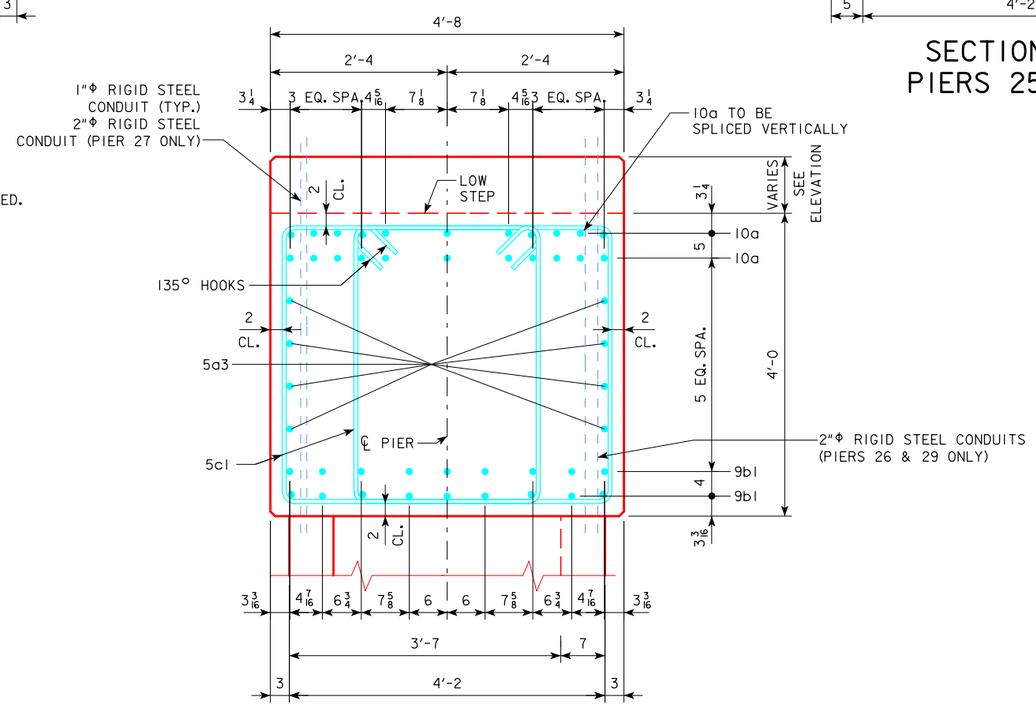

SECTION A-A
PIERS 26, 27, 29 & 30

PIERS 26 & 27 REINFORCING BARS ARE EPOXY COATED.

NOTES:
SEE DESIGN SHEET 20 FOR PIER NOTES.
SEE DESIGN SHEETS 61-64 FOR BENT BAR DETAILS.
SEE DESIGN SHEET 54 FOR STEP REINFORCEMENT DETAILS.
SEE DESIGN SHEETS 47 & 48 FOR LOCATION OF SECTION A-A.

whks
engineers + planners + land surveyors

DESIGN FOR VARIABLE SKEW (L.A.)

2271'-6 x VARI. CONTINUOUS WELDED GIRDER BRIDGE-EBL W/14' BIKE TRAIL

138'-10 & 151'-0 7/8 END SPANS MULTIPLE LENGTH INTERIOR SPANS

PIER CAP DETAILS

STA. 6792+60.93 - 52' LEFT ℄ I-74 OCTOBER, 2015

SCOTT COUNTY

IOWA DEPARTMENT OF TRANSPORTATION - HIGHWAY DIVISION

DESIGN SHEET NO. 51 OF 282 FILE NO. 30253 DESIGN NO. 3408

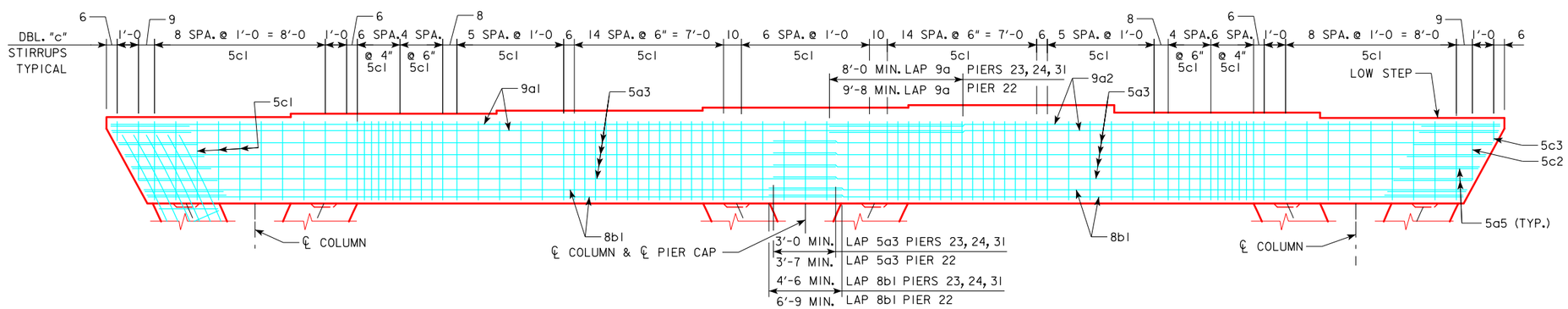

PIER 22, 23, 24, & 31 CAP ELEVATION

(LOOKING UPSTATION)

PIER 22 REINFORCING BARS ARE EPOXY COATED.

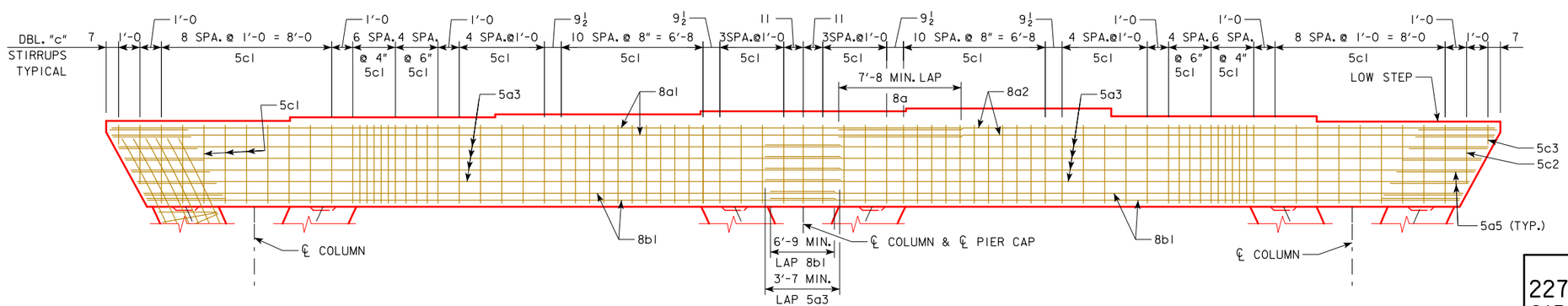

PIERS 25 & 28 CAP ELEVATION

(LOOKING UPSTATION)

whks
engineers + planners + land surveyors

(SEE DESIGN SHEET 54 FOR ADDITIONAL STEP REINFORCING)

DESIGN FOR VARIABLE SKEW (L.A.)

2271'-6 x VARI. CONTINUOUS WELDED GIRDER BRIDGE-EBL W/14' BIKE TRAIL

138'-10 & 151'-0⅞ END SPANS MULTIPLE LENGTH INTERIOR SPANS

PIER CAP DETAILS

STA. 6792+60.93 - 52' LEFT ℄ I-74 OCTOBER, 2015

SCOTT COUNTY

IOWA DEPARTMENT OF TRANSPORTATION - HIGHWAY DIVISION

DESIGN SHEET NO. 52 OF 282 FILE NO. 30253 DESIGN NO. 3408

DESIGN TEAM RE / TA / JS	SCOTT COUNTY	PROJECT NUMBER BRFIM-074-1(200)5--05-82	SHEET NUMBER 53

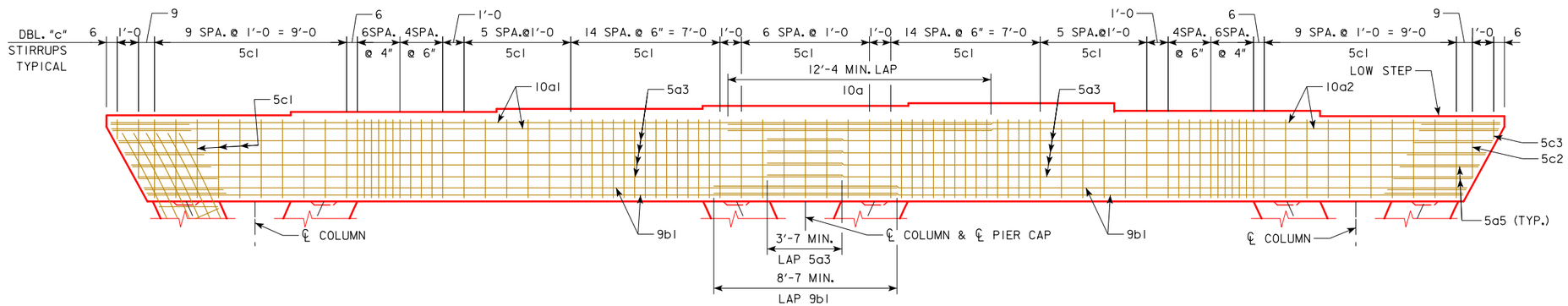

PIERS 26 & 27 CAP ELEVATION

(LOOKING UPSTATION)

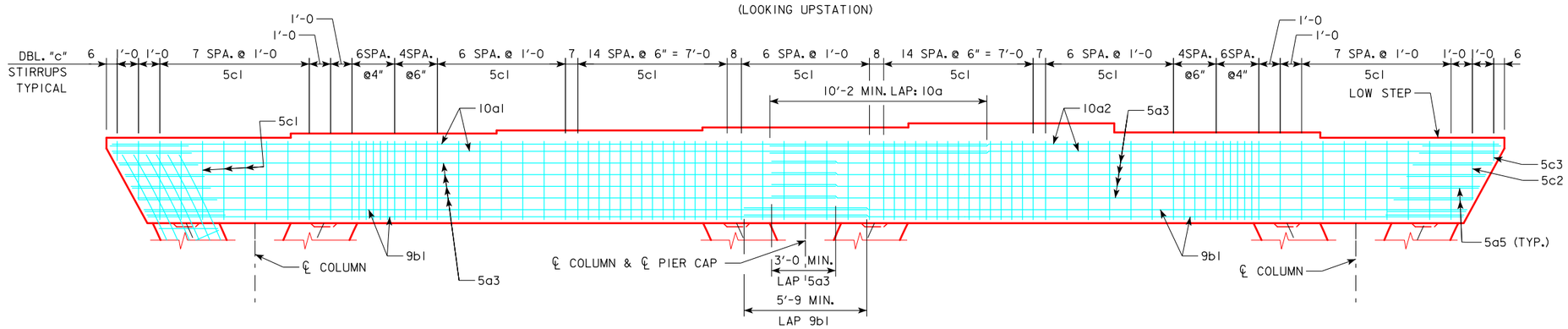

PIERS 29 & 30 CAP ELEVATION

(LOOKING UPSTATION)

(SEE DESIGN SHEET 54 FOR ADDITIONAL STEP REINFORCING)

whks
engineers + planners + land surveyors

DESIGN FOR VARIABLE SKEW (L.A.)

2271'-6 x VARI. CONTINUOUS WELDED GIRDER BRIDGE-EBL W/14' BIKE TRAIL

138'-10 & 151'-0⅞ END SPANS MULTIPLE LENGTH INTERIOR SPANS

PIER CAP DETAILS

STA. 6792+60.93 - 52' LEFT ℄ I-74 OCTOBER, 2015

SCOTT COUNTY

IOWA DEPARTMENT OF TRANSPORTATION - HIGHWAY DIVISION

DESIGN SHEET NO. 53 OF 282 FILE NO. 30253 DESIGN NO. 3408

DESIGN TEAM RE / TA / JS	SCOTT COUNTY	PROJECT NUMBER BRFIM-074-1(200)5--05-82	SHEET NUMBER 54

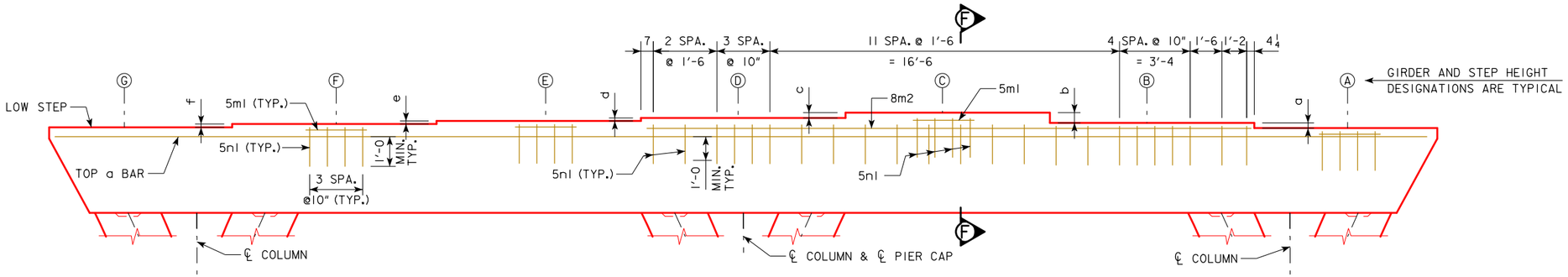

PIER 22 STEP ELEVATION

(LOOKING UPSTATION)

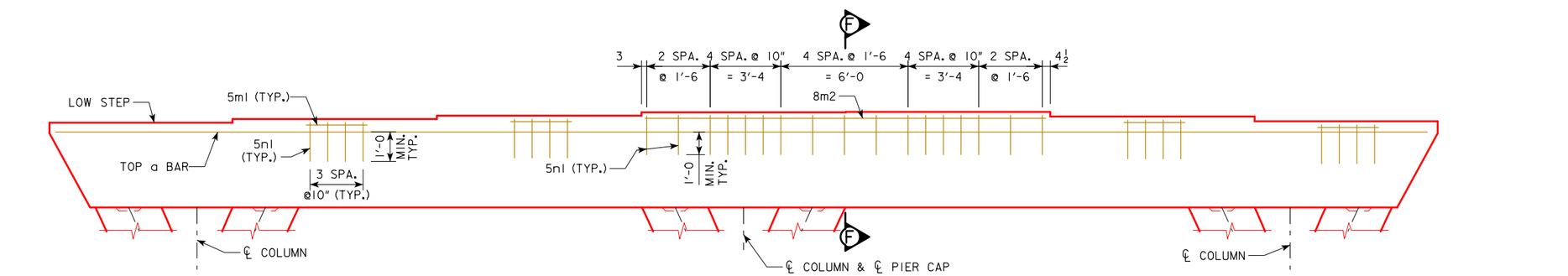

PIERS 23-30 STEP ELEVATION

(LOOKING UPSTATION)

PIERS 25, 26, 27 & 28 REINFORCING BARS ARE EPOXY COATED.

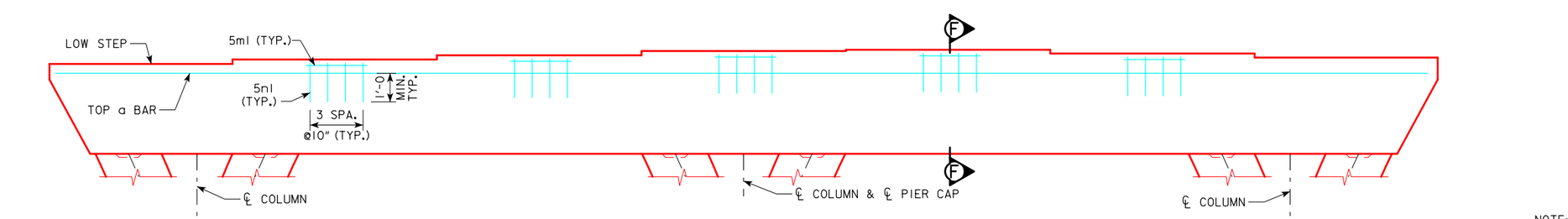

PIER 31 STEP ELEVATION

(LOOKING UPSTATION)

NOTE:
CENTER 5nl & 5ml BARS UNDER BEAM BEARING.

SEE DESIGN SHEET 55 FOR SECTION F-F.

whks
engineers + planners + land surveyors

DESIGN FOR VARIABLE SKEW (L.A.)

2271'-6 x VARI. CONTINUOUS WELDED GIRDER BRIDGE-EBL W/14' BIKE TRAIL

138'-10 & 151'-0 7/8 END SPANS MULTIPLE LENGTH INTERIOR SPANS

PIER STEP DETAILS

STA. 6792+60.93 - 52' LEFT ℄ I-74 OCTOBER, 2015

SCOTT COUNTY

IOWA DEPARTMENT OF TRANSPORTATION - HIGHWAY DIVISION

DESIGN SHEET NO. 54 OF 282 FILE NO. 30253 DESIGN NO. 3408

BENCH MARK NO. 500: STA. 6781+18.92 LT. 161.19'
ELEV. 575.797, CHISELED "X" IN BOLT E. SIDE
CONCRETE STRUCTURE

PIER STEP INFORMATION - PIERS 22 - 31

GIRDER	STEP	PIER 22		PIER 23		PIER 24		PIER 25 UNIT 2		PIER 25 UNIT 3		PIER 26		PIER 27	
		ELEV.	DIM.	ELEV.	DIM.	ELEV.	DIM.	ELEV.	DIM.	ELEV.	DIM.	ELEV.	DIM.	ELEV.	DIM.
G	a	588.94	2 5/8	587.53	2 3/8	587.30	2 1/4	588.11	2 1/2	587.89	2 3/8	588.50	2 1/4	589.49	2 1/4
F	b	589.16	2 5/8	587.73	2 3/8	587.49	2 1/4	588.32	2 3/16	588.09	2 3/16	588.69	2 3/16	589.68	2 3/16
E	c	589.38	2 1/2	587.93	2 3/8	587.68	2 3/16	588.50	2 3/16	588.27	2 3/16	588.87	2 3/16	589.86	2 3/16
D	d	589.59	15/16	588.13	3/4	587.86	5/8	588.68	1/2	588.45	1/2	589.05	1/2	590.04	1/2
C	e	589.67	1 15/16	588.19	2 3/16	587.91	2 3/8	588.72	2 3/8	588.49	2 3/8	589.09	2 3/8	590.08	2 3/8
B	f	589.51	2 3/16	588.01	2 3/16	587.71	2 3/8	588.52	2 3/4	588.29	2 5/8	588.89	2 1/2	589.88	2 1/2
A		589.33	—	587.83	—	587.51	—	588.29	—	588.07	—	588.68	—	589.67	—

GIRDER	STEP	PIER 28 UNIT 3		PIER 28 UNIT 4		PIER 29		PIER 30		PIER 31	
		ELEV.	DIM.	ELEV.	DIM.	ELEV.	DIM.	ELEV.	DIM.	ELEV.	DIM.
G	a	590.51	2 1/2	590.78	2 1/4	591.50	2 1/4	592.51	2 1/16	594.46	1 15/16
F	b	590.72	2 3/16	590.97	2 3/16	591.69	2 3/16	592.68	2 3/16	594.62	1 13/16
E	c	590.90	2 3/16	591.15	2 3/16	591.87	2 3/16	592.86	2 1/16	594.77	1 15/16
D	d	591.08	1/2	591.33	1/2	592.05	3/8	593.03	1/2	594.93	1/8
C	e	591.12	2 3/8	591.37	2 3/8	592.08	2 3/8	593.07	2 1/2	594.94	2 3/4
B	f	590.92	2 3/4	591.17	2 1/2	591.88	2 1/2	592.86	2 3/8	594.71	2 7/8
A		590.69	—	590.96	—	591.67	—	592.66	—	594.47	—

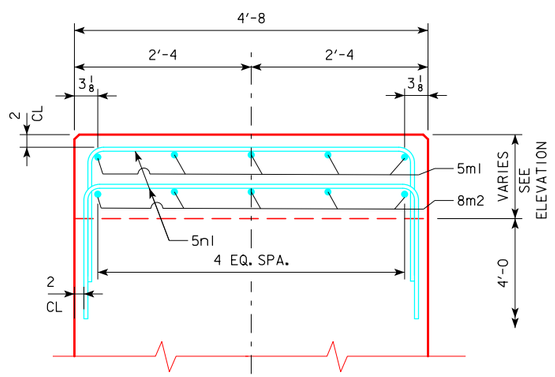

SECTION F-F
PIERS 22-24, 26 & 27, 29-31
(NO 8m2 ON PIER 31)
PIERS 22, 26 & 27 REINFORCING BARS ARE EPOXY COATED.

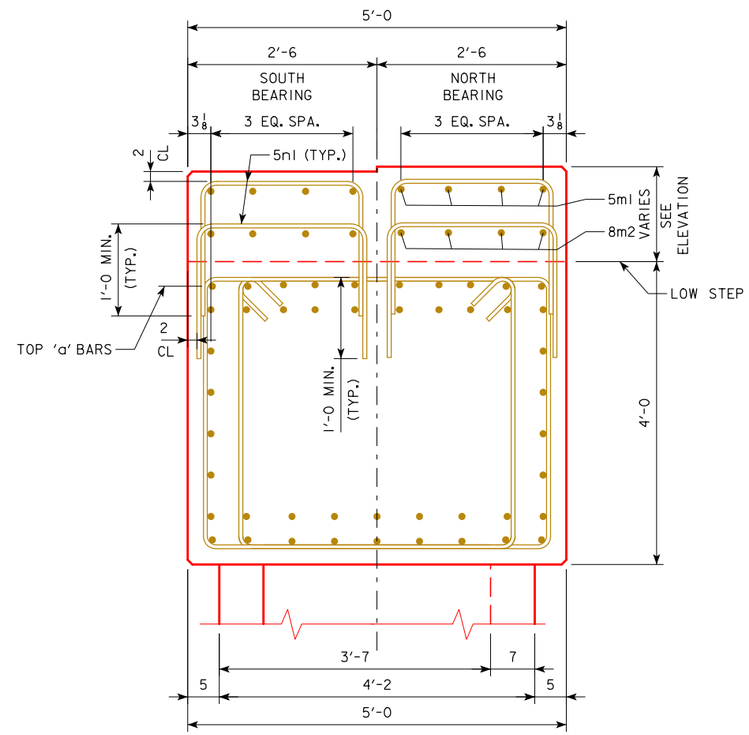

SECTION F-F
PIERS 25 & 28

NOTES:
SEE DESIGN SHEET 20 FOR PIER NOTES.

SEE DESIGN SHEETS 45 & 46 FOR LOCATION OF PIER ELEVATIONS AND DIMENSIONS.

SEE DESIGN SHEET 54 FOR LOCATION OF SECTION F-F.

whks
engineers + planners + land surveyors

DESIGN FOR VARIABLE SKEW (L.A.)
2271'-6 x VARI. CONTINUOUS WELDED GIRDER BRIDGE-EBL W/14' BIKE TRAIL
138'-10 & 151'-0 7/8 END SPANS MULTIPLE LENGTH INTERIOR SPANS
PIER STEP DETAILS
STA. 6792+60.93 - 52' LEFT ℄ I-74 OCTOBER, 2015
SCOTT COUNTY
IOWA DEPARTMENT OF TRANSPORTATION - HIGHWAY DIVISION
DESIGN SHEET NO. 55 OF 282 FILE NO. 30253 DESIGN NO. 3408

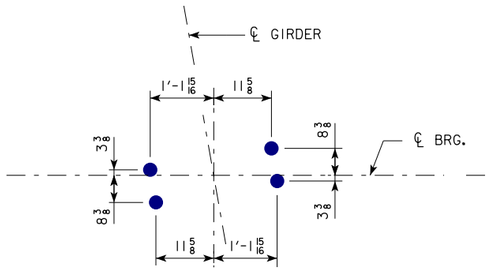

PIER 16 - SOUTH BRG. LINE
GIRDERS A & C

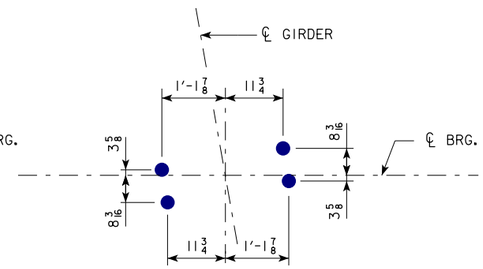

PIER 16 - SOUTH BRG. LINE
GIRDERS D THRU K

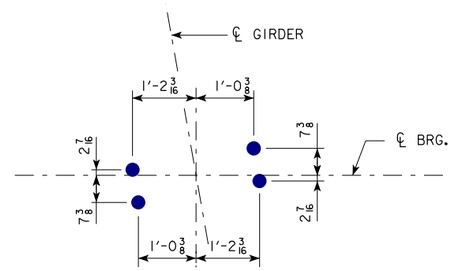

PIER 16 - NORTH BRG. LINE

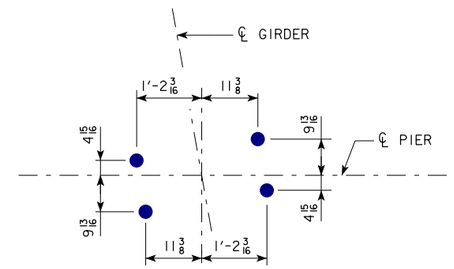

PIER 17

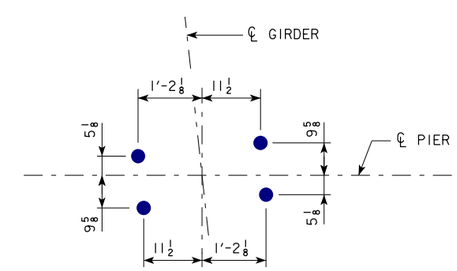

PIER 18

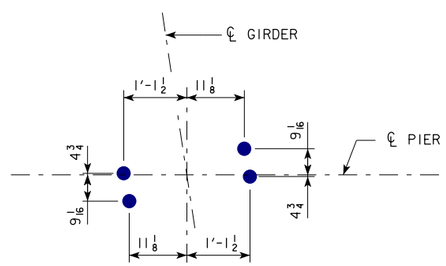

PIER 19

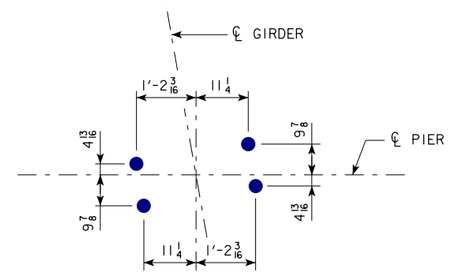

PIER 20

ANCHOR BOLT LAYOUT

DESIGN FOR VARIABLE SKEW (L.A.)

2271'-6 x VARI. CONTINUOUS WELDED GIRDER BRIDGE-EBL W/14' BIKE TRAIL

138'-10 & 151'-0 7/8 END SPANS MULTIPLE LENGTH INTERIOR SPANS

ANCHOR BOLT DTLS. - PIERS 16-20

STA. 6792+60.93 - 52' LEFT ℄ I-74 OCTOBER, 2015

SCOTT COUNTY

IOWA DEPARTMENT OF TRANSPORTATION - HIGHWAY DIVISION

DESIGN SHEET NO. 56 OF 282 FILE NO. 30253 DESIGN NO. 3408

whks engineers + planners + land surveyors

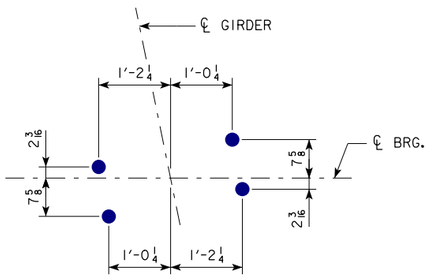

PIER 21 - SOUTH BRG. LINE

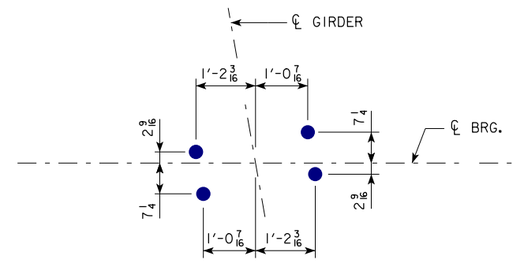

PIER 21 - NORTH BRG. LINE

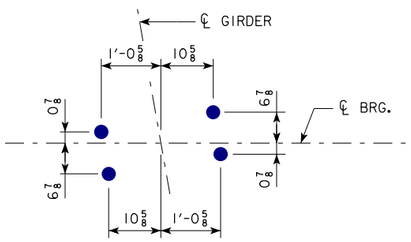

RAMP C-NORTH BRG. LINE

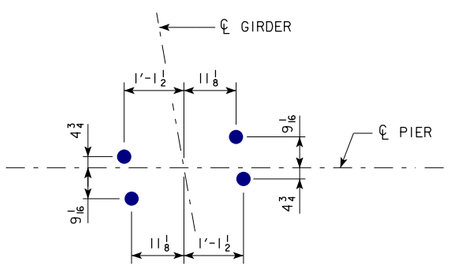

PIERS 22 & 23

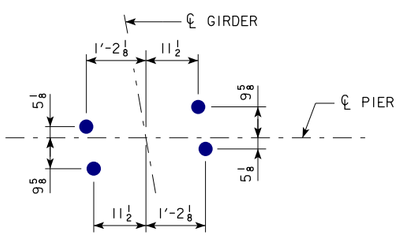

PIER 24

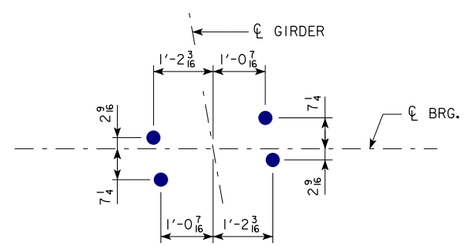

PIER 25 - NORTH & SOUTH BRG. LINE

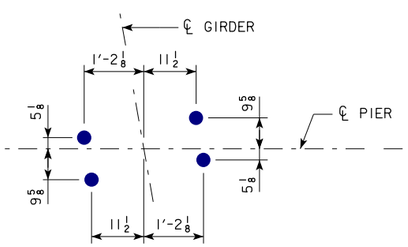

PIERS 26 & 27

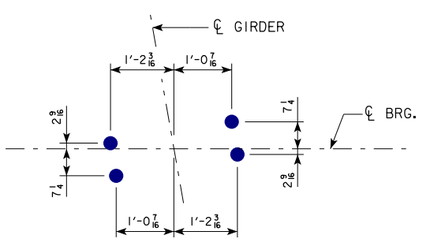

PIER 28 - NORTH & SOUTH BRG. LINE

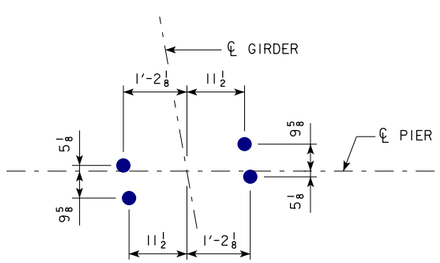

PIER 29

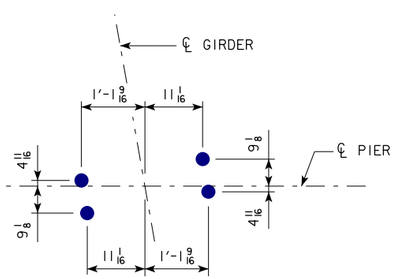

PIER 30

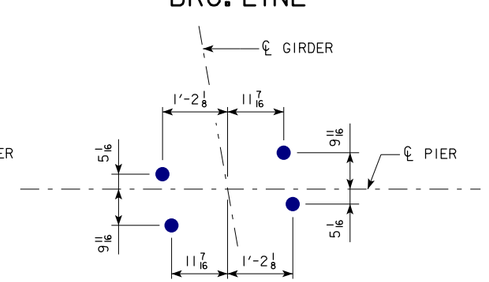

PIER 31

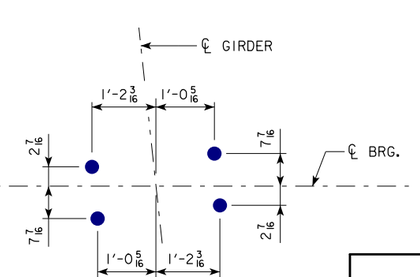

ABUTMENT 32

ANCHOR BOLT LAYOUT

whks
engineers + planners + land surveyors

DESIGN FOR VARIABLE SKEW (L.A.)

2271'-6 x VARI. CONTINUOUS WELDED GIRDER BRIDGE-EBL W/14' BIKE TRAIL

138'-10 & 151'-0 7/8 END SPANS MULTIPLE LENGTH INTERIOR SPANS

ANCHOR BOLT DTLS. - PIERS 21-32

STA. 6792+60.93 - 52' LEFT ℄ I-74 OCTOBER, 2015

SCOTT COUNTY

IOWA DEPARTMENT OF TRANSPORTATION - HIGHWAY DIVISION

DESIGN SHEET NO. 57 OF 282 FILE NO. 30253 DESIGN NO. 3408

DESIGN TEAM RE / TA / JZ	SCOTT COUNTY	PROJECT NUMBER BRFIM-074-1(200)5--05-82	SHEET NUMBER 58

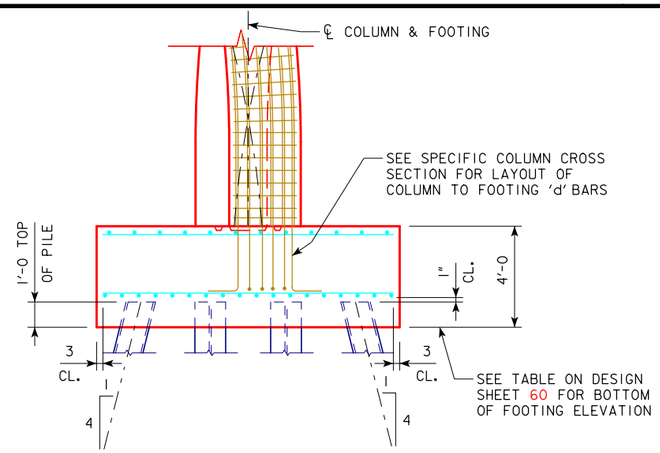

FOOTING ELEVATION PIER 22

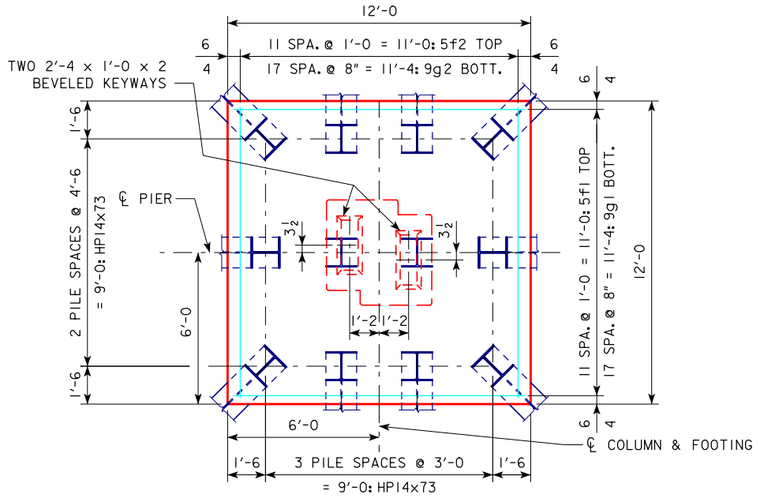

FOOTING PLAN PIER 22

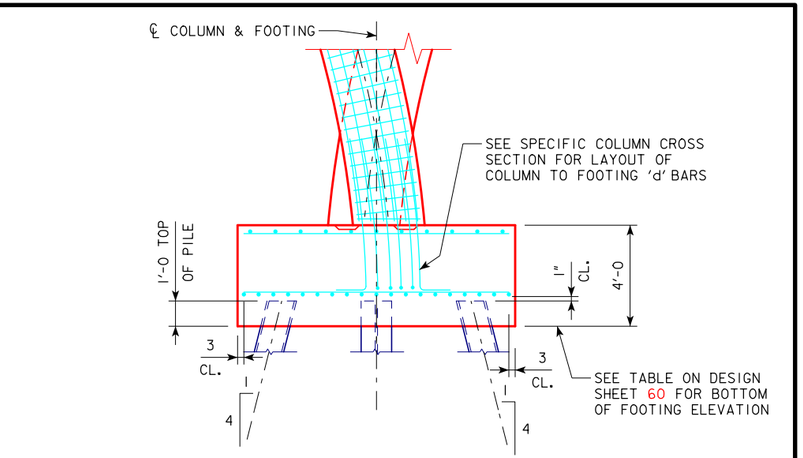

FOOTING ELEVATION PIER 23

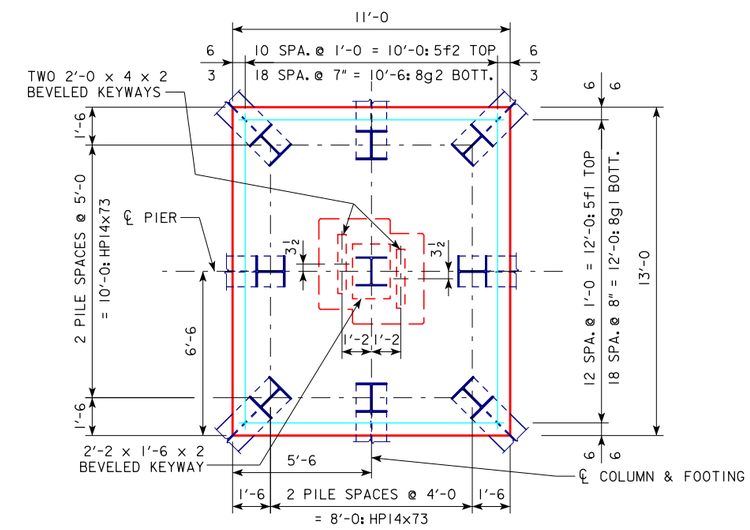

FOOTING PLAN PIER 23

THE CONTRACT LENGTH OF 15 FEET FOR THE PIER 22 PILES IS BASED ON A TOTAL FACTORED AXIAL LOAD PER PILE (PU) OF 238 KIPS, AND A GEOTECHNICAL RESISTANCE FACTOR (PHI) OF 0.7 FOR ROCK END BEARING. PILES ALSO WERE DESIGNED FOR A FACTORED TENSION FORCE OF 26 KIPS.

THE NOMINAL AXIAL BEARING RESISTANCE FOR CONSTRUCTION CONTROL WAS DETERMINED FROM A GEOTECHNICAL RESISTANCE FACTOR (PHI) OF 0.7 FOR ROCK END BEARING. PILES ARE ASSUMED TO BE DRIVEN FROM A START ELEVATION AT THE BOTTOM OF CORING-SEE GENERAL NOTES.

THE REQUIRED NOMINAL AXIAL BEARING RESISTANCE FOR PIER 22 PILES IS 170 TONS AT END OF DRIVE. THE PILE CONTRACT LENGTH SHALL BE DRIVEN AS PER PLAN UNLESS PILES REACH REFUSAL. IN NO CASE SHALL A PILE BE CORED AND GROUTED LESS THAN 1 FOOT INTO SOUND BEDROCK. CONSTRUCTION CONTROL REQUIRES A WEAP ANALYSIS WITH BEARING GRAPH.

THE CONTRACT LENGTH OF 20 FEET FOR THE PIER 23 PILES IS BASED ON A MIXED SOIL CLASSIFICATION, A TOTAL FACTORED AXIAL LOAD PER PILE (PU) OF 246 KIPS, AND A GEOTECHNICAL RESISTANCE FACTOR (PHI) OF 0.65 FOR SOIL AND 0.7 FOR ROCK END BEARING. PILES ALSO WERE DESIGNED FOR A FACTORED TENSION FORCE OF 2 KIPS.

THE NOMINAL AXIAL BEARING RESISTANCE FOR CONSTRUCTION CONTROL WAS DETERMINED FROM A MIXED SOIL CLASSIFICATION AND A GEOTECHNICAL RESISTANCE FACTOR (PHI) OF 0.65 FOR SOIL AND 0.7 FOR ROCK END BEARING. PILES ARE ASSUMED TO BE DRIVEN FROM A START ELEVATION AT THE BOTTOM OF FOOTING.

THE REQUIRED NOMINAL AXIAL BEARING RESISTANCE FOR PIER 23 PILES IS 176 TONS AT END OF DRIVE OR RETAP. THE PILE CONTRACT LENGTH SHALL BE DRIVEN AS PER PLAN UNLESS PILES REACH REFUSAL. IN NO CASE SHALL A PILE BE EMBEDDED LESS THAN 10 FEET. CONSTRUCTION CONTROL REQUIRES A WEAP ANALYSIS WITH BEARING GRAPH.

NOTE:

36-HP14x73 STEEL BEARING PILES (15' LONG) REQUIRED AT PIER 22.
27-HP14x73 STEEL BEARING PILES (20' LONG) REQUIRED AT PIER 23.

PILE DIMENSIONS SHOWN ARE AT BOTTOM OF FOOTING.

BATTER PILES 4:1 IN DIRECTION SHOWN. MINIMUM PILE LENGTH SHALL BE 10'-0. SEE GENERAL NOTES.

TEST PILES RECOMMENDED AT PIERS 22, 29, 30 & 31. SEE GENERAL NOTES.

SEE STAKING DIAGRAM ON DESIGN SHEETS 15 -20 FOR PLACEMENT OF EACH FOOTING RELATIVE TO THE BRIDGE CONSTRUCTION BASELINE.

whks
engineers + planners + land surveyors

DESIGN FOR VARIABLE SKEW (L.A.)

2271'-6 x VARI. CONTINUOUS WELDED GIRDER BRIDGE-EBL W/14' BIKE TRAIL

138'-10 & 151'-0 7/8 END SPANS MULTIPLE LENGTH INTERIOR SPANS

PIER FOOTING DETAILS

STA. 6792+60.93 - 52' LEFT ℄ I-74 OCTOBER, 2015

SCOTT COUNTY

IOWA DEPARTMENT OF TRANSPORTATION - HIGHWAY DIVISION

DESIGN SHEET NO. 58 OF 282 FILE NO. 30253 DESIGN NO. 3408

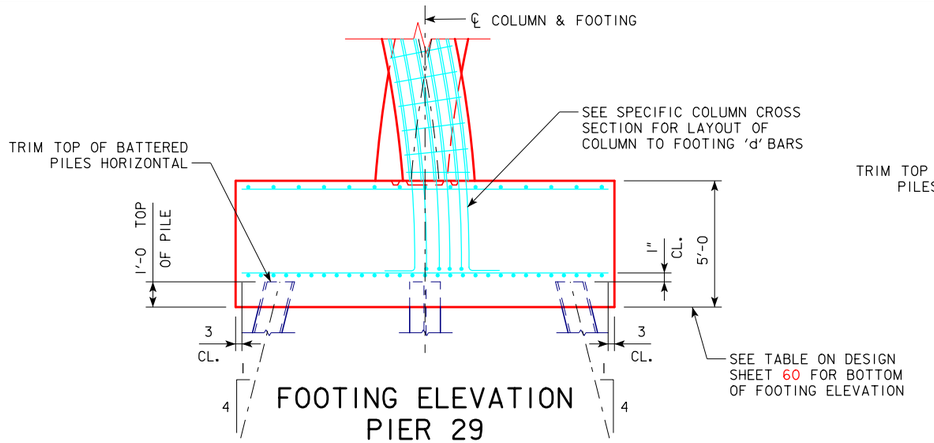

FOOTING ELEVATION PIER 29

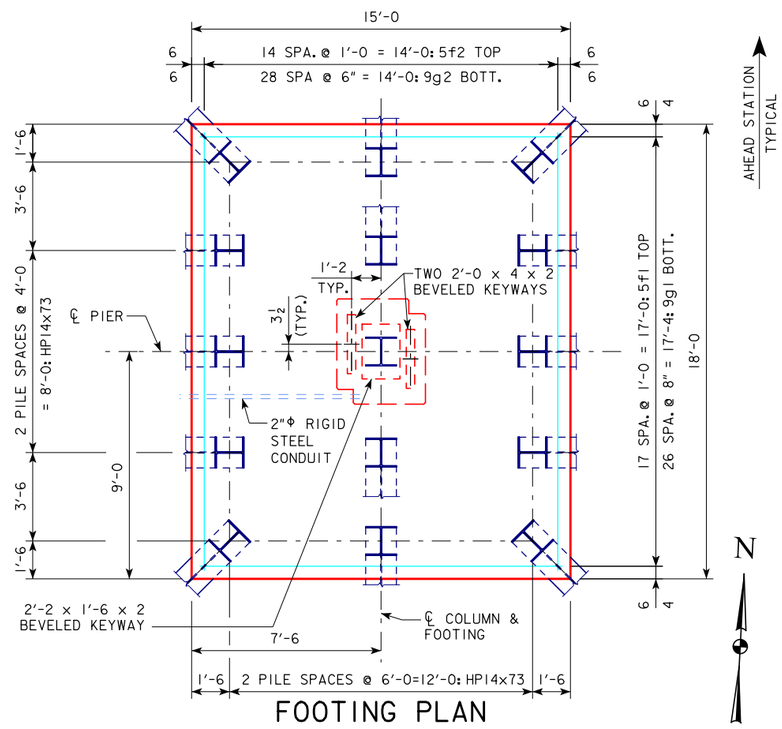

FOOTING PLAN PIER 29

THE CONTRACT LENGTH OF 15 FEET FOR THE PIER 29 PILES IS BASED ON A TOTAL FACTORED AXIAL LOAD PER PILE (PU) OF 201 KIPS, AND A GEOTECHNICAL RESISTANCE FACTOR (PHI) OF 0.7 FOR ROCK END BEARING. PILES ALSO WERE DESIGNED FOR A FACTORED TENSION FORCE OF 5 KIPS.

THE NOMINAL AXIAL BEARING RESISTANCE FOR CONSTRUCTION CONTROL WAS DETERMINED FROM A GEOTECHNICAL RESISTANCE FACTOR (PHI) OF 0.7 FOR ROCK END BEARING. PILES ARE ASSUMED TO BE DRIVEN FROM A START ELEVATION AT THE BOTTOM OF FOOTING (OR BOTTOM OF CORING IF REQUIRED-SEE GENERAL NOTES.)

THE REQUIRED NOMINAL AXIAL BEARING RESISTANCE FOR PIER 29 PILES IS 144 TONS AT END OF DRIVE. THE PILE CONTRACT LENGTH SHALL BE DRIVEN AS PER PLAN UNLESS PILES REACH REFUSAL. IN NO CASE SHALL A PILE BE EMBEDDED LESS THAN 10 FEET. CONSTRUCTION CONTROL REQUIRES A WEAP ANALYSIS WITH BEARING GRAPH.

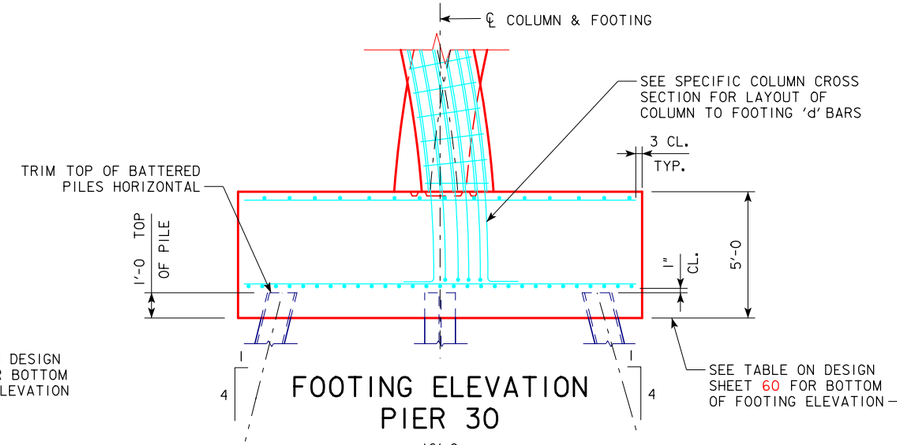

FOOTING ELEVATION PIER 30

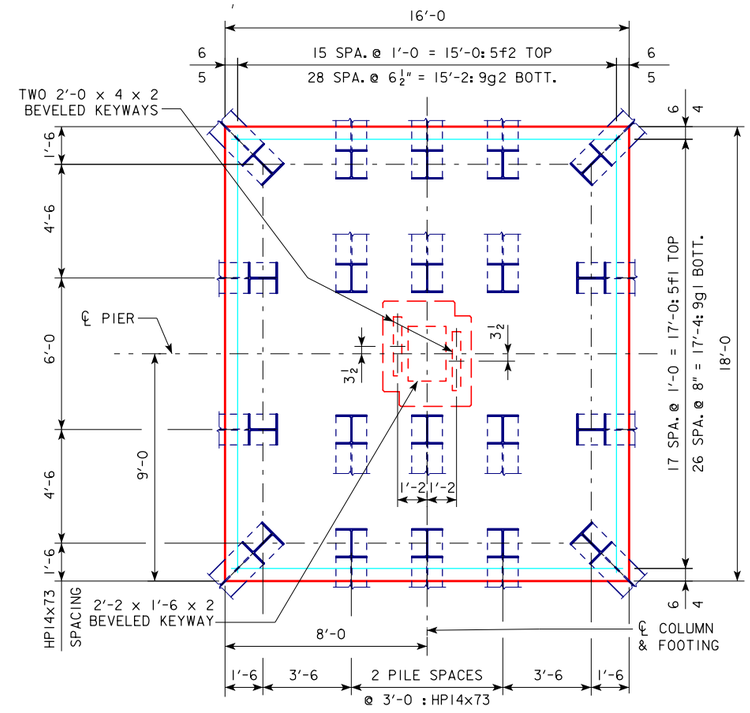

FOOTING PLAN PIER 30

THE CONTRACT LENGTH OF 20 FEET FOR THE PIER 30 PILES IS BASED ON A TOTAL FACTORED AXIAL LOAD PER PILE (PU) OF 148 KIPS, AND A GEOTECHNICAL RESISTANCE FACTOR (PHI) OF 0.7 FOR ROCK END BEARING. PILES ALSO WERE DESIGNED FOR A FACTORED TENSION FORCE OF 1 KIP.

THE NOMINAL AXIAL BEARING RESISTANCE FOR CONSTRUCTION CONTROL WAS DETERMINED FROM A GEOTECHNICAL RESISTANCE FACTOR (PHI) OF 0.7 FOR ROCK END BEARING. PILES ARE ASSUMED TO BE DRIVEN FROM A START ELEVATION AT THE BOTTOM OF FOOTING (OR BOTTOM OF CORING IF REQUIRED-SEE GENERAL NOTES.)

THE REQUIRED NOMINAL AXIAL BEARING RESISTANCE FOR PIER 30 PILES IS 106 TONS AT END OF DRIVE. THE PILE CONTRACT LENGTH SHALL BE DRIVEN AS PER PLAN UNLESS PILES REACH REFUSAL. IN NO CASE SHALL A PILE BE EMBEDDED LESS THAN 10 FEET. CONSTRUCTION CONTROL REQUIRES A WEAP ANALYSIS WITH BEARING GRAPH.

NOTE:
PILE DIMENSIONS SHOWN ARE AT BOTTOM OF FOOTING.
BATTER PILES 4:1 IN DIRECTION SHOWN. MINIMUM PILE LENGTH SHALL BE 10'-0. SEE GENERAL NOTES. TEST PILES RECOMMENDED AT PIERS 22, 29, 30 & 31. SEE GENERAL NOTES.

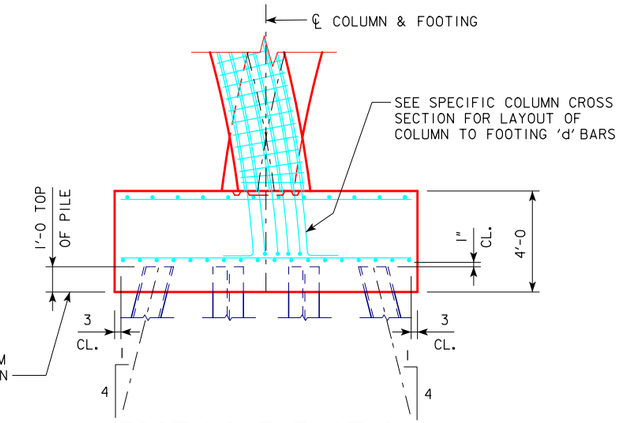

FOOTING ELEVATION PIER 31

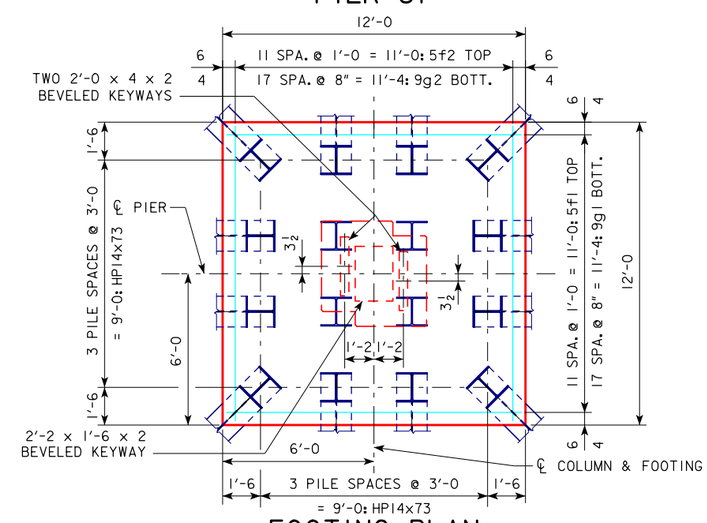

FOOTING PLAN PIER 31

THE CONTRACT LENGTH OF 25 FEET FOR THE PIER 31 PILES IS BASED ON A TOTAL FACTORED AXIAL LOAD PER PILE (PU) OF 151 KIPS, AND A GEOTECHNICAL RESISTANCE FACTOR (PHI) OF 0.7 FOR ROCK END BEARING.

THE NOMINAL AXIAL BEARING RESISTANCE FOR CONSTRUCTION CONTROL WAS DETERMINED FROM A GEOTECHNICAL RESISTANCE FACTOR (PHI) OF 0.7 FOR ROCK END BEARING. PILES ARE ASSUMED TO BE DRIVEN FROM A START ELEVATION AT THE BOTTOM OF FOOTING (OR BOTTOM OF CORING IF REQUIRED-SEE GENERAL NOTES.)

THE REQUIRED NOMINAL AXIAL BEARING RESISTANCE FOR PIER 31 PILES IS 108 TONS AT END OF DRIVE. THE PILE CONTRACT LENGTH SHALL BE DRIVEN AS PER PLAN UNLESS PILES REACH REFUSAL. CONSTRUCTION CONTROL REQUIRES A WEAP ANALYSIS WITH BEARING GRAPH.

whks
engineers + planners + land surveyors

45-HP14x73 STEEL BEARING PILES (15' LONG) REQUIRED AT PIER 29.
60-HP14x73 STEEL BEARING PILES (20' LONG) REQUIRED AT PIER 30.
48-HP14x73 STEEL BEARING PILES (25' LONG) REQUIRED AT PIER 31

DESIGN FOR VARIABLE SKEW (L.A.)

2271'-6 x VARI. CONTINUOUS WELDED GIRDER BRIDGE-EBL W/14' BIKE TRAIL

138'-10 & 151'-0⅞ END SPANS MULTIPLE LENGTH INTERIOR SPANS

PIER FOOTING DETAILS

STA. 6792+60.93 - 52' LEFT ℄ I-74 OCTOBER, 2015

SCOTT COUNTY

IOWA DEPARTMENT OF TRANSPORTATION - HIGHWAY DIVISION

DESIGN SHEET NO. 59 OF 282 FILE NO. 30253 DESIGN NO. 3408

DESIGN TEAM RE / TA / JS | SCOTT COUNTY | PROJECT NUMBER BRFIM-074-1(200)5--05-82 | SHEET NUMBER 60

BENCH MARK NO. 500: STA. 6781+18.92 LT. 161.19'
ELEV. 575.797, CHISELED "X" IN BOLT E. SIDE
CONCRETE STRUCTURE

PIER FOOTING INFORMATION - PIERS 17 - 31

PIER NO.	FIXED OR EXPANSION BEARINGS	FOOTING TYPE	FOOTING WIDTH (A) (LONGIT. TO ℄ PIER)	FOOTING LENGTH (B) (TRANSV. TO ℄ PIER)	FOOTING THICKNESS (C)	DEPTH OF COLUMN TIES INTO FOOTING (D)	NO. OF PILES PER FOOTING	LENGTH OF EACH PILE (FT.)	BOTTOM OF FOOTING ELEV.	NO. OF SPACES				SPACING				TOTAL LENGTH				EDGE OFFSET			
										E	F	G	H	I	J	K	L	M	N	O	P	Q	R	S	T
EB PIER 17	E	SPREAD	14'-6	14'-6	4'-0	3'-1	-	-	553.50	14	33	14	33	1'-0	5"	1'-0	5"	14'-0	13'-9	14'-0	13'-9	3"	4 1/2"	3"	4 1/2"
EB PIER 18	F	SPREAD	14'-6	14'-6	4'-0	3'-1	-	-	553.94	14	33	14	33	1'-0	5"	1'-0	5"	14'-0	13'-9	14'-0	13'-9	3"	4 1/2"	3"	4 1/2"
EB PIER 19	F	SPREAD	13'-0	14'-6	4'-0	2'-1	-	-	555.92	12	27	14	30	1'-0	5.5"	1'-0	5.5"	12'-0	12'-4 1/2	14'-0	13'-9	6"	3 3/4"	3"	4 1/2"
EB PIER 20	E	SPREAD	11'-6	12'-0	4'-0	2'-1	-	-	556.93	11	21	11	22	1'-0	6"	1'-0	6"	11'-0	10'-6	11'-0	11'-0	3"	6"	6"	6"
EB PIER 21	E	SPREAD	18'-0	18'-0	5'-0	2'-1	-	-	553.84	17	26	17	26	1'-0	8"	1'-0	8"	17'-0	17'-4	17'-0	17'-4	6"	4"	6"	4"
EB PIER 22	F	PILE	12'-0	12'-0	4'-0	N/A	12	15	559.94	11	17	11	17	1'-0	8"	1'-0	8"	11'-0	11'-4	11'-0	11'-4	6"	4"	6"	4"
EB PIER 23	F	PILE	11'-0	13'-0	4'-0	N/A	9	20	565.70	10	18	12	18	1'-0	7"	1'-0	8"	10'-0	10'-6	12'-0	12'-0	6"	3"	6"	6"
EB PIER 24	E	SPREAD	10'-0	10'-0	4'-0	N/A	-	-	564.97	9	18	9	18	1'-0	6"	1'-0	6"	9'-0	9'-0	9'-0	9'-0	6"	6"	6"	6"
EB PIER 25	E	SPREAD	9'-0	10'-0	4'-0	N/A	-	-	564.97	8	12	9	14	1'-0	8"	1'-0	8"	8'-0	8'-0	9'-0	9'-4	6"	6"	6"	4"
EB PIER 26	F	SPREAD	10'-0	14'-6	4'-0	N/A	-	-	563.00	9	28	14	27	1'-0	4"	1'-0	6"	9'-0	9'-4	14'-0	13'-6	6"	4"	3"	6"
EB PIER 27	F	SPREAD	10'-0	14'-6	4'-0	N/A	-	-	565.99	9	28	14	27	1'-0	4"	1'-0	6"	9'-0	9'-4	14'-0	13'-6	6"	4"	3"	6"
EB PIER 28	E	SPREAD	9'-0	10'-0	4'-0	N/A	-	-	567.59	8	12	9	14	1'-0	8"	1'-0	8"	8'-0	8'-0	9'-0	9'-4	6"	6"	6"	4"
EB PIER 29	F	PILE	15'-0	18'-0	5'-0	N/A	15	15	570.17	14	28	17	26	1'-0	6"	1'-0	8"	14'-0	14'-0	17'-0	17'-4	6"	6"	6"	4"
EB PIER 30	F	PILE	16'-0	18'-0	5'-0	N/A	20	20	571.18	15	28	17	26	1'-0	6.5"	1'-0	8"	15'-0	15'-2	17'-0	17'-4	6"	5"	6"	4"
EB PIER 31	E	PILE	12'-0	12'-0	4'-0	N/A	16	25	571.96	11	17	11	17	1'-0	8"	1'-0	8"	11'-0	11'-4	11'-0	11'-4	6"	4"	6"	4"

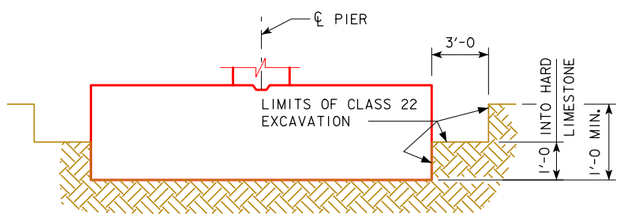

PIER FOOTING EXCAVATION LIMITS AND ROCK KEY

NOTE:
FOOTINGS TO EXTEND AT LEAST 1'-0 INTO COMPETENT LIMESTONE WITH THE BOTTOM 1'-0 OF EXCAVATION TO BE TO THE NEAT LINES OF THE FOOTING.

CONDUIT WILL BE PRESENT IN THE PIER FOOTINGS OF PIERS 18, 19, 21, 26, 27, AND 29.; SEE SHEETS P.23, P.29, N.16, N.17, AND N.19 FOR PLACEMENT DETAILS.

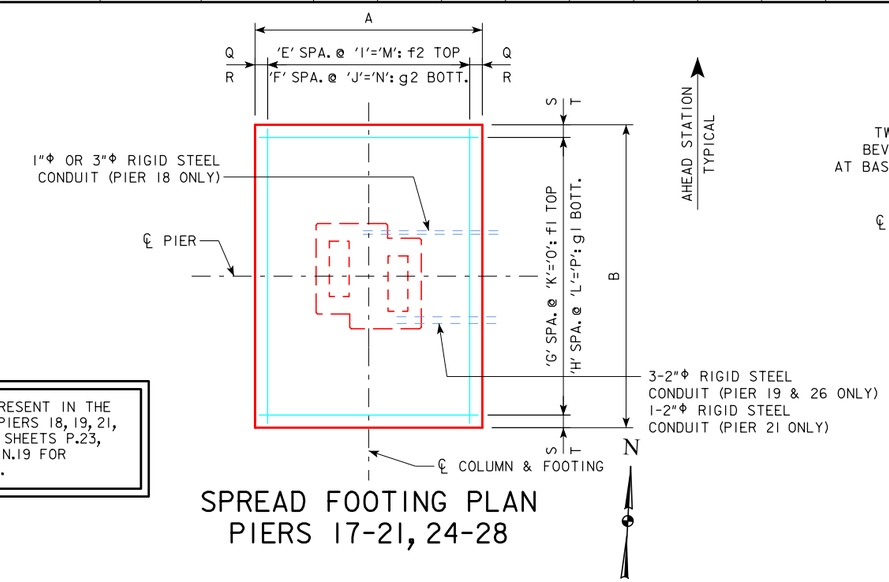

SPREAD FOOTING PLAN PIERS 17-21, 24-28

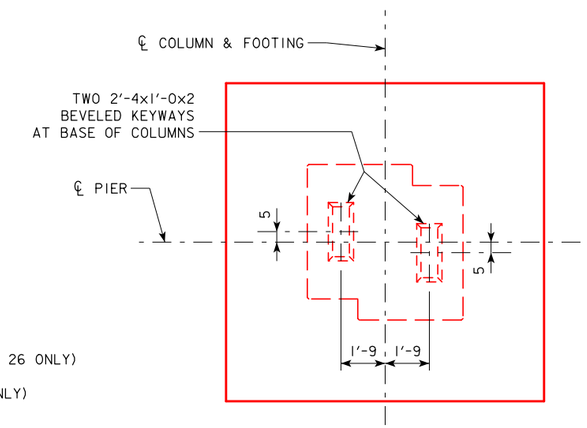

KEYWAY DETAIL FOR PIERS 17 & 18 COLUMNS

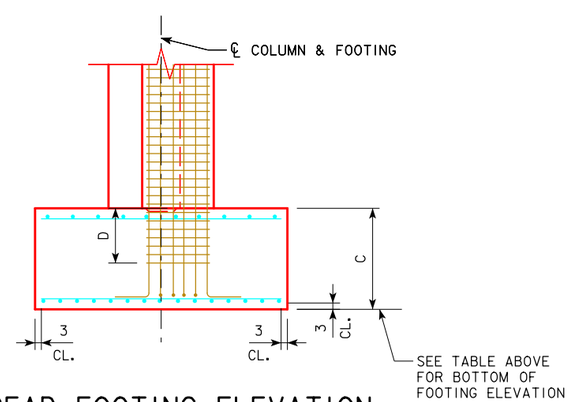

SPREAD FOOTING ELEVATION PIERS 17-21

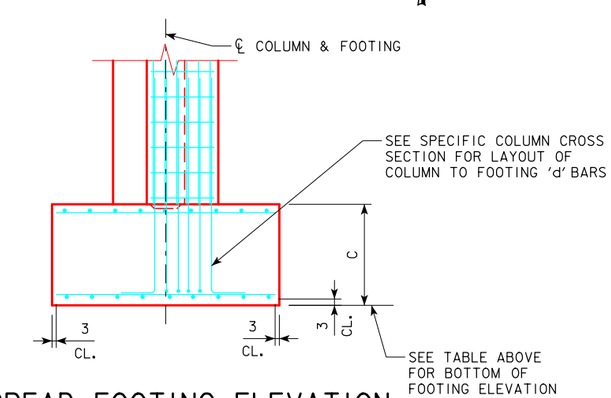

SPREAD FOOTING ELEVATION PIERS 24-28

whks
engineers + planners + land surveyors

DESIGN FOR VARIABLE SKEW (L.A.)

2271'-6 x VARI. CONTINUOUS WELDED GIRDER BRIDGE-EBL W/14' BIKE TRAIL

138'-10 & 151'-0 7/8 END SPANS MULTIPLE LENGTH INTERIOR SPANS

PIER FOOTING DETAILS

STA. 6792+60.93 - 52' LEFT ℄ I-74 OCTOBER, 2015

SCOTT COUNTY

IOWA DEPARTMENT OF TRANSPORTATION - HIGHWAY DIVISION

DESIGN SHEET NO. 60 OF 282 FILE NO. 30253 DESIGN NO. 3408

DESIGN TEAM RE / TA / JS | SCOTT COUNTY | PROJECT NUMBER BRFIM-074-1(200)5--05-82 | SHEET NUMBER 61

BENT BAR DETAILS PIERS 22-24, 26 & 27, 29-31

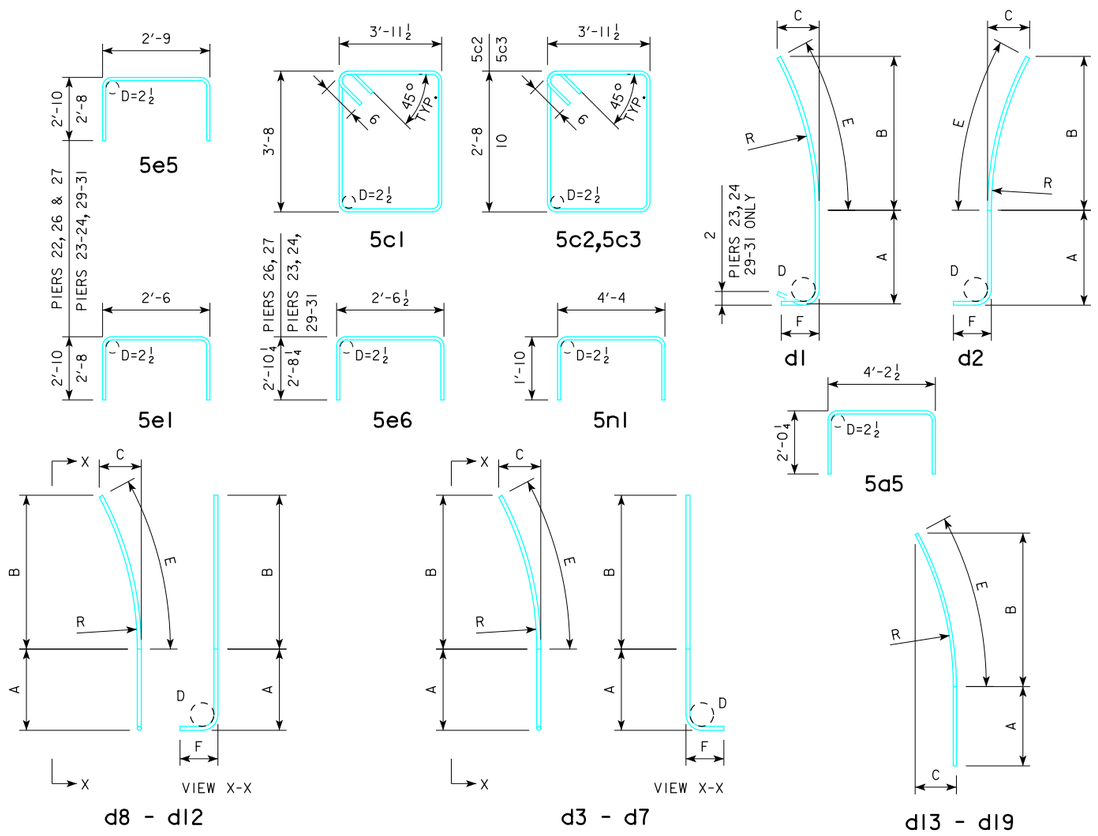

NOTES: ALL DIMENSIONS ARE OUT TO OUT. D = PIN DIA.
SEE TABLES FOR DIMENSIONS OF d1 - d19

'R' IS THE INSIDE OF RADIUS OF REBAR. DIMENSION 'C' IS APPROXIMATE.

FTG. & COLUMN BAR DIM. TABLE PIER 22

BAR	A	B	C	D	E	F	R
8d1-22	6'-0 7/8	3'-5	2 3/4	6	3'-5	1'-4	40'-9 5/8
8d2-22	6'-0 7/8	3'-5	2 5/8	6	3'-5	1'-4	43'-1 3/8
8d3-22	6'-0 7/8	3'-5	2 3/4	6	3'-5	1'-4	41'-3 1/8
8d4-22	6'-0 7/8	3'-5	2 5/8	6	3'-5	1'-4	41'-8 5/8
8d5-22	6'-0 7/8	3'-5	2 5/8	6	3'-5	1'-4	42'-2 1/4
8d6-22	6'-0 7/8	3'-5	2 5/8	6	3'-5	1'-4	42'-7 3/4
8d7-22	-	-	-	-	-	-	-
8d8-22	6'-0 7/8	3'-5	2 3/4	6	3'-5	1'-4	41'-3 1/8
8d9-22	6'-0 7/8	3'-5	2 5/8	6	3'-5	1'-4	41'-8 5/8
8d10-22	6'-0 7/8	3'-5	2 5/8	6	3'-5	1'-4	42'-2 1/4
8d11-22	6'-0 7/8	3'-5	2 5/8	6	3'-5	1'-4	42'-7 3/4
8d12-22	-	-	-	-	-	-	-
8d13-22	3'-4	20'-9 1/4	5'-8 7/8	-	21'-9 1/2	-	40'-9 5/8
8d14-22	3'-4	20'-9 1/4	5'-8	-	21'-9 1/8	-	41'-3 1/8
8d15-22	3'-4	20'-9 1/4	5'-7 1/8	-	21'-8 7/8	-	41'-8 5/8
8d16-22	3'-4	20'-9 1/4	5'-6 3/8	-	21'-8 1/2	-	42'-2 1/4
8d17-22	3'-4	20'-9 1/4	5'-5 1/2	-	21'-8 1/4	-	42'-7 3/4
8d18-22	3'-4	20'-9 1/4	5'-4 3/4	-	21'-8	-	43'-1 3/8
8d19-22	-	-	-	-	-	-	-

FTG. & COLUMN BAR DIM. TABLE PIER 23

BAR	A	B	C	D	E	F	R
7d1-23	-	6'-2	6 1/2	5 1/4	6'-2 3/8	1'-2	40'-9 5/8
7d2-23	-	6'-2	6 1/8	5 1/4	6'-2 1/4	1'-2	43'-1 1/2
7d3-23	-	6'-2	6 3/8	5 1/4	6'-2 1/4	1'-2	41'-3 1/4
7d4-23	-	6'-2	6 3/8	5 1/4	6'-2 1/4	1'-2	41'-8 3/4
7d5-23	-	6'-2	6 1/4	5 1/4	6'-2 1/4	1'-2	42'-2 3/8
7d6-23	-	6'-2	6 1/4	5 1/4	6'-2 1/4	1'-2	42'-7 7/8
7d7-23	-	-	-	-	-	-	-
7d8-23	-	6'-2	6 3/8	5 1/4	6'-2 1/4	1'-2	41'-3 1/4
7d9-23	-	6'-2	6 3/8	5 1/4	6'-2 1/4	1'-2	41'-8 3/4
7d10-23	-	6'-2	6 1/4	5 1/4	6'-2 1/4	1'-2	42'-2 3/8
7d11-23	-	6'-2	6 1/4	5 1/4	6'-2 1/4	1'-2	42'-7 7/8
7d12-23	-	-	-	-	-	-	-
7d13-23	-	17'-4 1/2	3'-11 3/8	-	17'-11 3/8	-	40'-9 5/8
7d14-23	-	17'-4 3/8	3'-10 5/8	-	17'-11	-	41'-3 1/4
7d15-23	-	17'-4 1/4	3'-10	-	17'-10 3/4	-	41'-8 3/4
7d16-23	-	17'-4 1/8	3'-9 1/2	-	17'-10 1/2	-	42'-2 3/8
7d17-23	-	17'-4	3'-8 7/8	-	17'-10 1/8	-	42'-7 7/8
7d18-23	-	17'-3 7/8	3'-7 1/2	-	17'-9 7/8	-	43'-1 1/2
7d19-23	-	-	-	-	-	-	-

'R' IS THE INSIDE OF RADIUS OF REBAR. DIMENSION 'C' IS APPROXIMATE.

FTG. & COLUMN BAR DIM. TABLE PIER 24

BAR	A	B	C	D	E	F	R
7d1-24	4 1/8	6'-9 1/8	7 5/8	5 1/4	6'-9 1/2	1'-2	40'-9 5/8
7d2-24	4 1/8	6'-9 1/8	7 1/4	5 1/4	6'-9 1/2	1'-2	43'-1 1/2
7d3-24	4 1/8	6'-9 1/8	7 1/2	5 1/4	6'-9 1/2	1'-2	41'-3 1/4
7d4-24	4 1/8	6'-9 1/8	7 1/2	5 1/4	6'-9 1/2	1'-2	41'-8 3/4
7d5-24	4 1/8	6'-9 1/8	7 3/8	5 1/4	6'-9 1/2	1'-2	42'-2 3/8
7d6-24	4 1/8	6'-9 1/8	7 3/8	5 1/4	6'-9 1/2	1'-2	42'-7 7/8
7d7-24	-	-	-	-	-	-	-
7d8-24	4 1/8	6'-9 1/8	7 1/2	5 1/4	6'-9 1/2	1'-2	41'-3 1/4
7d9-24	4 1/8	6'-9 1/8	7 1/2	5 1/4	6'-9 1/2	1'-2	41'-8 3/4
7d10-24	4 1/8	6'-9 1/8	7 3/8	5 1/4	6'-9 1/2	1'-2	42'-2 3/8
7d11-24	4 1/8	6'-9 1/8	7 3/8	5 1/4	6'-9 1/2	1'-2	42'-7 7/8
7d12-24	-	-	-	-	-	-	-
7d13-24	-	17'-10	4'-1 7/8	-	18'-5 3/8	-	40'-9 5/8
7d14-24	-	17'-9 7/8	4'-1 1/4	-	18'-5 1/8	-	41'-3 1/4
7d15-24	-	17'-9 3/4	4'-0 5/8	-	18'-4 3/4	-	41'-8 3/4
7d16-24	-	17'-9 5/8	4'-0	-	18'-4 1/2	-	42'-2 3/8
7d17-24	-	17'-9 1/2	3'-11 3/8	-	18'-4 1/4	-	42'-7 7/8
7d18-24	-	17'-9 3/8	3'-10 3/4	-	18'-3 7/8	-	43'-1 1/2
7d19-24	-	-	-	-	-	-	-

FTG. & COLUMN BAR DIM. TABLE PIER 26

BAR	A	B	C	D	E	F	R
10d1-26	3'-6	11'-0 3/8	1'-7 3/8	10 3/4	11'-2	1'-10	40'-9 5/8
10d2-26	3'-6	11'-0 3/8	1'-6 3/8	10 3/4	11'-1 3/4	1'-10	43'-1 1/8
10d3-26	3'-6	11'-0 3/8	1'-7 1/4	10 3/4	11'-2	1'-10	41'-2 1/4
10d4-26	3'-6	11'-0 3/8	1'-7	10 3/4	11'-1 7/8	1'-10	41'-6 3/4
10d5-26	3'-6	11'-0 3/8	1'-6 7/8	10 3/4	11'-1 7/8	1'-10	41'-11 3/8
10d6-26	3'-6	11'-0 3/8	1'-6 3/4	10 3/4	11'-1 7/8	1'-10	42'-4
10d7-26	3'-6	11'-0 3/8	1'-5 3/8	10 3/4	11'-1 7/8	1'-10	42'-8 1/2
10d8-26	3'-6	11'-0 3/8	1'-7 1/4	10 3/4	11'-2	1'-10	41'-2 1/4
10d9-26	3'-6	11'-0 3/8	1'-7	10 3/4	11'-1 7/8	1'-10	41'-6 3/4
10d10-26	3'-6	11'-0 3/8	1'-6 7/8	10 3/4	11'-1 7/8	1'-10	41'-11 3/8
10d11-26	3'-6	11'-0 3/8	1'-6 3/4	10 3/4	11'-1 7/8	1'-10	42'-4
10d12-26	3'-6	11'-0 3/8	1'-5 3/8	10 3/4	11'-1 7/8	1'-10	42'-8 1/2
10d13-26	-	20'-7 5/8	5'-8 1/8	-	21'-7 1/2	-	40'-9 5/8
10d14-26	-	20'-7 5/8	5'-7 3/8	-	21'-7 1/4	-	41'-2 1/4
10d15-26	-	20'-7 5/8	5'-5 5/8	-	21'-7	-	41'-6 3/4
10d16-26	-	20'-7 5/8	5'-6	-	21'-6 3/4	-	41'-11 3/8
10d17-26	-	20'-7 5/8	5'-5 3/8	-	21'-6 1/2	-	42'-4
10d18-26	-	20'-7 1/2	5'-4 5/8	-	21'-6 1/4	-	42'-8 1/2
10d19-26	-	20'-7 1/2	5'-4	-	21'-6 1/8	-	43'-1 1/8

FTG. & COLUMN BAR DIM. TABLE PIER 27

BAR	A	B	C	D	E	F	R
10d1-27	1'-6	13'-0 3/8	2'-2 3/4	10 3/4	13'-3 1/8	1'-10	40'-9 5/8
10d2-27	1'-6	13'-0 3/8	2'-1 3/8	10 3/4	13'-2 7/8	1'-10	43'-1 1/8
10d3-27	1'-6	13'-0 3/8	2'-2 1/2	10 3/4	13'-3 1/8	1'-10	41'-2 1/4
10d4-27	1'-6	13'-0 3/8	2'-2 1/4	10 3/4	13'-3 1/8	1'-10	41'-6 3/4
10d5-27	1'-6	13'-0 3/8	2'-2	10 3/4	13'-3	1'-10	41'-11 3/8
10d6-27	1'-6	13'-0 3/8	2'-1 7/8	10 3/4	13'-3	1'-10	42'-4
10d7-27	1'-6	13'-0 3/8	2'-1 5/8	10 3/4	13'-2 7/8	1'-10	42'-8 1/2
10d8-27	1'-6	13'-0 3/8	2'-2 1/2	10 3/4	13'-3 1/8	1'-10	41'-2 1/4
10d9-27	1'-6	13'-0 3/8	2'-2 1/4	10 3/4	13'-3 1/8	1'-10	41'-6 3/4
10d10-27	1'-6	13'-0 3/8	2'-2	10 3/4	13'-3	1'-10	41'-11 3/8
10d11-27	1'-6	13'-0 3/8	2'-1 7/8	10 3/4	13'-3	1'-10	42'-4
10d12-27	1'-6	13'-0 3/8	2'-1 5/8	10 3/4	13'-2 7/8	1'-10	42'-8 1/2
10d13-27	-	18'-10 5/8	4'-8 1/2	-	19'-7 1/2	-	40'-9 5/8
10d14-27	-	18'-10 1/2	4'-7 7/8	-	19'-7 1/4	-	41'-2 1/4
10d15-27	-	18'-10 1/2	4'-7 3/8	-	19'-7	-	41'-6 3/4
10d16-27	-	18'-10 3/8	4'-6 3/4	-	19'-6 3/4	-	41'-11 3/8
10d17-27	-	18'-10 3/8	4'-6 1/4	-	19'-6 1/2	-	42'-4
10d18-27	-	18'-10 1/4	4'-5 5/8	-	19'-6 1/4	-	42'-8 1/2
10d19-27	-	18'-10 1/4	4'-5 1/8	-	19'-6 1/8	-	43'-1 1/8

FTG. & COLUMN BAR DIM. TABLE PIER 29 & 30

BAR	A	B	C	D	E	F	R
10d1-29	-	11'-1 1/4	1'-7 5/8	10 3/4	11'-2 7/8	1'-10	40'-9 5/8
10d2-29	-	11'-1 1/8	1'-6 5/8	10 3/4	11'-2 5/8	1'-10	43'-1 1/8
10d3-29	-	11'-1 1/8	1'-7 1/2	10 3/4	11'-2 5/8	1'-10	41'-2 1/4
10d4-29	-	11'-1 1/8	1'-7 1/4	10 3/4	11'-2 3/4	1'-10	41'-6 3/4
10d5-29	-	11'-1 1/8	1'-7 1/8	10 3/4	11'-2 3/4	1'-10	41'-11 3/8
10d6-29	-	11'-1 1/8	1'-6 7/8	10 3/4	11'-2 3/4	1'-10	42'-4
10d7-29	-	11'-1 1/8	1'-6 3/4	10 3/4	11'-2 5/8	1'-10	42'-8 1/2
10d8-29	-	11'-1 1/8	1'-7 1/2	10 3/4	11'-2 7/8	1'-10	41'-2 1/4
10d9-29	-	11'-1 1/8	1'-7 1/4	10 3/4	11'-2 3/4	1'-10	41'-6 3/4
10d10-29	-	11'-1 1/8	1'-7 1/8	10 3/4	11'-2 3/4	1'-10	41'-11 3/8
10d11-29	-	11'-1 1/8	1'-6 7/8	10 3/4	11'-2 3/4	1'-10	42'-4
10d12-29	-	11'-1 1/8	1'-6 3/4	10 3/4	11'-2 5/8	1'-10	42'-8 1/2
10d13-29	-	16'-0 1/8	3'-4 1/4	-	16'-5 3/8	-	40'-9 5/8
10d14-29	-	15'-11 7/8	3'-2 5/8	-	16'-5 1/8	-	41'-2 1/4
10d15-29	-	15'-11 3/4	3'-3 3/8	-	16'-4 7/8	-	41'-6 3/4
10d16-29	-	15'-11 5/8	3'-3	-	16'-4 5/8	-	41'-11 3/8
10d17-29	-	15'-11 1/2	3'-2 5/8	-	16'-4 3/8	-	42'-4
10d18-29	-	15'-11 3/8	3'-2 1/8	-	16'-4 1/8	-	42'-8 1/2
10d19-29	-	15'-11 1/4	3'-1 3/4	-	16'-3 7/8	-	43'-1 1/8

FTG. & COLUMN BAR DIM. TABLE PIER 31

BAR	A	B	C	D	E	F	R
7d1-31	-	6'-2 1/4	6 1/2	5 1/4	6'-2 1/2	1'-2	40'-9 5/8
7d2-31	-	6'-2 1/4	6 1/4	5 1/4	6'-2 1/2	1'-2	43'-1 1/2
7d3-31	-	6'-2 1/4	6 1/2	5 1/4	6'-2 1/2	1'-2	41'-3 1/4
7d4-31	-	6'-2 1/4	6 3/8	5 1/4	6'-2 1/2	1'-2	41'-8 3/4
7d5-31	-	6'-2 1/4	6 3/8	5 1/4	6'-2 1/2	1'-2	42'-2 3/8
7d6-31	-	6'-2 1/4	6 1/4	5 1/4	6'-2 1/2	1'-2	42'-7 7/8
7d7-31	-	-	-	-	-	-	-
7d8-31	-	6'-2 1/4	6 1/2	5 1/4	6'-2 1/2	1'-2	41'-3 1/4
7d9-31	-	6'-2 1/4	6 3/8	5 1/4	6'-2 1/2	1'-2	41'-8 3/4
7d10-31	-	6'-2 1/4	6 3/8	5 1/4	6'-2 1/2	1'-2	42'-2 3/8
7d11-31	-	6'-2 1/4	6 1/4	5 1/4	6'-2 1/2	1'-2	42'-7 7/8
7d12-31	-	-	-	-	-	-	-
7d13-31	-	17'-11 3/4	4'-2 3/4	-	18'-7 3/8	-	40'-9 5/8
7d14-31	-	17'-11 5/8	4'-2 1/8	-	18'-7 1/8	-	41'-3 1/4
7d15-31	-	17'-11 1/2	4'-1 1/2	-	18'-6 3/4	-	41'-8 3/4
7d16-31	-	17'-11 3/8	4'-0 3/4	-	18'-6 1/2	-	42'-2 3/8
7d17-31	-	17'-11 3/8	4'-0 1/8	-	18'-6 1/4	-	42'-7 7/8
7d18-31	-	17'-11 1/4	3'-11 5/8	-	18'-6	-	43'-1 1/2
7d19-31	-	-	-	-	-	-	-

NOTE:
DESIGNATION "-20" SIGNIFIES BAR ASSOCIATED WITH PIER 20 OF THE EASTBOUND DESIGN NO. 3408 BRIDGE (TYP.)

SEE DESIGN SHEET 65 FOR ESTIMATED QUANTITIES.

PIERS 22, 26 & 27 REINFORCING BARS ARE EPOXY COATED.

whks
engineers + planners + land surveyors

DESIGN FOR VARIABLE SKEW (L.A.)

2271'-6 x VARI. CONTINUOUS WELDED GIRDER BRIDGE-EBL W/14' BIKE TRAIL

138'-10 & 151'-0 7/8 END SPANS MULTIPLE LENGTH INTERIOR SPANS

PIER BAR DETAILS & DIMENSIONS

STA. 6792+60.93 - 52' LEFT ℄ I-74 OCTOBER, 2015

SCOTT COUNTY

IOWA DEPARTMENT OF TRANSPORTATION - HIGHWAY DIVISION

DESIGN SHEET NO. 61 OF 282 FILE NO. 30253 DESIGN NO. 3408

REINFORCING BAR LIST - PIER 22

EPOXY-COATED BARS

	BAR	LOCATION	SHAPE	NO.	LENGTH	WEIGHT
	9a1-22	CAP, LONGITUDINAL-TOP		22	40'-0	2,992
	9a2-22	CAP, LONGITUDINAL-TOP		22	34'-10	2,606
	5a3-22	CAP, LONGITUDINAL-SIDES		16	34'-2	570
	5a5-22	CAP, ENDS		16	8'-3	138
	8b1-22	CAP, LONGITUDINAL-BOTTOM		36	34'-6	3,316
	5c1-22	CAP, STIRRUP		182	16'-3	3,085
	5c2-22	CAP, STIRRUP-CANTILEVER		4	14'-3	59
	5c3-22	CAP, STIRRUP-CANTILEVER		4	10'-7	44
	8d1-22	COLUMN, VERTICAL TO FOOTING		42	10'-10	1,215
	8d2-22	COLUMN, VERTICAL TO FOOTING		42	10'-10	1,215
	8d3-22	COLUMN, VERTICAL TO FOOTING		6	10'-10	174
	8d4-22	COLUMN, VERTICAL TO FOOTING		6	10'-10	174
	8d5-22	COLUMN, VERTICAL TO FOOTING		6	10'-10	174
	8d6-22	COLUMN, VERTICAL TO FOOTING		6	10'-10	174
	8d8-22	COLUMN, VERTICAL TO FOOTING		6	10'-10	174
	8d9-22	COLUMN, VERTICAL TO FOOTING		6	10'-10	174
	8d10-22	COLUMN, VERTICAL TO FOOTING		6	10'-10	174
	8d11-22	COLUMN, VERTICAL TO FOOTING		6	10'-10	174
	8d13-22	COLUMN, VERTICAL		42	25'-2	2,822
	8d14-22	COLUMN, VERTICAL		12	25'-2	806
	8d15-22	COLUMN, VERTICAL		12	25'-1	804
	8d16-22	COLUMN, VERTICAL		12	25'-1	804
	8d17-22	COLUMN, VERTICAL		12	25'-1	804
	8d18-22	COLUMN, VERTICAL		42	25'-0	2,804
*	5e1-22	COLUMN TIE		516	8'-2	4,395
	5e5-22	COLUMN TIE		24	8'-5	211
	5m1-22	STEP, LONGITUDINAL		20	2'-10	59
	8m2-22	BASE STEP, LONGITUDINAL		5	28'-7	382
	5n1-22	STEP, TRANSVERSE		39	8'-0	325
	* REINFORCING STEEL - EPOXY-COATED - TOTAL (LBS.)					30,848

REINFORCING BAR LIST - PIER 23

NON-COATED BARS

	BAR	LOCATION	SHAPE	NO.	LENGTH	WEIGHT
	9a1-23	CAP, LONGITUDINAL-TOP		22	40'-0	2,992
	9a2-23	CAP, LONGITUDINAL-TOP		22	33'-2	2,481
	5a3-23	CAP, LONGITUDINAL-SIDES		16	33'-10	565
	5a5-23	CAP, ENDS		16	8'-3	138
	8b1-23	CAP, LONGITUDINAL-BOTTOM		36	33'-5	3,212
	5c1-23	CAP, STIRRUP		182	16'-3	3,085
	5c2-23	CAP, STIRRUP-CANTILEVER		4	14'-3	59
	5c3-23	CAP, STIRRUP-CANTILEVER		4	10'-7	44
	7d1-23	COLUMN, VERTICAL TO FOOTING		42	7'-5	637
	7d2-23	COLUMN, VERTICAL TO FOOTING		42	7'-5	637
	7d3-23	COLUMN, VERTICAL TO FOOTING		6	7'-5	91
	7d4-23	COLUMN, VERTICAL TO FOOTING		6	7'-5	91
	7d5-23	COLUMN, VERTICAL TO FOOTING		6	7'-5	91
	7d6-23	COLUMN, VERTICAL TO FOOTING		6	7'-5	91
	7d8-23	COLUMN, VERTICAL TO FOOTING		6	7'-5	91
	7d9-23	COLUMN, VERTICAL TO FOOTING		6	7'-5	91
	7d10-23	COLUMN, VERTICAL TO FOOTING		6	7'-5	91
	7d11-23	COLUMN, VERTICAL TO FOOTING		6	7'-5	91
	7d13-23	COLUMN, VERTICAL		42	18'-0	1,545
	7d14-23	COLUMN, VERTICAL		12	17'-11	439
	7d15-23	COLUMN, VERTICAL		12	17'-11	439
	7d16-23	COLUMN, VERTICAL		12	17'-11	439
	7d17-23	COLUMN, VERTICAL		12	17'-11	439
	7d18-23	COLUMN, VERTICAL		42	17'-10	1,531
*	5e1-23	COLUMN TIE		336	7'-10	2,745
	5e5-23	COLUMN TIE - TOP		24	8'-1	202
	5e6-23	COLUMN TIE - BOTTOM		12	7'-11	99
	5f1-23	FOOTING, TOP - TRANSVERSE		39	10'-6	427
	5f2-23	FOOTING, TOP - LONGITUDINAL		33	12'-6	430
	8g1-23	FOOTING, BOTTOM - TRANS.		57	10'-6	1,598
	8g2-23	FOOTING, BOTTOM - LONGIT.		57	12'-6	1,902
	5m1-23	STEP, LONGITUDINAL		20	2'-10	59
	8m2-23	BASE STEP, LONGITUDINAL		5	18'-11	253
	5n1-23	STEP, TRANSVERSE		33	8'-0	275
	REINFORCING STEEL - NON-COATED - TOTAL (LBS.)					27,400

REINFORCING BAR LIST - PIER 24

NON-COATED BARS

	BAR	LOCATION	SHAPE	NO.	LENGTH	WEIGHT
	9a1-24	CAP, LONGITUDINAL-TOP		22	40'-0	2,992
	9a2-24	CAP, LONGITUDINAL-TOP		22	33'-2	2,481
	5a3-24	CAP, LONGITUDINAL-SIDES		16	33'-10	565
	5a5-24	CAP, ENDS		16	8'-3	138
	8b1-24	CAP, LONGITUDINAL-BOTTOM		36	33'-5	3,212
	5c1-24	CAP, STIRRUP		182	16'-3	3,085
	5c2-24	CAP, STIRRUP-CANTILEVER		4	14'-3	59
	5c3-24	CAP, STIRRUP-CANTILEVER		4	10'-7	44
	7d1-24	COLUMN, VERTICAL TO FOOTING		42	8'-4	715
	7d2-24	COLUMN, VERTICAL TO FOOTING		42	8'-4	715
	7d3-24	COLUMN, VERTICAL TO FOOTING		6	8'-4	102
	7d4-24	COLUMN, VERTICAL TO FOOTING		6	8'-4	102
	7d5-24	COLUMN, VERTICAL TO FOOTING		6	8'-4	102
	7d6-24	COLUMN, VERTICAL TO FOOTING		6	8'-4	102
	7d8-24	COLUMN, VERTICAL TO FOOTING		6	8'-4	102
	7d9-24	COLUMN, VERTICAL TO FOOTING		6	8'-4	102
	7d10-24	COLUMN, VERTICAL TO FOOTING		6	8'-4	102
	7d11-24	COLUMN, VERTICAL TO FOOTING		6	8'-4	102
	7d13-24	COLUMN, VERTICAL		42	18'-6	1,588
	7d14-24	COLUMN, VERTICAL		12	18'-6	454
	7d15-24	COLUMN, VERTICAL		12	18'-5	452
	7d16-24	COLUMN, VERTICAL		12	18'-5	452
	7d17-24	COLUMN, VERTICAL		12	18'-5	452
	7d18-24	COLUMN, VERTICAL		42	18'-4	1,574
*	5e1-24	COLUMN TIE		348	7'-10	2,843
	5e5-24	COLUMN TIE - TOP		24	8'-1	202
	5e6-24	COLUMN TIE - BOTTOM		12	7'-11	99
	5f1-24	FOOTING, TOP - TRANSVERSE		30	9'-6	297
	5f2-24	FOOTING, TOP - LONGITUDINAL		30	9'-6	297
	8g1-24	FOOTING, BOTTOM - TRANS.		57	9'-6	1,446
	8g2-24	FOOTING, BOTTOM - LONGIT.		57	9'-6	1,446
	5m1-24	STEP, LONGITUDINAL		20	2'-10	59
	8m2-24	BASE STEP, LONGITUDINAL		5	18'-11	253
	5n1-24	STEP, TRANSVERSE		33	8'-0	275
	* REINFORCING STEEL - NON-COATED - TOTAL (LBS.)					27,011

REINFORCING BAR LIST - PIER 26

EPOXY-COATED BARS

	BAR	LOCATION	SHAPE	NO.	LENGTH	WEIGHT
	10a1-26	CAP, LONGITUDINAL-TOP		22	40'-0	3,787
	10a2-26	CAP, LONGITUDINAL-TOP		22	37'-6	3,550
	5a3-26	CAP, LONGITUDINAL-SIDES		16	34'-2	570
	5a5-26	CAP, ENDS		16	8'-3	138
	9b1-26	CAP, LONGITUDINAL-BOTTOM		36	35'-6	4,345
	5c1-26	CAP, STIRRUP		178	16'-3	3,017
	5c2-26	CAP, STIRRUP-CANTILEVER		4	14'-3	59
	5c3-26	CAP, STIRRUP-CANTILEVER		4	10'-7	44
	10d1-26	COLUMN, VERTICAL TO FOOTING		48	16'-6	3,408
	10d2-26	COLUMN, VERTICAL TO FOOTING		48	16'-6	3,408
	10d3-26	COLUMN, VERTICAL TO FOOTING		6	16'-6	426
	10d4-26	COLUMN, VERTICAL TO FOOTING		6	16'-6	426
	10d5-26	COLUMN, VERTICAL TO FOOTING		6	16'-6	426
	10d6-26	COLUMN, VERTICAL TO FOOTING		6	16'-6	426
	10d7-26	COLUMN, VERTICAL TO FOOTING		6	16'-6	426
	10d8-26	COLUMN, VERTICAL TO FOOTING		6	16'-6	426
	10d9-26	COLUMN, VERTICAL TO FOOTING		6	16'-6	426
	10d10-26	COLUMN, VERTICAL TO FOOTING		6	16'-6	426
	10d11-26	COLUMN, VERTICAL TO FOOTING		6	16'-6	426
	10d12-26	COLUMN, VERTICAL TO FOOTING		6	16'-6	426
	10d13-26	COLUMN, VERTICAL		48	21'-8	4,475
	10d14-26	COLUMN, VERTICAL		12	21'-8	1,119
	10d15-26	COLUMN, VERTICAL		12	21'-7	1,114
	10d16-26	COLUMN, VERTICAL		12	21'-7	1,114
	10d17-26	COLUMN, VERTICAL		12	21'-7	1,114
	10d18-26	COLUMN, VERTICAL		12	21'-7	1,114
	10d19-26	COLUMN, VERTICAL		48	21'-7	4,458
*	5e1-26	COLUMN TIE		420	8'-2	3,577
	5e5-26	COLUMN TIE - TOP		24	8'-5	211
	5e6-26	COLUMN TIE - BOTTOM		12	8'-3	103
	5m1-26	STEP, LONGITUDINAL		20	2'-10	59
	8m2-26	BASE STEP, LONGITUDINAL		5	18'-11	253
	5n1-26	STEP, TRANSVERSE		33	8'-0	275
	* REINFORCING STEEL - EPOXY-COATED - TOTAL (LBS.)					45,572

REINFORCING BAR LIST - PIER 22

NON-COATED BARS

	LOCATION	SHAPE	NO.	LENGTH	WEIGHT
5f1-22	FOOTING, TOP - TRANSVERSE		36	11'-6	432
5f2-22	FOOTING, TOP - LONGITUDINAL		36	11'-6	432
9g1-22	FOOTING, BOTTOM - TRANS.		54	11'-6	2,111
9g2-22	FOOTING, BOTTOM - LONGIT.		54	11'-6	2,111
REINFORCING STEEL - NON-COATED - TOTAL (LBS.)					5,086

REINFORCING BAR LIST - PIER 26

NON-COATED BARS

BAR	LOCATION	SHAPE	NO.	LENGTH	WEIGHT
5f1-26	FOOTING, TOP - TRANSVERSE		45	9'-6	446
5f2-26	FOOTING, TOP - LONGITUDINAL		30	14'-0	438
9g1-26	FOOTING, BOTTOM - TRANS.		84	9'-6	2,713
10g2-26	FOOTING, BOTTOM - LONGIT.		87	14'-0	5,241
REINFORCING STEEL - NON-COATED - TOTAL (LBS.)					8,838

NOTE:
DESIGNATION "-22" SIGNIFIES BAR ASSOCIATED WITH PIER 22 OF THE EASTBOUND DESIGN NO. 3408 BRIDGE (TYP.)

*12 ADDITIONAL 5e1 BARS ARE PROVIDED FOR THE CONTRACTORS USE IF NECESSARY TO MAINTAIN MINIMUM SPACING.

SEE DESIGN SHEET 61 FOR BENT BAR DETAILS.

SEE DESIGN SHEET 65 FOR ESTIMATED QUANTITIES.

whks
engineers + planners + land surveyors

DESIGN FOR VARIABLE SKEW (L.A.)

2271'-6 x VARI. CONTINUOUS WELDED GIRDER BRIDGE-EBL W/14' BIKE TRAIL

138'-10 & 151'-0 7/8 END SPANS MULTIPLE LENGTH INTERIOR SPANS

PIER 22-24 & 26 BAR LISTS

STA. 6792+60.93 - 52' LEFT ℄ I-74 OCTOBER, 2015

SCOTT COUNTY

IOWA DEPARTMENT OF TRANSPORTATION - HIGHWAY DIVISION

DESIGN SHEET NO. 62 OF 282 FILE NO. 30253 DESIGN NO. 3408

REINFORCING BAR LIST - PIER 27

EPOXY-COATED BARS

	BAR	LOCATION	SHAPE	NO.	LENGTH	WEIGHT
	10a1-27	CAP, LONGITUDINAL-TOP		22	40'-0	3,787
	10a2-27	CAP, LONGITUDINAL-TOP		22	37'-6	3,550
	5a3-27	CAP, LONGITUDINAL-SIDES		16	34'-2	570
	5a5-27	CAP, ENDS		16	8'-3	138
	9b1-27	CAP, LONGITUDINAL-BOTTOM		36	35'-6	4,345
	5c1-27	CAP, STIRRUP		178	16'-3	3,017
	5c2-27	CAP, STIRRUP-CANTILEVER		4	14'-3	59
	5c3-27	CAP, STIRRUP-CANTILEVER		4	10'-7	44
	10d1-27	COLUMN, VERTICAL TO FOOTING		48	16'-8	3,442
	10d2-27	COLUMN, VERTICAL TO FOOTING		48	16'-7	3,425
	10d3-27	COLUMN, VERTICAL TO FOOTING		6	16'-8	430
	10d4-27	COLUMN, VERTICAL TO FOOTING		6	16'-8	430
	10d5-27	COLUMN, VERTICAL TO FOOTING		6	16'-7	428
	10d6-27	COLUMN, VERTICAL TO FOOTING		6	16'-7	428
	10d7-27	COLUMN, VERTICAL TO FOOTING		6	16'-7	428
	10d8-27	COLUMN, VERTICAL TO FOOTING		6	16'-8	430
	10d9-27	COLUMN, VERTICAL TO FOOTING		6	16'-8	430
	10d10-27	COLUMN, VERTICAL TO FOOTING		6	16'-7	428
	10d11-27	COLUMN, VERTICAL TO FOOTING		6	16'-7	428
	10d12-27	COLUMN, VERTICAL TO FOOTING		6	16'-7	428
	10d13-27	COLUMN, VERTICAL		48	19'-8	4,062
	10d14-27	COLUMN, VERTICAL		12	19'-8	1,016
	10d15-27	COLUMN, VERTICAL		12	19'-7	1,011
	10d16-27	COLUMN, VERTICAL		12	19'-7	1,011
	10d17-27	COLUMN, VERTICAL		12	19'-7	1,011
	10d18-27	COLUMN, VERTICAL		12	19'-7	1,011
	10d19-27	COLUMN, VERTICAL		48	19'-7	4,045
*	5e1-27	COLUMN TIE		372	8'-2	3,169
	5e5-27	COLUMN TIE - TOP		24	8'-5	211
	5e6-27	COLUMN TIE - BOTTOM		12	8'-3	103
	5m1-27	STEP, LONGITUDINAL		20	2'-10	59
	8m2-27	BASE STEP, LONGITUDINAL		5	18'-11	253
	5n1-27	STEP, TRANSVERSE		33	8'-0	275
	* REINFORCING STEEL - EPOXY-COATED - TOTAL (LBS.)					43,902

REINFORCING BAR LIST - PIER 27

NON-COATED BARS

		LOCATION	SHAPE	NO.	LENGTH	WEIGHT
	5f1-27	FOOTING, TOP - TRANSVERSE		45	9'-6	446
	5f2-27	FOOTING, TOP - LONGITUDINAL		30	14'-0	438
	9g1-27	FOOTING, BOTTOM - TRANS.		84	9'-6	2,713
	10g2-27	FOOTING, BOTTOM - LONGIT.		87	14'-0	5,241
	REINFORCING STEEL - NON-COATED - TOTAL (LBS.)					8,838

REINFORCING BAR LIST - PIER 29

NON-COATED BARS

	BAR	LOCATION	SHAPE	NO.	LENGTH	WEIGHT
	10a1-29	CAP, LONGITUDINAL-TOP		22	40'-0	3,787
	10a2-29	CAP, LONGITUDINAL-TOP		22	35'-4	3,345
	5a3-29	CAP, LONGITUDINAL-SIDES		16	33'-10	565
	5a5-29	CAP, ENDS		16	8'-3	138
	9b1-29	CAP, LONGITUDINAL-BOTTOM		36	34'-0	4,162
	5c1-29	CAP, STIRRUP		178	16'-3	3,017
	5c2-29	CAP, STIRRUP-CANTILEVER		4	14'-3	59
	5c3-29	CAP, STIRRUP-CANTILEVER		4	10'-7	44
	10d1-29	COLUMN, VERTICAL TO FOOTING		48	13'-1	2,702
	10d2-29	COLUMN, VERTICAL TO FOOTING		48	13'-1	2,702
	10d3-29	COLUMN, VERTICAL TO FOOTING		6	13'-1	338
	10d4-29	COLUMN, VERTICAL TO FOOTING		6	13'-1	338
	10d5-29	COLUMN, VERTICAL TO FOOTING		6	13'-1	338
	10d6-29	COLUMN, VERTICAL TO FOOTING		6	13'-1	338
	10d7-29	COLUMN, VERTICAL TO FOOTING		6	13'-1	338
	10d8-29	COLUMN, VERTICAL TO FOOTING		6	13'-1	338
	10d9-29	COLUMN, VERTICAL TO FOOTING		6	13'-1	338
	10d10-29	COLUMN, VERTICAL TO FOOTING		6	13'-1	338
	10d11-29	COLUMN, VERTICAL TO FOOTING		6	13'-1	338
	10d12-29	COLUMN, VERTICAL TO FOOTING		6	13'-1	338
	10d13-29	COLUMN, VERTICAL		48	16'-6	3,408
	10d14-29	COLUMN, VERTICAL		12	16'-6	852
	10d15-29	COLUMN, VERTICAL		12	16'-5	848
	10d16-29	COLUMN, VERTICAL		12	16'-5	848
	10d17-29	COLUMN, VERTICAL		12	16'-5	848
	10d18-29	COLUMN, VERTICAL		12	16'-5	848
	10d19-29	COLUMN, VERTICAL		48	16'-4	3,374
*	5e1-29	COLUMN TIE		288	7'-10	2,353
	5e5-29	COLUMN TIE - TOP		24	8'-1	202
	5e6-29	COLUMN TIE - BOTTOM		24	7'-11	198
	5f1-29	FOOTING, TOP - TRANSVERSE		54	14'-6	817
	5f2-29	FOOTING, TOP - LONGITUDINAL		45	17'-6	821
	9g1-29	FOOTING, BOTTOM - TRANS.		81	14'-6	3,993
	9g2-29	FOOTING, BOTTOM - LONGIT.		87	17'-6	5,177
	5m1-29	STEP, LONGITUDINAL		20	2'-10	59
	8m2-29	BASE STEP, LONGITUDINAL		5	18'-11	253
	5n1-29	STEP, TRANSVERSE		33	8'-0	275
	* REINFORCING STEEL - NON-COATED - TOTAL (LBS.)					49,075

REINFORCING BAR LIST - PIER 30

NON-COATED BARS

	BAR	LOCATION	SHAPE	NO.	LENGTH	WEIGHT
	10a1-30	CAP, LONGITUDINAL-TOP		22	40'-0	3,787
	10a2-30	CAP, LONGITUDINAL-TOP		22	35'-4	3,345
	5a3-30	CAP, LONGITUDINAL-SIDES		16	33'-10	565
	5a5-30	CAP, ENDS		16	8'-3	138
	9b1-30	CAP, LONGITUDINAL-BOTTOM		36	34'-0	4,162
	5c1-30	CAP, STIRRUP		178	16'-3	3,017
	5c2-30	CAP, STIRRUP-CANTILEVER		4	14'-3	59
	5c3-30	CAP, STIRRUP-CANTILEVER		4	10'-7	44
	10d1-30	COLUMN, VERTICAL TO FOOTING		48	13'-1	2,702
	10d2-30	COLUMN, VERTICAL TO FOOTING		48	13'-1	2,702
	10d3-30	COLUMN, VERTICAL TO FOOTING		6	13'-1	338
	10d4-30	COLUMN, VERTICAL TO FOOTING		6	13'-1	338
	10d5-30	COLUMN, VERTICAL TO FOOTING		6	13'-1	338
	10d6-30	COLUMN, VERTICAL TO FOOTING		6	13'-1	338
	10d7-30	COLUMN, VERTICAL TO FOOTING		6	13'-1	338
	10d8-30	COLUMN, VERTICAL TO FOOTING		6	13'-1	338
	10d9-30	COLUMN, VERTICAL TO FOOTING		6	13'-1	338
	10d10-30	COLUMN, VERTICAL TO FOOTING		6	13'-1	338
	10d11-30	COLUMN, VERTICAL TO FOOTING		6	13'-1	338
	10d12-30	COLUMN, VERTICAL TO FOOTING		6	13'-1	338
	10d13-30	COLUMN, VERTICAL		48	16'-6	3,408
	10d14-30	COLUMN, VERTICAL		12	16'-6	852
	10d15-30	COLUMN, VERTICAL		12	16'-5	848
	10d16-30	COLUMN, VERTICAL		12	16'-5	848
	10d17-30	COLUMN, VERTICAL		12	16'-5	848
	10d18-30	COLUMN, VERTICAL		12	16'-5	848
	10d19-30	COLUMN, VERTICAL		48	16'-4	3,374
*	5e1-30	COLUMN TIE		288	7'-10	2,353
	5e5-30	COLUMN TIE - TOP		24	8'-1	202
	5e6-30	COLUMN TIE - BOTTOM		24	7'-11	198
	5f1-30	FOOTING, TOP - TRANSVERSE		54	15'-6	873
	5f2-30	FOOTING, TOP - LONGITUDINAL		48	17'-6	876
	9g1-30	FOOTING, BOTTOM - TRANS.		81	15'-6	4,269
	9g2-30	FOOTING, BOTTOM - LONGIT.		87	17'-6	5,177
	5m1-30	STEP, LONGITUDINAL		20	2'-10	59
	8m2-30	BASE STEP, LONGITUDINAL		5	18'-11	253
	5n1-30	STEP, TRANSVERSE		33	8'-0	275
	* REINFORCING STEEL - NON-COATED - TOTAL (LBS.)					49,462

REINFORCING BAR LIST - PIER 31

NON-COATED BARS

	BAR	LOCATION	SHAPE	NO.	LENGTH	WEIGHT
	9a1-31	CAP, LONGITUDINAL-TOP		22	40'-0	2,992
	9a2-31	CAP, LONGITUDINAL-TOP		22	33'-2	2,481
	5a3-31	CAP, LONGITUDINAL-SIDES		16	33'-10	565
	5a5-31	CAP, ENDS		16	8'-3	138
	8b1-31	CAP, LONGITUDINAL-BOTTOM		36	33'-5	3,212
	5c1-31	CAP, STIRRUP		182	16'-3	3,085
	5c2-31	CAP, STIRRUP-CANTILEVER		4	14'-3	59
	5c3-31	CAP, STIRRUP-CANTILEVER		4	10'-7	44
	7d1-31	COLUMN, VERTICAL TO FOOTING		42	7'-5	637
	7d2-31	COLUMN, VERTICAL TO FOOTING		42	7'-5	637
	7d3-31	COLUMN, VERTICAL TO FOOTING		6	7'-5	91
	7d4-31	COLUMN, VERTICAL TO FOOTING		6	7'-5	91
	7d5-31	COLUMN, VERTICAL TO FOOTING		6	7'-5	91
	7d6-31	COLUMN, VERTICAL TO FOOTING		6	7'-5	91
	7d8-31	COLUMN, VERTICAL TO FOOTING		6	7'-5	91
	7d9-31	COLUMN, VERTICAL TO FOOTING		6	7'-5	91
	7d10-31	COLUMN, VERTICAL TO FOOTING		6	7'-5	91
	7d11-31	COLUMN, VERTICAL TO FOOTING		6	7'-5	91
	7d13-31	COLUMN, VERTICAL		42	18'-8	1,602
	7d14-31	COLUMN, VERTICAL		12	18'-8	458
	7d15-31	COLUMN, VERTICAL		12	18'-7	456
	7d16-31	COLUMN, VERTICAL		12	18'-7	456
	7d17-31	COLUMN, VERTICAL		12	18'-7	456
	7d18-31	COLUMN, VERTICAL		42	18'-6	1,588
*	5e1-31	COLUMN TIE		336	7'-10	2,745
	5e5-31	COLUMN TIE - TOP		24	8'-1	202
	5e6-31	COLUMN TIE - BOTTOM		24	7'-11	198
	5f1-31	FOOTING, TOP - TRANSVERSE		36	11'-6	432
	5f2-31	FOOTING, TOP - LONGITUDINAL		36	11'-6	432
	9g1-31	FOOTING, BOTTOM - TRANS.		54	11'-6	2,111
	9g2-31	FOOTING, BOTTOM - LONGIT.		54	11'-6	2,111
	5m1-31	STEP, LONGITUDINAL		25	2'-10	74
	5n1-31	STEP, TRANSVERSE		20	8'-0	167
	* REINFORCING STEEL - NON-COATED - TOTAL (LBS.)					28,066

NOTE:
DESIGNATION "-27" SIGNIFIES BAR ASSOCIATED WITH PIER 27 OF THE EASTBOUND DESIGN NO. 3408 BRIDGE (TYP.)

* 12 ADDITIONAL 5e1 BARS ARE PROVIDED FOR THE CONTRACTORS USE IF NECESSARY TO MAINTAIN MINIMUM SPACING.

SEE DESIGN SHEET 61 FOR BENT BAR DETAILS.

SEE DESIGN SHEET 65 FOR ESTIMATED QUANTITIES.

whks
engineers + planners + land surveyors

DESIGN FOR VARIABLE SKEW (L.A.)

2271'-6 x VARI. CONTINUOUS WELDED GIRDER BRIDGE-EBL W/14' BIKE TRAIL

138'-10 & 151'-0 7/8 END SPANS MULTIPLE LENGTH INTERIOR SPANS

PIERS 27, 29-31 BAR LISTS

STA. 6792+60.93 - 52' LEFT ℄ I-74 OCTOBER, 2015

SCOTT COUNTY

IOWA DEPARTMENT OF TRANSPORTATION - HIGHWAY DIVISION

DESIGN SHEET NO. 63 OF 282 FILE NO. 30253 DESIGN NO. 3408

BENT BAR DETAILS PIERS 25 & 28

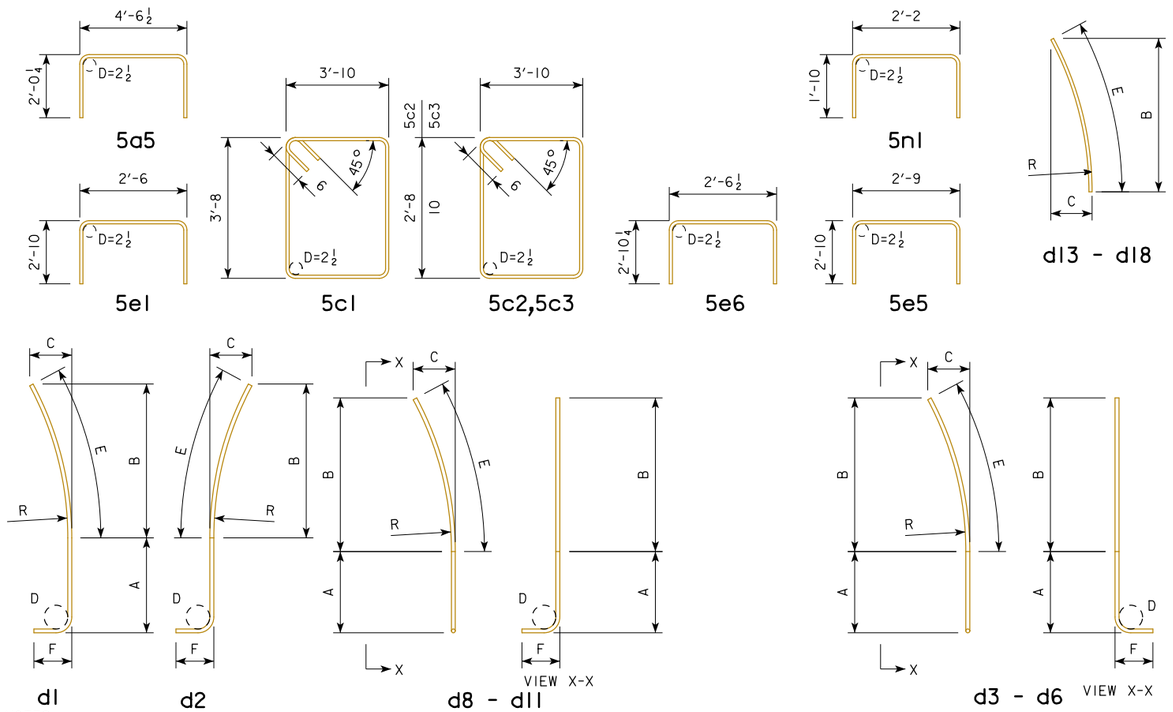

NOTES:
ALL DIMENSIONS ARE OUT TO OUT. D = PIN DIA. SEE TABLES FOR DIMENSIONS OF d1 - d19

FTG. & COLUMN BAR DIM. TABLE PIER 25

BAR	A	B	C	D	E	F	R
7d1-25	11 1/8	6'-11 1/8	8	5 1/4	6'-11 1/2	1'-2	40'-9 5/8
7d2-25	11 1/8	6'-11 1/8	7 5/8	5 1/4	6'-11 1/2	1'-2	43'-1 1/2
7d3-25	11 1/8	6'-11 1/8	7 7/8	5 1/4	6'-11 1/2	1'-2	41'-3 1/4
7d4-25	11 1/8	6'-11 1/8	7 3/4	5 1/4	6'-11 1/2	1'-2	41'-8 3/4
7d5-25	11 1/8	6'-11 1/8	7 3/4	5 1/4	6'-11 1/2	1'-2	42'-2 3/8
7d6-25	11 1/8	6'-11 1/8	7 5/8	5 1/4	6'-11 1/2	1'-2	42'-7 7/8
7d7-25	-	-	-	-	-	-	-
7d8-25	11 1/8	6'-11 1/8	7 7/8	5 1/4	6'-11 1/2	1'-2	41'-3 1/4
7d9-25	11 1/8	6'-11 1/8	7 3/4	5 1/4	6'-11 1/2	1'-2	41'-8 3/4
7d10-25	11 1/8	6'-11 1/8	7 3/4	5 1/4	6'-11 1/2	1'-2	42'-2 3/8
7d11-25	11 1/8	6'-11 1/8	7 5/8	5 1/4	6'-11 1/2	1'-2	42'-7 7/8
7d12-25	-	-	-	-	-	-	-
7d13-25	-	18'-4 1/4	4'-5	-	19'-0 3/8	-	40'-9 5/8
7d14-25	-	18'-4 1/8	4'-4 1/4	-	19'-0 1/8	-	41'-3 1/4
7d15-25	-	18'-4	4'-3 5/8	-	18'-11 3/4	-	41'-8 3/4
7d16-25	-	18'-4	4'-3	-	18'-11 1/2	-	42'-2 3/8
7d17-25	-	18'-3 7/8	4'-2 1/4	-	18'-11 1/4	-	42'-7 7/8
7d18-25	-	18'-3 3/4	4'-1 5/8	-	18'-11	-	43'-1 1/2
7d19-25	-	-	-	-	-	-	-

FTG. & COLUMN BAR DIM. TABLE PIER 28

BAR	A	B	C	D	E	F	R
7d1-28	11 1/8	6'-11 1/8	8	5 1/4	6'-11 1/2	1'-2	40'-9 5/8
7d2-28	11 1/8	6'-11 1/8	7 5/8	5 1/4	6'-11 1/2	1'-2	43'-1 1/2
7d3-28	11 1/8	6'-11 1/8	7 7/8	5 1/4	6'-11 1/2	1'-2	41'-3 1/4
7d4-28	11 1/8	6'-11 1/8	7 3/4	5 1/4	6'-11 1/2	1'-2	41'-8 3/4
7d5-28	11 1/8	6'-11 1/8	7 3/4	5 1/4	6'-11 1/2	1'-2	42'-2 3/8
7d6-28	11 1/8	6'-11 1/8	7 5/8	5 1/4	6'-11 1/2	1'-2	42'-7 7/8
7d7-28	-	-	-	-	-	-	-
7d8-28	11 1/8	6'-11 1/8	7 7/8	5 1/4	6'-11 1/2	1'-2	41'-3 1/4
7d9-28	11 1/8	6'-11 1/8	7 3/4	5 1/4	6'-11 1/2	1'-2	41'-8 3/4
7d10-28	11 1/8	6'-11 1/8	7 3/4	5 1/4	6'-11 1/2	1'-2	42'-2 3/8
7d11-28	11 1/8	6'-11 1/8	7 5/8	5 1/4	6'-11 1/2	1'-2	42'-7 7/8
7d12-28	-	-	-	-	-	-	-
7d13-28	-	18'-4 1/4	4'-5	-	19'-0 3/8	-	40'-9 5/8
7d14-28	-	18'-4 1/8	4'-4 1/4	-	19'-0 1/8	-	41'-3 1/4
7d15-28	-	18'-4	4'-3 5/8	-	18'-11 3/4	-	41'-8 3/4
7d16-28	-	18'-4	4'-3	-	18'-11 1/2	-	42'-2 3/8
7d17-28	-	18'-3 7/8	4'-2 1/4	-	18'-11 1/4	-	42'-7 7/8
7d18-28	-	18'-3 3/4	4'-1 5/8	-	18'-11	-	43'-1 1/2
7d19-28	-	-	-	-	-	-	-

REINFORCING BAR LIST - PIER 25

EPOXY-COATED BARS

	BAR	LOCATION	SHAPE	NO.	LENGTH	WEIGHT
	8a1-25	CAP, LONGITUDINAL-TOP		20	40'-0	2,136
	8a2-25	CAP, LONGITUDINAL-TOP		20	32'-10	1,753
	5a3-25	CAP, LONGITUDINAL-SIDES		16	34'-2	570
	5a5-25	CAP, ENDS		16	8'-7	143
	8b1-25	CAP, LONGITUDINAL-BOTTOM		36	34'-6	3,316
	5c1-25	CAP, STIRRUP		162	16'-0	2,703
	5c2-25	CAP, STIRRUP-CANTILEVER		4	14'-0	58
	5c3-25	CAP, STIRRUP-CANTILEVER		4	10'-4	43
	7d1-25	COLUMN, VERTICAL TO FOOTING		42	9'-1	780
	7d2-25	COLUMN, VERTICAL TO FOOTING		42	9'-1	780
	7d3-25	COLUMN, VERTICAL TO FOOTING		6	9'-1	111
	7d4-25	COLUMN, VERTICAL TO FOOTING		6	9'-1	111
	7d5-25	COLUMN, VERTICAL TO FOOTING		6	9'-1	111
	7d6-25	COLUMN, VERTICAL TO FOOTING		6	9'-1	111
	7d8-25	COLUMN, VERTICAL TO FOOTING		6	9'-1	111
	7d9-25	COLUMN, VERTICAL TO FOOTING		6	9'-1	111
	7d10-25	COLUMN, VERTICAL TO FOOTING		6	9'-1	111
	7d11-25	COLUMN, VERTICAL TO FOOTING		6	9'-1	111
	7d13-25	COLUMN, VERTICAL		42	19'-1	1,638
	7d14-25	COLUMN, VERTICAL		12	19'-1	468
	7d15-25	COLUMN, VERTICAL		12	19'-0	466
	7d16-25	COLUMN, VERTICAL		12	19'-0	466
	7d17-25	COLUMN, VERTICAL		12	19'-0	466
	7d18-25	COLUMN, VERTICAL		42	18'-11	1,624
*	5e1-25	COLUMN TIE		348	8'-2	2,964
	5e5-25	COLUMN TIE - TOP		24	8'-5	211
	5e6-25	COLUMN TIE - BOTTOM		24	8'-3	207
	5m1-25	STEP, LONGITUDINAL		32	2'-10	95
	8m2-25	BASE STEP, LONGITUDINAL		8	18'-11	404
	5n1-25	STEP, TRANSVERSE		66	5'-10	402
		* REINFORCING STEEL - EPOXY-COATED - TOTAL (LBS.)				22,581

REINFORCING BAR LIST - PIER 28

EPOXY-COATED BARS

	BAR	LOCATION	SHAPE	NO.	LENGTH	WEIGHT
	8a1-28	CAP, LONGITUDINAL-TOP		20	40'-0	2,136
	8a2-28	CAP, LONGITUDINAL-TOP		20	32'-10	1,753
	5a3-28	CAP, LONGITUDINAL-SIDES		16	34'-2	570
	5a5-28	CAP, ENDS		16	8'-7	143
	8b1-28	CAP, LONGITUDINAL-BOTTOM		36	34'-6	3,316
	5c1-28	CAP, STIRRUP		162	16'-0	2,703
	5c2-28	CAP, STIRRUP-CANTILEVER		4	14'-0	58
	5c3-28	CAP, STIRRUP-CANTILEVER		4	10'-4	43
	7d1-28	COLUMN, VERTICAL TO FOOTING		42	9'-1	780
	7d2-28	COLUMN, VERTICAL TO FOOTING		42	9'-1	780
	7d3-28	COLUMN, VERTICAL TO FOOTING		6	9'-1	111
	7d4-28	COLUMN, VERTICAL TO FOOTING		6	9'-1	111
	7d5-28	COLUMN, VERTICAL TO FOOTING		6	9'-1	111
	7d6-28	COLUMN, VERTICAL TO FOOTING		6	9'-1	111
	7d8-28	COLUMN, VERTICAL TO FOOTING		6	9'-1	111
	7d9-28	COLUMN, VERTICAL TO FOOTING		6	9'-1	111
	7d10-28	COLUMN, VERTICAL TO FOOTING		6	9'-1	111
	7d11-28	COLUMN, VERTICAL TO FOOTING		6	9'-1	111
	7d13-28	COLUMN, VERTICAL		42	19'-1	1,638
	7d14-28	COLUMN, VERTICAL		12	19'-1	468
	7d15-28	COLUMN, VERTICAL		12	19'-0	466
	7d16-28	COLUMN, VERTICAL		12	19'-0	466
	7d17-28	COLUMN, VERTICAL		12	19'-0	466
	7d18-28	COLUMN, VERTICAL		42	18'-11	1,624
*	5e1-28	COLUMN TIE		348	8'-2	2,964
	5e5-28	COLUMN TIE - TOP		24	8'-5	211
	5e6-28	COLUMN TIE - BOTTOM		24	8'-3	207
	5m1-28	STEP, LONGITUDINAL		32	2'-10	95
	8m2-28	BASE STEP, LONGITUDINAL		8	18'-11	404
	5n1-28	STEP, TRANSVERSE		66	5'-10	402
		* REINFORCING STEEL - EPOXY-COATED - TOTAL (LBS.)				22,581

REINFORCING BAR LIST - PIER 25

NON-COATED BARS

BAR	LOCATION	SHAPE	NO.	LENGTH	WEIGHT
5f1-25	FOOTING, TOP - TRANSVERSE		30	8'-6	266
5f2-25	FOOTING, TOP - LONGITUDINAL		27	9'-6	268
7g1-25	FOOTING, BOTTOM - TRANS.		45	8'-6	782
7g2-25	FOOTING, BOTTOM - LONGIT.		39	9'-6	757
	REINFORCING STEEL - NON-COATED - TOTAL (LBS.)				2,073

REINFORCING BAR LIST - PIER 28

NON-COATED BARS

BAR	LOCATION	SHAPE	NO.	LENGTH	WEIGHT
5f1-28	FOOTING, TOP - TRANSVERSE		30	8'-6	266
5f2-28	FOOTING, TOP - LONGITUDINAL		27	9'-6	268
7g1-28	FOOTING, BOTTOM - TRANS.		45	8'-6	782
7g2-28	FOOTING, BOTTOM - LONGIT.		39	9'-6	757
	REINFORCING STEEL - NON-COATED - TOTAL (LBS.)				2,073

NOTE:
DESIGNATION "-25" SIGNIFIES BAR ASSOCIATED WITH PIER 25 OF THE EASTBOUND DESIGN NO. 3408 BRIDGE (TYP.)

* 12 ADDITIONAL 5e1 BARS ARE PROVIDED FOR THE CONTRACTORS USE IF NECESSARY TO MAINTAIN MINIMUM SPACING.

SEE DESIGN SHEET 65 FOR ESTIMATED QUANTITIES.

whks
engineers + planners + land surveyors

DESIGN FOR VARIABLE SKEW (L.A.)

2271'-6 x VARI. CONTINUOUS WELDED GIRDER BRIDGE-EBL W/14' BIKE TRAIL

138'-10 & 151'-0 7/8 END SPANS MULTIPLE LENGTH INTERIOR SPANS

PIER BAR LISTS AND DETAILS

STA. 6792+60.93 - 52' LEFT ℄ I-74 OCTOBER, 2015

SCOTT COUNTY

IOWA DEPARTMENT OF TRANSPORTATION - HIGHWAY DIVISION

DESIGN SHEET NO. 64 OF 282 FILE NO. 30253 DESIGN NO. 3408

STRUCTURAL CONCRETE (BRIDGE) QUANTITY

LOCATION	QUANTITY									
	PIER 22	PIER 23	PIER 24	PIER 25	PIER 26	PIER 27	PIER 28	PIER 29	PIER 30	PIER 31
CAP (CY)	–	48.5	48.1	–	–	–	–	47.9	47.7	47.0
FOOTING (CY)	63.9	63.6	44.4	39.9	64.5	64.5	39.9	150.0	159.9	63.9
TOTAL STRUCT. CONCRETE (BRIDGE) (CY)	63.9	112.1	92.5	39.9	64.5	64.5	39.9	197.9	207.6	110.9

HIGH PERFORMANCE STRUCTURAL CONCRETE QUANTITY

LOCATION	QUANTITY									
	PIER 22	PIER 23	PIER 24	PIER 25	PIER 26	PIER 27	PIER 28	PIER 29	PIER 30	PIER 31
CAP (CY)	49.1	–	–	52.8	48.0	48.0	53.0	–	–	–
TOTAL HIGH PERF. STRUCTURAL CONCRETE (CY)	49.1	–	–	52.8	48.0	48.0	53.0	–	–	–

HIGH PERFORMANCE SELF-CONSOLIDATING CONCRETE (HP-SCC) QUANTITY

LOCATION	QUANTITY									
	PIER 22	PIER 23	PIER 24	PIER 25	PIER 26	PIER 27	PIER 28	PIER 29	PIER 30	PIER 31
COLUMN (CY)	39.0	26.7	27.3	28.5	33.0	29.4	28.5	24.3	24.3	27.6
TOTAL HIGH PERF. CONCRETE (HP-SCC) (CY)	39.0	26.7	27.3	28.5	33.0	29.4	28.5	24.3	24.3	27.6

ESTIMATED QUANTITIES

ITEM	QUANTITY									
	PIER 22	PIER 23	PIER 24	PIER 25	PIER 26	PIER 27	PIER 28	PIER 29	PIER 30	PIER 31
EXCAVATION, CL 20 (CY)	415	344	28	57	335	82	105	441	470	258
EXCAVATION, CL 22 (CY)	-	-	163	117	18	173	93	-	-	-
STRUCTURAL CONCRETE (BRIDGE) (CY)	63.9	112.1	92.5	39.9	64.5	64.5	39.9	197.9	207.6	110.9
HIGH PERFORMANCE STRUCTURAL CONCRETE (CY)	49.1	-	-	52.8	48.0	48.0	53.0	-	-	-
REINFORCING STEEL (LB)	5086	27400	27011	2073	8838	8838	2073	49075	49462	28066
REINFORCING STEEL, EPOXY COATED (LB)	30848	-	-	22581	45572	43902	22581	-	-	-
PILES, STEEL, HP 14 X 73 (LF)	540	540	-	-	-	-	-	675	1200	1200
TEST PILES (LS)	1	-	-	-	-	-	-	1	1	1
HP SELF-CONSOLIDATING CONCRETE (HP-SCC) (CY)	39.0	26.7	27.3	28.5	33.0	29.4	28.5	24.3	24.3	27.6
CORING (LF)	108	-	-	-	-	-	-	150	180	275
	-	-	-	-	-	-	-	-	-	-

whks
engineers + planners + land surveyors

DESIGN FOR VARIABLE SKEW (L.A.)

2271'-6 x VARI. CONTINUOUS WELDED GIRDER BRIDGE-EBL W/14' BIKE TRAIL

138'-10 & 151'-0 7/8 END SPANS MULTIPLE LENGTH INTERIOR SPANS

PIER QUANTITY SUMMARY

STA. 6792+60.93 - 52' LEFT ℄ I-74 OCTOBER, 2015

SCOTT COUNTY

IOWA DEPARTMENT OF TRANSPORTATION - HIGHWAY DIVISION

DESIGN SHEET NO. 65 OF 282 FILE NO. 30253 DESIGN NO. 3408

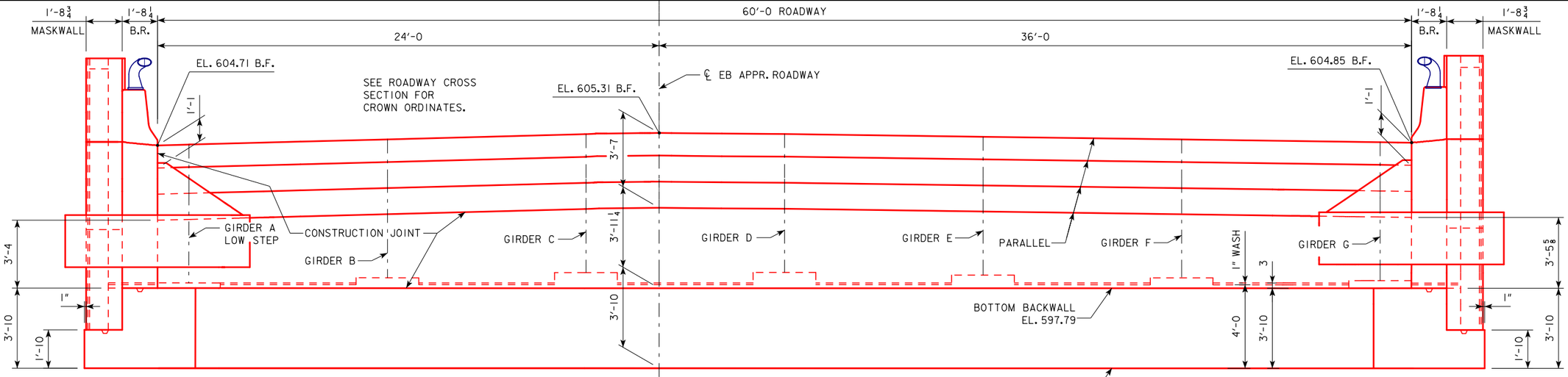

BENCH MARK NO. 500:
STA. 6781+18.92 LT. 161.19'
ELEV. 575.797, CHISELED "X"
IN BOLT E. SIDE
CONCRETE STRUCTURE

REAR ELEVATION

LOOKING DOWNSTATION
PILES NOT SHOWN

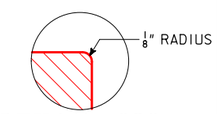

DETAIL "C"

NOTE :
PLACE 5ml AND 5nl BARS UNDER EACH BEAM. FLARE 5ml BARS AND FIELD CUT 5nl BARS TO FIT STEPS AT THE EXTERIOR BEAMS.

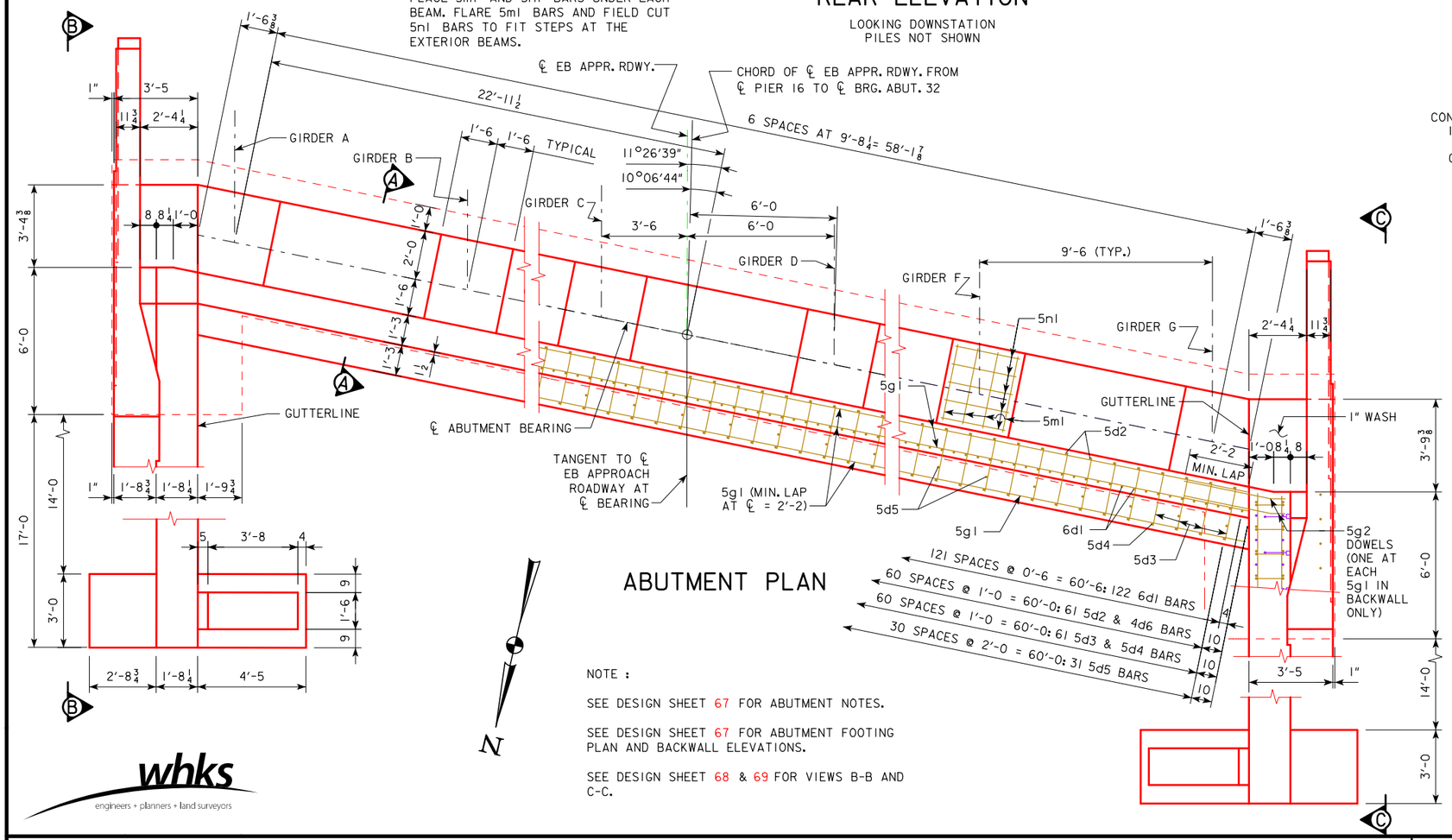

ABUTMENT PLAN

NOTE :

SEE DESIGN SHEET 67 FOR ABUTMENT NOTES.

SEE DESIGN SHEET 67 FOR ABUTMENT FOOTING PLAN AND BACKWALL ELEVATIONS.

SEE DESIGN SHEET 68 & 69 FOR VIEWS B-B AND C-C.

* THIS DIMENSION MAY VARY. TILTING OF THE PAVEMENT SUPPORT SECTION DURING CONSTRUCTION MAY BE NECESSARY TO ACCOMMODATE PROPER SETTING OF THE EXPANSION DEVICE OPENING.

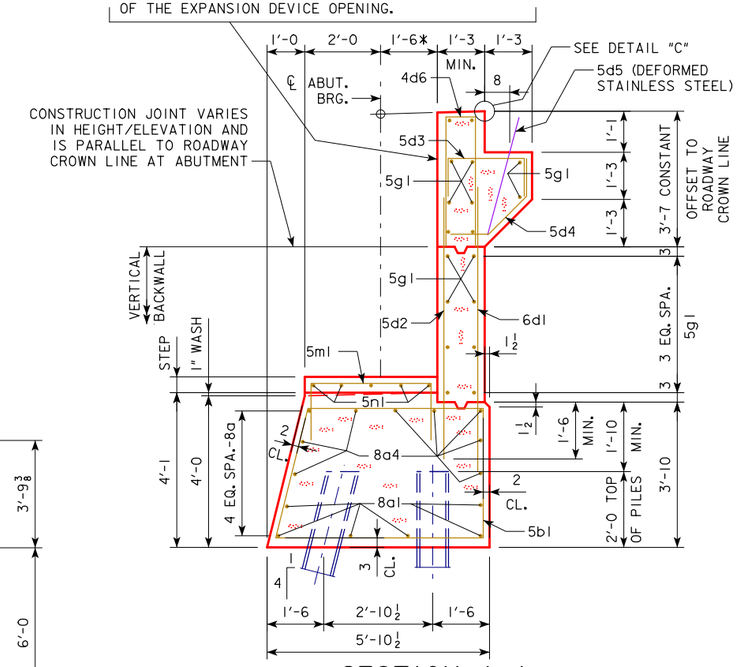

SECTION A-A

EXPANSION DEVICE NOT SHOWN

whks
engineers + planners + land surveyors

DESIGN FOR VARIABLE SKEW (L.A.)

2271'-6 x VARI. CONTINUOUS WELDED GIRDER BRIDGE-EBL W/14' BIKE TRAIL

138'-10 & 151'-0 7/8 END SPANS MULTIPLE LENGTH INTERIOR SPANS

ABUTMENT NO. 32 DETAILS

STA. 6792+60.93 - 52' LEFT ℄ I-74 OCTOBER, 2015

SCOTT COUNTY

IOWA DEPARTMENT OF TRANSPORTATION - HIGHWAY DIVISION

DESIGN SHEET NO. 66 OF 282 FILE NO. 30253 DESIGN NO. 3408

BENCH MARK NO. 500: STA. 6781+18.92 LT. 161.19'
ELEV. 575.797, CHISELED "X" IN BOLT E. SIDE
CONCRETE STRUCTURE

TABLE OF DIMENSIONS & ELEVATIONS

LOCATION	STEP HEIGHT DIMENSION ✳	STEP ELEVATION ✳
GIRDER A (LOW STEP)	0	598.04
GIRDER B	3 1/4	598.31
GIRDER C	6 1/4	598.56
GIRDER D	6 3/8	598.57
GIRDER E	4 3/4	598.44
GIRDER F	3 1/4	598.31
GIRDER G	1 1/2	598.16

✳ ELEVATIONS AND STEP HEIGHTS ARE DEPENDANT ON FINAL BEARING HEIGHT AND SHALL BE VERIFIED BY BEARING MANUFACTURER.

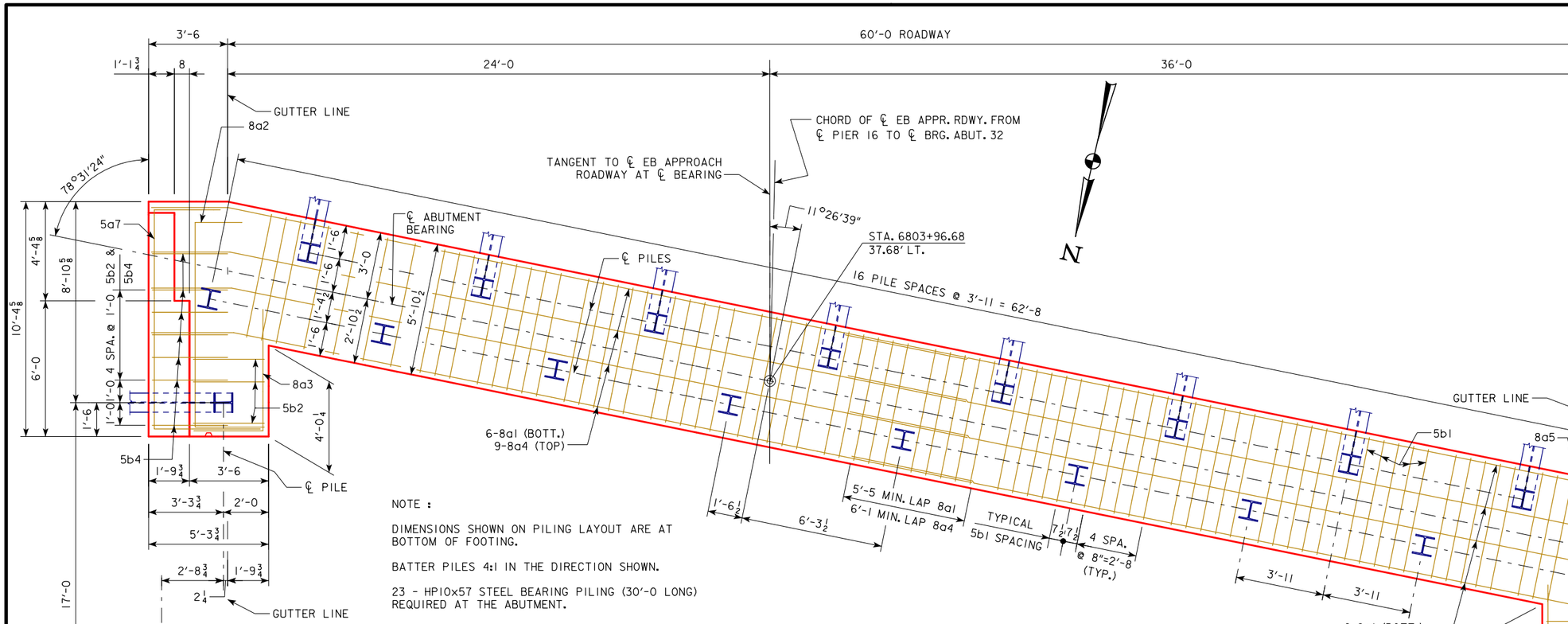

NOTE :

DIMENSIONS SHOWN ON PILING LAYOUT ARE AT BOTTOM OF FOOTING.

BATTER PILES 4:1 IN THE DIRECTION SHOWN.

23 - HP10x57 STEEL BEARING PILING (30'-0 LONG) REQUIRED AT THE ABUTMENT.

ABUTMENT FOOTING PLAN

ABUTMENT NOTES:

TO ALLOW FOR EMBANKMENT SETTLEMENT, PILE DRIVING AT THE ABUTMENT SHOULD COMMENCE AT LEAST 7 DAYS AFTER EMBANKMENT CONSTRUCTION.

MINIMUM CLEAR DISTANCE FROM FACE OF CONCRETE TO NEAR REINFORCING BAR IS TO BE 2" UNLESS OTHERWISE NOTED OR SHOWN.

CONSTRUCTION JOINT KEYWAYS ARE TO BE FORMED WITH BEVELED 2x8's.

THE PORTION OF THE BACKWALL CONTAINING THE ABUTMENT ANCHORAGE OF THE EXPANSION DEVICE IS TO BE PLACED AFTER THE BRIDGE FLOOR IS PLACED.

PAVING NOTCH DOWELS SHALL BE DEFORMED BAR GRADE 60, TYPE 316 LN IN ACCORDANCE WITH ASTM A955/A955M-01.

STEEL PILE POINTS ARE REQUIRED FOR THE STEEL H-PILES AT THE ABUTMENT.

CONCRETE SEALER SHALL BE APPLIED TO THE ABUTMENT BRIDGE SEAT IN ACCORDANCE WITH ARTICLE 2403.03, P, 3 OF THE STANDARD SPECIFICATIONS. IN ADDITION TO THE REQUIREMENTS OF ARTICLE 2403.03, P, 3, SEALER SHALL BE APPLIED TO THE WASH BETWEEN THE BRIDGE SEAT STEPS.

BEAMS AND MASONRY PLATES ARE TO BE SET BEFORE BACKWALL IS PLACED.

THE COST OF PREFORMED EXPANSION JOINT FILLER, FLOODABLE BACKFILL, POROUS BACKFILL, AND COST OF FURNISHING AND PLACING CONCRETE SEALER IS TO BE INCLUDED IN THE PRICE BID FOR "HIGH PERFORMANCE STRUCTURAL CONCRETE".

IF NECESSARY TO PREVENT DAMAGE TO THE END OF THE BRIDGE DECK OR BACKWALL FROM CONSTRUCTION EQUIPMENT, AN APPROPRIATE METHOD OF PROTECTION APPROVED BY THE ENGINEER SHALL BE PROVIDED BY THE BRIDGE CONTRACTOR AT NO EXTRA COST TO THE STATE.

THE JOINT SEALER SHALL BE LIGHT GRAY NONSAG LATEX CAULKING SEALER FOR OUTDOOR USE. NO TESTING OR CERTIFICATION IS REQUIRED. COST OF THE JOINT SEALER AND BOND BREAKER SHALL BE CONSIDERED INCIDENTAL TO OTHER CONSTRUCTION

THE CONTRACT LENGTH OF 30 FEET FOR THE ABUTMENT PILES IS BASED ON A MIXED SOIL CLASSIFICATION, A TOTAL FACTORED AXIAL LOAD PER PILE (PU) OF 180 KIPS, AND A GEOTECHNICAL RESISTANCE FACTOR (PHI) OF 0.65 FOR SOIL AND 0.7 FOR ROCK END BEARING.

THE NOMINAL AXIAL BEARING RESISTANCE FOR CONSTRUCTION CONTROL WAS DETERMINED FROM A MIXED SOIL CLASSIFICATION AND A GEOTECHNICAL RESISTANCE FACTOR (PHI) OF 0.65 FOR SOIL AND 0.7 FOR ROCK END BEARING. PILES ARE ASSUMED TO BE DRIVEN FROM A START ELEVATION AT THE BOTTOM OF FOOTING.

THE REQUIRED NOMINAL AXIAL BEARING RESISTANCE FOR ABUTMENT PILES IS 129 TONS AT END OF DRIVE OR RETAP. THE PILE CONTRACT LENGTH SHALL BE DRIVEN AS PER PLAN UNLESS PILES REACH REFUSAL.

whks
engineers + planners + land surveyors

DESIGN FOR VARIABLE SKEW (L.A.)

2271'-6 x VARI. CONTINUOUS WELDED GIRDER BRIDGE-EBL W/14' BIKE TRAIL

138'-10 & 151'-0 7/8 END SPANS MULTIPLE LENGTH INTERIOR SPANS

ABUTMENT NO. 32 DETAILS

STA. 6792+60.93 - 52' LEFT ℄ I-74 OCTOBER, 2015

SCOTT COUNTY

IOWA DEPARTMENT OF TRANSPORTATION - HIGHWAY DIVISION

DESIGN SHEET NO. 67 OF 282 FILE NO. 30253 DESIGN NO. 3408

BENCH MARK NO. 500: STA. 6781+18.92 LT. 161.19'
ELEV. 575.797, CHISELED "X" IN BOLT E. SIDE
CONCRETE STRUCTURE

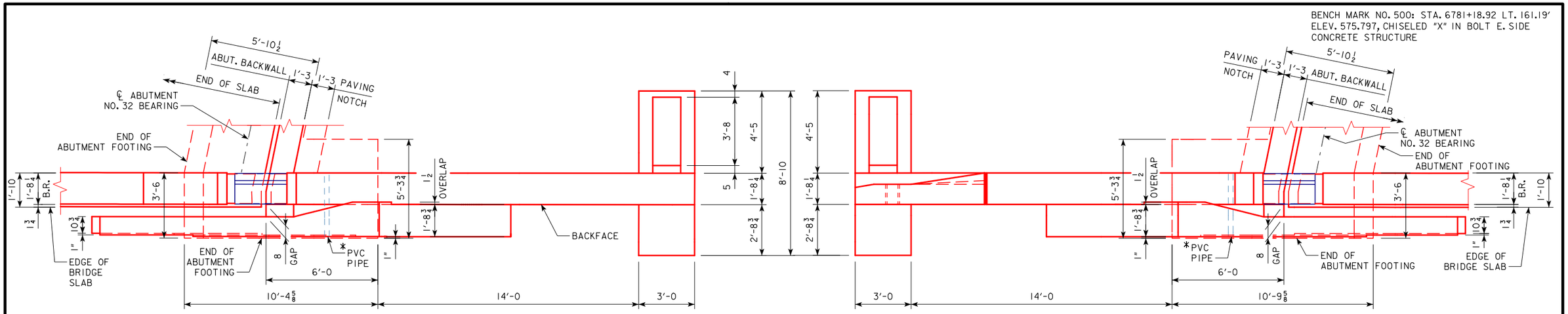

NORTHEAST WING PLAN

NORTHWEST WING PLAN

*SEE DESIGN SHEET 151, PART PLAN & LONGIT. SECTION, FOR PVC PIPE LOCATION

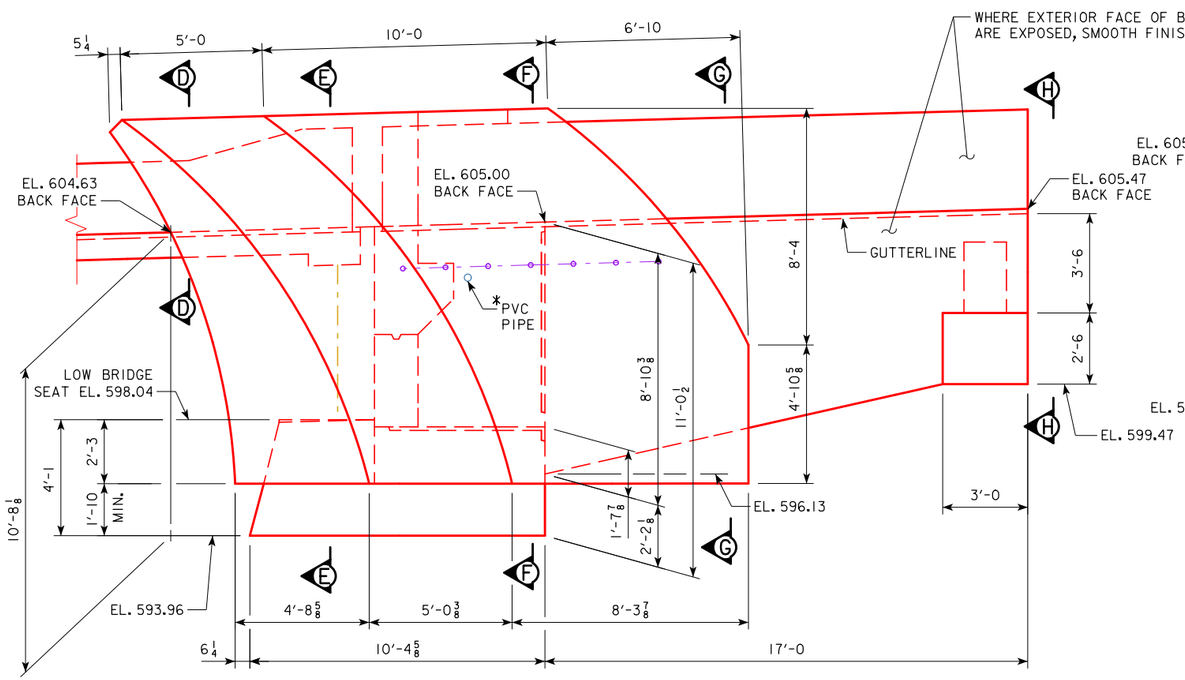

VIEW B-B

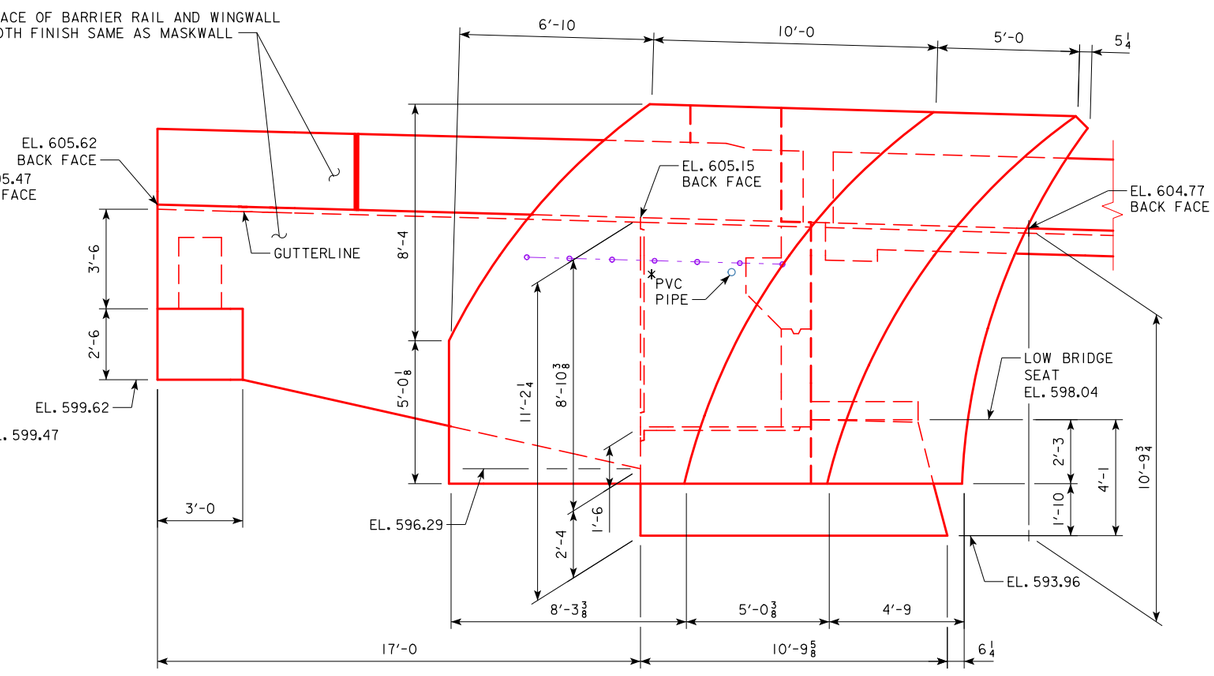

VIEW C-C

NOTES:

STEEL RAIL NOT SHOWN.

FOR LOCATIONS OF VIEWS B-B & C-C, SEE DESIGN SHEET 66.

SEE DESIGN SHEET 67 FOR ABUTMENT NOTES.

SEE DESIGN SHEET 72 FOR SECTIONS D-D, E-E, F-F, G-G & VIEW H-H.

whks
engineers + planners + land surveyors

DESIGN FOR VARIABLE SKEW (L.A.)

227'-6 x VARI. CONTINUOUS WELDED GIRDER BRIDGE-EBL W/14' BIKE TRAIL

138'-10 & 151'-0⅞ END SPANS MULTIPLE LENGTH INTERIOR SPANS

ABUTMENT WING DETAILS

STA. 6792+60.93 - 52' LEFT ℄ I-74 OCTOBER, 2015

SCOTT COUNTY

IOWA DEPARTMENT OF TRANSPORTATION - HIGHWAY DIVISION

DESIGN SHEET NO. 68 OF 282 FILE NO. 30253 DESIGN NO. 3408

* BARRIER RAIL, END SECTION, AND MASKWALL BARS TO BE PLACED WITH ABUTMENT WING.

SEE BARRIER RAIL AND END SECTION DETAILS IN THESE PLANS FOR DETAILS OF BARRIER RAIL AND END SECTION. REINFORCING BARS 5c4, 5c11, 5c12, 6c3, 6c4, 5c5-10, 6d2 & 4t1 ARE INCLUDED IN THE SUPERSTRUCTURE QUANTITIES.

** SEE DESIGN SHEET 151, PART PLAN & LONGIT. SECTION, FOR PVC PIPE LOCATION

BENCH MARK NO. 500: STA. 6781+18.92 LT. 161.19'
ELEV. 575.797, CHISELED "X" IN BOLT E. SIDE CONCRETE STRUCTURE

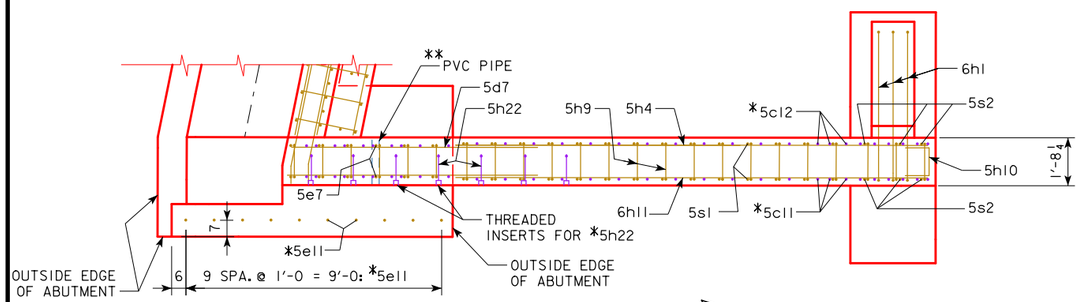

NORTHEAST WING PLAN

BARRIER RAIL REINFORCING NOT SHOWN.
MASKWALL NOT SHOWN.

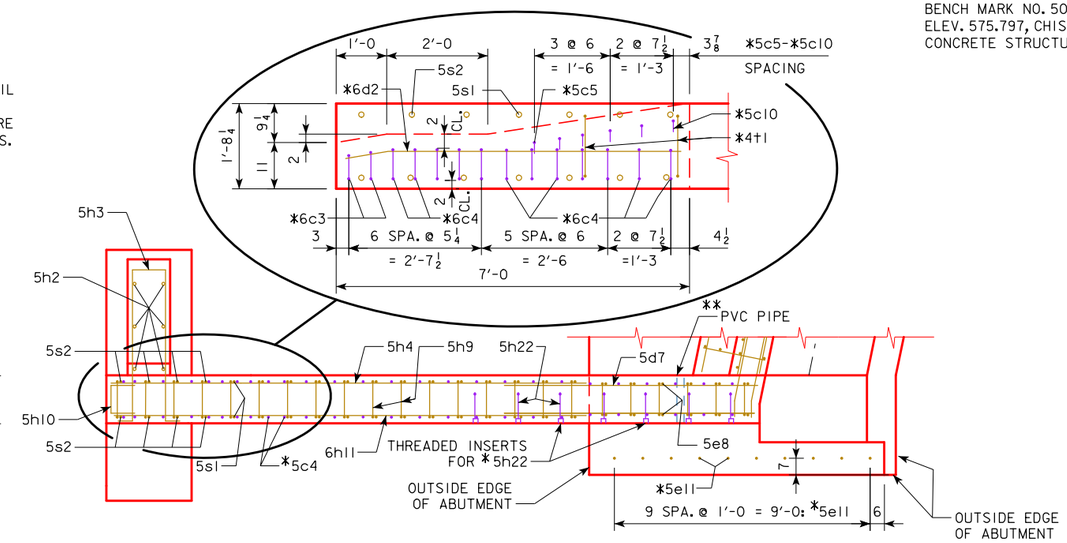

NORTHWEST WING PLAN

MASKWALL NOT SHOWN.

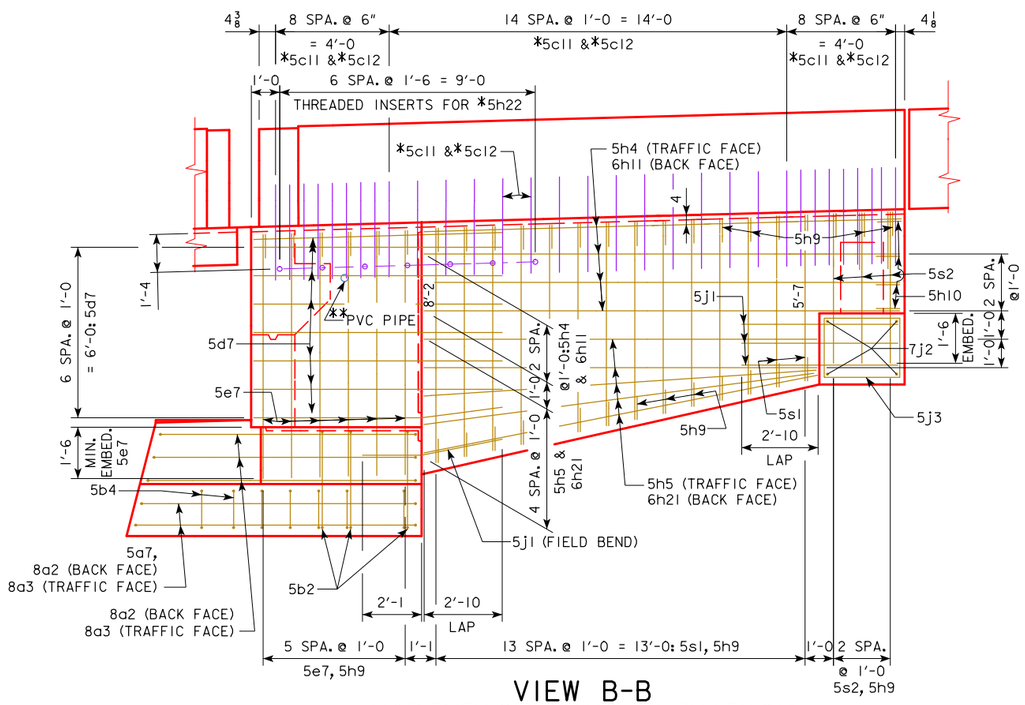

VIEW B-B
NORTHEAST WING ELEVATION

MASKWALL NOT SHOWN.
PILES NOT SHOWN.

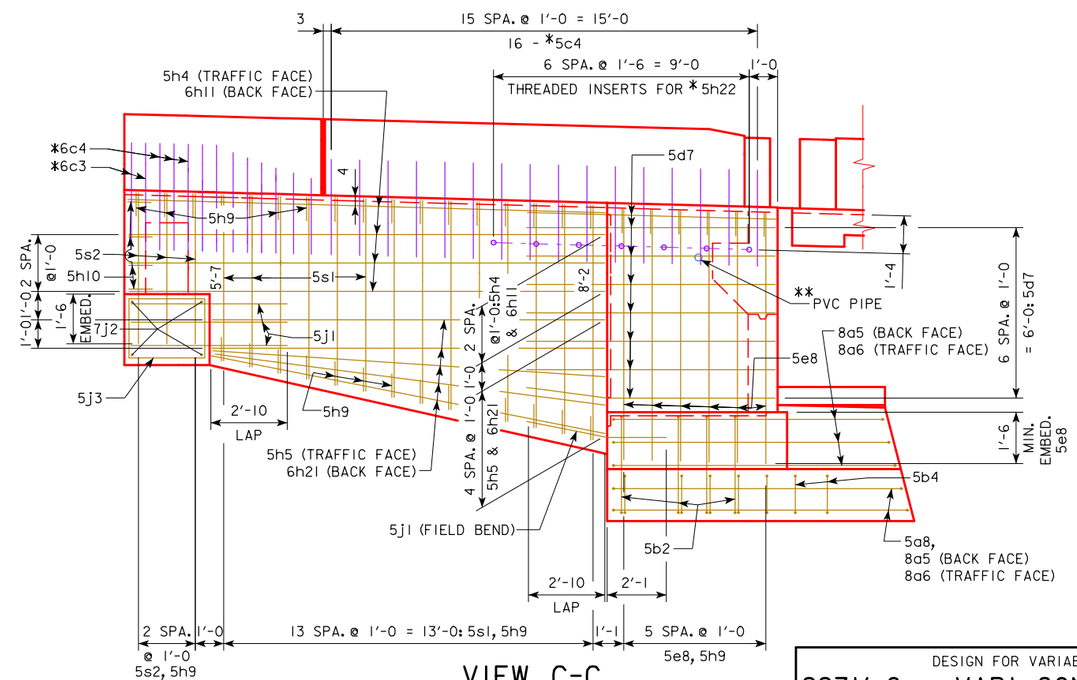

VIEW C-C
NORTHWEST WING ELEVATION

MASKWALL NOT SHOWN.
PILES NOT SHOWN.

NOTES:

FOR LOCATIONS OF VIEWS B-B & C-C, SEE DESIGN SHEET 66.

SEE DESIGN SHEET 67 FOR ABUTMENT NOTES.

SEE MASKWALL DETAILS IN THESE PLANS FOR DETAILS OF MASKWALL.

whks engineers + planners + land surveyors

DESIGN FOR VARIABLE SKEW (L.A.)

2271'-6 x VARI. CONTINUOUS WELDED GIRDER BRIDGE-EBL W/14' BIKE TRAIL

138'-10 & 151'-0 7/8 END SPANS MULTIPLE LENGTH INTERIOR SPANS

ABUTMENT WING DETAILS

STA. 6792+60.93 - 52' LEFT ℄ I-74 OCTOBER, 2015

SCOTT COUNTY

IOWA DEPARTMENT OF TRANSPORTATION - HIGHWAY DIVISION

DESIGN SHEET NO. 69 OF 282 FILE NO. 30253 DESIGN NO. 3408

DESIGN TEAM JZ / LG / RE	SCOTT COUNTY	PROJECT NUMBER BRFIM-074-1(200)5--05-82	SHEET NUMBER 70

BENCH MARK NO. 500: STA. 6781+18.92 LT. 161.19'
ELEV. 575.797, CHISELED "X" IN BOLT E. SIDE
CONCRETE STRUCTURE

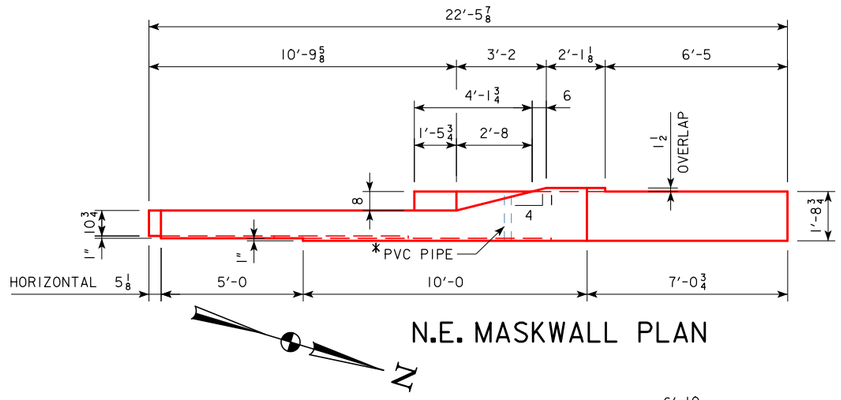

N.E. MASKWALL PLAN

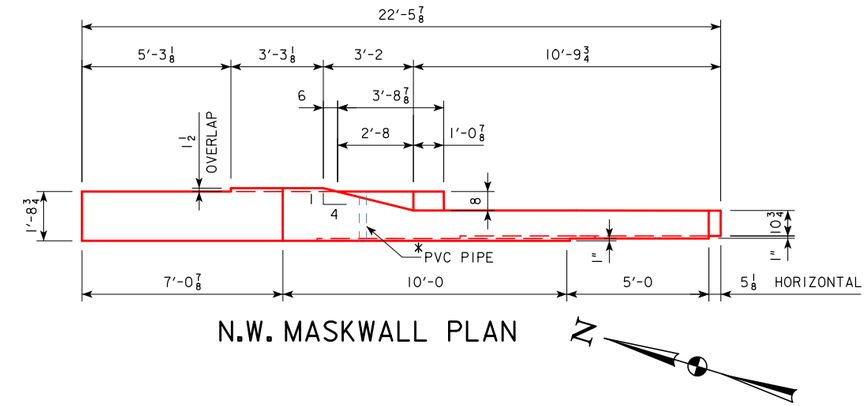

N.W. MASKWALL PLAN

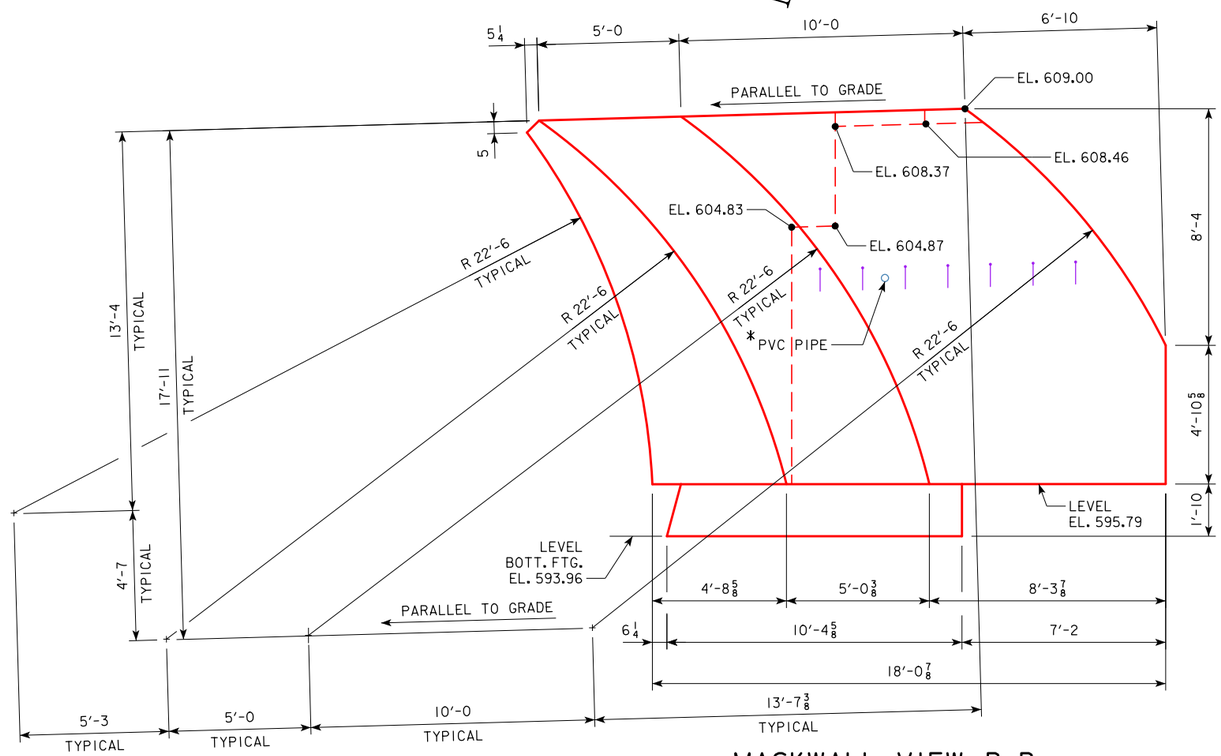

MASKWALL VIEW B-B

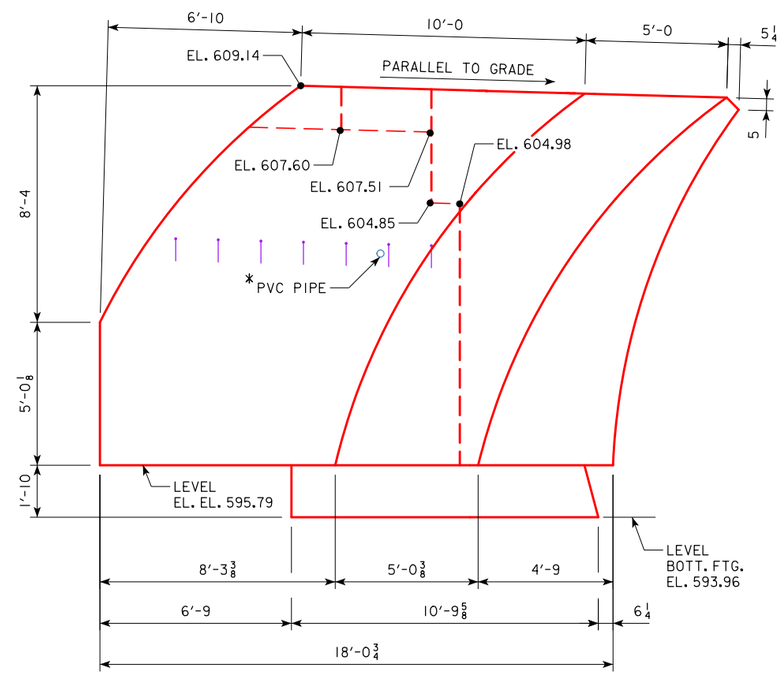

MASKWALL VIEW C-C

NOTE :

SEE DESIGN SHEET 67 FOR ABUTMENT NOTES.

SEE DESIGN SHEET 66 FOR LOCATIONS OF VIEWS B-B & C-C.

*SEE DESIGN SHEET 151, PART PLAN & LONGIT. SECTION, FOR PVC PIPE LOCATION

whks
engineers + planners + land surveyors

DESIGN FOR VARIABLE SKEW (L.A.)

2271'-6 x VARI. CONTINUOUS WELDED GIRDER BRIDGE-EBL W/14' BIKE TRAIL

138'-10 & 151'-0 7/8 END SPANS MULTIPLE LENGTH INTERIOR SPANS

MASKWALL DETAILS

STA. 6792+60.93 - 52' LEFT ℄ I-74 OCTOBER, 2015

SCOTT COUNTY

IOWA DEPARTMENT OF TRANSPORTATION - HIGHWAY DIVISION

DESIGN SHEET NO. 70 OF 282 FILE NO. 30253 DESIGN NO. 3408

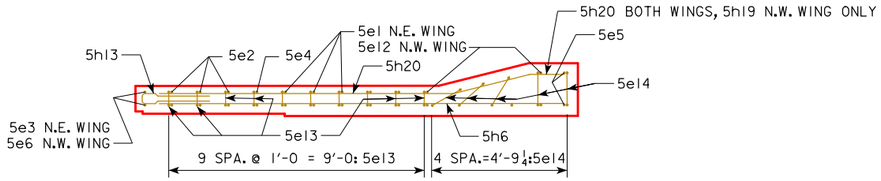

SECTION J-J

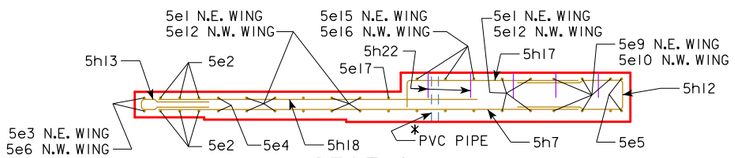

SECTION K-K

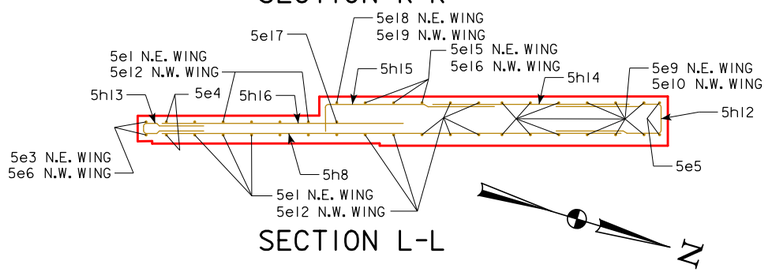

SECTION L-L

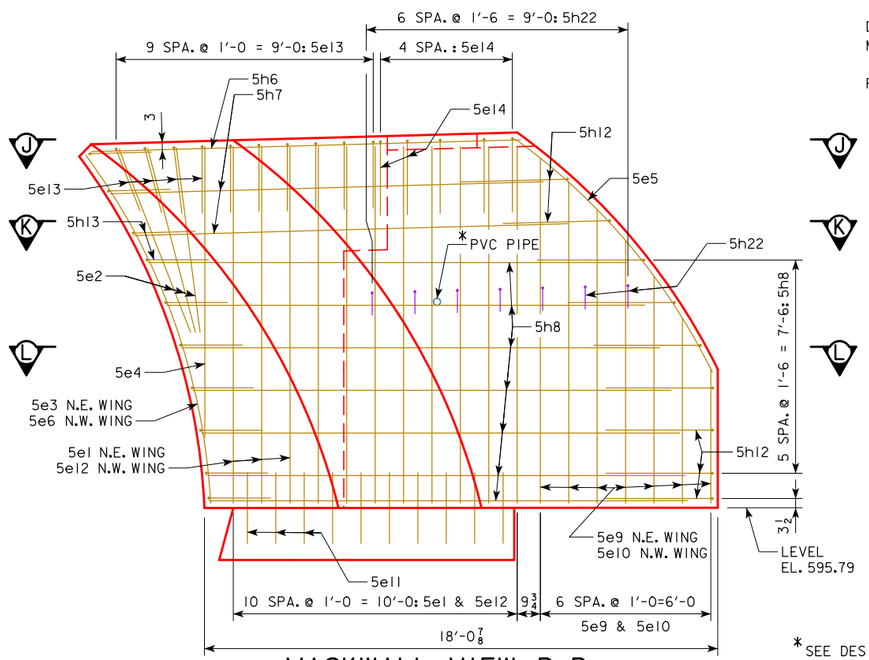

MASKWALL VIEW B-B
BACK FACE REINFORCING SHOWN

*SEE DESIGN SHEET 151, PART PLAN & LONGIT. SECTION, FOR PVC PIPE LOCATION

MASKWALL CONCRETE FINISH NOTES:

IF FORM TIES ARE USED IN FORMING THE MASKWALL, ARRANGE TIES TO BE REGULARLY SPACED AND IN A CONSISTENT GEOMETRIC GRID PATTERN. DO NOT LOCATE TIES AT EDGES OF CONCRETE RUSTICATIONS.

FOLLOWING FORM REMOVAL, A CLASS 2 STRIP DOWN SURFACE FINISH IN ACCORDANCE WITH ARTICLE 2403, P, 2, B, OF THE STANDARD SPECIFICATIONS SHALL BE REQUIRED BUT WITH THE FOLLOWING ADDITIONAL REQUIREMENTS:

1. DEMONSTRATE HOLE AND VOID PATCHING OPERATIONS IN ACCORDANCE WITH ARTICLE 2403, P, 2, B, OF THE STANDARD SPECIFICATIONS ON A FOUR FOOT SECTION OF VERTICAL MASKWALL LOCATED IN AN INCONSPICUOUS AREA. BEGIN PATCHING DEMONSTRATION BY USING A MORTAR MIX COMPRISED OF 1 PART WHITE CEMENT, 2 PARTS STANDARD PORTLAND CEMENT, 6 PARTS MORTAR SAND, AND WATER. THE QUANTITY OF WATER USED SHALL PRODUCE A MORTAR CONSISTENCY AS DRY AS POSSIBLE TO USE EFFECTIVELY.

2. WHEN PATCHING TEST AREAS HAVE SET, SATURATE WITH WATER AND RUB WITH A FINE CARBORUNDUM STONE UNTIL SURFACES ARE SMOOTH IN TEXTURE. REMOVE LOOSE POWDER AND OTHER CONTAMINANTS BY RUBBING WITH BURLAP AND RINSING WITH WATER. AFTER SURFACES HAVE DRIED, PATCH COLOR AND TEXTURE OF SURFACES WILL BE REVIEWED BY THE ENGINEER. PATCHES SHOULD MATCH OR BE SLIGHTLY LIGHTER THAN SURROUNDING CONCRETE. IF RESULTS ARE UNSATISFACTORY, ADJUST PATCHING MORTAR MIX PROPORTIONS AND PERFORM ANOTHER DEMONSTRATION UNTIL RESULTS ARE DEEMED SATISFACTORY BY THE ENGINEER.

3. USE THE PATCHING MORTAR MIX PROPORTIONS THAT ARE APPROVED BY THE ENGINEER AS A RESULT OF THE SATISFACTORY DEMONSTRATION. DO NOT USE PATCHING MORTAR THAT IS MORE THAN 1 HOUR OLD.

FINISHED MASKWALL CONCRETE SHALL BE SMOOTH AND SHOW NO WOOD GRAIN OR OTHER TEXTURE FROM THE FACE OF THE FORMS USED. ALL COSTS FOR REPAIR OR COVERING WOOD GRAIN OR OTHER TEXTURES ON THESE SURFACES SHALL BE THE RESPONSIBILITY OF THE CONTRACTOR.

DO NOT APPLY CURING COMPOUNDS, SEALERS, OR OTHER COATINGS TO THE FINISHED MASKWALLS EXCEPT AS NOTED IN THESE PLANS.

FOR DETAILS AND APPLICATION LIMITS OF ANTI-GRAFFITI COATING SEE DESIGN SHEET 282.

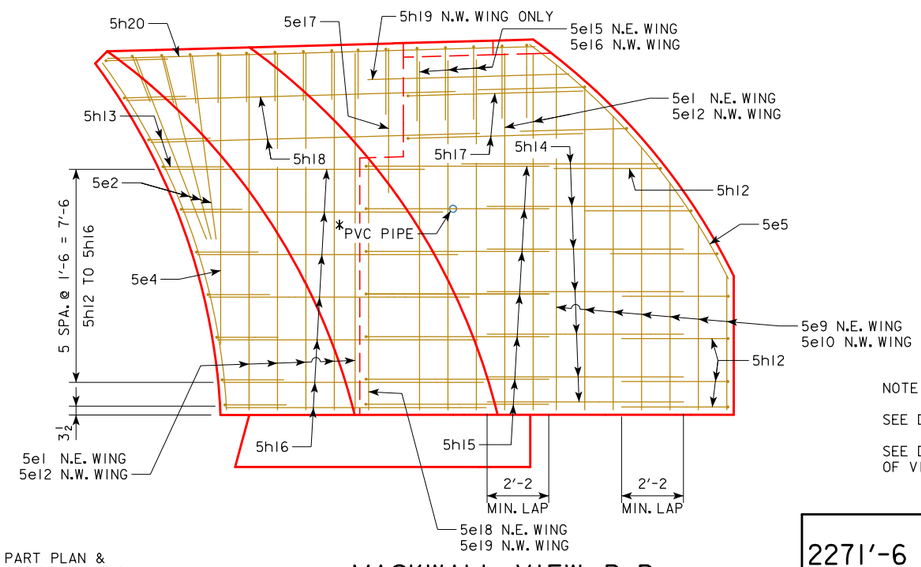

MASKWALL VIEW B-B
TRAFFIC FACE REINFORCING SHOWN

BENCH MARK NO. 500: STA. 6781+18.92 LT. 161.19'
ELEV. 575.797, CHISELED "X" IN BOLT E. SIDE
CONCRETE STRUCTURE

MASKWALL CONSTRUCTION SEQUENCE NOTE:

CONTRACTOR SHALL EXERCISE ALL DUE CARE TO ASSURE THAT THE MASKWALL SURFACE FINISH IS INTACT AND THE OVERALL APPEARANCE IS AESTHETICALLY PLEASING AT COMPLETION OF THE PROJECT. IF THE MASKWALLS ARE CONSTRUCTED BEFORE THE DECK, APPROACH SLAB OR BARRIER RAILINGS, ADDITIONAL EFFORT MAY BE REQUIRED IN FORMING AND PLACING THE DECK, APPROACH SLAB AND/OR BARRIER CONCRETE, AND PRECAUTIONS SHALL BE TAKEN TO PROTECT THE MASKWALLS DURING THESE OPERATIONS. IF THE MASKWALLS ARE CONSTRUCTED AFTER DECK, APPROACH SLAB OR BARRIER RAILINGS, TEMPORARY EARTH RETENTION MAY BE REQUIRED. IN EITHER CASE, ANY COSTS FOR PROTECTING THE MASKWALLS, WORKING AROUND THEM OR TEMPORARY EARTH RETENTION AND FINAL GRADING SHALL BE INCLUDED IN THE COST OF HIGH PERFORMANCE STRUCTURAL CONCRETE.

NOTE :

SEE DESIGN SHEET 67 FOR ABUTMENT NOTES.

SEE DESIGN SHEET 66 FOR LOCATIONS OF VIEWS B-B & C-C.

N.E. MASKWALL (VIEW B-B) SHOWN - N.W. MASKWALL (VIEW C-C) SIMILAR

5e9 @ N.E. WING - VARIES 4'-8 TO 12'-2 - 2 SETS OF 7 BARS
5e10 @ N.W. WING - VARIES 4'-9 TO 12'-3 - 2 SETS OF 7 BARS

whks
engineers + planners + land surveyors

DESIGN FOR VARIABLE SKEW (L.A.)

2271'-6 x VARI. CONTINUOUS WELDED GIRDER BRIDGE-EBL W/14' BIKE TRAIL

138'-10 & 151'-0⅞ END SPANS MULTIPLE LENGTH INTERIOR SPANS

MASKWALL DETAILS

STA. 6792+60.93 - 52' LEFT ℄ I-74 OCTOBER, 2015

SCOTT COUNTY

IOWA DEPARTMENT OF TRANSPORTATION - HIGHWAY DIVISION

DESIGN SHEET NO. 71 OF 282 FILE NO. 30253 DESIGN NO. 3408

BENCH MARK NO. 500: STA. 6781+18.92 LT. 161.19'
ELEV. 575.797, CHISELED "X" IN BOLT E. SIDE
CONCRETE STRUCTURE

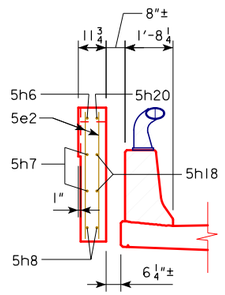

SECTION D-D

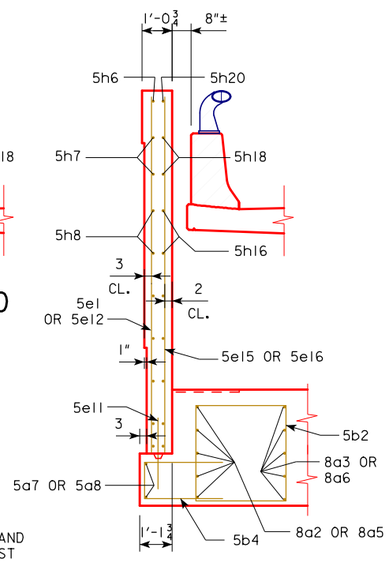

SECTION E-E

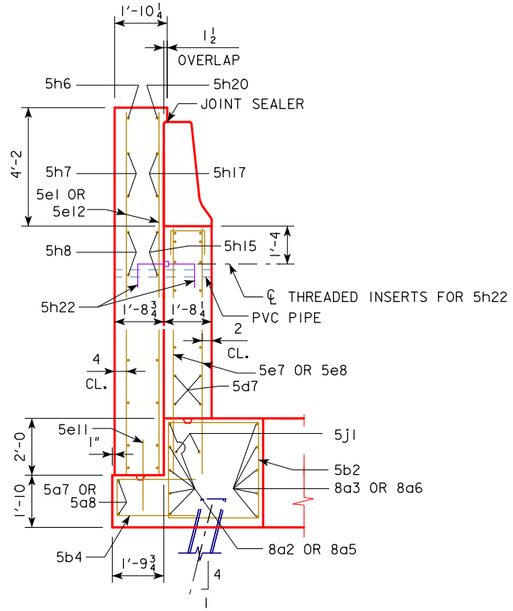

SECTION F-F

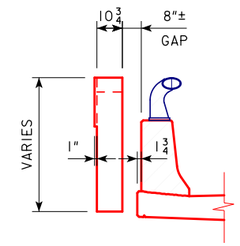

SECTION D-D

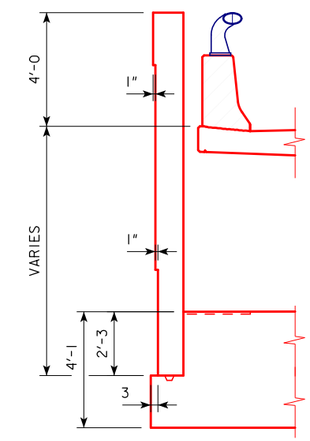

SECTION E-E

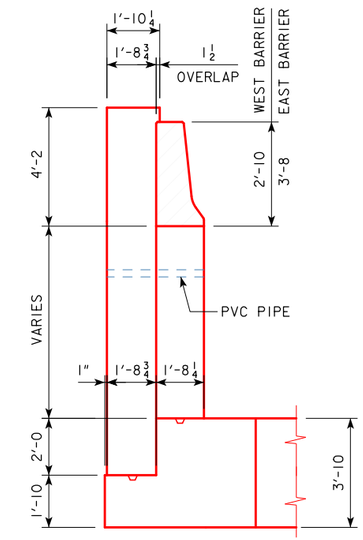

SECTION F-F

NOTE:

REINFORCING IN SECTIONS AND VIEWS SHOWN FOR NORTHEAST WING. NORTHWEST WING REINFORCING SIMILAR.

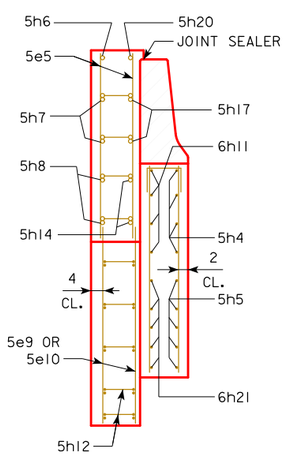

SECTION G-G

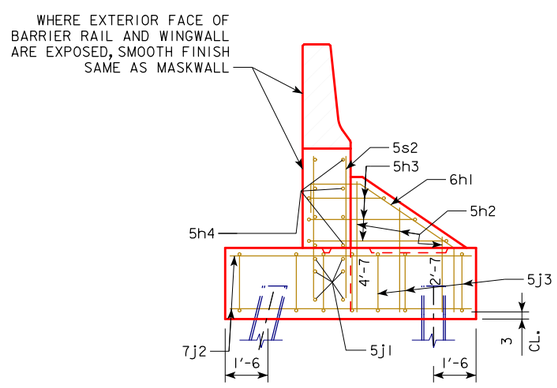

VIEW H-H

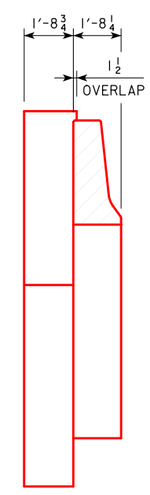

SECTION G-G

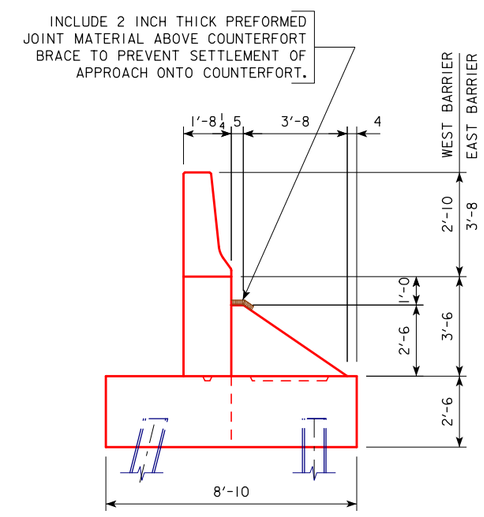

VIEW H-H
MASKWALL NOT SHOWN

NOTE :

SEE DESIGN SHEET 67 FOR ABUTMENT NOTES.

SEE DESIGN SHEET 68 FOR LOCATIONS OF SECTIONS D-D, E-E, F-F, G-G & VIEW H-H.

whks
engineers + planners + land surveyors

DESIGN FOR VARIABLE SKEW (L.A.)

2271'-6 x VARI. CONTINUOUS WELDED GIRDER BRIDGE-EBL W/14' BIKE TRAIL

138'-10 & 151'-0⅞ END SPANS MULTIPLE LENGTH INTERIOR SPANS

WING AND MASKWALL DETAILS

STA. 6792+60.93 - 52' LEFT ℄ I-74 OCTOBER, 2015

SCOTT COUNTY

IOWA DEPARTMENT OF TRANSPORTATION - HIGHWAY DIVISION

DESIGN SHEET NO. 72 OF 282 FILE NO. 30253 DESIGN NO. 3408

BENT BAR DETAILS

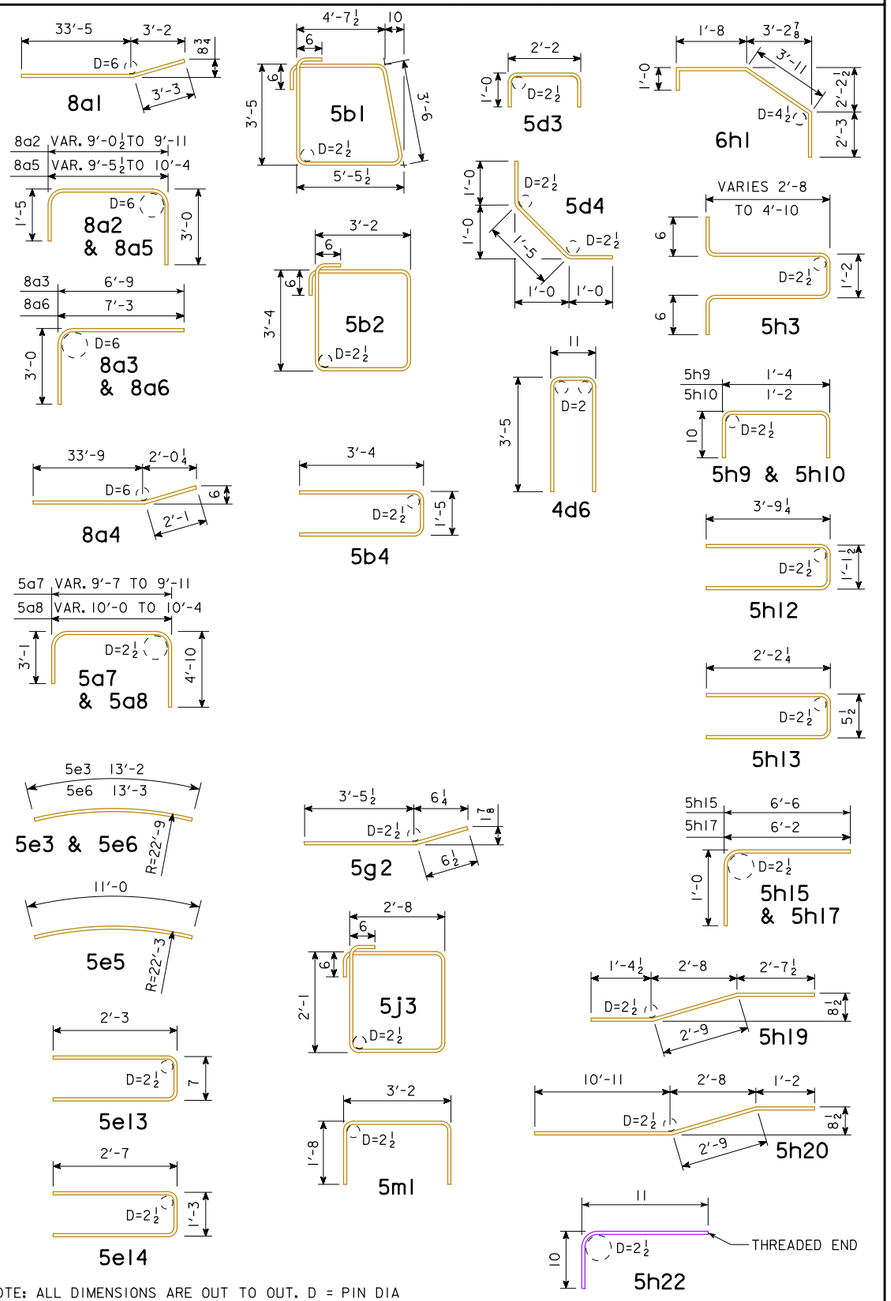

NOTE: ALL DIMENSIONS ARE OUT TO OUT. D = PIN DIA

REINFORCING BAR LIST-ONE ABUT.-(CONTIN.)

	BAR	LOCATION	SHAPE	NO.	LENGTH	WEIGHT
EPOXY COATED BARS - (CONTINUED)	5g1-32	BACKWALL & PAVING NOTCH, LONGIT.		36	31'-8	1,189
	5g2-32	BACKWALL DOWELS		32	4'-0	134
	6h1-32	COUNTERFORT, VERTICAL		6	8'-10	80
	5h2-32	COUNTERFORT, VERTICAL		12	VARIES	45
	5h3-32	COUNTERFORT, HORIZ.		6	VARIES	60
	5h4-32	WINGWALL, HORIZONTAL, TRAFFIC FACE		8	16'-9	140
	5h5-32	WINGWALL, HORIZONTAL, TRAFFIC FACE		10	13'-10	144
	5h6-32	MASKWALL, HORIZONTAL, B.F., TOP		2	14'-10	31
	5h7-32	MASKWALL, HORIZONTAL, B.F.		4	15'-3	64
	5h8-32	MASKWALL, HORIZONTAL, B.F.		14	16'-10	246
	5h9-32	WINGWALL, HORIZONTAL		74	3'-0	232
	5h10-32	END WINGWALL, HORIZONTAL		8	2'-10	24
	6h11-32	WINGWALL, HORIZONTAL, BACK FACE		8	16'-9	201
	5h12-32	MASKWALL, HORIZ.. END		18	8'-8	163
	5h13-32	MASKWALL, HORIZ.. END		20	4'-10	101
	5h14-32	MASKWALL, HORIZ., TRAFFIC FACE		14	6'-11	101
	5h15-32	MASKWALL, HORIZ., TRAFFIC FACE		14	7'-6	110
	5h16-32	MASKWALL, HORIZ., TRAFFIC FACE		14	9'-2	134
	5h17-32	MASKWALL, HORIZ., TRAFFIC FACE		4	7'-2	30
	5h18-32	MASKWALL, HORIZ., TRAFFIC FACE		4	11'-7	48
	5h19-32	MASKWALL, HORIZ., TRAFFIC FACE, N.W.		1	6'-9	7
	5h20-32	MASKWALL, HORIZ., TRAFFIC FACE		2	14'-10	31
	6h21-32	WINGWALL, HORIZONTAL, BACK FACE		10	13'-10	208
	5j1-32	WING TO FOOTING DOWEL, HORIZ.		16	6'-0	100
	7j2-32	COUNTERFORT, HORIZ.		8	8'-6	139
	5j3-32	COUNTERFORT HOOPS		14	10'-6	153
	5m1-32	BEAM STEPS, TRANSVERSE		28	6'-6	190
	5n1-32	BEAM STEPS, LONGITUDINAL		35	2'-8	97
	5s1-32	WINGWALL, VERTICAL		56	VARIES	402
	5s2-32	WINGWALL, VERTICAL		12	5'-0	63
		REINFORCING STEEL - EPOXY COATED - TOTAL (LBS.)				14,491
S. STEEL	5d5-32	PAVING NOTCH DOWELS		31	3'-6	113
	5h22-32	MASKWALL TIES		28	1'-9	51
		STAINLESS STEEL - TOTAL (LBS.)				164

REINFORCING BAR LIST - ONE ABUTMENT

	BAR	LOCATION	SHAPE	NO.	LENGTH	WEIGHT
EPOXY COATED BARS	8a1-32	FOOTING, LONGITUDINAL, BOTT.,		12	36'-8	1,175
	8a2-32	WING FOOTING, BACK FACE, NE WING		5	VARIES	186
	8a3-32	WING FOOTING, TRAFFIC FACE, NE WING		5	9'-9	130
	8a4-32	FOOTING, LONGITUDINAL, TOP		18	35'-10	1,722
	8a5-32	WING FOOTING, BACK FACE, NW WING		5	VARIES	191
	8a6-32	WING FOOTING, TRAFFIC FACE, NW WING		5	10'-3	137
	5a7-32	WING FOOTING, BACK FACE, NE WING		2	VARIES	37
	5a8-32	WING FOOTING, BACK FACE, NW WING		2	VARIES	38
	5b1-32	FOOTING HOOPS		76	18'-0	1,427
	5b2-32	WING FOOTING HOOPS		7	14'-0	102
	5b4-32	WING FOOTING TIES		14	8'-1	118
	6d1-32	BACKWALL, VERTICAL, B.F.		122	8'-2	1,496
	5d2-32	BACKWALL, VERTICAL, F.F.		61	7'-6	477
	5d3-32	PAVING NOTCH		61	4'-2	265
	5d4-32	PAVING NOTCH		61	3'-5	217
	4d6-32	BACKWALL, VERTICAL HOOP		61	7'-9	316
	5d7-32	WING EXTENSION, HORIZONTAL		32	8'-10	295
	5e1-32	MASKWALL, VERTICAL, N.E.		18	12'-6	235
	5e2-32	MASKWALL, VERTICAL		12	6'-11	87
	5e3-32	MASKWALL, VERT., CURVED, N.E.		2	13'-2	27
	5e4-32	MASKWALL, VERTICAL		4	10'-3	43
	5e5-32	MASKWALL, VERT., CURVED		4	11'-0	46
	5e6-32	MASKWALL, VERT., CURVED, N.W.		2	13'-3	28
	5e7-32	WINGWALL, VERTICAL		12	8'-7	107
	5e8-32	WINGWALL, VERTICAL		12	8'-9	110
	5e9-32	MASKWALL, VERTICAL, N.E.		14	VARIES	123
	5e10-32	MASKWALL, VERTICAL, N.W.		14	VARIES	124
	5e11-32	MASKWALL, VERTICAL, INTO FOOTING		20	2'-6	52
	5e12-32	MASKWALL, VERTICAL, N.W.		18	12'-8	238
	5e13-32	MASKWALL, VERTICAL, TOP		20	5'-1	106
	5e14-32	MASKWALL, VERTICAL, TOP		10	6'-5	67
	5e15-32	MASKWALL, VERTICAL, TRAFFIC FACE, N.E.		3	12'-3	38
	5e16-32	MASKWALL, VERTICAL, TRAFFIC FACE, N.W.		3	11'-4	35
	5e17-32	MASKWALL, VERTICAL, TRAFFIC FACE		2	5'-2	11
	5e18-32	MASKWALL, VERTICAL, TRAFFIC FACE, N.E.		1	8'-8	9
	5e19-32	MASKWALL, VERTICAL, TRAFFIC FACE, N.W.		1	8'-10	9

HIGH PERFORMANCE STRUCTURAL CONCRETE PLACEMENT QUANTITIES

LOCATION	QUANTITY
ABUTMENT FOOTING AND STEPS	60.0
BACKWALL BELOW CONSTR. JOINT	10.3
BACKWALL ABOVE CONSTR. JOINT	15.5
MASKWALL	24.5
TOTAL (C.Y.)	110.3

STRUCTURAL CONCRETE (BRIDGE) PLACEMENT QUANTITIES

LOCATION	QUANTITY
COUNTERFORT FOOTING	4.9
COUNTERFORT BRACE	0.6
WING	14.2
WINGWALL	5.5
TOTAL (C.Y.)	25.2

ESTIMATED QUANTITIES - ONE ABUTMENT

ITEM	UNIT	TOTAL
EXCAVATION, CL 20	CY	244
STRUCTURAL CONCRETE (BRIDGE)	CY	25.2
HIGH PERFORMANCE STRUCTURAL CONCRETE	CY	110.3
REINFORCING STEEL, EPOXY COATED	LB	14491
REINFORCING STEEL, STAINLESS STEEL	LB	164
PILE, STEEL, HP 10X57 (23 PILES @ 30'-0)	LF	690.0

NOTE:

SEE DESIGN SHEET 67 FOR ABUTMENT NOTES.

whks
engineers + planners + land surveyors

DESIGN FOR VARIABLE SKEW (L.A.)

2271'-6 x VARI. CONTINUOUS WELDED GIRDER BRIDGE-EBL W/14' BIKE TRAIL

138'-10 & 151'-0⅞ END SPANS MULTIPLE LENGTH INTERIOR SPANS

ABUTMENT NO. 32 DETAILS

STA. 6792+60.93 - 52' LEFT ℄ I-74 OCTOBER, 2015

SCOTT COUNTY

IOWA DEPARTMENT OF TRANSPORTATION - HIGHWAY DIVISION

DESIGN SHEET NO. 73 OF 282 FILE NO. 30253 DESIGN NO. 3408

BENCH MARK NO. 500: STA. 6781+18.92 LT. 161.19'
ELEV. 575.797, CHISELED "X" IN BOLT E. SIDE
CONCRETE STRUCTURE

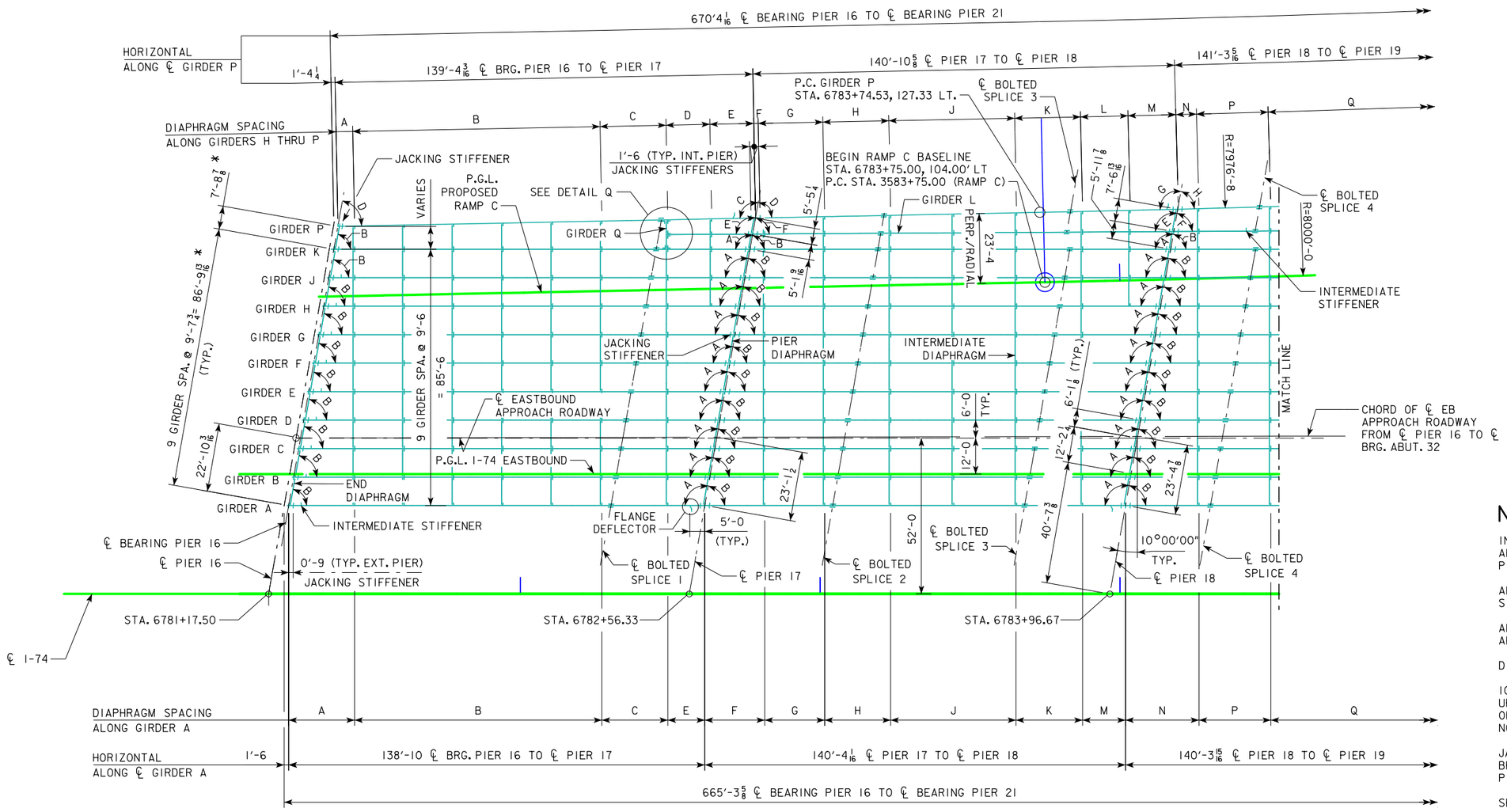

FRAMING PLAN

* MEASURED ALONG ℄ BEARING

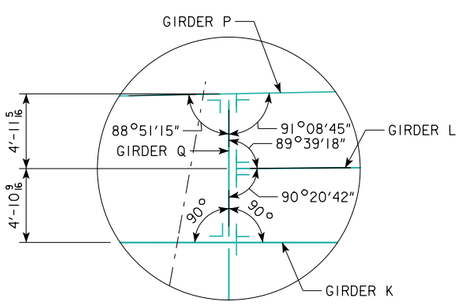

DETAIL Q

TABLE OF ANGLES

A	= 100°00'00"
B	= 80°00'00"
C	= 101°08'45"
D	= 78°51'15"
E	= 100°20'42"
F	= 79°39'18"
G	= 101°28'03"
H	= 78°31'57"
J	= 101°00'51"
K	= 78°59'09"
L	= 102°28'56"
M	= 77°31'04"
N	= 102°22'02"
P	= 77°37'58"
Q	= 103°22'38"
R	= 76°37'22"
S	= 104°16'11"

NOTES:

INTERMEDIATE STIFFENERS ADJACENT TO PIERS ARE 4'-2 FROM THE CENTERLINE OF BEARING OF PIER.

ALL 24 INTERMEDIATE STIFFENERS SHALL BE: SINGLE 5 X 1/2 PLATE

ALL INTERMEDIATE DIAPHRAGMS ARE NORMAL TO ℄ APPROACH ROADWAY.

DIMENSIONS ARE NOT ADJUSTED FOR SLOPE.

10 FLANGE DEFLECTORS ARE REQUIRED 5'-0 UPSLOPE FROM ℄ OF PIER BRG. ON THE OUTSIDE OF THE EXTERIOR GIRDERS, UNLESS OTHERWISE NOTED.

JACKING STIFFENERS ARE 0'-9 FROM ℄ OF PIER BRG. FOR EXTERIOR PIERS AND 1'-6 FROM ℄ OF PIER BRG. FOR INTERIOR PIERS AS SHOWN.

SEE DESIGN SHEET 152 FOR PIER STIFFENER SIZES.

SEE DESIGN SHEET 152 FOR STIFFENER WELDING DETAILS.

SEE DESIGN SHEET 152 FOR FLANGE DEFLECTOR DETAILS.

SEE DESIGN SHEET 76 FOR TABLES OF SPLICE AND DIAPHRAGM SPACINGS.

whks
engineers + planners + land surveyors

DESIGN FOR VARIABLE SKEW (L.A.)

2271'-6 x VARI. CONTINUOUS WELDED GIRDER BRIDGE-EBL W/14' BIKE TRAIL

138'-10 & 151'-0 7/8 END SPANS MULTIPLE LENGTH INTERIOR SPANS

FRAMING PLAN - UNIT 1

STA. 6792+60.93 - 52' LEFT ℄ I-74 OCTOBER, 2015

SCOTT COUNTY

IOWA DEPARTMENT OF TRANSPORTATION - HIGHWAY DIVISION

DESIGN SHEET NO. 74 OF 282 FILE NO. 30253 DESIGN NO. 3408

BENCH MARK NO. 500: STA. 6781+18.92 LT. 161.19'
ELEV. 575.797, CHISELED "X" IN BOLT E. SIDE
CONCRETE STRUCTURE

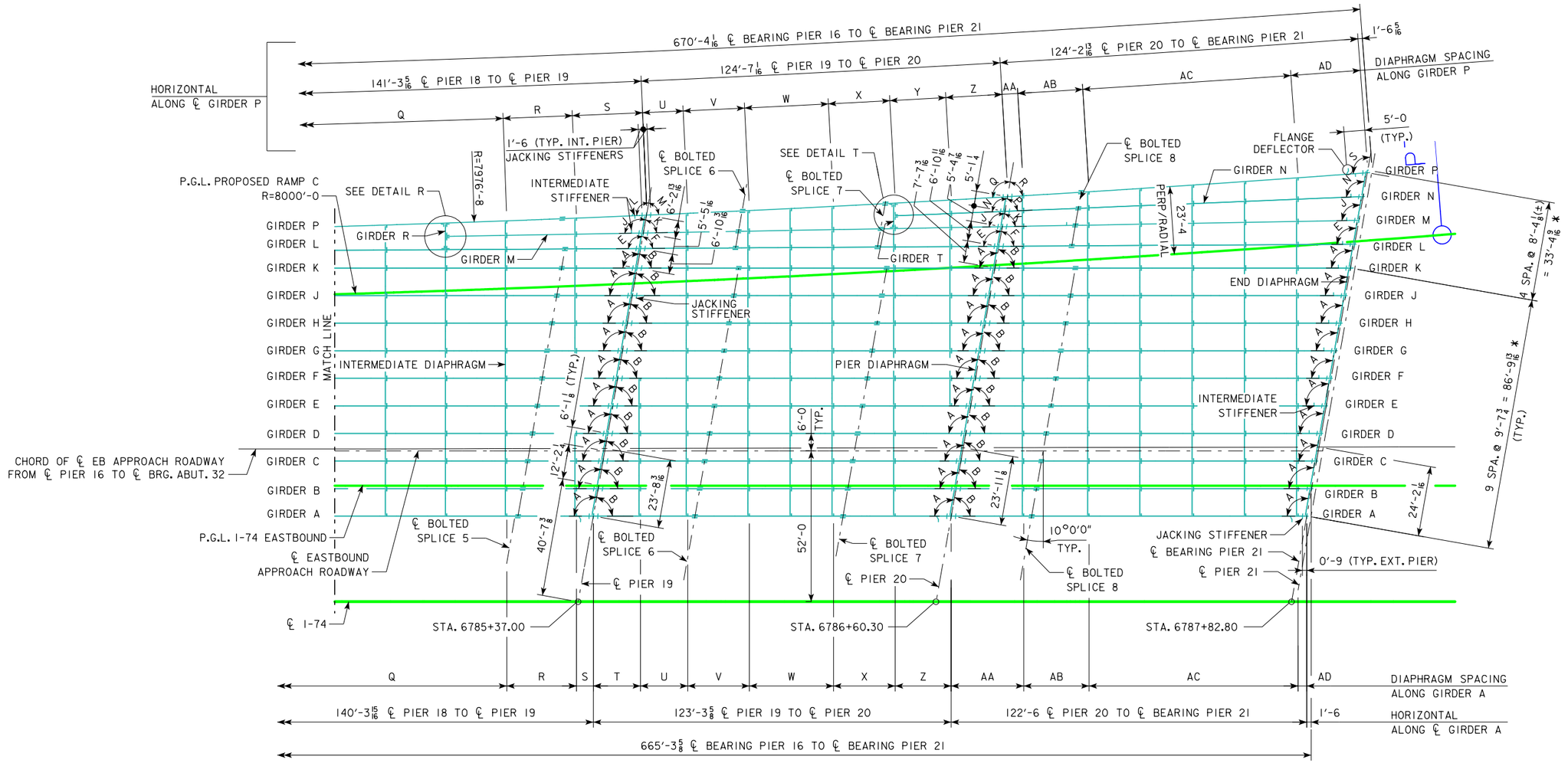

FRAMING PLAN

* MEASURED ALONG ℄ BEARING

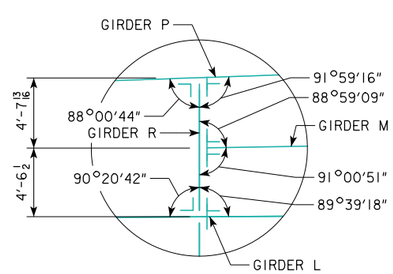

DETAIL R

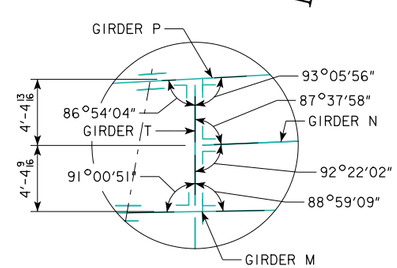

DETAIL T

SEE DESIGN SHEET 74 FOR FRAMING PLAN NOTES.

DESIGN FOR VARIABLE SKEW (L.A.)

2271'-6 x VARI. CONTINUOUS WELDED GIRDER BRIDGE-EBL W/14' BIKE TRAIL

138'-10 & 151'-0 7/8 END SPANS MULTIPLE LENGTH INTERIOR SPANS

FRAMING PLAN - UNIT 1

STA. 6792+60.93 - 52' LEFT ℄ I-74 OCTOBER, 2015

SCOTT COUNTY

IOWA DEPARTMENT OF TRANSPORTATION - HIGHWAY DIVISION

DESIGN SHEET NO. 75 OF 282 FILE NO. 30253 DESIGN NO. 3408

whks engineers + planners + land surveyors

DESIGN TEAM MG / BB / CF	SCOTT COUNTY	PROJECT NUMBER BRFIM-074-1(200)5--05-82	SHEET NUMBER 76

HORIZONTAL DIMENSIONS ALONG CENTERLINE OF GIRDERS

LOCATION	SPAN 16			SPAN 17				SPAN 18				SPAN 19				SPAN 20		
	℄ BRG. PIER 16 TO SPLICE 1	SPLICE 1 TO ℄ PIER 17	TOTAL SPAN LENGTH	℄ PIER 17 TO SPLICE 2	SPLICE 2 TO SPLICE 3	SPLICE 3 TO ℄ PIER 18	TOTAL SPAN LENGTH	℄ PIER 18 TO SPLICE 4	SPLICE 4 TO SPLICE 5	SPLICE 5 TO ℄ PIER 19	TOTAL SPAN LENGTH	℄ PIER 19 TO SPLICE 6	SPLICE 6 TO SPLICE 7	SPLICE 7 TO ℄ PIER 20	TOTAL SPAN LENGTH	℄ PIER 20 TO SPLICE 8	SPLICE 8 TO ℄ BRG PIER 21	TOTAL SPAN LENGTH
GIRDER P	107'-11 1/16	31'-5 3/16	139'-4 3/16	42'-10 1/8	62'-2 3/4	35'-9 3/4	140'-10 5/8	27'-3 5/16	85'-0	29'-0	141'-3 5/16	33'-0	49'-4 3/16	42'-2 7/8	124'-7 1/16	25'-4 15/16	98'-9 7/8	124'-2 13/16
LOCATION														S. END GRD N TO ℄ PIER 20	TOTAL SPAN LENGTH	℄ PIER 20 TO SPLICE 8	SPLICE 8 TO ℄ BRG PIER 21	TOTAL SPAN LENGTH
GIRDER N														37'-10 3/16	37'-10 3/16	25'-3 5/8	98'-2 7/16	123'-6 1/16
LOCATION										S. END GRD. M TO ℄ PIER 19	TOTAL SPAN LENGTH	℄ PIER 19 TO SPLICE 6	SPLICE 6 TO SPLICE 7	SPLICE 7 TO ℄ PIER 20	TOTAL SPAN LENGTH	℄ PIER 20 TO SPLICE 8	SPLICE 8 TO ℄ BRG PIER 21	TOTAL SPAN LENGTH
GIRDER M										67'-8 9/16	67'-8 9/16	32'-9 3/4	49'-0 1/16	41'-10 11/16	123'-8 7/16	25'-2 1/8	97'-8 11/16	122'-10 13/16
LOCATION		S. END GRD. L TO ℄ PIER 17	TOTAL SPAN LENGTH	℄ PIER 17 TO SPLICE 2	SPLICE 2 TO SPLICE 3	SPLICE 3 TO ℄ PIER 18	TOTAL SPAN LENGTH	℄ PIER 18 TO SPLICE 4	SPLICE 4 TO SPLICE 5	SPLICE 5 TO ℄ PIER 19	TOTAL SPAN LENGTH	℄ PIER 19 TO SPLICE 6	SPLICE 6 TO SPLICE 7	SPLICE 7 TO ℄ PIER 20	TOTAL SPAN LENGTH	℄ PIER 20 TO SPLICE 8	SPLICE 8 TO ℄ BRG PIER 21	TOTAL SPAN LENGTH
GIRDER L		28'-3 5/8	28'-3 5/8	42'-8 3/4	62'-0 13/16	35'-8 5/16	140'-5 7/8	27'-1 15/16	87'-3 11/16	26'-0 1/8	140'-5 13/16	32'-8 7/8	48'-10 3/4	41'-9 9/16	123'-5 3/16	25'-1 1/2	97'-6 1/16	122'-7 9/16
LOCATION	℄ BRG. PIER 16 TO SPLICE 1	SPLICE 1 TO ℄ PIER 17	TOTAL SPAN LENGTH	℄ PIER 17 TO SPLICE 2	SPLICE 2 TO SPLICE 3	SPLICE 3 TO ℄ PIER 18	TOTAL SPAN LENGTH	℄ PIER 18 TO SPLICE 4	SPLICE 4 TO SPLICE 5	SPLICE 5 TO ℄ PIER 19	TOTAL SPAN LENGTH	℄ PIER 19 TO SPLICE 6	SPLICE 6 TO SPLICE 7	SPLICE 7 TO ℄ PIER 20	TOTAL SPAN LENGTH	℄ PIER 20 TO SPLICE 8	SPLICE 8 TO ℄ BRG PIER 21	TOTAL SPAN LENGTH
GIRDER K	107'-6 3/16	31'-3 3/4	138'-10	42'-8 1/4	64'-0	33'-7 7/8	140'-4 1/16	28'-4 1/8	86'-0	25'-11 13/16	140'-3 15/16	35'-0 3/16	51'-0	37'-3 7/16	123'-3 5/8	27'-8 9/16	94'-9 3/8	122'-6
GIRDER J	107'-6 3/16	31'-3 3/4	138'-10	42'-8 1/4	64'-0	33'-7 7/8	140'-4 1/16	28'-4 1/8	86'-0	25'-11 13/16	140'-3 15/16	35'-0 3/16	51'-0	37'-3 7/16	123'-3 5/8	27'-8 9/16	94'-9 3/8	122'-6
GIRDER H	107'-6 3/16	31'-3 3/4	138'-10	42'-8 1/4	64'-0	33'-7 7/8	140'-4 1/16	28'-4 1/8	86'-0	25'-11 13/16	140'-3 15/16	35'-0 3/16	51'-0	37'-3 7/16	123'-3 5/8	27'-8 9/16	94'-9 3/8	122'-6
GIRDER G	107'-6 3/16	31'-3 3/4	138'-10	42'-8 1/4	64'-0	33'-7 7/8	140'-4 1/16	28'-4 1/8	86'-0	25'-11 13/16	140'-3 15/16	35'-0 3/16	51'-0	37'-3 7/16	123'-3 5/8	27'-8 9/16	94'-9 3/8	122'-6
GIRDER F	107'-6 3/16	31'-3 3/4	138'-10	42'-8 1/4	64'-0	33'-7 7/8	140'-4 1/16	28'-4 1/8	86'-0	25'-11 13/16	140'-3 15/16	35'-0 3/16	51'-0	37'-3 7/16	123'-3 5/8	27'-8 9/16	94'-9 3/8	122'-6
GIRDER E	107'-6 3/16	31'-3 3/4	138'-10	42'-8 1/4	64'-0	33'-7 7/8	140'-4 1/16	28'-4 1/8	86'-0	25'-11 13/16	140'-3 15/16	35'-0 3/16	51'-0	37'-3 7/16	123'-3 5/8	27'-8 9/16	94'-9 3/8	122'-6
GIRDER D	107'-6 3/16	31'-3 3/4	138'-10	42'-8 1/4	64'-0	33'-7 7/8	140'-4 1/16	28'-4 1/8	86'-0	25'-11 13/16	140'-3 15/16	35'-0 3/16	51'-0	37'-3 7/16	123'-3 5/8	27'-8 9/16	94'-9 3/8	122'-6
GIRDER C	107'-6 3/16	31'-3 3/4	138'-10	42'-8 1/4	64'-0	33'-7 7/8	140'-4 1/16	28'-4 1/8	86'-0	25'-11 13/16	140'-3 15/16	35'-0 3/16	51'-0	37'-3 7/16	123'-3 5/8	27'-8 9/16	94'-9 3/8	122'-6
GIRDER B	107'-6 3/16	31'-3 3/4	138'-10	42'-8 1/4	64'-0	33'-7 7/8	140'-4 1/16	28'-4 1/8	86'-0	25'-11 13/16	140'-3 15/16	35'-0 3/16	51'-0	37'-3 7/16	123'-3 5/8	27'-8 9/16	94'-9 3/8	122'-6
GIRDER A	107'-6 3/16	31'-3 3/4	138'-10	42'-8 1/4	64'-0	33'-7 7/8	140'-4 1/16	28'-4 1/8	86'-0	25'-11 13/16	140'-3 15/16	35'-0 3/16	51'-0	37'-3 7/16	123'-3 5/8	27'-8 9/16	94'-9 3/8	122'-6

HORIZONTAL DIAPHRAGM SPACINGS ALONG CENTERLINE OF GIRDERS

LOCATION	SPAN 16					SPAN 17							SPAN 18					SPAN 19							SPAN 20			
	A	B	C	D	E	F	G	H	J	K	L	M	N	P	Q	R	S	T	U	V	W	X	Y	Z	AA	AB	AC	AD
GIRDER P	5'-6 15/16	5 @ 16'-6 1/16	22'-0 1/16	14'-7 1/2	14'-7 9/16	3'-1 1/16	20'-0	22'-0 1/16	2 @ 21'-0 1/16	22'-0	15'-10 3/4	15'-10 5/8	7'-0 7/8	24'-0 1/8	3 @ 20'-8 1/8	24'-0 3/16	24'-1 11/16	---	14'-2 13/16	21'-3 3/8	2 @ 14'-6 3/16	21'-3 3/8	19'-4 7/8	19'-4 5/16	5'-7 3/16	22'-6 1/2	4 @ 18'-0 7/16	23'-11 1/4
GIRDER N																							19'-4 11/16	18'-5 1/2	6'-5 3/4	22'-6 1/4	4 @ 18'-0 3/16	22'-5 5/16
GIRDER M																24'-0 1/16	23'-0 1/2	---	15'-3 11/16	21'-3 1/16	2 @ 14'-6	21'-3 1/16	19'-4 1/2	17'-6 1/8	7'-4 7/8	22'-6 1/16	4 @ 18'-0 1/16	20'-11 3/4
GIRDER L				14'-7 1/2	13'-8 3/16	4'-0 3/8	20'-0	22'-0	2 @ 21'-0	22'-0	15'-10 3/4	14'-6 13/16	8'-4 9/16	24'-0	3 @ 20'-8	24'-0	22'-1 3/16	---	16'-2 15/16	21'-3	2 @ 14'-6	21'-3	19'-4 1/2	16'-3 3/4	8'-7 1/4	22'-6	4 @ 18'-0	19'-6 5/16
GIRDER K	6'-11 1/16	5 @ 16'-6	22'-0	14'-7 7/16	12'-9 7/16	4'-11 1/16	20'-0	22'-0	2 @ 21'-0	22'-0	15'-10 11/16	13'-6 5/16	9'-5 1/16	24'-0	3 @ 20'-8 1/16	24'-0	20'-10 3/4	---	17'-5 5/16	21'-3	2 @ 14'-6	21'-3	19'-4 7/16	14'-11 7/8	9'-11 3/16	22'-6	4 @ 18'-0	18'-0 13/16
GIRDER J	8'-7 3/16	5 @ 16'-6	22'-0	14'-7 7/16	11'-1 3/8	6'-7 3/16	20'-0	22'-0	2 @ 21'-0	22'-0	15'-10 11/16	11'-10 1/4	11'-1 3/16	24'-0	3 @ 20'-8 1/16	24'-0	19'-2 11/16	---	19'-1 7/16	21'-3	2 @ 14'-6	21'-3	19'-4 7/16	13'-3 3/4	11'-7 5/16	22'-6	4 @ 18'-0	16'-4 11/16
GIRDER H	10'-3 5/16	5 @ 16'-6	22'-0	14'-7 7/16	9'-5 1/4	8'-3 1/4	20'-0	22'-0	2 @ 21'-0	22'-0	15'-10 11/16	10'-2 1/8	12'-9 1/4	24'-0	3 @ 20'-8 1/16	24'-0	17'-6 9/16	---	20'-9 1/2	21'-3	2 @ 14'-6	21'-3	19'-4 7/16	11'-7 5/8	13'-3 3/8	22'-6	4 @ 18'-0	14'-8 9/16
GIRDER G	11'-11 3/8	5 @ 16'-6	22'-0	---	22'-4 9/16	9'-11 3/8	20'-0	22'-0	2 @ 21'-0	22'-0	---	24'-4 11/16	14'-5 3/8	24'-0	3 @ 20'-8 1/16	24'-0	15'-10 1/2	---	22'-5 5/8	21'-3	2 @ 14'-6	21'-3	19'-4 7/16	9'-11 9/16	14'-11 1/2	22'-6	4 @ 18'-0	13'-0 1/2
GIRDER F	13'-7 1/2	5 @ 16'-6	22'-0	---	20'-8 1/2	11'-7 1/2	20'-0	22'-0	2 @ 21'-0	22'-0	---	22'-8 5/8	16'-1 1/2	24'-0	3 @ 20'-8 1/16	24'-0	14'-2 3/8	7'-10 9/16	16'-3 1/8	21'-3	2 @ 14'-6	21'-3	19'-4 7/16	8'-3 7/16	16'-7 9/16	22'-6	4 @ 18'-0	11'-4 3/8
GIRDER E	15'-3 5/8	5 @ 16'-6	22'-0	---	19'-0 3/8	13'-3 9/16	20'-0	22'-0	2 @ 21'-0	22'-0	---	21'-0 1/2	17'-9 9/16	24'-0	3 @ 20'-8 1/16	24'-0	12'-6 1/4	9'-6 11/16	16'-3 1/8	21'-3	2 @ 14'-6	21'-3	19'-4 7/16	6'-7 3/8	18'-3 11/16	22'-6	4 @ 18'-0	9'-8 5/16
GIRDER D	16'-11 11/16	5 @ 16'-6	22'-0	---	17'-4 5/16	14'-11 11/16	20'-0	22'-0	2 @ 21'-0	22'-0	---	19'-4 7/16	19'-5 11/16	24'-0	3 @ 20'-8 1/16	24'-0	10'-10 3/16	11'-2 13/16	16'-3 1/8	21'-3	2 @ 14'-6	21'-3	---	24'-3 11/16	19'-11 13/16	22'-6	4 @ 18'-0	8'-0 3/16
GIRDER C	18'-7 13/16	5 @ 16'-6	22'-0	---	15'-8 3/16	16'-7 3/4	20'-0	22'-0	2 @ 21'-0	22'-0	---	17'-8 5/16	21'-1 3/4	24'-0	3 @ 20'-8 1/16	24'-0	9'-2 1/16	12'-10 7/8	16'-3 1/8	21'-3	2 @ 14'-6	21'-3	---	22'-7 9/16	21'-7 7/8	22'-6	4 @ 18'-0	6'-4 1/16
GIRDER B	20'-3 7/8	5 @ 16'-6	22'-0	---	14'-0 1/16	18'-3 7/8	20'-0	22'-0	2 @ 21'-0	22'-0	---	16'-0 3/16	22'-9 7/8	24'-0	3 @ 20'-8 1/16	24'-0	7'-5 15/16	14'-7	16'-3 1/8	21'-3	2 @ 14'-6	21'-3	---	20'-11 1/2	23'-4	22'-6	4 @ 18'-0	4'-8
GIRDER A	22'-0	5 @ 16'-6	22'-0	---	12'-4	20'-0	20'-0	22'-0	2 @ 21'-0	22'-0	---	14'-4 1/8	24'-6	24'-0	3 @ 20'-8 1/16	24'-0	5'-9 7/8	16'-3 1/8	16'-3 1/8	21'-3	2 @ 14'-6	21'-3	---	19'-3 3/8	25'-0 1/8	22'-6	4 @ 18'-0	2'-11 7/8

SEE DESIGN SHEETS 74 & 75 FOR DIAGRAM CORRESPONDING TO HORIZONTAL DIMESIONS AND DIAPHRAGM SPACINGS ALONG ℄ OF GIRDERS.

whks
engineers + planners + land surveyors

DESIGN FOR VARIABLE SKEW (L.A.)

2271'-6 x VARI. CONTINUOUS WELDED GIRDER BRIDGE-EBL W/14' BIKE TRAIL

138'-10 & 151'-0 7/8 END SPANS MULTIPLE LENGTH INTERIOR SPANS

FRAMING PLAN - UNIT 1

STA. 6792+60.93 - 52' LEFT ℄ I-74 OCTOBER, 2015

SCOTT COUNTY

IOWA DEPARTMENT OF TRANSPORTATION - HIGHWAY DIVISION

DESIGN SHEET NO. 76 OF 282 FILE NO. 30253 DESIGN NO. 3408

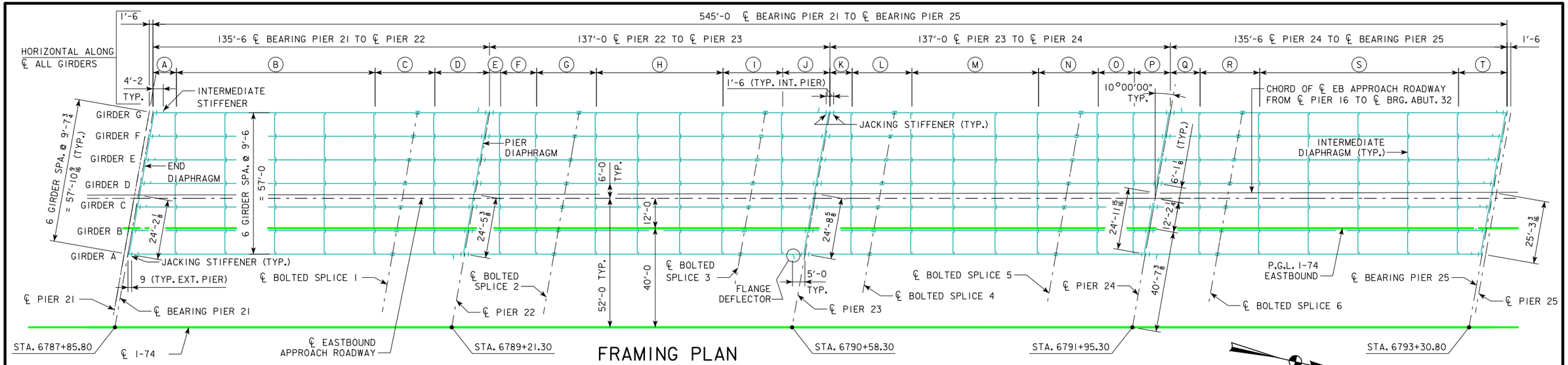

FRAMING PLAN

BENCH MARK NO. 500:
STA. 6781+18.92 LT. 161.19'
ELEV. 575.797, CHISELED "X"
IN BOLT E. SIDE
CONCRETE STRUCTURE

HORIZONTAL DIMENSIONS ALONG CENTERLINE OF GIRDERS

LOCATION	SPAN 21			SPAN 22				SPAN 23				SPAN 24		
	℄ BRG. PIER 21 TO SPLICE 1	SPLICE 1 TO ℄ PIER 22	TOTAL SPAN LENGTH	℄ PIER 22 TO SPLICE 2	SPLICE 2 TO SPLICE 3	SPLICE 3 TO ℄ PIER 23	TOTAL SPAN LENGTH	℄ PIER 23 TO SPLICE 4	SPLICE 4 TO SPLICE 5	SPLICE 5 TO ℄ PIER 24	TOTAL SPAN LENGTH	℄ PIER 24 TO SPLICE 6	SPLICE 6 TO ℄ BRG PIER 25	TOTAL SPAN LENGTH
GIRDER G	106'-6	29'-0	135'-6	36'-0	75'-0	26'-0	137'-0	26'-0	75'-0	36'-0	137'-0	29'-0	106'-6	135'-6
GIRDER F	106'-6	29'-0	135'-6	36'-0	75'-0	26'-0	137'-0	26'-0	75'-0	36'-0	137'-0	29'-0	106'-6	135'-6
GIRDER E	106'-6	29'-0	135'-6	36'-0	75'-0	26'-0	137'-0	26'-0	75'-0	36'-0	137'-0	29'-0	106'-6	135'-6
GIRDER D	106'-6	29'-0	135'-6	36'-0	75'-0	26'-0	137'-0	26'-0	75'-0	36'-0	137'-0	29'-0	106'-6	135'-6
GIRDER C	106'-6	29'-0	135'-6	36'-0	75'-0	26'-0	137'-0	26'-0	75'-0	36'-0	137'-0	29'-0	106'-6	135'-6
GIRDER B	106'-6	29'-0	135'-6	36'-0	75'-0	26'-0	137'-0	26'-0	75'-0	36'-0	137'-0	29'-0	106'-6	135'-6
GIRDER A	106'-6	29'-0	135'-6	36'-0	75'-0	26'-0	137'-0	26'-0	75'-0	36'-0	137'-0	29'-0	106'-6	135'-6

HORIZONTAL DIAPHRAGM SPACING ALONG CENTERLINE OF GIRDERS

LOCATION	SPAN 21				SPAN 22						SPAN 23						SPAN 24			
	A	B	C	D	E	F	G	H	I	J	K	L	M	N	O	P	Q	R	S	T
BEAM G	9'-5 3/8	4 @ 20'-0	24'-0 5/8	22'-0	4'-5 3/8	14'-6	24'-0 5/8	3 @ 16'-11 13/16	24'-0 5/8	19'-0	8'-11 3/8	24'-0 5/8	3 @ 16'-11 13/16	24'-0 5/8	14'-6	14'-6	11'-11 3/8	24'-0 5/8	4 @ 20'-0	19'-6
BEAM F	11'-1 1/2	4 @ 20'-0	24'-0 5/8	20'-3 7/8	6'-1 1/2	14'-6	24'-0 5/8	3 @ 16'-11 13/16	24'-0 5/8	17'-3 7/8	10'-7 1/2	24'-0 5/8	3 @ 16'-11 13/16	24'-0 5/8	14'-6	12'-9 7/8	13'-7 1/2	24'-0 5/8	4 @ 20'-0	17'-9 7/8
BEAM E	12'-9 5/8	4 @ 20'-0	24'-0 5/8	18'-7 13/16	7'-9 5/8	14'-6	24'-0 5/8	3 @ 16'-11 13/16	24'-0 5/8	15'-7 13/16	12'-3 5/8	24'-0 5/8	3 @ 16'-11 13/16	24'-0 5/8	14'-6	11'-1 13/16	15'-3 5/8	24'-0 5/8	4 @ 20'-0	16'-1 13/16
BEAM D	14'-5 11/16	4 @ 20'-0	24'-0 5/8	16'-11 11/16	9'-5 11/16	14'-6	24'-0 5/8	3 @ 16'-11 13/16	24'-0 5/8	13'-11 11/16	13'-11 11/16	24'-0 5/8	3 @ 16'-11 13/16	24'-0 5/8	14'-6	9'-5 11/16	16'-11 11/16	24'-0 5/8	4 @ 20'-0	14'-5 11/16
BEAM C	16'-1 13/16	4 @ 20'-0	24'-0 5/8	15'-3 5/8	11'-1 13/16	14'-6	24'-0 5/8	3 @ 16'-11 13/16	24'-0 5/8	12'-3 5/8	15'-7 13/16	24'-0 5/8	3 @ 16'-11 13/16	24'-0 5/8	14'-6	7'-9 5/8	18'-7 13/16	24'-0 5/8	4 @ 20'-0	12'-9 5/8
BEAM B	17'-9 7/8	4 @ 20'-0	24'-0 5/8	13'-7 1/2	12'-9 7/8	14'-6	24'-0 5/8	3 @ 16'-11 13/16	24'-0 5/8	10'-7 1/2	17'-3 7/8	24'-0 5/8	3 @ 16'-11 13/16	24'-0 5/8	14'-6	6'-1 1/2	20'-3 7/8	24'-0 5/8	4 @ 20'-0	11'-1 1/2
BEAM A	19'-6	4 @ 20'-0	24'-0 5/8	11'-11 3/8	14'-6	14'-6	24'-0 5/8	3 @ 16'-11 13/16	24'-0 5/8	8'-11 3/8	19'-0	24'-0 5/8	3 @ 16'-11 13/16	24'-0 5/8	14'-6	4'-5 3/8	22'-0	24'-0 5/8	4 @ 20'-0	9'-5 3/8

NOTES:

INTERMEDIATE STIFFENERS ADJACENT TO PIERS ARE 4'-2 FROM THE CENTERLINE OF BEARING OF PIER.

ALL 14 INTERMEDIATE STIFFENERS SHALL BE: SINGLE 5 X 1/2 PLATE

ALL INTERMEDIATE DIAPHRAGMS ARE NORMAL TO GIRDERS.

DIMENSIONS ARE NOT ADJUSTED FOR SLOPE.

6 FLANGE DEFLECTORS ARE REQUIRED 5'-0 UPSLOPE FROM ℄ OF PIER BRG. ON THE OUTSIDE OF THE EXTERIOR GIRDERS, UNLESS OTHERWISE NOTED.

JACKING STIFFENERS ARE 0'-9 FROM ℄ OF PIER BRG. FOR EXTERIOR PIERS AND 1'-6 FROM ℄ OF PIER BRG. FOR INTERIOR PIERS AS SHOWN.

SEE DESIGN SHEET 152 FOR PIER STIFFENER SIZES.

SEE DESIGN SHEET 152 FOR STIFFENER WELDING DETAILS.

SEE DESIGN SHEET 152 FOR FLANGE DEFLECTOR DETAILS.

whks
engineers + planners + land surveyors

DESIGN FOR VARIABLE SKEW (L.A.)

2271'-6 x VARI. CONTINUOUS WELDED GIRDER BRIDGE-EBL W/14' BIKE TRAIL

138'-10 & 151'-0 7/8 END SPANS MULTIPLE LENGTH INTERIOR SPANS

FRAMING PLAN - UNIT 2

STA. 6792+60.93 - 52' LEFT ℄ I-74 OCTOBER, 2015

SCOTT COUNTY

IOWA DEPARTMENT OF TRANSPORTATION - HIGHWAY DIVISION

DESIGN SHEET NO. 77 OF 282 FILE NO. 30253 DESIGN NO. 3408

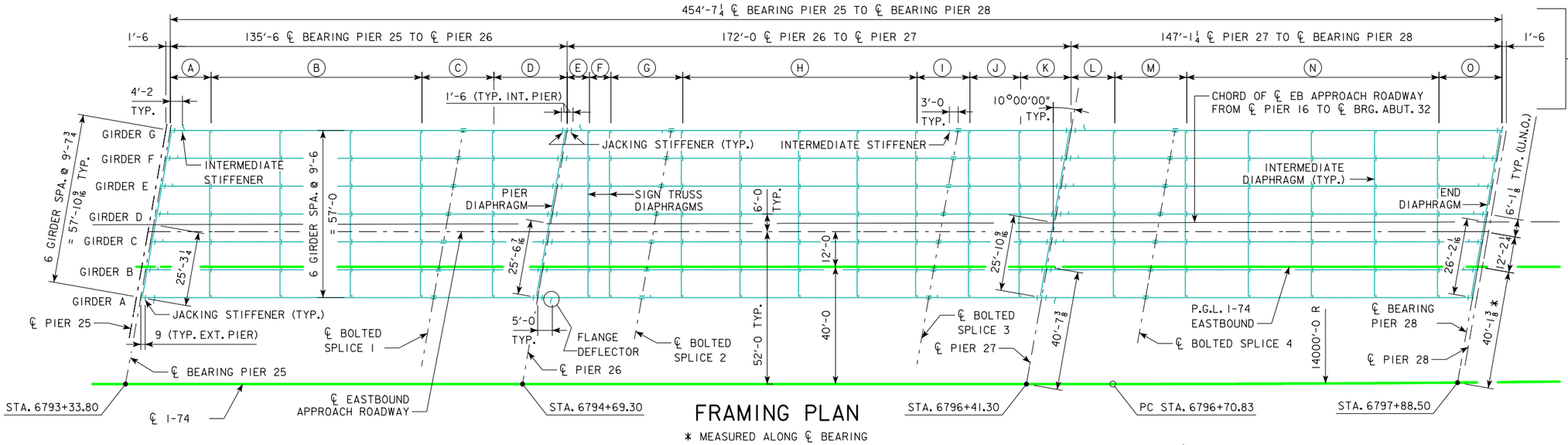

FRAMING PLAN

* MEASURED ALONG ℄ BEARING

BENCH MARK NO. 500:
STA. 6781+18.92 LT. 161.19'
ELEV. 575.797, CHISELED "X"
IN BOLT E. SIDE
CONCRETE STRUCTURE

HORIZONTAL DIMENSIONS ALONG CENTERLINE OF GIRDERS

LOCATION	SPAN 25			SPAN 26				SPAN 27		
	℄ BRG. PIER 25 TO SPLICE 1	SPLICE 1 TO ℄ PIER 26	TOTAL SPAN LENGTH	℄ PIER 26 TO SPLICE 2	SPLICE 2 TO SPLICE 3	SPLICE 3 TO ℄ PIER 27	TOTAL SPAN LENGTH	℄ PIER 27 TO SPLICE 4	SPLICE 4 TO ℄ BRG PIER 28	TOTAL SPAN LENGTH
GIRDER G	100'-0	35'-6	135'-6	35'-6	98'-0	38'-6	172'-0	35'-6	111'-7 1/4	147'-1 1/4
GIRDER F	100'-0	35'-6	135'-6	35'-6	98'-0	38'-6	172'-0	35'-6	111'-7 1/4	147'-1 1/4
GIRDER E	100'-0	35'-6	135'-6	35'-6	98'-0	38'-6	172'-0	35'-6	111'-7 1/4	147'-1 1/4
GIRDER D	100'-0	35'-6	135'-6	35'-6	98'-0	38'-6	172'-0	35'-6	111'-7 1/4	147'-1 1/4
GIRDER C	100'-0	35'-6	135'-6	35'-6	98'-0	38'-6	172'-0	35'-6	111'-7 1/4	147'-1 1/4
GIRDER B	100'-0	35'-6	135'-6	35'-6	98'-0	38'-6	172'-0	35'-6	111'-7 1/4	147'-1 1/4
GIRDER A	100'-0	35'-6	135'-6	35'-6	98'-0	38'-6	172'-0	35'-6	111'-7 1/4	147'-1 1/4

HORIZONTAL DIAPHRAGM SPACINGS ALONG CENTERLINE OF GIRDERS

LOCATION	SPAN 25				SPAN 26							SPAN 27			
	A	B	C	D	E	F	G	H	I	J	K	L	M	N	O
BEAM G	13'-11 3/8	3 @ 24'-0	24'-6 5/8	25'-0	7'-7 3/8	7'-4	24'-6 1/8	4 @ 20'-0	18'-0 5/8	17'-3	17'-3	14'-11 3/8	24'-6 5/8	4 @ 21'-6 1/4	21'-6 1/4
BEAM F	15'-7 1/2	3 @ 24'-0	24'-6 5/8	23'-3 15/16	9'-3 1/2	7'-4	24'-6 1/8	4 @ 20'-0	18'-0 5/8	17'-3	15'-6 7/8	16'-7 1/2	24'-6 5/8	4 @ 21'-6 1/4	19'-10 1/8
BEAM E	17'-3 5/8	3 @ 24'-0	24'-6 5/8	21'-7 13/16	10'-11 5/8	7'-4	24'-6 1/8	4 @ 20'-0	18'-0 5/8	17'-3	13'-10 13/16	18'-3 5/8	24'-6 5/8	4 @ 21'-6 1/4	18'-2 1/16
BEAM D	18'-11 11/16	3 @ 24'-0	24'-6 5/8	19'-11 11/16	12'-7 11/16	7'-4	24'-6 1/8	4 @ 20'-0	18'-0 5/8	17'-3	12'-2 11/16	19'-11 11/16	24'-6 5/8	4 @ 21'-6 1/4	16'-5 15/16
BEAM C	20'-7 13/16	3 @ 24'-0	24'-6 5/8	18'-3 5/8	14'-3 13/16	7'-4	24'-6 1/8	4 @ 20'-0	18'-0 5/8	17'-3	10'-6 5/8	21'-7 13/16	24'-6 5/8	4 @ 21'-6 1/4	14'-9 7/8
BEAM B	22'-3 7/8	3 @ 24'-0	24'-6 5/8	16'-7 1/2	15'-11 7/8	7'-4	24'-6 1/8	4 @ 20'-0	18'-0 5/8	17'-3	8'-10 1/2	23'-3 7/8	24'-6 5/8	4 @ 21'-6 1/4	13'-1 3/4
BEAM A	24'-0	3 @ 24'-0	24'-6 5/8	14'-11 3/8	17'-8	7'-4	24'-6 1/8	4 @ 20'-0	18'-0 5/8	17'-3	7'-2 3/8	25'-0	24'-6 5/8	4 @ 21'-6 1/4	11'-5 5/8

NOTES:

INTERMEDIATE STIFFENERS ADJACENT TO PIERS ARE 4'-2 FROM THE CENTERLINE OF BEARING OF PIER. INTERMEDIATE STIFFENERS ADJACENT TO GIRDER SPLICES ARE 3'-0 FROM THE ℄ OF SPLICE.

ALL 21 INTERMEDIATE STIFFENERS SHALL BE:
SINGLE 5 X 1/2 PLATE

ALL INTERMEDIATE DIAPHRAGMS ARE NORMAL TO GIRDERS.

DIMENSIONS ARE NOT ADJUSTED FOR SLOPE.

6 FLANGE DEFLECTORS ARE REQUIRED 5'-0 UPSLOPE FROM ℄ OF PIER BRG. ON THE OUTSIDE OF THE EXTERIOR GIRDERS, UNLESS OTHERWISE NOTED.

JACKING STIFFENERS ARE 0'-9 FROM ℄ OF PIER BRG. FOR EXTERIOR PIERS AND 1'-6 FROM ℄ OF PIER BRG. FOR INTERIOR PIERS AS SHOWN.

SEE DESIGN SHEET 152 FOR PIER STIFFENER SIZES.

SEE DESIGN SHEET 152 FOR STIFFENER WELDING DETAILS.

SEE DESIGN SHEET 152 FOR FLANGE DEFLECTOR DETAILS.

whks
engineers + planners + land surveyors

DESIGN FOR VARIABLE SKEW (L.A.)

2271'-6 x VARI. CONTINUOUS WELDED GIRDER BRIDGE-EBL W/14' BIKE TRAIL

138'-10 & 151'-0 7/8 END SPANS MULTIPLE LENGTH INTERIOR SPANS

FRAMING PLAN - UNIT 3

STA. 6792+60.93 - 52' LEFT ℄ I-74 OCTOBER, 2015

SCOTT COUNTY

IOWA DEPARTMENT OF TRANSPORTATION - HIGHWAY DIVISION

DESIGN SHEET NO. 78 OF 282 FILE NO. 30253 DESIGN NO. 3408

BENCH MARK NO. 500: STA. 6781+18.92 LT. 161.19'
ELEV. 575.797, CHISELED "X" IN BOLT E. SIDE
CONCRETE STRUCTURE

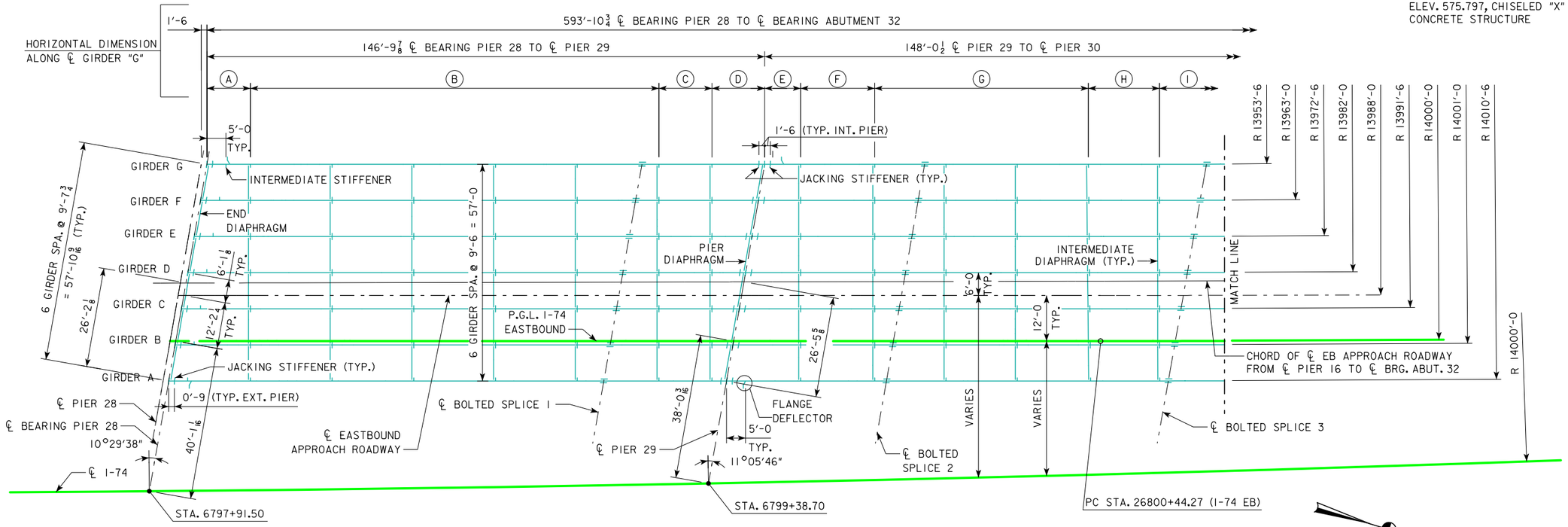

FRAMING PLAN

HORIZONTAL DIMENSIONS ALONG CENTERLINE OF GIRDERS

LOCATION	SPAN 28			SPAN 29			
	℄ BRG. PIER 28 TO SPLICE 1	SPLICE 1 TO ℄ PIER 29	TOTAL SPAN LENGTH	℄ PIER 29 TO SPLICE 2	SPLICE 2 TO SPLICE 3	SPLICE 3 TO ℄ PIER 30	TOTAL SPAN LENGTH
GIRDER G	114'-6	32'-3⅞	146'-9⅞	42'-0 15/16	74'-2⅜	31'-9 3/16	148'-0½
GIRDER F	114'-6	32'-3⅞	146'-9⅞	42'-0 15/16	74'-2⅜	31'-9 3/16	148'-0½
GIRDER E	114'-6	32'-3⅞	146'-9⅞	42'-0 15/16	74'-2⅜	31'-9⅛	148'-0½
GIRDER D	114'-6	32'-3⅞	146'-9⅞	42'-0 15/16	74'-2⅜	31'-9⅛	148'-0½
GIRDER C	114'-6	32'-3⅞	146'-9⅞	42'-0 15/16	74'-2⅜	31'-9⅛	148'-0 7/16
GIRDER B	114'-6	32'-3⅞	146'-9⅞	42'-0 15/16	74'-2⅜	31'-9⅛	148'-0 7/16
GIRDER A	114'-6	32'-3⅞	146'-9⅞	42'-0 15/16	74'-2⅜	31'-9 1/16	148'-0 7/16

HORIZONTAL DIMENSIONS ALONG CENTERLINE OF GIRDERS

LOCATION	SPAN 30				SPAN 31		
	℄ PIER 30 TO SPLICE 4	SPLICE 4 TO SPLICE 5	SPLICE 5 TO ℄ PIER 31	TOTAL SPAN LENGTH	℄ PIER 31 TO SPLICE 6	SPLICE 6 TO ℄ BRG ABUT. 32	TOTAL SPAN LENGTH
GIRDER G	32'-2 13/16	72'-10 13/16	42'-9 11/16	147'-11 5/16	32'-3½	118'-9 9/16	151'-1 1/16
GIRDER F	32'-2 13/16	72'-10 13/16	42'-9⅝	147'-11¼	32'-3 9/16	118'-9 7/16	151'-1
GIRDER E	32'-2⅞	72'-10 13/16	42'-9 9/16	147'-11¼	32'-3⅝	118'-9 5/16	151'-0 15/16
GIRDER D	32'-2⅞	72'-10 13/16	42'-9½	147'-11 3/16	32'-3 11/16	118'-9¼	151'-0 15/16
GIRDER C	32'-2⅞	72'-10 13/16	42'-9 7/16	147'-11⅛	32'-3¾	118'-9⅛	151'-0⅞
GIRDER B	32'-2⅞	72'-10 13/16	42'-9⅜	147'-11⅛	32'-3 13/16	118'-9	151'-0 13/16
GIRDER A	32'-2 15/16	72'-10 13/16	42'-9⅜	147'-11 1/16	32'-3⅞	118'-8 15/16	151'-0¾

NOTES:

INTERMEDIATE STIFFENERS ADJACENT TO PIERS AND THE ABUTMENT ARE 5'-0 FROM THE ℄ OF BEARING. INTERMEDIATE STIFFENERS ADJACENT TO SPLICES ARE 3'-0 FROM THE ℄ OF SPLICE.

ALL 16 INTERMEDIATE STIFFENERS SHALL BE: SINGLE 5 × ½ PLATE

ALL INTERMEDIATE DIAPHRAGMS ARE NORMAL TO GIRDERS.

DIMENSIONS ARE NOT ADJUSTED FOR SLOPE.

8 FLANGE DEFLECTORS ARE REQUIRED 5'-0 UPSLOPE FROM ℄ OF PIER BRG. ON THE OUTSIDE OF THE EXTERIOR GIRDERS, UNLESS OTHERWISE NOTED.

JACKING STIFFENERS ARE 0'-9 AND 1'-3 FROM ℄ OF PIER BRG. FOR THE EXTERIOR PIER AND ABUTMENT, RESPECTIVELY, AND 1'-6 FROM ℄ PIER BRG. FOR INTERIOR PIERS AS SHOWN.

SEE DESIGN SHEET 152 FOR ABUTMENT AND PIER STIFFENER SIZES.

SEE DESIGN SHEET 152 FOR STIFFENER WELDING DETAILS.

SEE DESIGN SHEET 152 FOR FLANGE DEFLECTOR DETAILS.

SEE DESIGN SHEET 80 FOR DIAPHRAGM SPACINGS.

DESIGN FOR VARIABLE SKEW (L.A.)

2271'-6 × VARI. CONTINUOUS WELDED GIRDER BRIDGE-EBL W/14' BIKE TRAIL

138'-10 & 151'-0⅞ END SPANS MULTIPLE LENGTH INTERIOR SPANS

FRAMING PLAN - UNIT 4

STA. 6792+60.93 - 52' LEFT ℄ I-74 OCTOBER, 2015

SCOTT COUNTY

IOWA DEPARTMENT OF TRANSPORTATION - HIGHWAY DIVISION

DESIGN SHEET NO. 79 OF 282 FILE NO. 30253 DESIGN NO. 3408

whks engineers + planners + land surveyors

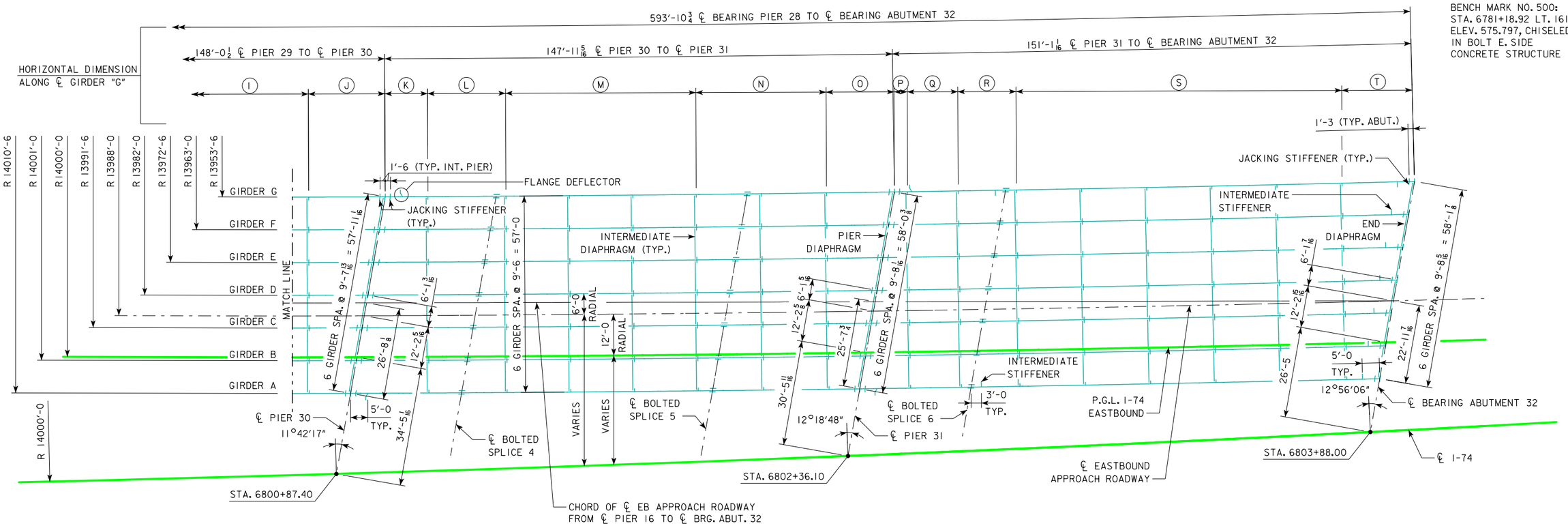

FRAMING PLAN

HORIZONTAL DIAPHRAGM SPACING ALONG CENTERLINE OF GIRDERS

LOCATION	SPAN 28				SPAN 29						SPAN 30					SPAN 31				
	A	B	C	D	E	F	G	H	I	J	K	L	M	N	O	P	Q	R	S	T
GIRDER G	11'-5 3/8	5 @ 21'-6	14'-0	13'-10 7/16	9'-5 3/8	19'-6	3 @ 18'-9	18'-8 1/4	21'-10 15/16	22'-2 15/16	12'-4 3/4	22'-7 7/8	3 @ 18'-5 1/8	2 @ 18'-11 1/16	19'-9 3/16	3'-9 11/16	14'-8 1/4	16'-11 3/16	5 @ 18'-11 1/16	21'-0 9/16
GIRDER F	13'-1 1/2	5 @ 21'-6	14'-0	12'-2 3/8	11'-1 1/2	19'-6	3 @ 18'-9	18'-8 3/8	21'-11 1/8	20'-6 9/16	14'-1 1/2	22'-8 1/16	3 @ 18'-5 1/4	2 @ 18'-11 1/4	17'-11 1/2	5'-7 9/16	14'-8 3/8	16'-11 5/16	5 @ 18'-11 1/4	19'-1 9/16
GIRDER E	14'-9 5/8	5 @ 21'-6	14'-0	10'-6 1/4	12'-9 5/8	19'-6	3 @ 18'-9	18'-8 1/2	21'-11 5/16	18'-10 1/8	15'-10 3/16	22'-8 1/4	3 @ 18'-5 3/8	2 @ 18'-11 3/8	16'-1 13/16	7'-5 7/16	14'-8 1/2	16'-11 7/16	5 @ 18'-11 3/8	17'-2 5/8
GIRDER D	16'-5 11/16	5 @ 21'-6	14'-0	8'-10 1/8	14'-5 11/16	19'-6	3 @ 18'-9	18'-8 5/8	21'-11 7/16	17'-1 11/16	17'-6 7/8	22'-8 7/16	3 @ 18'-5 9/16	2 @ 18'-11 9/16	14'-4 1/8	9'-3 3/8	14'-8 5/8	16'-11 9/16	5 @ 18'-11 9/16	15'-3 11/16
GIRDER C	18'-1 13/16	5 @ 21'-6	14'-0	7'-2 1/16	16'-1 13/16	19'-6	3 @ 18'-9	18'-8 3/4	21'-11 5/8	15'-5 1/4	19'-3 5/8	22'-8 5/8	3 @ 18'-5 11/16	2 @ 18'-11 11/16	12'-6 7/16	11'-1 1/4	14'-8 3/4	16'-11 3/4	5 @ 18'-11 11/16	13'-4 11/16
GIRDER B	19'-9 7/8	5 @ 21'-6	14'-0	5'-5 15/16	17'-9 7/8	19'-6	3 @ 18'-9	18'-8 7/8	21'-11 13/16	13'-8 7/8	21'-0 5/16	22'-8 13/16	3 @ 18'-5 7/8	2 @ 18'-11 7/8	10'-8 3/4	12'-11 1/8	14'-8 7/8	16'-11 7/8	5 @ 18'-11 7/8	11'-5 3/4
GIRDER A	21'-6	5 @ 21'-6	14'-0	3'-9 7/8	19'-6	19'-6	3 @ 18'-9	18'-9	22'-0	12'-0 7/16	22'-9	22'-9	3 @ 18'-6	2 @ 19'-0	8'-11 1/16	14'-9	14'-9	17'-0	5 @ 19'-0	9'-6 3/4

SEE DESIGN SHEET 79 FOR FRAMING PLAN NOTES.

whks
engineers + planners + land surveyors

DESIGN FOR VARIABLE SKEW (L.A.)

2271'-6 x VARI. CONTINUOUS WELDED GIRDER BRIDGE-EBL W/14' BIKE TRAIL

138'-10 & 151'-0⅞ END SPANS MULTIPLE LENGTH INTERIOR SPANS

FRAMING PLAN - UNIT 4

STA. 6792+60.93 - 52' LEFT ℄ I-74 OCTOBER, 2015

SCOTT COUNTY

IOWA DEPARTMENT OF TRANSPORTATION - HIGHWAY DIVISION

DESIGN SHEET NO. 80 OF 282 FILE NO. 30253 DESIGN NO. 3408

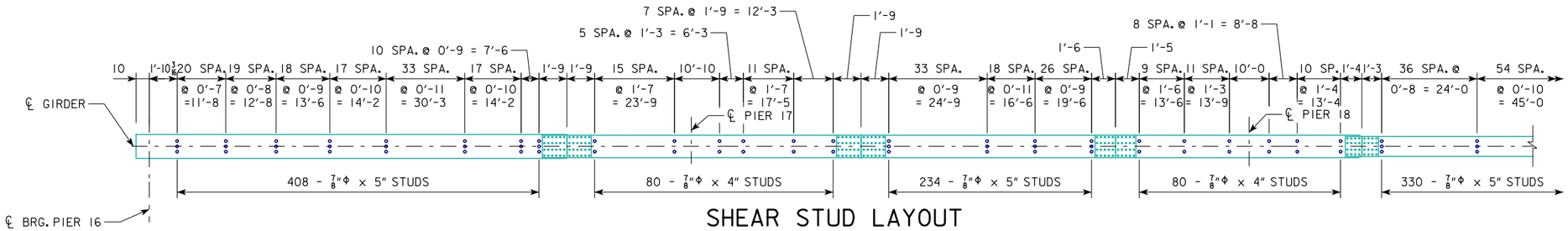

SHEAR STUD LAYOUT

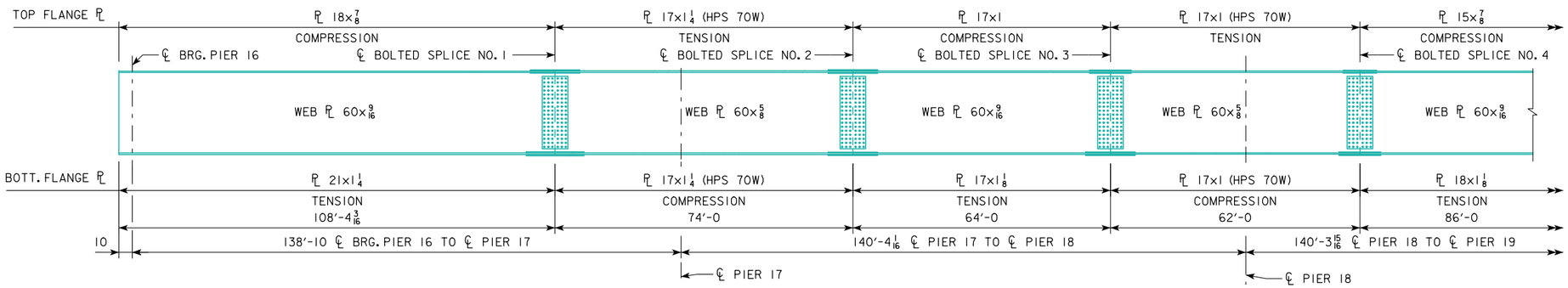

PART GIRDER A ELEVATION

(SHEAR STUDS NOT SHOWN)

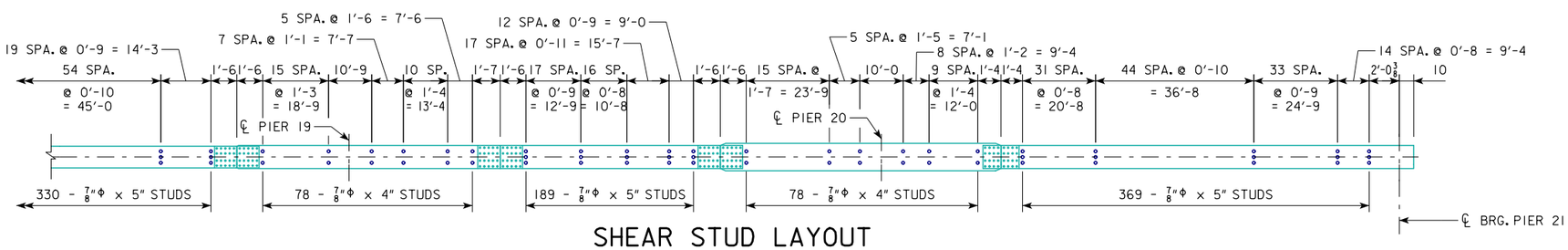

SHEAR STUD LAYOUT

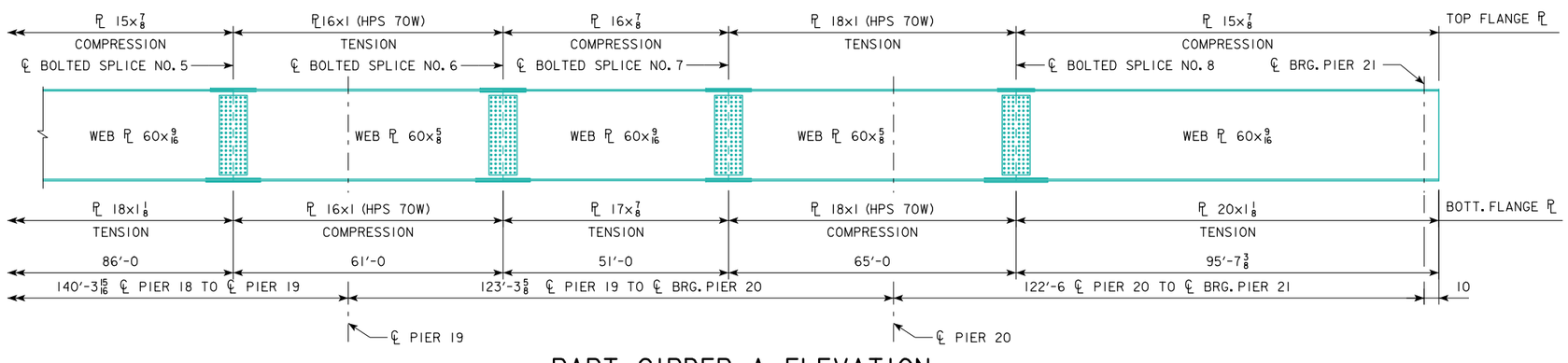

PART GIRDER A ELEVATION

(SHEAR STUDS NOT SHOWN)

NOTES:

DIMENSIONS ARE HORIZONTAL ALONG ℄ GIRDER UNLESS OTHERWISE NOTED OR SHOWN.

SEE DESIGN SHEETS 74-76 FOR INTERMEDIATE DIAPHRAGM AND STIFFENER LOCATIONS.

SEE DESIGN SHEETS 103 & 104 FOR GIRDER SPLICE DETAILS.

SEE DESIGN SHEET 97 FOR GIRDER NOTES.

SEE DESIGN SHEET 97 FOR SHEAR STUD DETAIL.

whks
engineers + planners + land surveyors

DESIGN FOR VARIABLE SKEW (L.A.)

2271'-6 x VARI. CONTINUOUS WELDED GIRDER BRIDGE-EBL W/14' BIKE TRAIL

138'-10 & 151'-0 7/8 END SPANS MULTIPLE LENGTH INTERIOR SPANS

GIRDER A DETAILS - UNIT 1

STA. 6792+60.93 - 52' LEFT ℄ I-74 OCTOBER, 2015

SCOTT COUNTY

IOWA DEPARTMENT OF TRANSPORTATION - HIGHWAY DIVISION

DESIGN SHEET NO. 81 OF 282 FILE NO. 30253 DESIGN NO. 3408

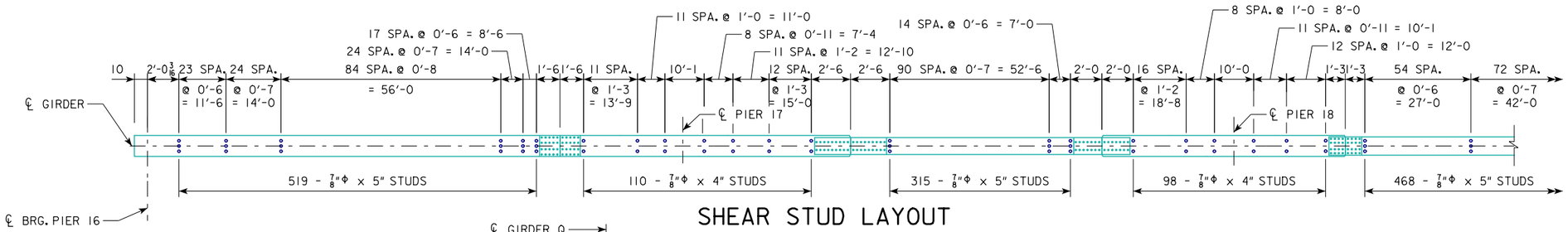

SHEAR STUD LAYOUT

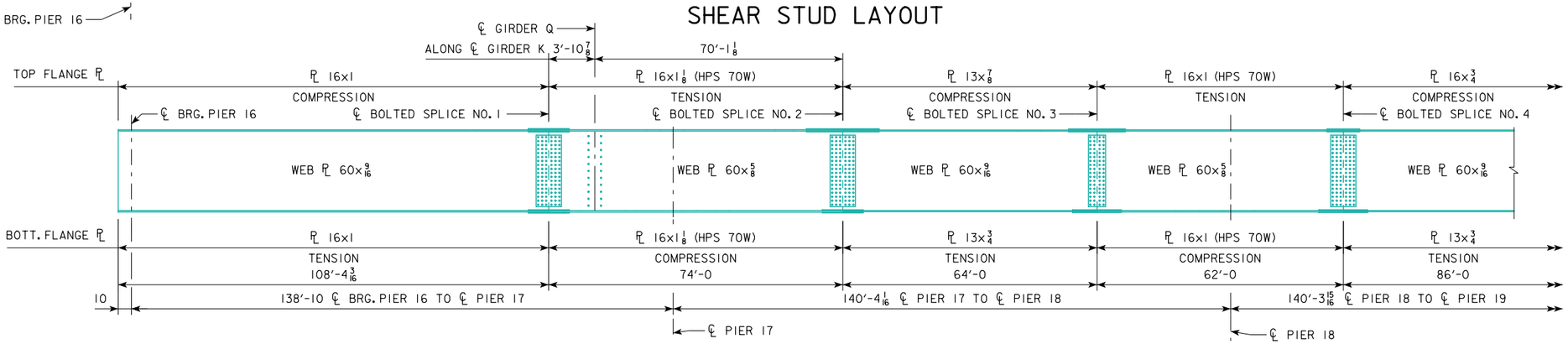

PART GIRDER B-K ELEVATION

(SHEAR STUDS NOT SHOWN)

℄ GIRDER Q BOLT HOLES ARE ONLY LOCATED ON GIRDER K, NOT GIRDERS B-J.

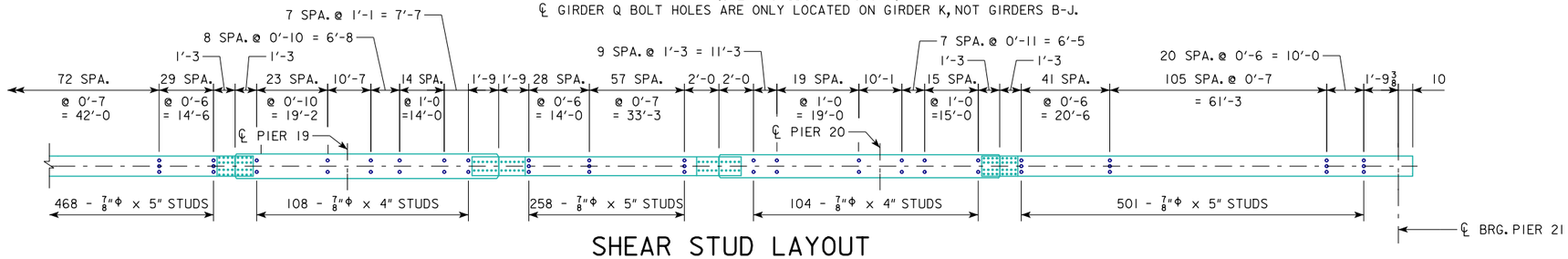

SHEAR STUD LAYOUT

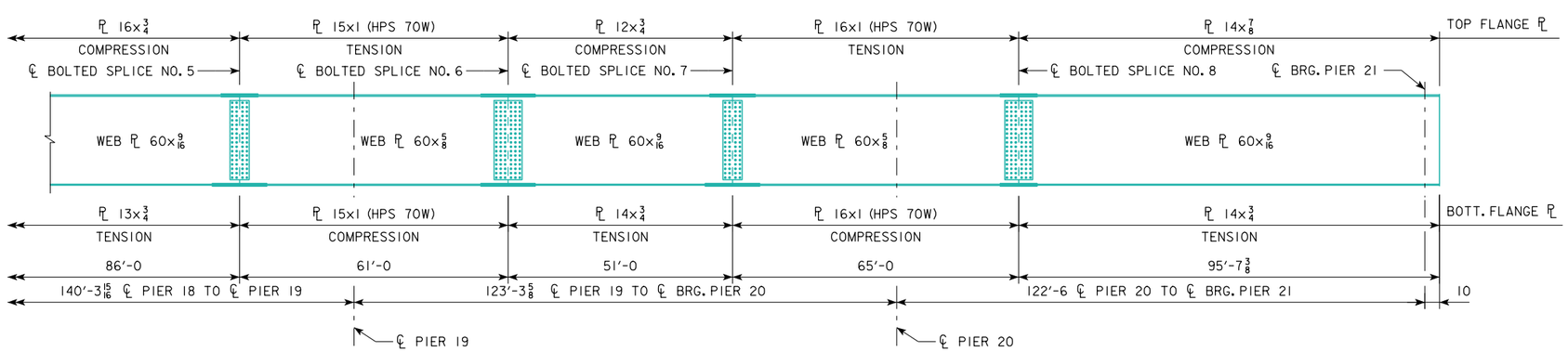

PART GIRDER B-K ELEVATION

(SHEAR STUDS NOT SHOWN)

NOTES:

DIMENSIONS ARE HORIZONTAL ALONG ℄ GIRDER UNLESS OTHERWISE NOTED OR SHOWN.

SEE DESIGN SHEETS 74-76 FOR INTERMEDIATE DIAPHRAGM AND STIFFENER LOCATIONS.

SEE DESIGN SHEETS 105 & 106 FOR GIRDER SPLICE DETAILS.

SEE DESIGN SHEET 97 FOR GIRDER NOTES.

SEE DESIGN SHEET 97 FOR SHEAR STUD DETAIL.

whks
engineers + planners + land surveyors

DESIGN FOR VARIABLE SKEW (L.A.)

2271'-6 x VARI. CONTINUOUS WELDED GIRDER BRIDGE-EBL W/14' BIKE TRAIL

138'-10 & 151'-0 7/8 END SPANS MULTIPLE LENGTH INTERIOR SPANS

GIRDERS B-K DETAILS - UNIT 1

STA. 6792+60.93 - 52' LEFT ℄ I-74 OCTOBER, 2015

SCOTT COUNTY

IOWA DEPARTMENT OF TRANSPORTATION - HIGHWAY DIVISION

DESIGN SHEET NO. 82 OF 282 FILE NO. 30253 DESIGN NO. 3408

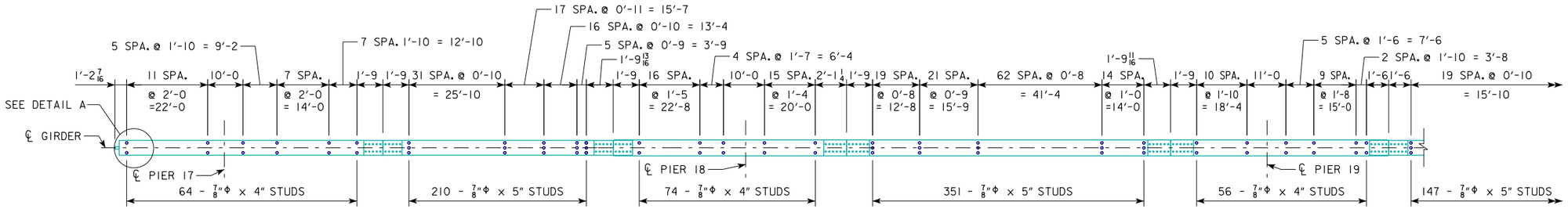

SHEAR STUD LAYOUT

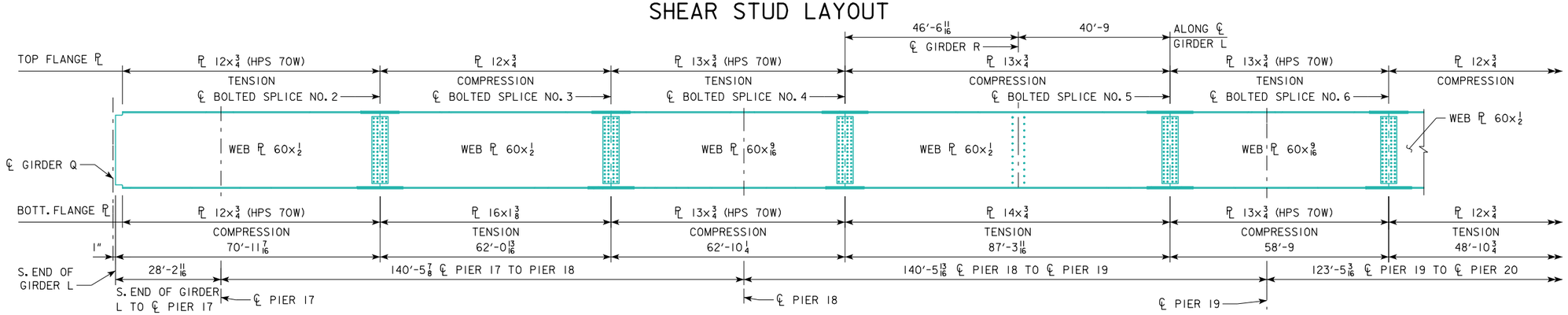

PART GIRDER L ELEVATION

(SHEAR STUDS NOT SHOWN)

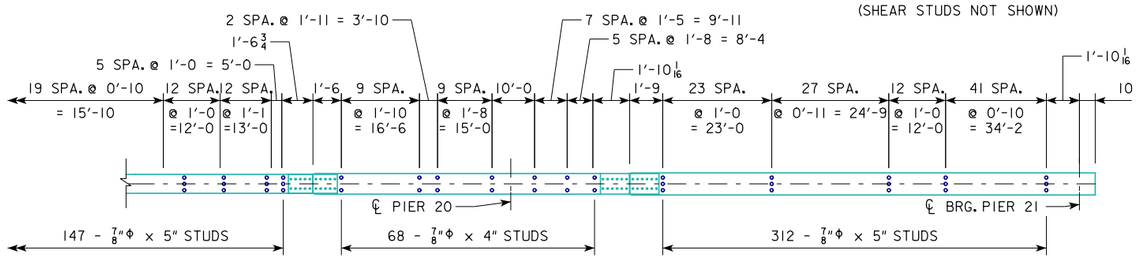

SHEAR STUD LAYOUT

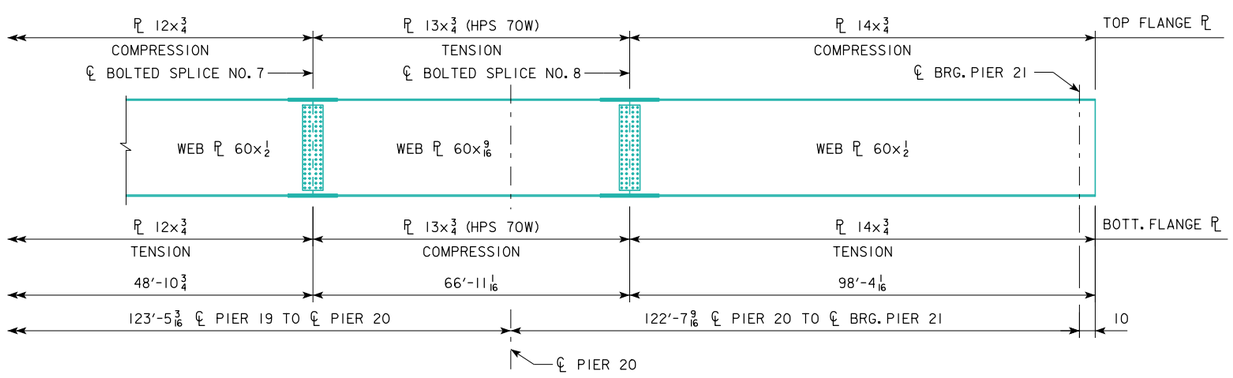

PART GIRDER L ELEVATION

(SHEAR STUDS NOT SHOWN)

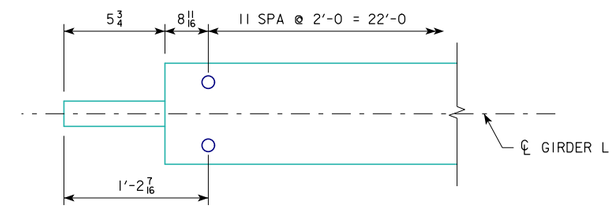

DETAIL A

NOTES:

DIMENSIONS ARE HORIZONTAL ALONG ℄ GIRDER UNLESS OTHERWISE NOTED OR SHOWN.

SEE DESIGN SHEETS 74-76 FOR INTERMEDIATE DIAPHRAGM AND STIFFENER LOCATIONS.

SEE DESIGN SHEETS 107 & 108 FOR GIRDER SPLICE DETAILS.

SEE DESIGN SHEET 97 FOR GIRDER NOTES.

SEE DESIGN SHEET 97 FOR SHEAR STUD DETAIL.

SEE DESIGN SHEET 87 FOR SOUTH END OF GIRDER L DETAILS.

SEE DESIGN SHEET 86 FOR GIRDERS Q & R DETAILS.

whks
engineers + planners + land surveyors

DESIGN FOR VARIABLE SKEW (L.A.)

2271'-6 x VARI. CONTINUOUS WELDED GIRDER BRIDGE-EBL W/14' BIKE TRAIL

138'-10 & 151'-0 7/8 END SPANS MULTIPLE LENGTH INTERIOR SPANS

GIRDER L DETAILS - UNIT 1

STA. 6792+60.93 - 52' LEFT ℄ I-74 OCTOBER, 2015

SCOTT COUNTY

IOWA DEPARTMENT OF TRANSPORTATION - HIGHWAY DIVISION

DESIGN SHEET NO. 83 OF 282 FILE NO. 30253 DESIGN NO. 3408

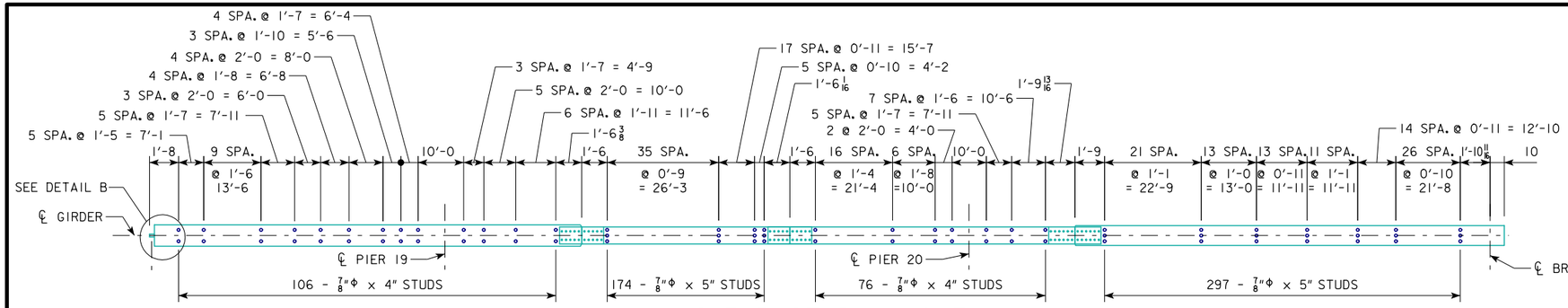

SHEAR STUD LAYOUT

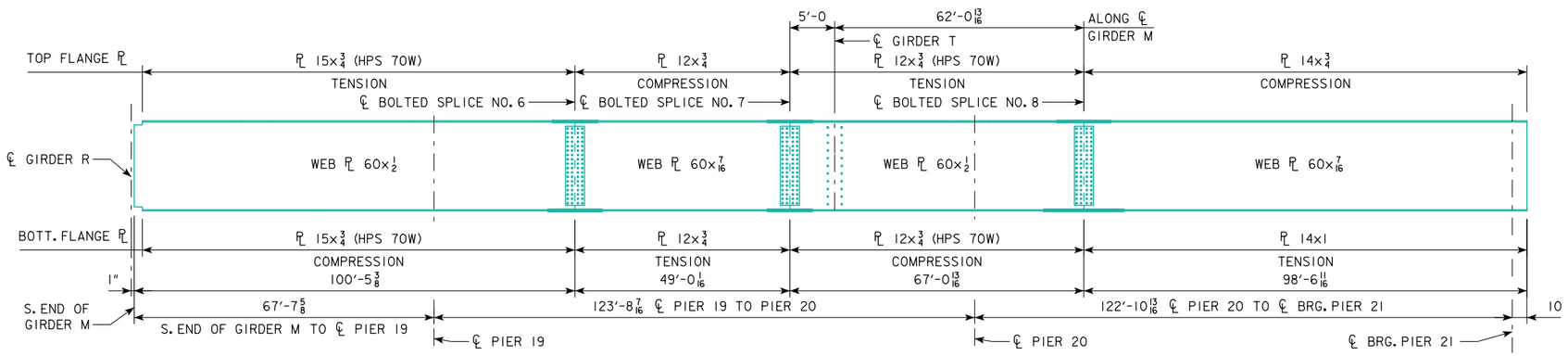

PART GIRDER M ELEVATION

(SHEAR STUDS NOT SHOWN)

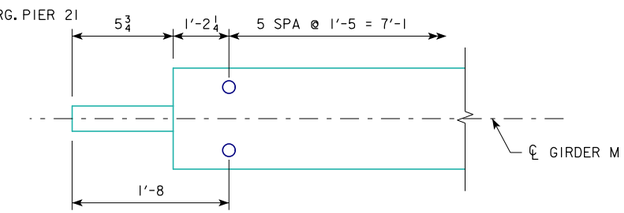

DETAIL B

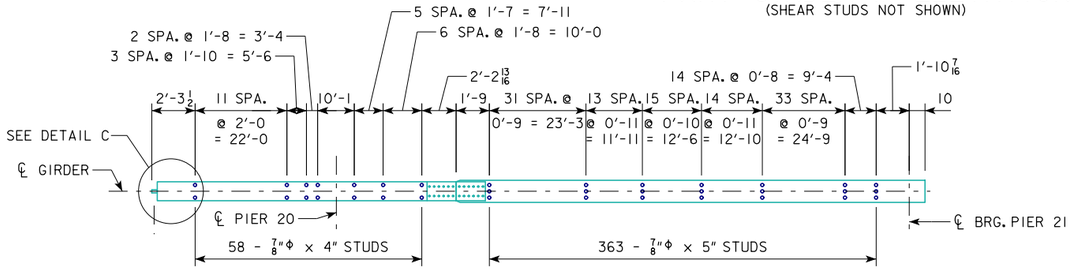

SHEAR STUD LAYOUT

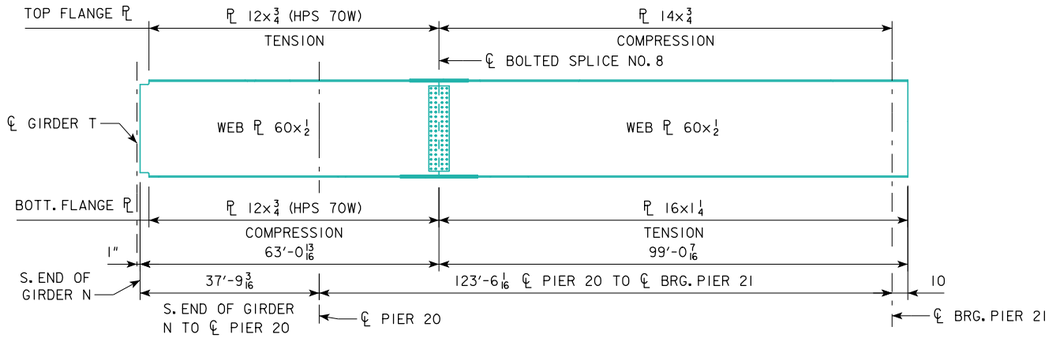

PART GIRDER N ELEVATION

(SHEAR STUDS NOT SHOWN)

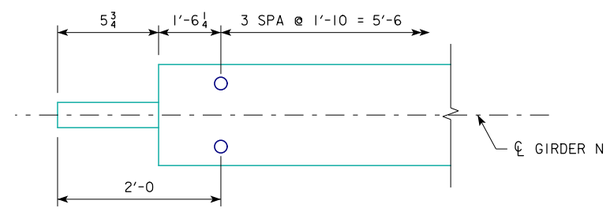

DETAIL C

NOTES:

DIMENSIONS ARE HORIZONTAL ALONG ℄ GIRDER UNLESS OTHERWISE NOTED OR SHOWN.

SEE DESIGN SHEETS 74 - 76FOR INTERMEDIATE DIAPHRAGM AND STIFFENER LOCATIONS.

SEE DESIGN SHEET 109 FOR GIRDER SPLICE DETAILS.

SEE DESIGN SHEET 97 FOR GIRDER NOTES.

SEE DESIGN SHEET 97 FOR SHEAR STUD DETAIL.

SEE DESIGN SHEET 87 FOR SOUTH END OF GIRDER M & N DETAILS

SEE DESIGN SHEETS 86 & 87 FOR GIRDERS R & T DETAILS

whks
engineers + planners + land surveyors

DESIGN FOR VARIABLE SKEW (L.A.)

2271'-6 x VARI. CONTINUOUS WELDED GIRDER BRIDGE-EBL W/14' BIKE TRAIL

138'-10 & 151'-0 7/8 END SPANS MULTIPLE LENGTH INTERIOR SPANS

GIRDERS M & N DETAILS-UNIT 1

STA. 6792+60.93 - 52' LEFT ℄ I-74 OCTOBER, 2015

SCOTT COUNTY

IOWA DEPARTMENT OF TRANSPORTATION - HIGHWAY DIVISION

DESIGN SHEET NO. 84 OF 282 FILE NO. 30253 DESIGN NO. 3408

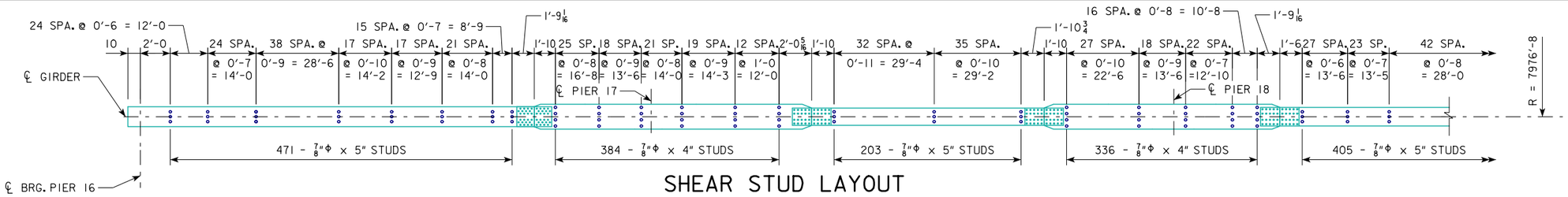

SHEAR STUD LAYOUT

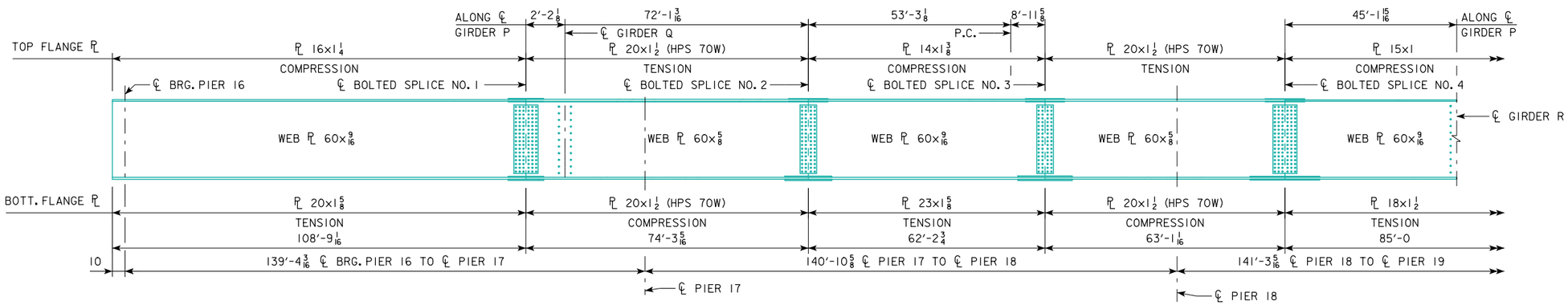

PART GIRDER P ELEVATION

(SHEAR STUDS NOT SHOWN)

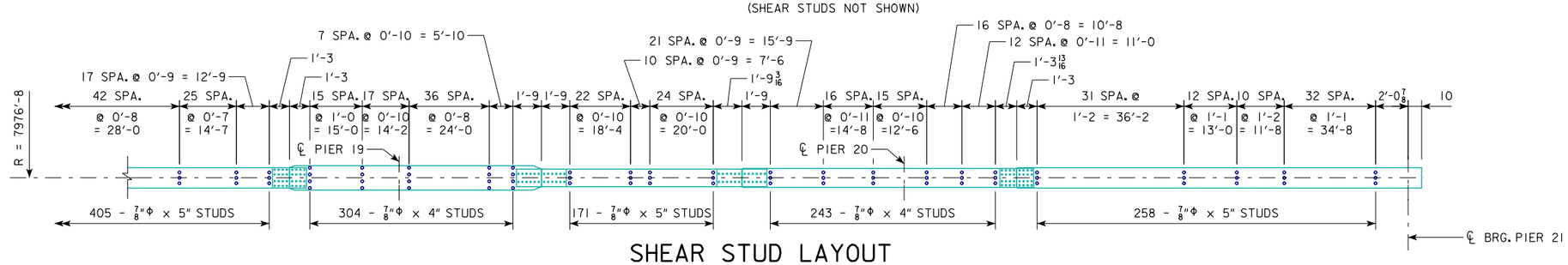

SHEAR STUD LAYOUT

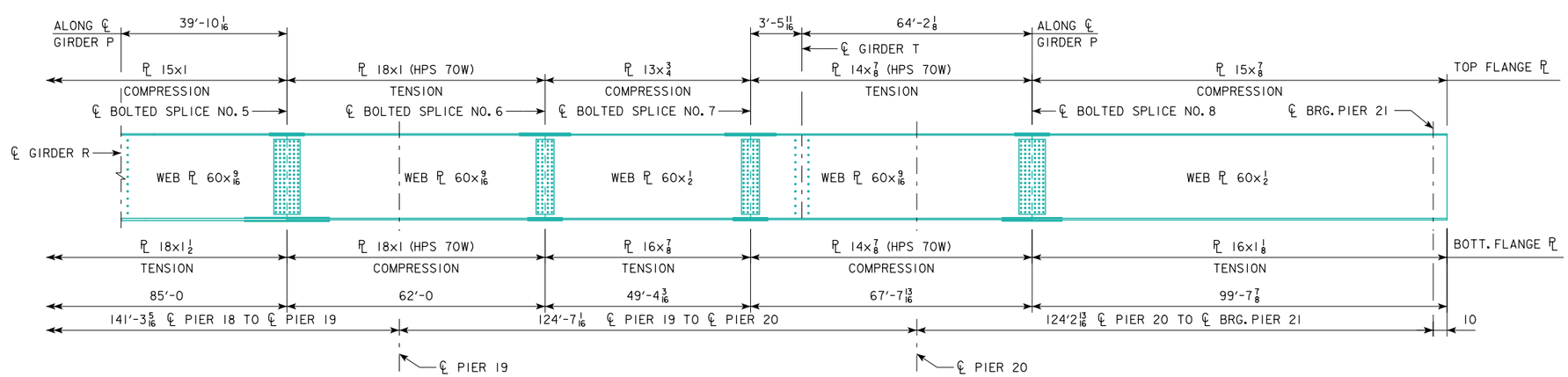

PART GIRDER P ELEVATION

(SHEAR STUDS NOT SHOWN)

NOTES:

DIMENSIONS ARE HORIZONTAL ALONG ℄ GIRDER UNLESS OTHERWISE NOTED OR SHOWN.

SEE DESIGN SHEETS 74-76 FOR INTERMEDIATE DIAPHRAGM AND STIFFENER LOCATIONS.

SEE DESIGN SHEETS 110 & 111 FOR GIRDER SPLICE DETAILS.

SEE DESIGN SHEET 97 FOR GIRDER NOTES.

SEE DESIGN SHEET 97 FOR SHEAR STUD DETAIL.

SEE DESIGN SHEETS 86 & 87 FOR GIRDERS Q, R, & T DETAILS.

whks
engineers + planners + land surveyors

DESIGN FOR VARIABLE SKEW (L.A.)

2271'-6 x VARI. CONTINUOUS WELDED GIRDER BRIDGE-EBL W/14' BIKE TRAIL

138'-10 & 151'-0 7/8 END SPANS MULTIPLE LENGTH INTERIOR SPANS

GIRDER P DETAILS - UNIT 1

STA. 6792+60.93 - 52' LEFT ℄ I-74 OCTOBER, 2015

SCOTT COUNTY

IOWA DEPARTMENT OF TRANSPORTATION - HIGHWAY DIVISION

DESIGN SHEET NO. 85 OF 282 FILE NO. 30253 DESIGN NO. 3408

DESIGN TEAM MG / BB / CF	SCOTT COUNTY	PROJECT NUMBER BRFIM-074-1(200)5--05-82	SHEET NUMBER 86

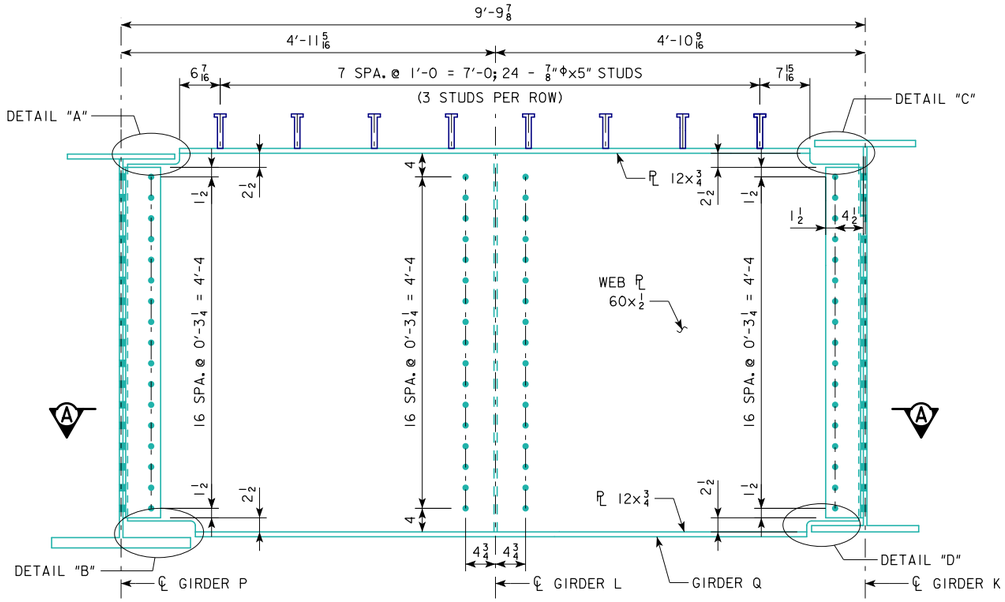

GIRDER Q ELEVATION

NOTE: GIRDER Q IS TO BE SET LEVEL.
(LOOKING NORTH)

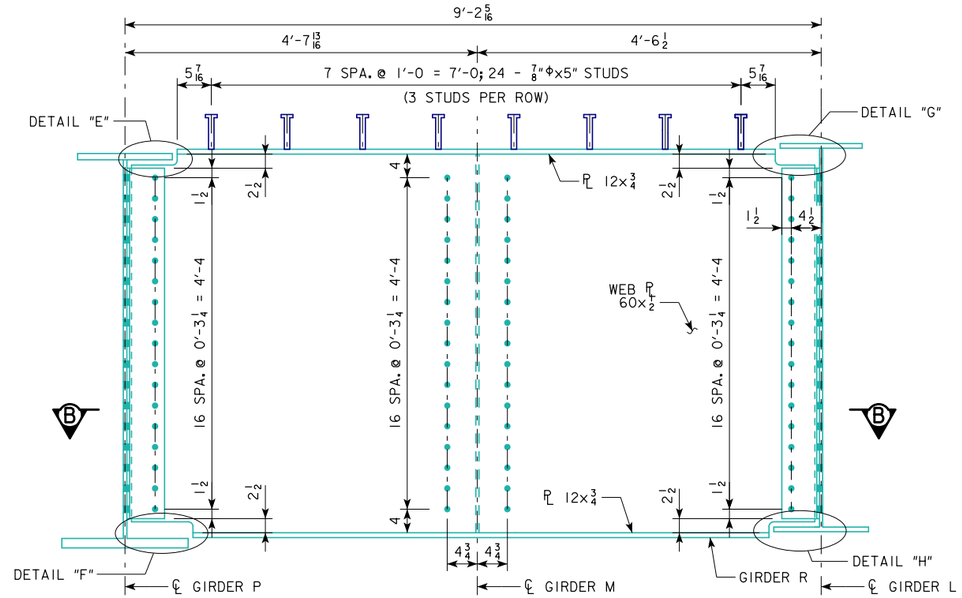

GIRDER R ELEVATION

NOTE: GIRDER R IS TO BE SET LEVEL.
(LOOKING NORTH)

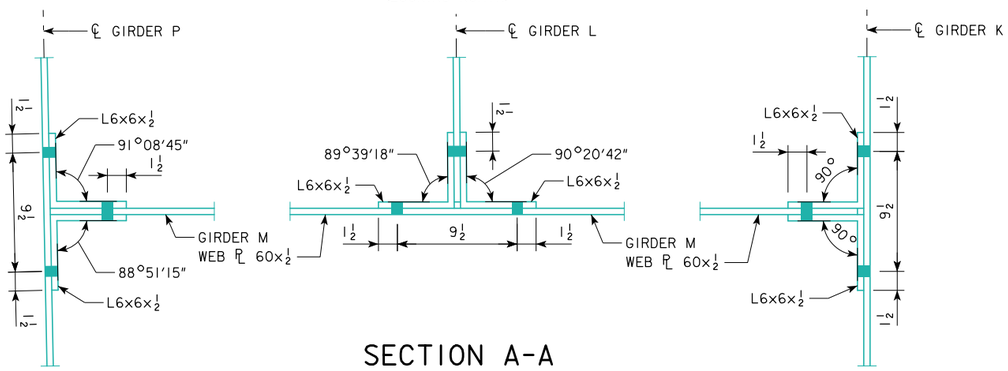

SECTION A-A

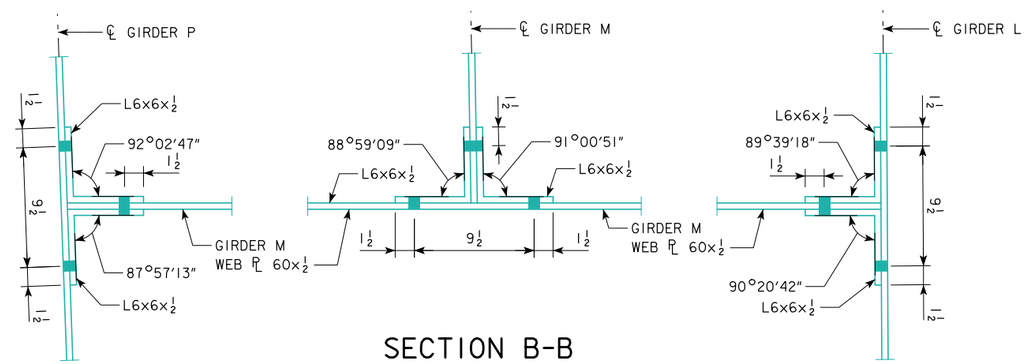

SECTION B-B

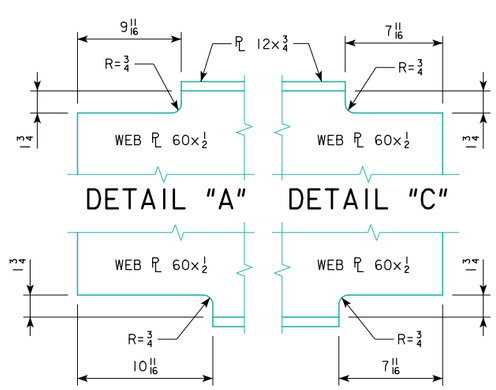

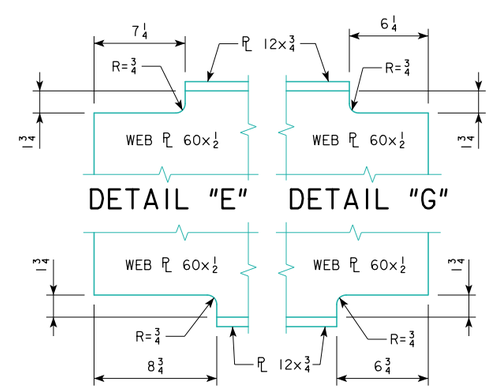

whks
engineers + planners + land surveyors

DESIGN FOR VARIABLE SKEW (L.A.)

2271'-6 x VARI. CONTINUOUS WELDED GIRDER BRIDGE-EBL W/14' BIKE TRAIL

138'-10 & 151'-0 7/8 END SPANS MULTIPLE LENGTH INTERIOR SPANS

GIRDER DETAILS - UNIT 1

STA. 6792+60.93 - 52' LEFT ℄ I-74 OCTOBER, 2015

SCOTT COUNTY

IOWA DEPARTMENT OF TRANSPORTATION - HIGHWAY DIVISION

DESIGN SHEET NO. 86 OF 282 FILE NO. 30253 DESIGN NO. 3408

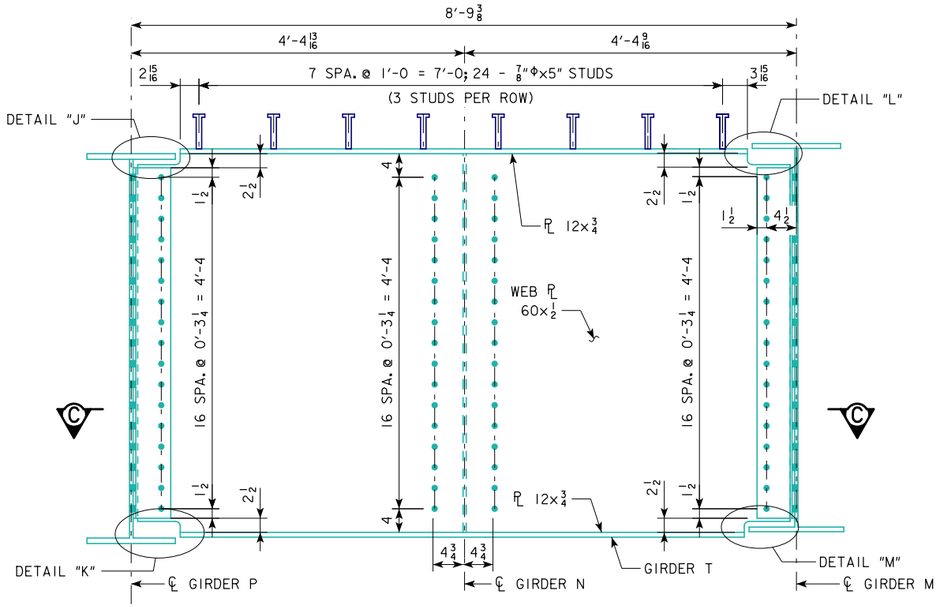

GIRDER T ELEVATION

NOTE: GIRDER T IS TO BE SET LEVEL.
(LOOKING NORTH)

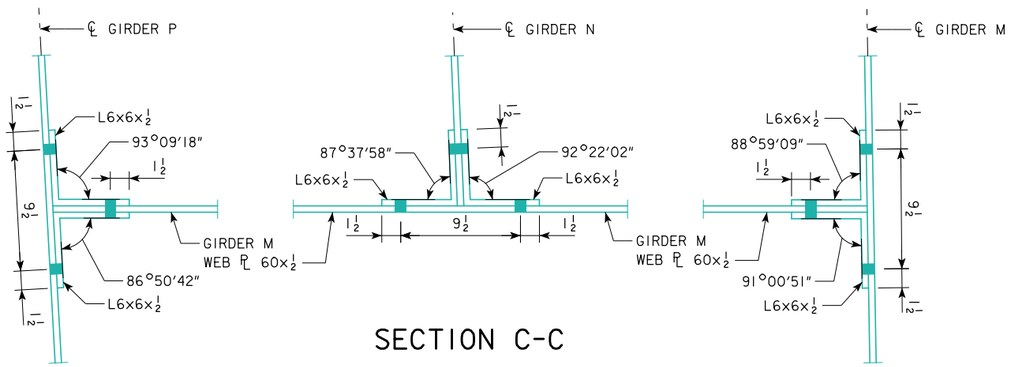

SECTION C-C

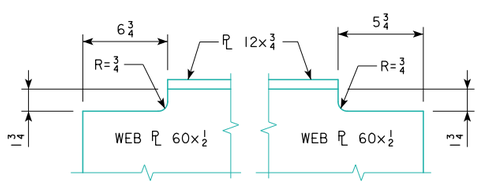

DETAIL "J" DETAIL "L"

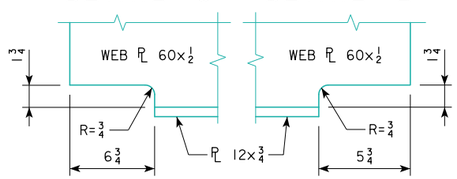

DETAIL "K" DETAIL "M"

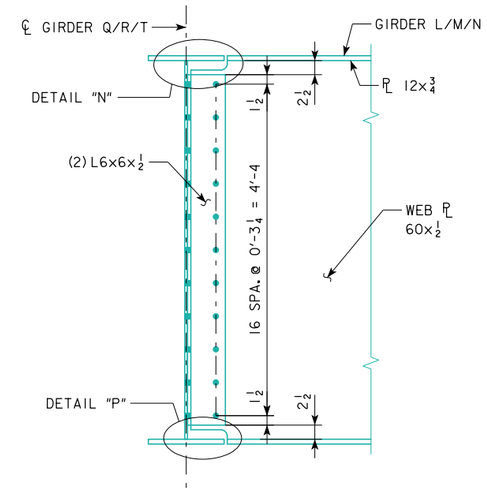

GIRDERS L, M, & N END DETAIL

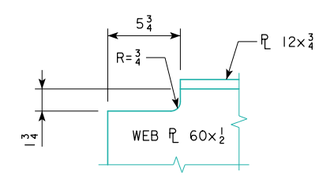

DETAIL "N"

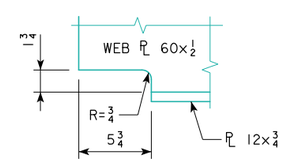

DETAIL "P"

whks
engineers + planners + land surveyors

DESIGN FOR VARIABLE SKEW (L.A.)

2271'-6 x VARI. CONTINUOUS WELDED GIRDER BRIDGE-EBL W/14' BIKE TRAIL

138'-10 & 151'-0 7/8 END SPANS MULTIPLE LENGTH INTERIOR SPANS

GIRDER DETAILS - UNIT 1

STA. 6792+60.93 - 52' LEFT ℄ I-74 OCTOBER, 2015

SCOTT COUNTY

IOWA DEPARTMENT OF TRANSPORTATION - HIGHWAY DIVISION

DESIGN SHEET NO. 87 OF 282 FILE NO. 30253 DESIGN NO. 3408

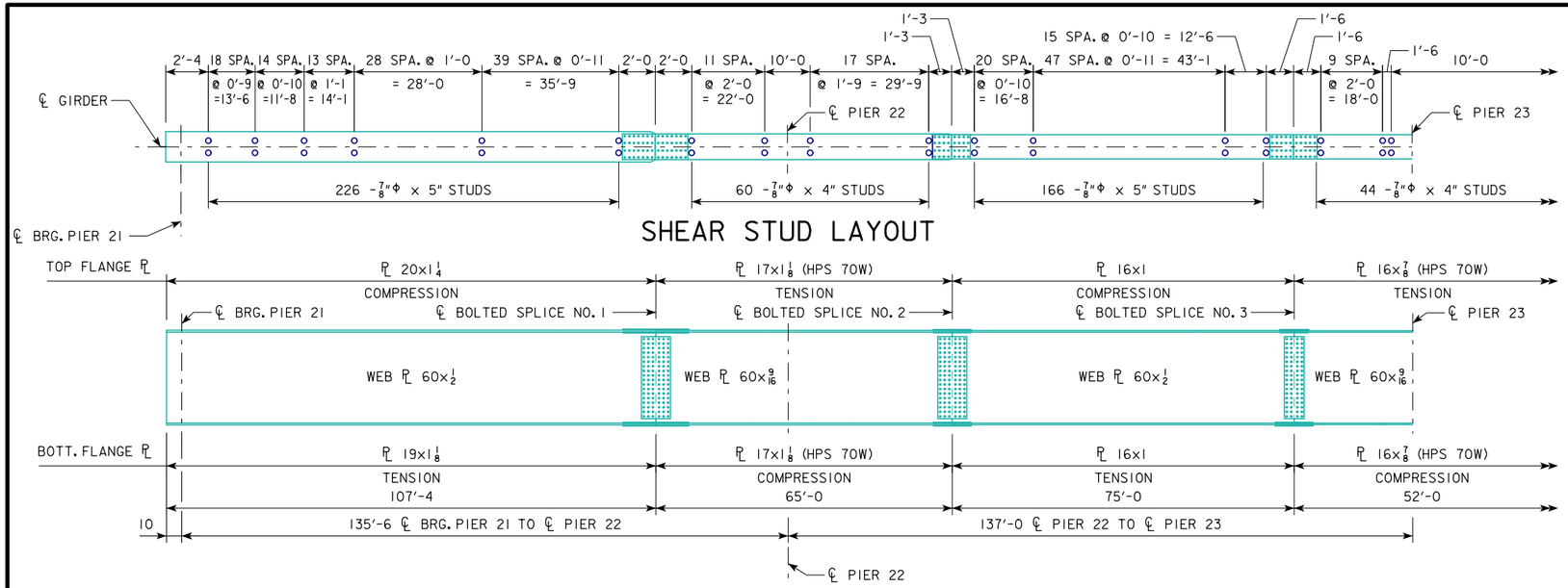

SHEAR STUD LAYOUT

PART GIRDERS A & G ELEVATION

(SHEAR STUDS NOT SHOWN)

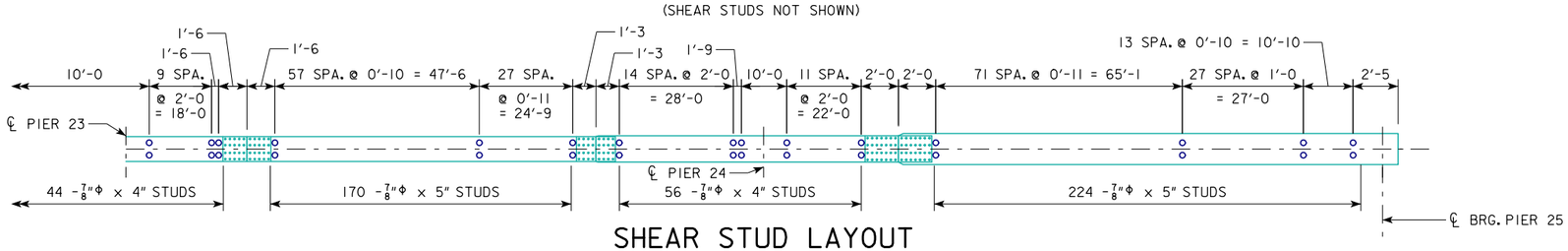

SHEAR STUD LAYOUT

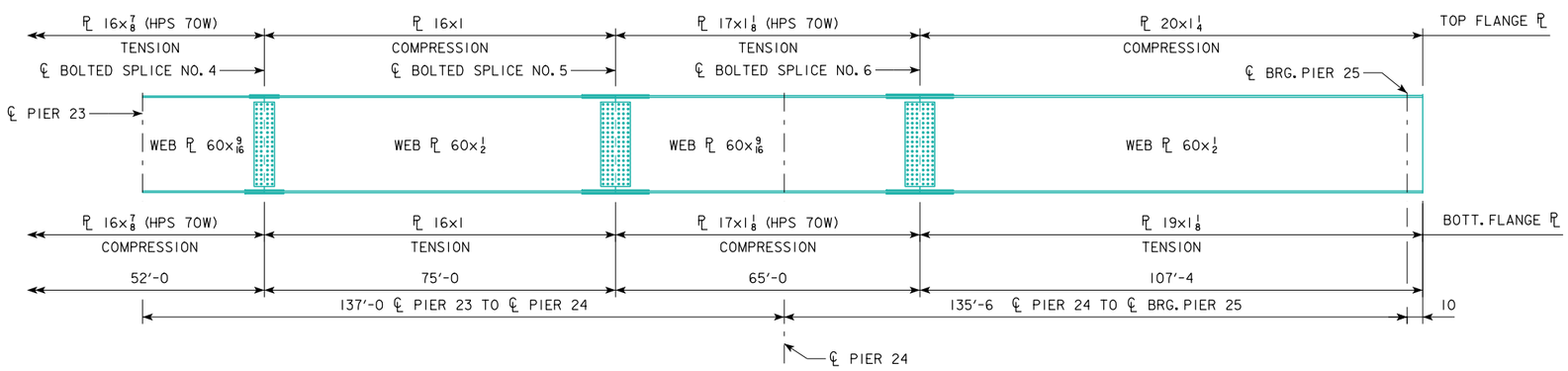

PART GIRDERS A & G ELEVATION

(SHEAR STUDS NOT SHOWN)

NOTES:
DIMENSIONS ARE HORIZONTAL ALONG ℄ GIRDER UNLESS OTHERWISE NOTED OR SHOWN.

SEE DESIGN SHEET 77 FOR INTERMEDIATE DIAPHRAGM AND STIFFENER LOCATIONS.

SEE DESIGN SHEETS 112 & 113 FOR GIRDER SPLICE DETAILS.

SEE DESIGN SHEET 97 FOR GIRDER NOTES.

SEE DESIGN SHEET 97 FOR SHEAR STUD DETAIL.

whks
engineers + planners + land surveyors

DESIGN FOR VARIABLE SKEW (L.A.)

2271'-6 x VARI. CONTINUOUS WELDED GIRDER BRIDGE-EBL W/14' BIKE TRAIL

138'-10 & 151'-0 7/8 END SPANS MULTIPLE LENGTH INTERIOR SPANS

GIRDERS A & G DETAILS-UNIT 2

STA. 6792+60.93 - 52' LEFT ℄ I-74 OCTOBER, 2015

SCOTT COUNTY

IOWA DEPARTMENT OF TRANSPORTATION - HIGHWAY DIVISION

DESIGN SHEET NO. 88 OF 282 FILE NO. 30253 DESIGN NO. 3408

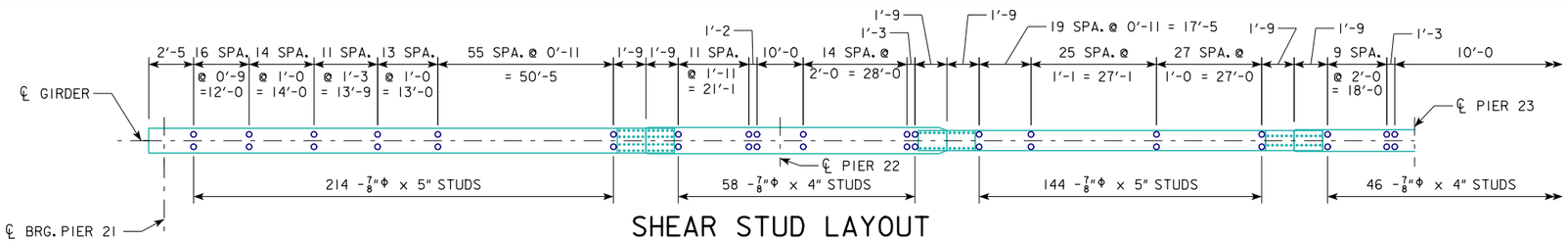

SHEAR STUD LAYOUT

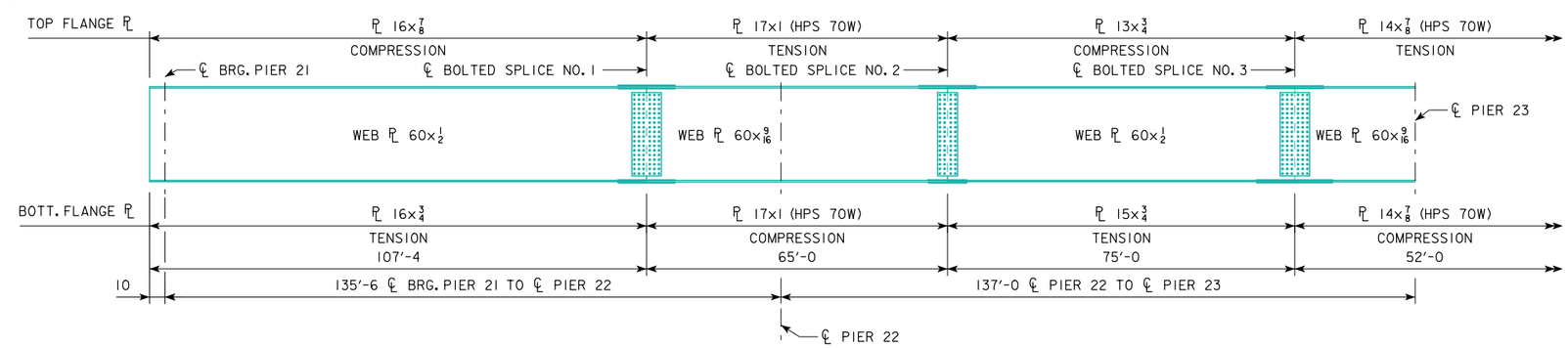

PART GIRDERS B THRU F ELEVATION

(SHEAR STUDS NOT SHOWN)

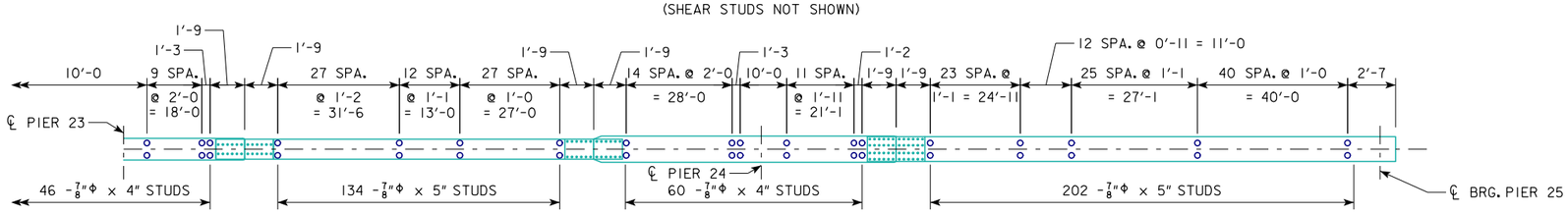

SHEAR STUD LAYOUT

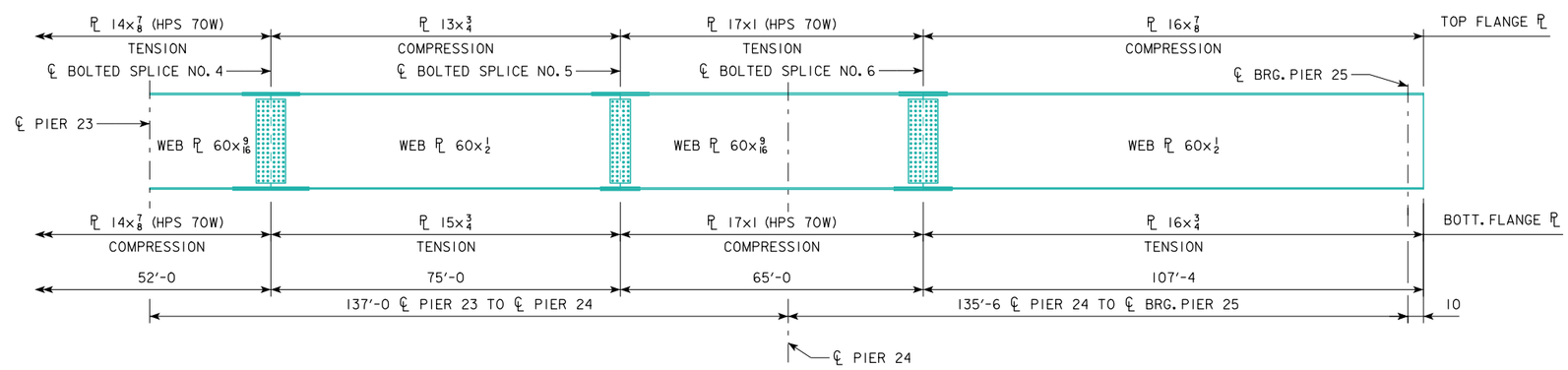

PART GIRDERS B THRU F ELEVATION

(SHEAR STUDS NOT SHOWN)

NOTES:
DIMENSIONS ARE HORIZONTAL ALONG ℄ GIRDER UNLESS OTHERWISE NOTED OR SHOWN.

SEE DESIGN SHEET 77 FOR INTERMEDIATE DIAPHRAGM AND STIFFENER LOCATIONS.

SEE DESIGN SHEETS 114 & 115 FOR GIRDER SPLICE DETAILS.

SEE DESIGN SHEET 97 FOR GIRDER NOTES.

SEE DESIGN SHEET 97 FOR SHEAR STUD DETAIL.

whks
engineers + planners + land surveyors

DESIGN FOR VARIABLE SKEW (L.A.)

2271'-6 x VARI. CONTINUOUS WELDED GIRDER BRIDGE-EBL W/14' BIKE TRAIL

138'-10 & 151'-0 7/8 END SPANS MULTIPLE LENGTH INTERIOR SPANS

GIRDERS B-F DETAILS - UNIT 2

STA. 6792+60.93 - 52' LEFT ℄ I-74 OCTOBER, 2015

SCOTT COUNTY

IOWA DEPARTMENT OF TRANSPORTATION - HIGHWAY DIVISION

DESIGN SHEET NO. 89 OF 282 FILE NO. 30253 DESIGN NO. 3408

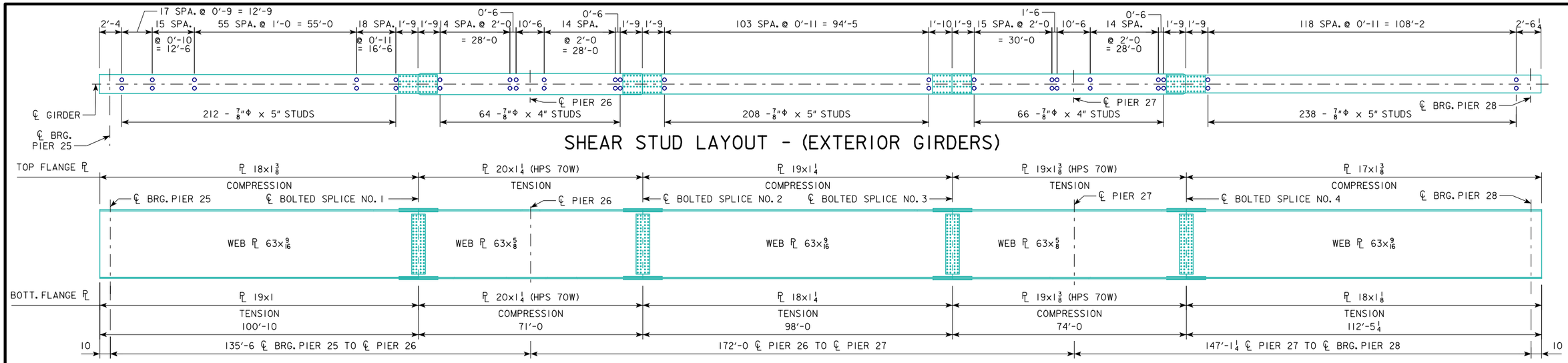

SHEAR STUD LAYOUT - (EXTERIOR GIRDERS)

GIRDERS A & G ELEVATION - (EXTERIOR GIRDERS)

(SHEAR STUDS NOT SHOWN)

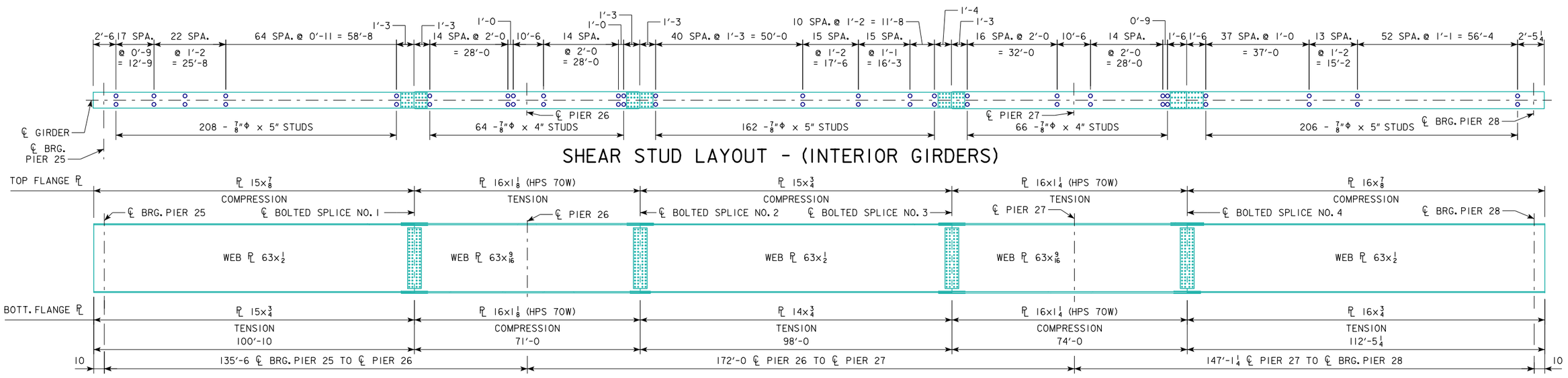

SHEAR STUD LAYOUT - (INTERIOR GIRDERS)

GIRDERS B - F ELEVATION - (INTERIOR GIRDERS)

(SHEAR STUDS NOT SHOWN)

NOTES:
DIMENSIONS ARE HORIZONTAL ALONG ℄ GIRDER UNLESS OTHERWISE NOTED OR SHOWN.

SEE DESIGN SHEET 78 FOR INTERMEDIATE DIAPHRAGM AND STIFFENER LOCATIONS.

SEE DESIGN SHEETS 116 & 117 FOR GIRDER SPLICE DETAILS.

SEE DESIGN SHEET 97 FOR GIRDER NOTES.

SEE DESIGN SHEET 97 FOR SHEAR STUD DETAIL.

whks
engineers + planners + land surveyors

DESIGN FOR VARIABLE SKEW (L.A.)

2271'-6 x VARI. CONTINUOUS WELDED GIRDER BRIDGE-EBL W/14' BIKE TRAIL

138'-10 & 151'-0 7/8 END SPANS MULTIPLE LENGTH INTERIOR SPANS

GIRDER DETAILS - UNIT 3

STA. 6792+60.93 - 52' LEFT ℄ I-74 OCTOBER, 2015

SCOTT COUNTY

IOWA DEPARTMENT OF TRANSPORTATION - HIGHWAY DIVISION

DESIGN SHEET NO. 90 OF 282 FILE NO. 30253 DESIGN NO. 3408

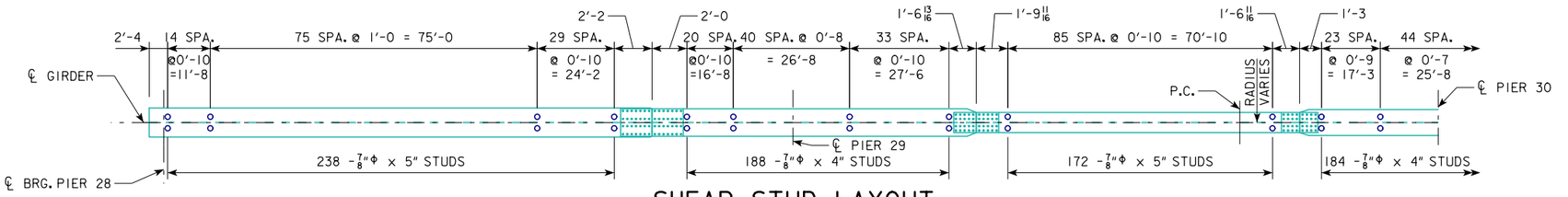

SHEAR STUD LAYOUT

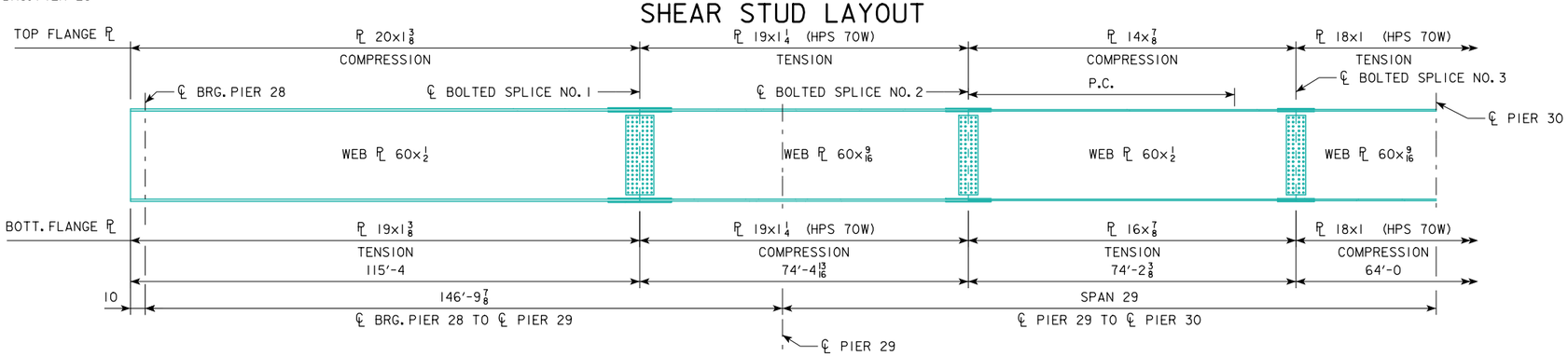

PART GIRDERS A & G ELEVATION

(SHEAR STUDS NOT SHOWN)

EXTERIOR GIRDER DIMENSIONS		
DIMENSION	GIRDER A	GIRDER G
DIM. A	119'-6 15/16	119'-7 9/16
DIM. B	2'-3 9/16	2'-4 3/16
SPAN 29	148'-0 7/16	148'-0 1/2
SPAN 30	147'-11 1/16	147'-11 5/16
SPAN 31	151'-0 3/4	151'-1 1/16
P.C.	56'-4 5/16	46'-3 11/16

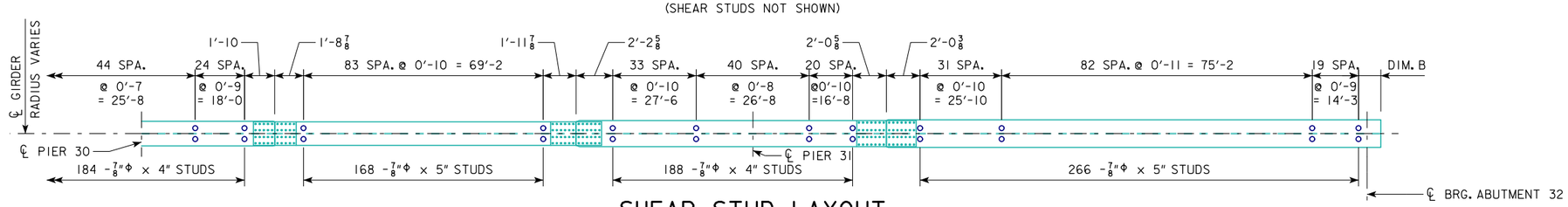

SHEAR STUD LAYOUT

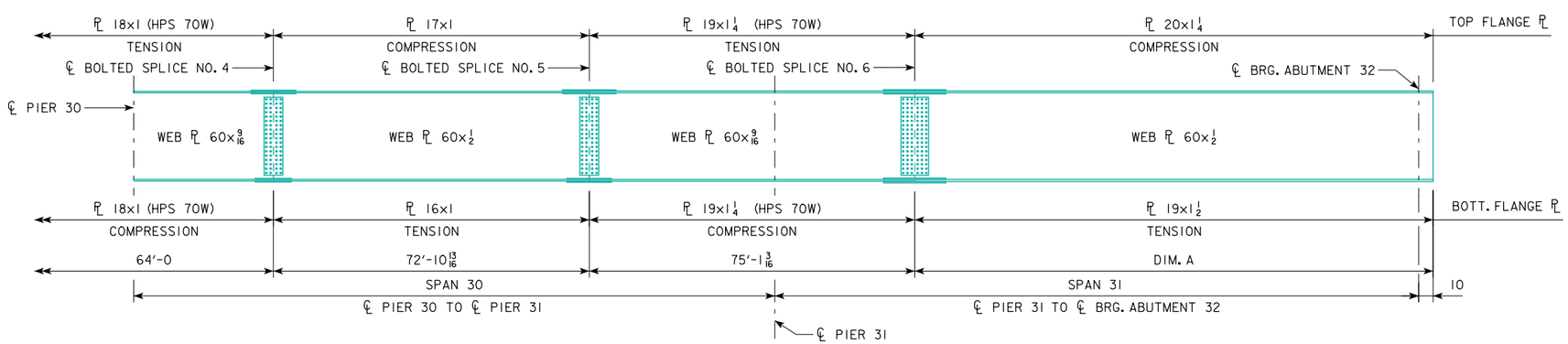

PART GIRDERS A & G ELEVATION

(SHEAR STUDS NOT SHOWN)

NOTES:

DIMENSIONS ARE HORIZONTAL ALONG ℄ GIRDER UNLESS OTHERWISE NOTED OR SHOWN.

SEE DESIGN SHEETS 79 & 80 FOR RADIUS OF CURVED GIRDER SECTIONS AND INTERMEDIATE DIAPHRAGM AND STIFFENER LOCATIONS.

SEE FRAMING PLAN ON DESIGN SHEET 79 FOR LOCATION OF TRANSITION FROM STRAIGHT TO CURVED GIRDER.

SEE DESIGN SHEETS 118 & 119 FOR GIRDER SPLICE DETAILS.

SEE DESIGN SHEET 97 FOR GIRDER NOTES.

SEE DESIGN SHEET 97 FOR SHEAR STUD DETAILS.

whks
engineers + planners + land surveyors

DESIGN FOR VARIABLE SKEW (L.A.)

2271'-6 x VARI. CONTINUOUS WELDED GIRDER BRIDGE-EBL W/14' BIKE TRAIL

138'-10 & 151'-0 7/8 END SPANS MULTIPLE LENGTH INTERIOR SPANS

GIRDERS A & G DETAILS - UNIT 4

STA. 6792+60.93 - 52' LEFT ℄ I-74 OCTOBER, 2015

SCOTT COUNTY

IOWA DEPARTMENT OF TRANSPORTATION - HIGHWAY DIVISION

DESIGN SHEET NO. 91 OF 282 FILE NO. 30253 DESIGN NO. 3408

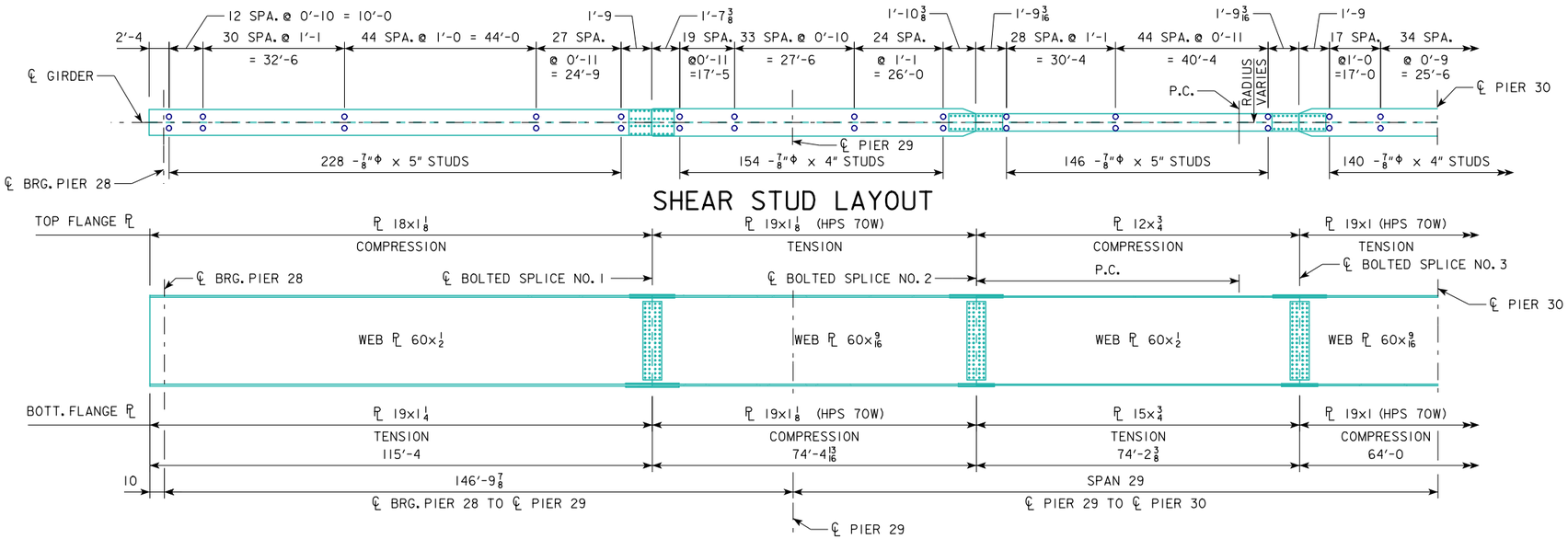

SHEAR STUD LAYOUT

PART GIRDERS B THRU F ELEVATION

(SHEAR STUDS NOT SHOWN)

INTERIOR GIRDER DIMENSIONS					
DIMENSION	GIRDER B	GIRDER C	GIRDER D	GIRDER E	GIRDER F
DIM. A	119'-7	119'-7 1/8	119'-7 1/4	119'-7 5/16	119'-7 7/16
DIM. B	2'-4	2'-4 1/8	2'-4 1/4	2'-4 5/16	2'-4 7/16
SPAN 29	148'-0 7/16	148'-0 7/16	148'-0 1/2	148'-0 1/2	148'-0 1/2
SPAN 30	147'-11 1/8	147'-11 1/8	147'-11 3/16	147'-11 1/4	147'-11 1/4
SPAN 31	151'-0 13/16	151'-0 7/8	151'-0 15/16	151'-0 15/16	151'-1
P.C.	54'-8 3/16	53'-0 1/8	51'-4	49'-7 7/8	47'-11 13/16

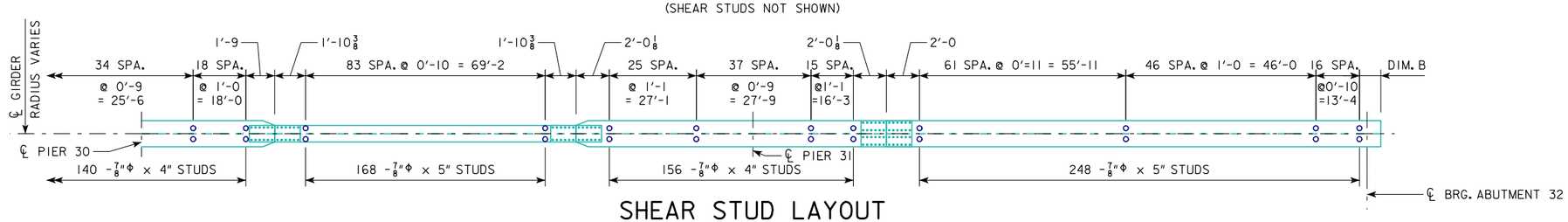

SHEAR STUD LAYOUT

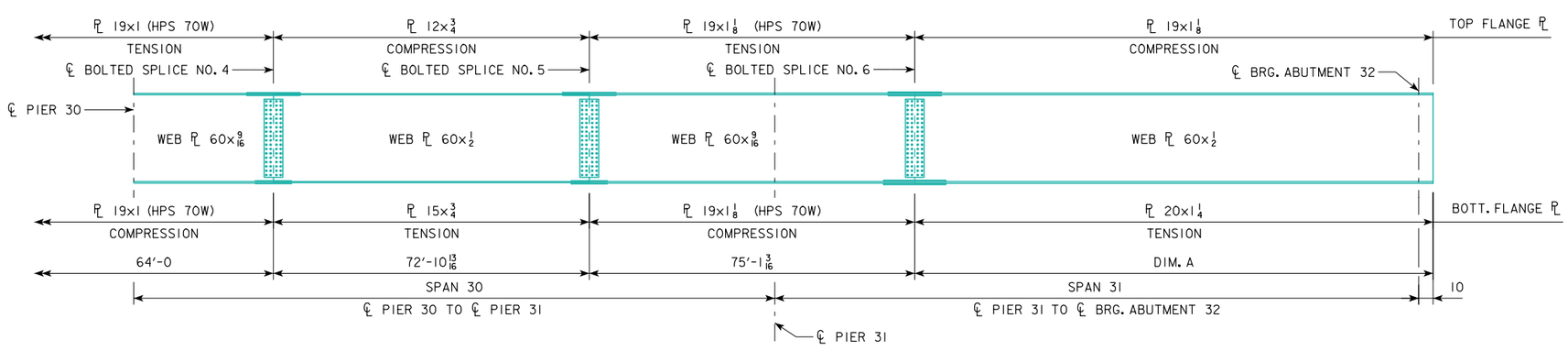

PART GIRDERS B THRU F ELEVATION

(SHEAR STUDS NOT SHOWN)

NOTES:

DIMENSIONS ARE HORIZONTAL ALONG ℄ GIRDER UNLESS OTHERWISE NOTED OR SHOWN.

SEE DESIGN SHEETS 79 & 80 FOR RADIUS OF CURVED GIRDER SECTIONS AND INTERMEDIATE DIAPHRAGM AND STIFFENER LOCATIONS.

SEE FRAMING PLAN ON DESIGN SHEET 79 FOR LOCATION OF TRANSITION FROM STRAIGHT TO CURVED GIRDER.

SEE DESIGN SHEETS 120 & 121 FOR GIRDER SPLICE DETAILS.

SEE DESIGN SHEET 97 FOR GIRDER NOTES.

SEE DESIGN SHEET 97 FOR SHEAR STUD DETAILS.

whks
engineers + planners + land surveyors

DESIGN FOR VARIABLE SKEW (L.A.)

2271'-6 x VARI. CONTINUOUS WELDED GIRDER BRIDGE-EBL W/14' BIKE TRAIL

138'-10 & 151'-0 7/8 END SPANS MULTIPLE LENGTH INTERIOR SPANS

GIRDERS B-F DETAILS - UNIT 4

STA. 6792+60.93 - 52' LEFT ℄ I-74 OCTOBER, 2015

SCOTT COUNTY

IOWA DEPARTMENT OF TRANSPORTATION - HIGHWAY DIVISION

DESIGN SHEET NO. 92 OF 282 FILE NO. 30253 DESIGN NO. 3408

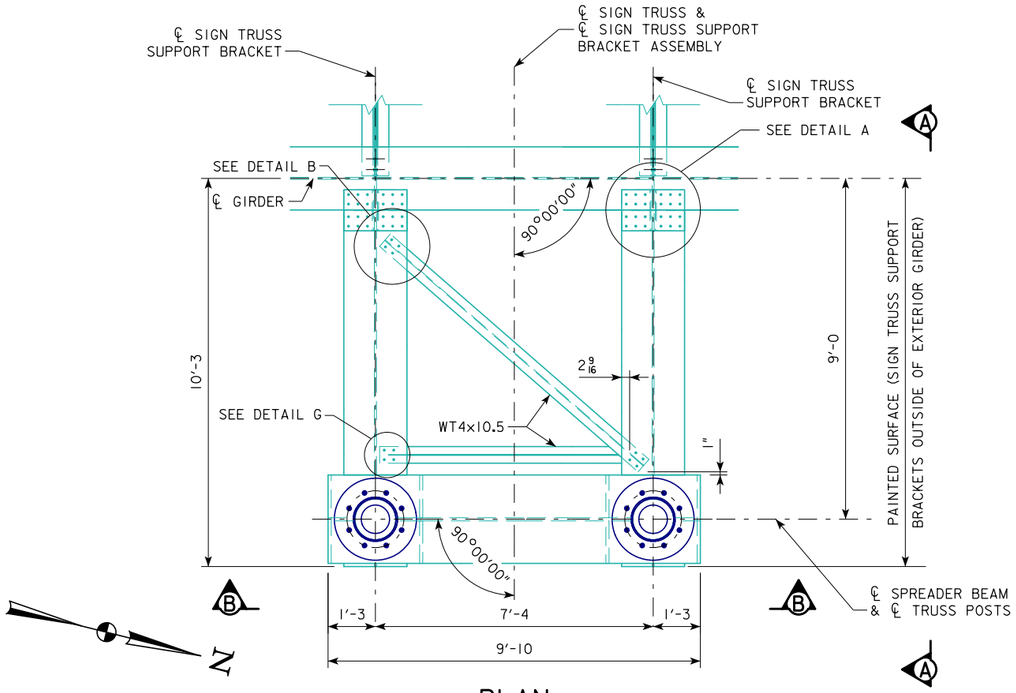

PLAN

GIRDER A SHOWN, GIRDER G SIMILAR

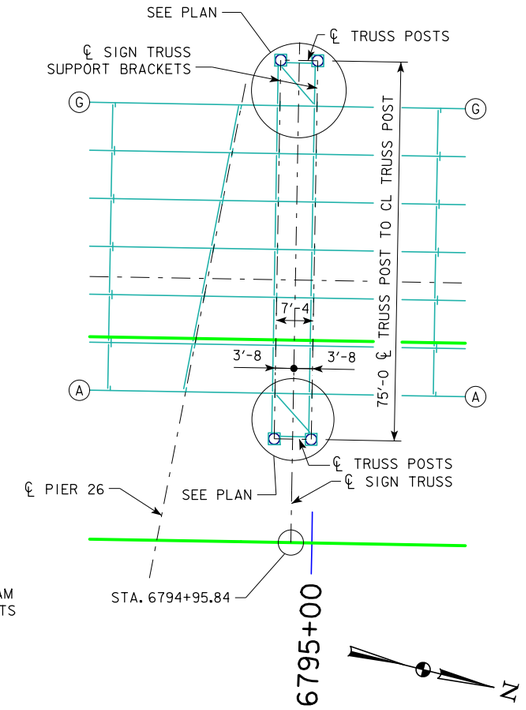

LOCATION PLAN

BENCH MARK NO. 500: STA. 6781+18.92 LT. 161.19'
ELEV. 575.797, CHISELED "X" IN BOLT E. SIDE
CONCRETE STRUCTURE

SIGN TRUSS SUPPORT BRACKET NOTES:

ALL TIGHTENING OF THE NUTS IS TO BE DONE IN THE PRESENCE OF THE INSPECTOR.

PROPERLY SIZED WRENCHES DESIGNED FOR TIGHTENING NUTS AND/OR BOLTS SHALL BE USED TO AVOID ROUNDING OR OTHER DAMAGE TO THE NUTS. ADJUSTABLE END OR PIPE WRENCHES MAY NOT BE USED.

SPREADER BEAM, ANCHOR BOLTS AND NUTS ARE TO BE FREE OF ANY DIRT OR DEBRIS.

APPLY STICK WAX OR BEES WAX TO THE THREADS AND BEARING SURFACES OF THE ANCHOR BOLT, NUTS AND WASHERS.

TIGHTEN BOTTOM NUTS SO THEY FULLY CONTACT THE TOP FLANGE OF THE SPREADER BEAM. TIGHTEN TOP NUTS TO SNUG TIGHT CONDITION. SNUG TIGHT IS DEFINED AS THE FULL EFFORT OF ONE PERSON ON A WRENCH WITH A LENGTH EQUAL TO 14 TIMES THE BOLT DIAMETER BUT NOT LESS THAN 18 INCHES. APPLY FORCE AS CLOSE TO THE END OF THE WRENCH AS POSSIBLE. PULL FIRMLY BY LEANING BACK AND USING ENTIRE BODY WEIGHT ON THE END OF THE WRENCH UNTIL THE NUT STOPS ROTATING. USE A MINIMUM OF TWO SEPARATE PASSES OF TIGHTENING. SEQUENCE THE TIGHTENING IN EACH PASS SO THAT THE NUT ON THE OPPOSITE SIDE, TO THE EXTENT POSSIBLE, WILL BE SUBSEQUENTLY TIGHTENED UNTIL ALL OF THE NUTS IN THAT PASS HAVE BEEN TIGHTENED.

TIGHTEN BOTTOM NUTS TO SNUG TIGHT AS DESCRIBED FOR THE TOP NUTS.

MATCH-MARK THE BOTTOM NUTS AND TOP FLANGE OF SPREADER BEAM USING PAINT, CRAYON, OR OTHER APPROVED MEANS TO PROVIDE A REFERENCE FOR DETERMINING THE RELATIVE ROTATION OF THE NUT AND THE TOP FLANGE OF SPREADER BEAM DURING TIGHTENING. USING A STRIKING OR HYDRAULIC WRENCH, FURTHER TIGHTEN THE BOTTOM NUTS IN TWO PASSES AS LISTED BELOW. USE A SEQUENCE OF TIGHTENING IN EACH PASS SO THAT THE NUT ON THE OPPOSITE SIDE, TO THE EXTENT POSSIBLE, WILL BE SUBSEQUENTLY TIGHTENED UNTIL ALL NUTS IN THAT PASS HAVE BEEN TURNED. DO NOT ROTATE THE TOP NUTS WHILE TIGHTENING THE BOTTOM NUTS.

ANCHOR BOLT SIZE	FIRST PASS	SECOND PASS	TOTAL ROTATION
$1\frac{1}{2}$"Φ	1/6 TURN	1/6 TURN	1/3 TURN

LUBRICATE, PLACE, AND TIGHTEN THE JAM NUTS TO SNUG TIGHT.

THE $1\frac{1}{2}$" Φ ANCHOR BOLTS SHALL BE ASTM F1554, GRADE 105 MATERIAL WITH A HOT-DIP GALVANIZED COATING. ANCHOR BOLT MATERIAL SHALL ALSO MEET THE SUPPLEMENTARY REQUIREMENTS OF PARAGRAPH S5 OF ASTM F1554. NUTS FOR ANCHOR BOLTS SHALL BE ASTM A563, HEAVY HEX, HOT-DIP GALVANIZED. FLAT CIRCULAR WASHERS SHALL BE ASTM F436, MECHANICALLY ZINC COATED.

STEEL WELDING SHALL BE IN ACCORDANCE WITH THE CURRENT EDITION OF THE AWS SPECIFICATIONS D1.1, STRUCTURAL WELDING CODE--STEEL.

WELDING OF ANCHOR BOLTS SHALL NOT BE ALLOWED.

ANCHOR BOLTS SHALL BE PLUMB WITHIN $\frac{1}{4}$ INCH PER FOOT FROM VERTICAL.

ANCHOR BOLTS SHALL PROJECT ABOVE TOP OF SUPPORT BRACKET ASSEMBLY WITHIN $\frac{1}{4}$ INCH OF THE PLAN DIMENSION.

ANCHOR BOLTS SHALL BE PROTECTED AT THE DIRECTION OF THE ENGINEER.

ALL NUTS DIRECTLY ABOVE AND BELOW THE SIGN TRUSS BASE PLATE SHALL BE PROVIDED IN THIS CONTRACT AND GIVEN TO THE STATE OF IOWA FOR STORAGE AND FUTURE USE. THESE NUTS, ALONG WITH THE SIGN TRUSS BASE PLATE, SHALL BE INSTALLED BY OTHERS IN A FUTURE CONTRACT.

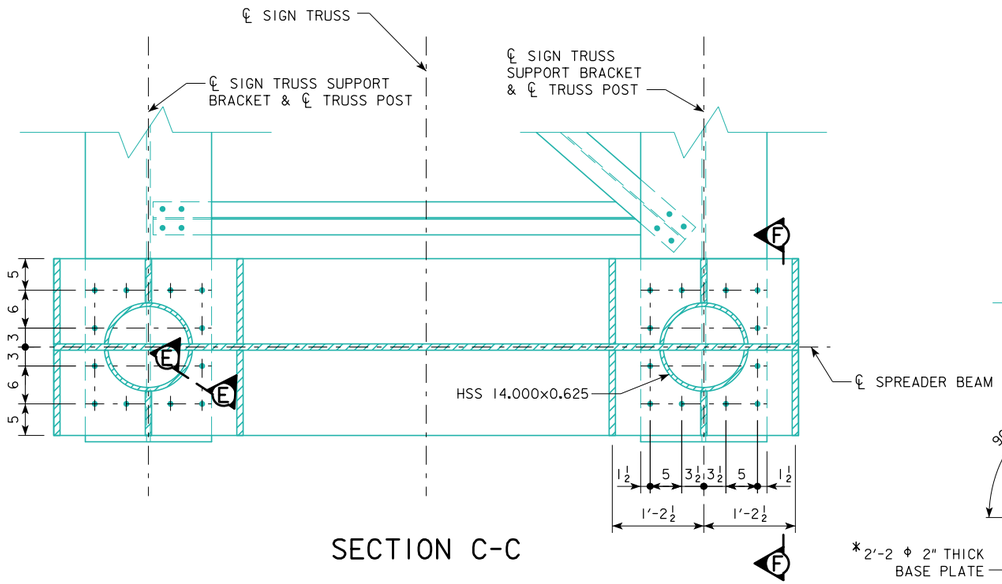

SECTION C-C

* BASE PLATE ON THE SIGN TRUSS IS ROTATED 22.5° FROM STANDARD ORIENTATION.

ALL FIELD CONNECTIONS ARE TO BE BOLTED USING HIGH STRENGTH FASTENERS. UNLESS OTHERWISE NOTED, OPEN HOLES ARE TO BE $\frac{15}{16}$"Φ AND BOLTS ARE TO BE $\frac{7}{8}$"Φ.

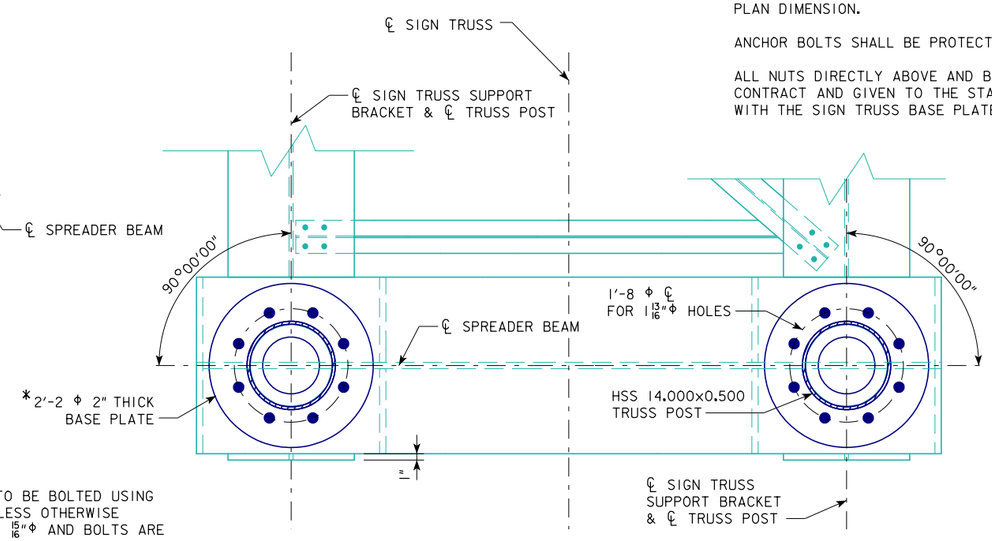

SECTION D-D

NOTES:

SEE DESIGN SHEET 94 FOR VIEWS A-A & B-B.

SEE DESIGN SHEET 94 FOR DETAILS A, B, & G.

SEE DESIGN SHEET 94 FOR LOCATION OF SECTIONS C-C & D-D.

SEE DESIGN SHEET 95 FOR SECTIONS E-E & F-F.

DESIGN FOR VARIABLE SKEW (L.A.)

2271'-6 x VARI. CONTINUOUS WELDED GIRDER BRIDGE-EBL W/14' BIKE TRAIL

138'-10 & 151'-0 $\frac{7}{8}$ END SPANS MULTIPLE LENGTH INTERIOR SPANS

SIGN SUPPORT DETAILS - UNIT 3

STA. 6792+60.93 - 52' LEFT ℄ I-74 OCTOBER, 2015

SCOTT COUNTY

IOWA DEPARTMENT OF TRANSPORTATION - HIGHWAY DIVISION

DESIGN SHEET NO. 93 OF 282 FILE NO. 30253 DESIGN NO. 3408

whks engineers + planners + land surveyors

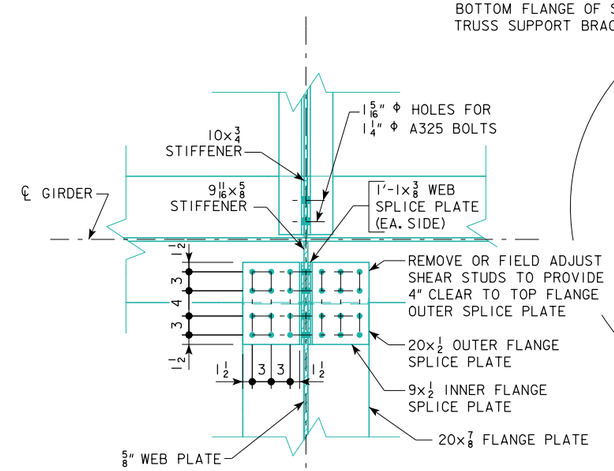

DETAIL A

SHOWN BELOW TOP FLANGE OF GIRDER

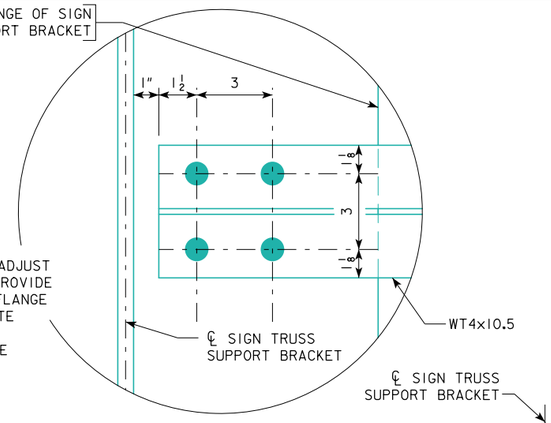

DETAIL G

SHOWN BELOW TOP FLANGE OF BRACKET

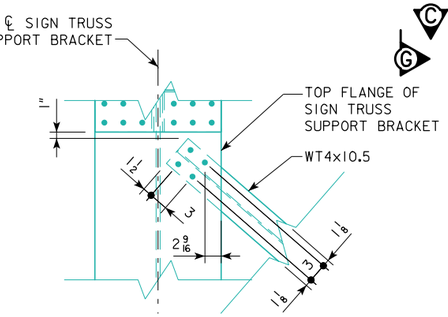

DETAIL B

ALL FIELD CONNECTIONS ARE TO BE BOLTED USING HIGH STRENGTH FASTENERS. UNLESS OTHERWISE NOTED, OPEN HOLES ARE TO BE 15/16"Φ AND BOLTS ARE TO BE ⅞"Φ.

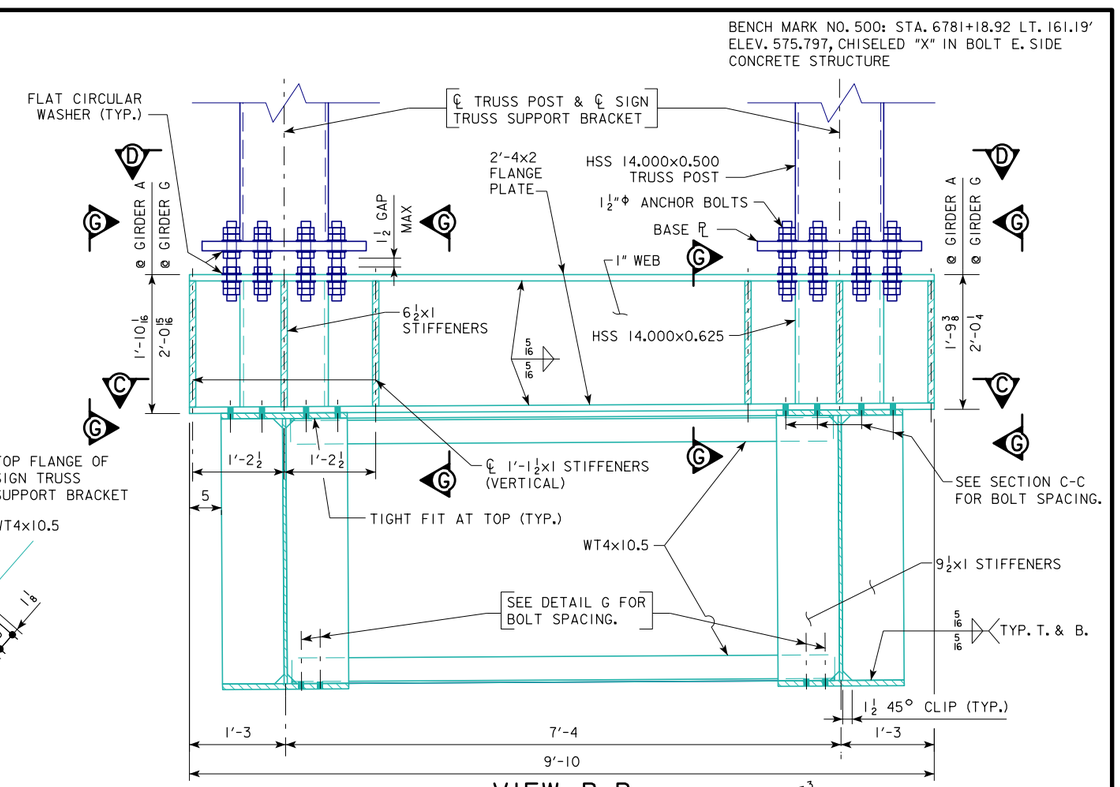

VIEW B-B

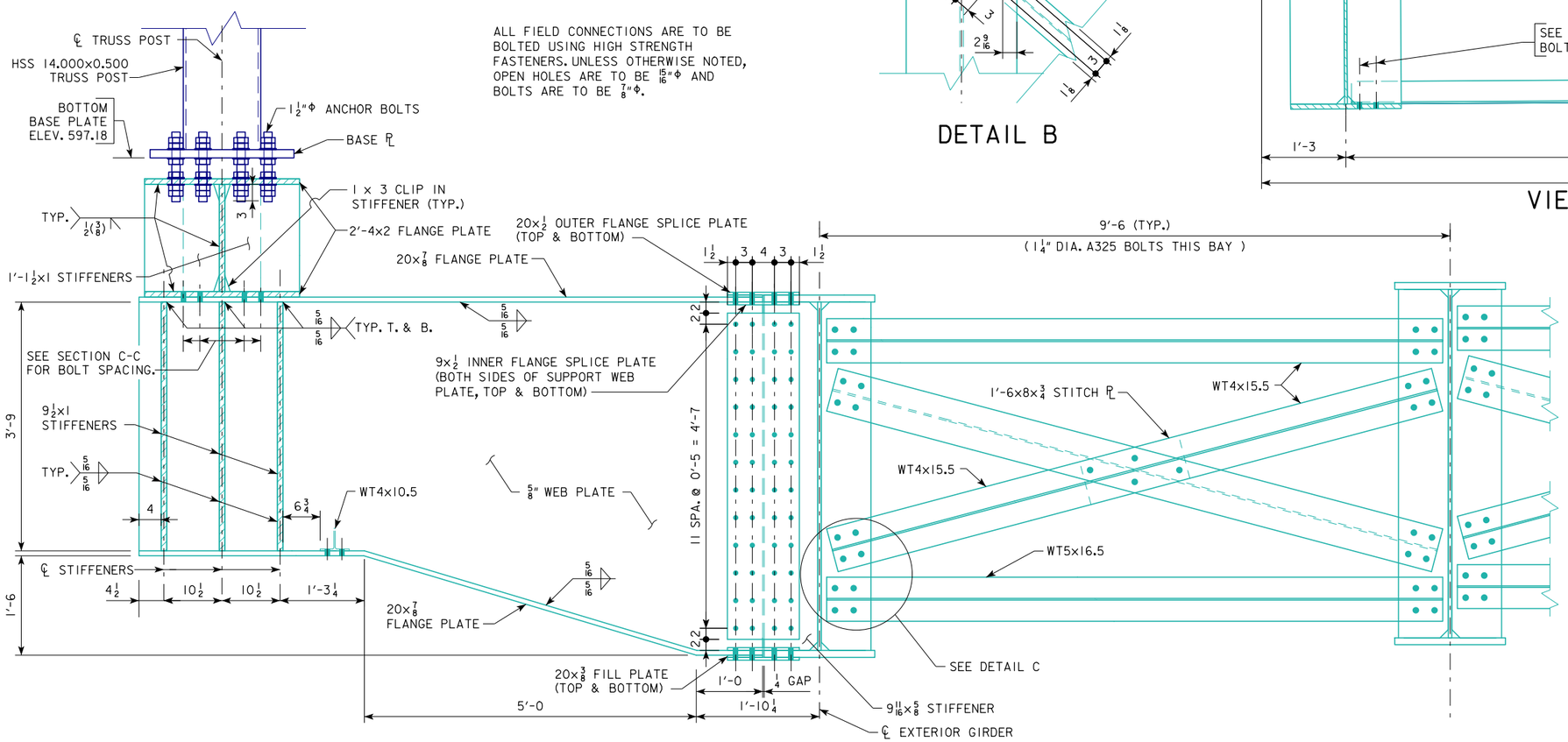

VIEW A-A

UPPER DIAGONAL WT4x10.5 NOT SHOWN FOR CLARITY

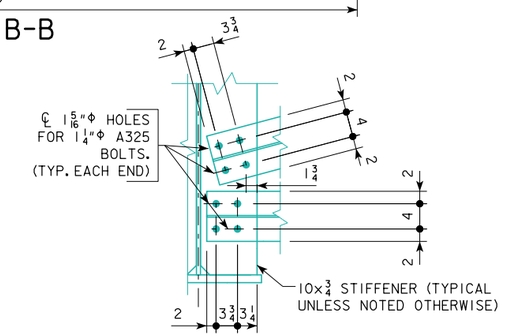

DETAIL C

NOTES:

SEE DESIGN SHEET 93 FOR LOCATION OF VIEWS A-A & B-B.

SEE DESIGN SHEET 93 FOR LOCATION OF DETAILS A, B, & G.

SEE DESIGN SHEET 93 FOR SECTIONS C-C & D-D.

SEE DESIGN SHEET 93 FOR NOTES.

SEE DESIGN SHEET 95 FOR SECTION G-G.

whks engineers + planners + land surveyors

DESIGN FOR VARIABLE SKEW (L.A.)

2271'-6 x VARI. CONTINUOUS WELDED GIRDER BRIDGE-EBL W/14' BIKE TRAIL

138'-10 & 151'-0⅞ END SPANS MULTIPLE LENGTH INTERIOR SPANS

SIGN SUPPORT DETAILS - UNIT 3

STA. 6792+60.93 - 52' LEFT ℄ I-74 OCTOBER, 2015

SCOTT COUNTY

IOWA DEPARTMENT OF TRANSPORTATION - HIGHWAY DIVISION

DESIGN SHEET NO. 94 OF 282 FILE NO. 30253 DESIGN NO. 3408

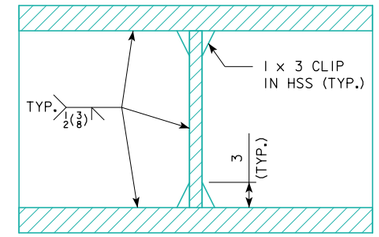

SECTION G-G
(4 LOCATIONS)

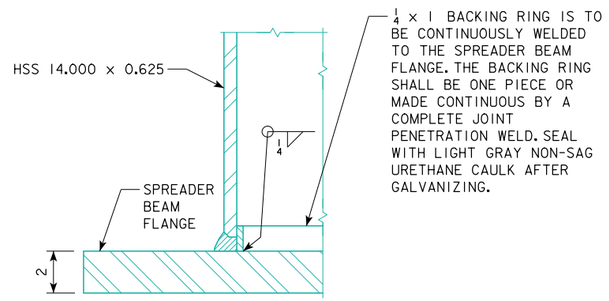

SECTION E-E
BOTTOM FLANGE SHOWN, TOP FLANGE SIMILAR

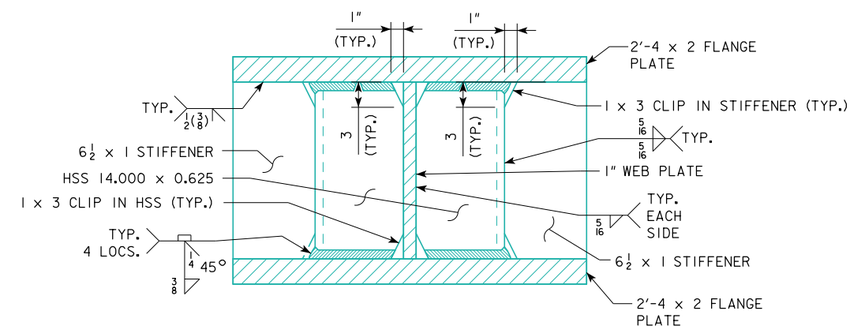

SECTION F-F

NOTES:

SEE DESIGN SHEET 93 FOR SECTIONS E-E & F-F.

SEE DESIGN SHEET 94 FOR LOCATION OF SECTION G-G.

whks
engineers + planners + land surveyors

DESIGN FOR VARIABLE SKEW (L.A.)

2271'-6 x VARI. CONTINUOUS WELDED GIRDER BRIDGE-EBL W/14' BIKE TRAIL

138'-10 & 151'-0 7/8 END SPANS MULTIPLE LENGTH INTERIOR SPANS

SIGN SUPPORT DETAILS - UNIT 3

STA. 6792+60.93 - 52' LEFT ℄ I-74 OCTOBER, 2015

SCOTT COUNTY

IOWA DEPARTMENT OF TRANSPORTATION - HIGHWAY DIVISION

DESIGN SHEET NO. 95 OF 282 FILE NO. 30253 DESIGN NO. 3408

Intentionally Left Blank

whks
engineers + planners + land surveyors

DESIGN FOR VARIABLE SKEW (L.A.)

2271'-6 x VARI. CONTINUOUS WELDED GIRDER BRIDGE-EBL W/14' BIKE TRAIL

138'-10 & 151'-0 7/8 END SPANS MULTIPLE LENGTH INTERIOR SPANS

BLANK SHEET

STA. 6792+60.93 - 52' LEFT ℄ I-74 OCTOBER, 2015

SCOTT COUNTY

IOWA DEPARTMENT OF TRANSPORTATION - HIGHWAY DIVISION

DESIGN SHEET NO. 96 OF 282 FILE NO. 30253 DESIGN NO. 3408

DESIGN TEAM CF / BB / JZ	SCOTT COUNTY	PROJECT NUMBER BRFIM-074-1(200)5--05-82	SHEET NUMBER 97

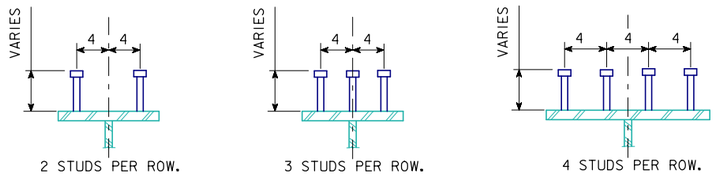

SHEAR STUD DETAIL

NOTE: ALL STUDS TO BE $\frac{7}{8}$"Φ

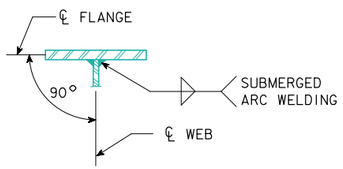

FLANGE TO WEB DETAILS

FLANGE TO WEB WELD SIZE	
SIZE OF WELD	FLANGE THICKNESS
$\frac{1}{4}$"	$\leq \frac{3}{4}$"
$\frac{5}{16}$"	$> \frac{3}{4}$"

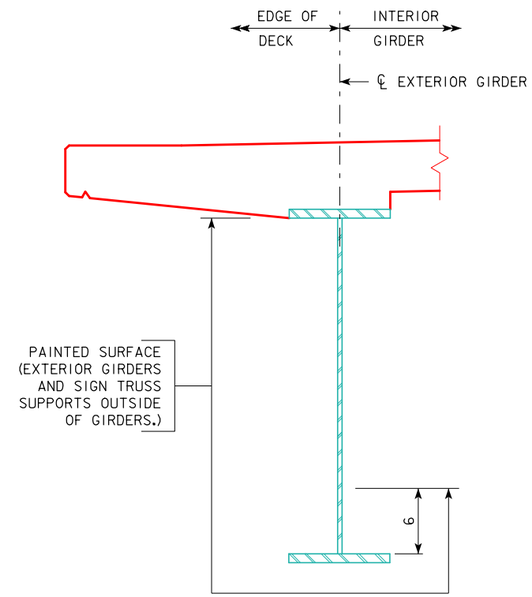

LIMITS OF PAINTING DETAIL

(BARRIER RAIL NOT SHOWN)

WEATHERING STEEL NOTES:

ALL STRUCTURAL STEEL, EXCEPT AS NOTED, SHALL CONFORM TO ASTM A709 GRADE 50W. THE MINIMUM YIELD POINT FOR GRADE 50W STRUCTURAL STEEL IS 50,000 PSI FOR PLATES 4 INCHES AND UNDER IN THICKNESS, AND ALL STRUCTURAL SHAPES. THE GRADE 50W STEEL IS A WEATHERING STEEL AND IS TO REMAIN UNPAINTED, EXCEPT AS NOTED.

THE TOP AND BOTTOM FLANGES OF GIRDER SECTIONS OVER PIERS SHALL BE GRADE HPS 70W STEEL. THE GRADE 70W STEEL IS A WEATHERING STEEL AND IS TO REMAIN UNPAINTED, EXCEPT AS NOTED.

FLOOR DRAINS INCLUDING PLATES WELDED TO THE DRAIN FOR DRAIN SUPPORT ARE TO BE GRADE 36 STEEL.

ALL PIECES COMPRISING THE ABUTMENT AND PIER BEARINGS SHALL COMPLY WITH THE REQUIREMENTS AS STATED IN THE NOTES ON DESIGN SHEET 152.

SHEAR STUDS ARE TO BE OF AN APPROVED TYPE LISTED IN MATERIALS I.M. 453.10, APPENDIX A.

THE FINISH ON FLOOR DRAINS, BEARINGS AND WEATHERING STEEL SHALL BE IN ACCORDANCE WITH THE PLAN NOTES AND SECTION 2408 OF THE STANDARD SPECIFICATIONS. EXTERIOR SURFACES OF ALL GALVANIZED COMPONENTS WHICH ARE DESIGNATED IN THE CONTRACT DOCUMENTS TO BE PAINTED SHALL BE PREPARED ACCORDING TO ARTICLE 2509.03 OF THE STANDARD SPECIFICATIONS.

BOLTS FOR USE WITH WEATHERING STEEL SHALL BE A325 TYPE III WITH A563 GRADE DH3 NUTS AND F436 TYPE III WASHERS.

BOLTS USED TO SPLICE GIRDER SECTIONS ARE TO BE INSTALLED SUCH THAT NUTS ARE ON THE INSIDE FACE OF THE GIRDER WEBS FOR THE EXTERIOR GIRDERS, AND ON THE TOP OF BOTH TOP AND BOTTOM FLANGES OF ALL THE GIRDERS.

THE STEEL SHALL BE KEPT FREE OF OIL, GREASE, DIRT, CRAYON OR CHALK MARKS, CONCRETE SPATTER AND ANY OTHER FOREIGN MATTER THAT MAY AFFECT THE NATURAL OXIDATION OF THE STEEL. ANY FOREIGN MATTER REMAINING ON THE STEEL AFTER COMPLETION OF BRIDGE CONSTRUCTION SHALL BE REMOVED BY THE BRIDGE CONTRACTOR AS DIRECTED BY THE ENGINEER. THE RESULTANT SURFACE SHALL BE FREE OF ALL VISIBLE RESIDUES. ALL COSTS ASSOCIATED WITH CLEANING STEEL SURFACES SHALL BE BORNE BY THE BRIDGE CONTRACTOR.

SEAL MATERIAL FOR CAULKING SHALL BE NEUTRAL CURE AND NON SAG SILICONE. THREE PRODUCTS MEETING THESE CRITERIA ARE DOW 888, CSL342 OR CRAFCO ROADSAVER SILICONE JOINT SEALANT.

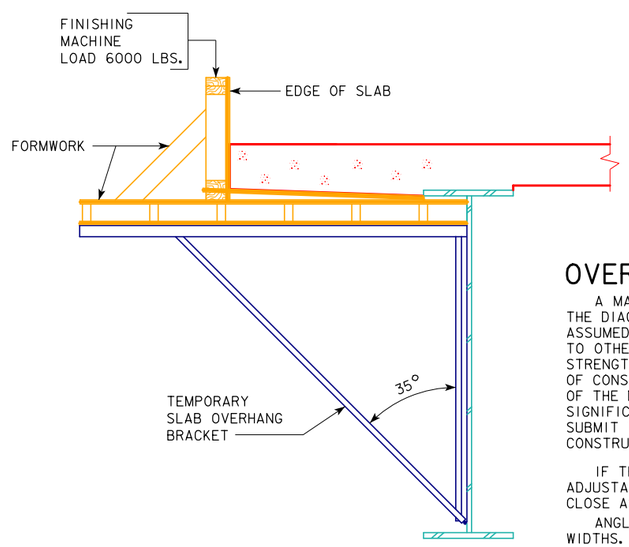

TEMPORARY SLAB OVERHANG BRACKET DETAIL

OVERHANG BRACKET NOTES:

A MAXIMUM FINISHING MACHINE LOAD AND THE ANGLE OF THE DIAGONAL MEMBER OF THE OVERHANG BRACKET SHOWN WERE ASSUMED BY THE DESIGNER. THESE ASSUMPTIONS, IN ADDITION TO OTHER CONSTRUCTION LOADINGS, WERE USED TO CHECK THE STRENGTH OF THE EXTERIOR GIRDER DURING CRITICAL STAGES OF CONSTRUCTION. IF THE FINISHING MACHINE LOAD OR ANGLE OF THE DIAGONAL MEMBER OF THE OVERHANG BRACKET DEVIATE SIGNIFICANTLY FROM VALUES SHOWN, THE CONTRACTOR SHALL SUBMIT TO THE ENGINEER THIS INFORMATION ON PROPOSED CONSTRUCTION EQUIPMENT TO BE USED.

IF THE VERTICAL HEIGHT OF THE OVERHANG BRACKET IS ADJUSTABLE, THE BASE OF THE BRACKET IS TO BE LOCATED AS CLOSE AS POSSIBLE TO THE BOTTOM FLANGE OF THE GIRDER.

ANGLE MAY VARY TO COMPENSATE FOR VARIOUS SLAB OVERHANG WIDTHS.

FASCIA GIRDER PAINT SHALL BE PROTECTED FROM DAMAGE BY BRACKETS. SEE STEEL PAINTING NOTES ON THIS SHEET.

PAINTED STEEL NOTES:

STRUCTURAL STEEL SHALL BE PAINTED AS FOLLOWS:

1. EXTERIOR SURFACES: ALL EXTERIOR FACES OF THE FASCIA GIRDERS WITHIN THE LIMITS SHOWN IN THESE PLANS , AS WELL AS ANY STRUCTURAL STEEL ATTACHED TO THE EXTERIOR SURFACE OF THE FASCIA GIRDERS, SHALL BE PAINTED IN ACCORDANCE WITH THE "SPECIAL PROVISIONS FOR FLUOROPOLYMER PAINT FOR STRUCTURAL STEEL". THE FINISH COAT PAINT COLOR SHALL MATCH FEDERAL STANDARD NO. 595C COLOR NUMBER 26099 SATIN GRAY-BLUE. ZONE PAINTING OF SUPERSTRUCTURE STEEL NEAR THE EXPANSION JOINTS IN ACCORDANCE WITH THE STANDARD SPECIFICATIONS SHALL APPLY TO INTERIOR GIRDER SURFACES BUT NOT THE FASCIA SURFACES LISTED ABOVE.

2. PROTECTION OF PAINTED SURFACES: PAINTED SURFACES SHALL BE PROTECTED FROM DAMAGE DURING SHIPMENT AND DURING ERECTION. PADDING OR OTHER MATERIAL APPROPRIATE FOR PROTECTING PAINTED SURFACES SHALL BE PLACED BETWEEN THE DECK FORMWORK BRACING AND THE EXTERIOR GIRDER FACE DURING CONSTRUCTION OF THE DECK. AFTER ERECTION OF THE BRIDGE, PAINTING OF EXTERIOR FASTENERS AND TOUCHUP OF PAINTED SURFACES SHALL BE IN ACCORDANCE WITH THE "SPECIAL PROVISIONS FOR FLUOROPOLYMER PAINT FOR STRUCTURAL STEEL".

whks
engineers + planners + land surveyors

DESIGN FOR VARIABLE SKEW (L.A.)

2271'-6 x VARI. CONTINUOUS WELDED GIRDER BRIDGE-EBL W/14' BIKE TRAIL

138'-10 & 151'-0$\frac{7}{8}$ END SPANS MULTIPLE LENGTH INTERIOR SPANS

GIRDER DETAILS

STA. 6792+60.93 - 52' LEFT ℄ I-74 OCTOBER, 2015

SCOTT COUNTY

IOWA DEPARTMENT OF TRANSPORTATION - HIGHWAY DIVISION

DESIGN SHEET NO. 97 OF 282 FILE NO. 30253 DESIGN NO. 3408

MOMENT AND REACTION TABLE
MOMENTS IN FOOT-KIPS REACTIONS IN KIPS

	LOAD NAME		LOAD, KIPS / FOOT	MAXIMUM POSITIVE MOMENTS					MAXIMUM NEGATIVE MOMENTS						MAXIMUM REACTIONS					
				SPAN 16	SPAN 17	SPAN 18	SPAN 19	SPAN 20	PIER 16	PIER 17	PIER 18	PIER 19	PIER 20	PIER 21	PIER 16	PIER 17	PIER 18	PIER 19	PIER 20	PIER 21
GIRDER A	DC1		1.08 TO 1.14	1921	746	1183	462	1509	0	-2594	-1916	-1684	-1923	0	69	193	163	151	164	61
	DC2		0.3	422	237	293	165	360	0	-508	-414	-367	-385	0	15	44	39	37	39	15
	DW		0.177 TO 0.202	347	156	218	106	266	0	-370	-287	-251	-260	0	12	31	27	25	26	10
	LIVE LOAD + IMPACT HL-93	TRUCK+LANE+D.L.A.	DISTRIBUTION FACTOR = VARIES	3463	2788	3029	2272	3042	0	-2531*	-2321*	-2206*	-2083*	0	132	220*	212*	210*	200*	135
		TANDEM+LANE+D.L.A.		2916	2384	2575	1956	2567	0	-1686	-1568	-1462	-1381	0	114	176	171	167	161	114
	TOTAL		----	6153	3927	4723	3005	5177	0	-6003	-4938	-4508	-4651	0	228	487	441	422	428	221
GIRDER B	DC1		1.14 TO 1.21	1673	599	962	395	1224	0	-2437	-1919	-1666	-1864	0	64	186	162	151	160	56
	DC2		0.15	263	132	169	99	197	0	-310	-265	-228	-241	0	9	26	24	22	23	7
	DW		0.177 TO 0.202	305	133	182	98	211	0	-341	-279	-240	-247	0	11	29	26	24	24	9
	LIVE LOAD + IMPACT HL-93	TRUCK+LANE+D.L.A.	DISTRIBUTION FACTOR = VARIES	2656	2096	2196	1883	2156	0	-2102*	-2006*	-1874*	-1802*	0	138	231*	225*	224*	207*	137
		TANDEM+LANE+D.L.A.		2248	1803	1876	1618	1829	0	-1439	-1373	-1274	-1193	0	123	195	191	189	177	124
	TOTAL		----	4897	2960	3509	2475	3788	0	-5190	-4469	-4008	-4154	0	221	471	437	420	413	209
GIRDER C	DC1		1.14 TO 1.21	1743	645	1022	419	1306	0	-2533	-1987	-1726	-1938	0	65	191	165	154	164	56
	DC2		0.15	173	81	108	56	128	0	-198	-165	-142	-153	0	7	17	16	15	16	5
	DW		0.177 TO 0.202	314	139	191	99	223	0	-352	-285	-244	-256	0	11	30	26	24	24	9
	LIVE LOAD + IMPACT HL-93	TRUCK+LANE+D.L.A.	DISTRIBUTION FACTOR = VARIES	2676	2134	2241	1881	2231	0	-2145*	-2027*	-1886*	-1852*	0	147	237*	232*	224*	218*	141
		TANDEM+LANE+D.L.A.		2264	1833	1913	1610	1893	0	-1440	-1372	-1264	-1223	0	131	202	198	193	187	128
	TOTAL		----	4906	2999	3562	2455	3888	0	-5228	-4464	-3998	-4199	0	230	475	439	416	422	212
GIRDER D	DC1		1.14 TO 1.21	1795	664	1051	427	1356	0	-2593	-2033	-1762	-1989	0	68	194	168	156	167	58
	DC2		0	95	36	56	23	69	0	-91	-71	-59	-66	0	3	6	5	5	5	2
	DW		0.177 TO 0.202	321	142	194	98	230	0	-359	-291	-245	-261	0	11	30	27	24	25	9
	LIVE LOAD + IMPACT HL-93	TRUCK+LANE+D.L.A.	DISTRIBUTION FACTOR = VARIES	2707	2186	2243	1895	2289	0	-2185*	-2050*	-1890*	-1886*	0	152	244*	236*	229*	225*	146
		TANDEM+LANE+D.L.A.		2286	1870	1918	1618	1940	0	-1469	-1371	-1274	-1254	0	136	208	201	196	193	132
	TOTAL		----	4918	3028	3544	2443	3944	0	-5228	-4445	-3956	-4202	0	234	474	436	414	422	216
GIRDER E	DC1		1.14 TO 1.21	1830	673	1063	426	1383	0	-2627	-2053	-1775	-2015	0	68	197	169	157	169	58
	DC2		0	55	8	19	3	27	0	-32	-17	-13	-17	0	1	2	1	1	1	1
	DW		0.177 TO 0.202	325	143	196	97	233	0	-363	-294	-247	-262	0	11	30	27	24	25	9
	LIVE LOAD + IMPACT HL-93	TRUCK+LANE+D.L.A.	DISTRIBUTION FACTOR = VARIES	2754	2198	2257	1927	2351	0	-2243*	-2100*	-1938*	-1942*	0	154	246*	239*	240*	234*	147
		TANDEM+LANE+D.L.A.		2324	1891	1931	1642	1991	0	-1511	-1405	-1303	-1300	0	138	209	205	205	199	133
	TOTAL		----	4964	3022	3535	2453	3994	0	-5265	-4464	-3973	-4236	0	235	474	437	422	429	216
GIRDER F	DC1		1.14 TO 1.21	1855	665	1069	419	1401	0	-2647	-2057	-1767	-2027	0	69	198	169	156	170	60
	DC2		0	50	3	12	5	14	0	-27	-3	-11	-10	0	1	2	0	0	0	0
	DW		0.177 TO 0.202	324	145	198	96	235	0	-365	-297	-248	-263	0	11	30	27	24	25	10
	LIVE LOAD + IMPACT HL-93	TRUCK+LANE+D.L.A.	DISTRIBUTION FACTOR = VARIES	2826	2249	2300	1876	2399	0	-2289*	-2122*	-1964*	-1941*	0	157	250*	244*	238*	240*	149
		TANDEM+LANE+D.L.A.		2389	1934	1967	1599	2032	0	-1545	-1432	-1325	-1298	0	140	214	208	203	204	134
	TOTAL		----	5055	3062	3579	2396	4049	0	-5328	-4479	-3990	-4241	0	238	479	440	418	435	218
GIRDER G	DC1		1.14 TO 1.21	1878	656	1074	407	1417	0	-2651	-2059	-1762	-2027	0	70	197	169	155	170	60
	DC2		0	78	18	29	2	10	0	-59	-30	-16	-10	0	2	4	2	1	-1	0
	DW		0.177 TO 0.202	320	148	201	99	236	0	-364	-300	-250	-265	0	11	30	27	24	25	9
	LIVE LOAD + IMPACT HL-93	TRUCK+LANE+D.L.A.	DISTRIBUTION FACTOR = VARIES	2805	2230	2315	2011	2386	0	-2266*	-2111*	-1964*	-1943*	0	156	251*	244*	234*	232*	148
		TANDEM+LANE+D.L.A.		2374	1916	1979	1718	2023	0	-1539	-1427	-1314	-1285	0	139	214	208	200	199	133
	TOTAL		----	5081	3052	3619	2519	4049	0	-5340	-4500	-3992	-4245	0	239	482	443	415	427	217

NOTES:
D.L.A. = DYNAMIC LOAD ALLOWANCE.

MOMENTS & REACTIONS SHOWN ARE UNFACTORED.

DC1 INCLUDES ALL NON-COMPOSITE DEAD LOADS SUCH AS STEEL GIRDER AND CONCRETE SLAB WEIGHT.

DC2 INCLUDES ALL COMPOSITE DEAD LOADS SUCH AS BARRIER RAILS.

DW INCLUDES THE WEIGHT OF A 20 PSF FUTURE WEARING SURFACE AND UTILITIES.

* 0.9 (TWO DESIGN TRUCKS + LANE)

whks
engineers + planners + land surveyors

DESIGN FOR VARIABLE SKEW (L.A.)

2271'-6 x VARI. CONTINUOUS WELDED GIRDER BRIDGE-EBL W/14' BIKE TRAIL

138'-10 & 151'-0 7/8 END SPANS MULTIPLE LENGTH INTERIOR SPANS

MOMENT & REACTION TABLE-UNIT 1

STA. 6792+60.93 - 52' LEFT ℄ I-74 OCTOBER, 2015

SCOTT COUNTY

IOWA DEPARTMENT OF TRANSPORTATION - HIGHWAY DIVISION

DESIGN SHEET NO. 98 OF 282 FILE NO. 30253 DESIGN NO. 3408

MOMENT AND REACTION TABLE
MOMENTS IN FOOT-KIPS REACTIONS IN KIPS

	LOAD NAME		LOAD, KIPS / FOOT	MAXIMUM POSITIVE MOMENTS					MAXIMUM NEGATIVE MOMENTS						MAXIMUM REACTIONS					
				SPAN 16	SPAN 17	SPAN 18	SPAN 19	SPAN 20	PIER 16	PIER 17	PIER 18	PIER 19	PIER 20	PIER 21	PIER 16	PIER 17	PIER 18	PIER 19	PIER 20	PIER 21
GIRDER H	DC1		1.14 TO 1.21	1976	699	1112	414	1410	0	-2813	-2134	-1831	-2017	0	71	211	174	161	168	60
	DC2		0.1	125	57	64	17	9	0	-127	-91	-57	-12	0	4	9	7	4	1	0
	DW		0.177 TO 0.202	310	150	204	102	240	0	-360	-302	-253	-267	0	11	30	27	25	25	10
	LIVE LOAD + IMPACT HL-93	TRUCK+LANE+D.L.A.	DISTRIBUTION FACTOR = VARIES	2750	2126	2278	1940	2304	0	-2192*	-2058*	-1934*	-1895*	0	155	252*	246*	232*	231*	148
		TANDEM+LANE+D.L.A.		2334	1824	1948	1662	1953	0	-1494	-1399	-1290	-1261	0	139	214	210	199	197	133
	TOTAL		----	5161	3032	3658	2473	3963	0	-5492	-4585	-4075	-4191	0	242	502	454	422	426	218
GIRDER J	DC1		1.14 TO 1.21	1748	614	1022	407	1367	0	-2459	-1997	-1698	-1992	0	68	183	167	150	168	58
	DC2		0.1 TO 0.2	168	87	104	51	46	0	-219	-182	-116	-62	0	7	20	18	9	5	1
	DW		0.177 TO 0.202	293	146	203	107	244	0	-343	-296	-255	-274	0	11	29	27	25	26	10
	LIVE LOAD + IMPACT HL-93	TRUCK+LANE+D.L.A.	DISTRIBUTION FACTOR = VARIES	2684	1990	2235	1783	2134	0	-2119*	-1945*	-1868*	-1784*	0	151	257*	240*	228*	231*	145
		TANDEM+LANE+D.L.A.		2277	1690	1910	1536	1813	0	-1495	-1347	-1256	-1197	0	136	219	203	195	197	130
	TOTAL		----	4893	2837	3564	2348	3791	0	-5140	-4420	-3937	-4112	0	237	488	451	412	429	213
GIRDER K	DC1		0.93 TO 1.27	1503	493	936	392	1311	0	-2110	-1822	-1563	-1970	0	61	160	154	139	165	55
	DC2		0.1 TO 0.3	210	85	123	79	93	0	-265	-237	-188	-143	0	9	16	26	19	13	3
	DW		0.177 TO 0.202	275	115	188	106	239	0	-312	-292	-255	-290	0	10	27	28	25	28	10
	LIVE LOAD + IMPACT HL-93	TRUCK+LANE+D.L.A.	DISTRIBUTION FACTOR = VARIES	2678	1624	2152	1553	1797	0	-1895*	-1856*	-1773*	-1616*	0	141	219*	226*	218*	237*	138
		TANDEM+LANE+D.L.A.		2290	1392	1867	1344	1541	0	-1362	-1286	-1210	-1098	0	128	185	192	188	204	123
	TOTAL		----	4666	2317	3399	2130	3440	0	-4582	-4207	-3779	-4019	0	221	422	434	401	443	205
GIRDER L	DC1		0.71 TO 1.02	0	510	848	327	1142	---	-1098	-1158	-1075	-1366	0	---	87	101	99	119	49
	DC2		0.1 TO 0.3	0	105	111	68	123	---	-140	-148	-153	-151	0	---	14	15	19	17	5
	DW		0.177 TO 0.202	0	133	179	82	218	---	-164	-190	-184	-214	0	---	16	18	20	22	9
	LIVE LOAD + IMPACT HL-93	TRUCK+LANE+D.L.A.	DISTRIBUTION FACTOR = VARIES	224	2045	2087	1172	1418	---	-833*	-1172*	-1176*	-989*	0	---	133*	162*	157*	184*	126
		TANDEM+LANE+D.L.A.		216	1710	1829	1022	1231	---	-560	-825	-813	-695	0	---	110	136	137	158	114
	TOTAL		----	224	2793	3225	1649	2901	---	-2235	-2668	-2588	-2720	0	---	250	295	295	341	189
GIRDER M	DC1		0.70 TO 1.00	---	---	562	308	1159	---	---	---	-1080	-1242	0	---	---	---	99	112	49
	DC2		0.1 TO 0.3	---	---	82	66	160	---	---	---	-136	-159	0	---	---	---	15	18	7
	DW		0.163 TO 0.175	---	---	120	79	228	---	---	---	-181	-198	0	---	---	---	19	21	9
	LIVE LOAD + IMPACT HL-93	TRUCK+LANE+D.L.A.	DISTRIBUTION FACTOR = VARIES	---	---	1397	1517	1609	---	---	---	-1003*	-972	0	---	---	---	148*	172*	129
		TANDEM+LANE+D.L.A.		---	---	1178	1324	1385	---	---	---	-812	-827	0	---	---	---	128	145	116
	TOTAL		----	---	---	2161	1970	3156	---	---	---	-2400	-2426	0	---	---	---	281	323	194
GIRDER N	DC1		0.66 TO 1.05	---	---	---	0	1304	---	---	---	---	-1201	0	---	---	---	---	107	54
	DC2		0.1 TO 0.2	---	---	---	0	203	---	---	---	---	-143	0	---	---	---	---	15	9
	DW		0.156 TO 0.164	---	---	---	0	269	---	---	---	---	-185	0	---	---	---	---	20	10
	LIVE LOAD + IMPACT HL-93	TRUCK+LANE+D.L.A.	DISTRIBUTION FACTOR = VARIES	---	---	---	383	2428	---	---	---	---	-867	0	---	---	---	---	159*	139
		TANDEM+LANE+D.L.A.		---	---	---	336	2050	---	---	---	---	-742	0	---	---	---	---	136	123
	TOTAL		----	---	---	---	383	4204	---	---	---	---	-2271	0	---	---	---	---	300	212
GIRDER P	DC1		0.86 TO 1.20	1850	714	1252	373	1289	0	-2480	-2196	-1452	-1452	0	66	180	178	131	128	52
	DC2		0.04 TO 0.14	315	129	178	75	195	0	-371	-269	-186	-223	0	11	24	20	15	18	8
	DW		0.177 TO 0.202	338	181	270	107	251	0	-461	-441	-321	-321	0	12	35	36	29	29	10
	LIVE LOAD + IMPACT HL-93	TRUCK+LANE+D.L.A.	DISTRIBUTION FACTOR = VARIES	4044	2999	3787	1882	1620	0	-3856*	-3950*	-3016*	-1742*	0	159	300*	307*	263*	240*	123
		TANDEM+LANE+D.L.A.		3455	2516	3324	1635	1414	0	-2788	-2842	-2198	-1205	0	136	234	243	214	193	108
	TOTAL		----	6547	4023	5487	2437	3355	0	-7168	-6856	-4975	-3738	0	248	539	540	437	415	193

NOTES:
D.L.A. = DYNAMIC LOAD ALLOWANCE.

MOMENTS & REACTIONS SHOWN ARE UNFACTORED.

DC1 INCLUDES ALL NON-COMPOSITE DEAD LOADS SUCH AS STEEL GIRDER AND CONCRETE SLAB WEIGHT.

DC2 INCLUDES ALL COMPOSITE DEAD LOADS SUCH AS BARRIER RAILS.

DW INCLUDES THE WEIGHT OF A 20 PSF FUTURE WEARING SURFACE AND UTILITIES.

* 0.9 (TWO DESIGN TRUCKS + LANE)

whks
engineers + planners + land surveyors

DESIGN FOR VARIABLE SKEW (L.A.)

2271'-6 x VARI. CONTINUOUS WELDED GIRDER BRIDGE-EBL W/14' BIKE TRAIL

138'-10 & 151'-0 7/8 END SPANS MULTIPLE LENGTH INTERIOR SPANS

MOMENT & REACTION TABLE-UNIT 1

STA. 6792+60.93 - 52' LEFT ℄ I-74 OCTOBER, 2015

SCOTT COUNTY

IOWA DEPARTMENT OF TRANSPORTATION - HIGHWAY DIVISION

DESIGN SHEET NO. 99 OF 282 FILE NO. 30253 DESIGN NO. 3408

MOMENT AND REACTION TABLE
MOMENTS IN FOOT-KIPS REACTIONS IN KIPS

	LOAD NAME		LOAD, KIPS / FOOT	MAXIMUM POSITIVE MOMENTS				MAXIMUM NEGATIVE MOMENTS					MAXIMUM REACTIONS				
				SPAN 21	SPAN 22	SPAN 23	SPAN 24	PIER 21	PIER 22	PIER 23	PIER 24	PIER 25	PIER 21	PIER 22	PIER 23	PIER 24	PIER 25
GIRDER A	DC1		1.09 TO 1.15	1936	771	779	1930	0	-2409	-1486	-2412	0	71	185	141	185	70
	DC2		0.3	392	220	218	393	0	-471	-344	-472	0	15	42	36	42	15
	DW		0.207	347	176	174	345	0	-385	-266	-387	0	12	33	27	33	12
	LIVE LOAD + IMPACT HL-93	TRUCK+LANE+D.L.A.	DISTRIBUTION FACTOR = VARIES	2836	2389	2349	2870	0	-2100*	-1895*	-2105*	0	95	176*	168*	175*	99
		TANDEM+LANE+D.L.A.		2391	2024	1992	2408	0	-1434	-1248	-1413	0	80	128	122	127	82
	TOTAL		----	5511	3556	3520	5538	0	-5365	-3991	-5376	0	192	436	373	435	197
GIRDER B	DC1		1.14 TO 1.22	1384	645	651	1384	0	-2340	-1455	-2318	0	55	179	140	178	57
	DC2		0.15	235	135	134	232	0	-304	-211	-306	0	9	25	21	26	8
	DW		0.207	282	157	159	282	0	-366	-252	-366	0	11	31	26	31	11
	LIVE LOAD + IMPACT HL-93	TRUCK+LANE+D.L.A.	DISTRIBUTION FACTOR = VARIES	2053	1795	1849	2062	0	-1750*	-1546*	-1747*	0	94	164*	162*	170*	97
		TANDEM+LANE+D.L.A.		1768	1532	1577	1743	0	-1194	-1026	-1168	0	85	130	127	132	87
	TOTAL		----	3954	2732	2793	3960	0	-4760	-3464	-4737	0	169	400	349	405	171
GIRDER C	DC1		1.14 TO 1.22	1498	699	700	1501	0	-2442	-1530	-2419	0	59	182	143	180	61
	DC2		0.15	187	91	92	184	0	-222	-145	-223	0	7	19	15	19	7
	DW		0.207	298	163	164	298	0	-378	-259	-378	0	11	32	27	32	11
	LIVE LOAD + IMPACT HL-93	TRUCK+LANE+D.L.A.	DISTRIBUTION FACTOR = VARIES	2005	1726	1757	2002	0	-1745*	-1522*	-1736*	0	90	162*	159*	167*	95
		TANDEM+LANE+D.L.A.		1718	1449	1474	1673	0	-1181	-1001	-1160	0	79	124	122	127	81
	TOTAL		----	3988	2679	2713	3985	0	-4787	-3456	-4756	0	168	395	345	397	173
GIRDER D	DC1		1.14 TO 1.22	1540	715	715	1539	0	-2472	-1556	-2471	0	61	184	146	185	61
	DC2		0	171	77	77	171	0	-177	-105	-177	0	5	12	9	12	5
	DW		0.207	303	166	166	303	0	-383	-262	-383	0	11	32	27	32	11
	LIVE LOAD + IMPACT HL-93	TRUCK+LANE+D.L.A.	DISTRIBUTION FACTOR = VARIES	2033	1746	1746	2010	0	-1790*	-1560*	-1780*	0	90	165*	162*	171*	95
		TANDEM+LANE+D.L.A.		1739	1441	1440	1658	0	-1209	-1022	-1190	0	73	115	114	119	74
	TOTAL		----	4047	2704	2704	4023	0	-4822	-3483	-4811	0	167	393	343	400	172
GIRDER E	DC1		1.14 TO 1.22	1502	700	700	1497	0	-2420	-1531	-2440	0	60	181	143	182	60
	DC2		0.15	184	92	91	187	0	-223	-144	-222	0	7	19	15	19	7
	DW		0.207	298	164	163	297	0	-378	-259	-378	0	11	32	27	32	11
	LIVE LOAD + IMPACT HL-93	TRUCK+LANE+D.L.A.	DISTRIBUTION FACTOR = VARIES	2016	1749	1718	1985	0	-1738*	-1513*	-1729*	0	90	161*	163*	170*	99
		TANDEM+LANE+D.L.A.		1731	1429	1403	1617	0	-1176	-995	-1157	0	70	113	114	119	74
	TOTAL		----	4000	2705	2672	3966	0	-4759	-3447	-4769	0	167	393	349	402	178
GIRDER F	DC1		1.14 TO 1.22	1384	652	646	1384	0	-2318	-1456	-2340	0	57	178	140	179	54
	DC2		0.15	232	134	134	235	0	-306	-211	-304	0	8	26	21	25	9
	DW		0.207	282	158	157	282	0	-366	-252	-366	0	11	31	26	31	10
	LIVE LOAD + IMPACT HL-93	TRUCK+LANE+D.L.A.	DISTRIBUTION FACTOR = VARIES	2058	1839	1791	2042	0	-1737*	-1530*	-1734*	0	95	169*	165*	170*	93
		TANDEM+LANE+D.L.A.		1763	1591	1542	1759	0	-1155	-1018	-1185	0	71	118	115	120	68
	TOTAL		----	3956	2783	2728	3943	0	-4727	-3449	-4744	0	170	404	352	406	166
GIRDER G	DC1		1.09 TO 1.15	1930	779	772	1936	0	-2413	-1487	-2410	0	70	185	142	185	71
	DC2		0.3	392	218	219	392	0	-472	-344	-471	0	15	42	36	42	15
	DW		0.207	345	174	176	347	0	-387	-266	-385	0	12	33	27	33	12
	LIVE LOAD + IMPACT HL-93	TRUCK+LANE+D.L.A.	DISTRIBUTION FACTOR = VARIES	2856	2333	2373	2831	0	-2095*	-1879*	-2086*	0	99	175*	167*	176*	94
		TANDEM+LANE+D.L.A.		2397	1977	2010	2389	0	-1397	-1237	-1426	0	66	110	105	111	63
	TOTAL		----	5523	3504	3540	5506	0	-5367	-3976	-5352	0	196	435	371	435	192

NOTES:
D.L.A. = DYNAMIC LOAD ALLOWANCE.

MOMENTS & REACTIONS SHOWN ARE UNFACTORED.

DC1 INCLUDES ALL NON-COMPOSITE DEAD LOADS SUCH AS STEEL GIRDER AND CONCRETE SLAB WEIGHT.

DC2 INCLUDES ALL COMPOSITE DEAD LOADS SUCH AS BARRIER RAILS.

DW INCLUDES THE WEIGHT OF A 20 PSF FUTURE WEARING SURFACE AND UTILITIES.

* 0.9 (TWO DESIGN TRUCKS + LANE)

whks
engineers + planners + land surveyors

DESIGN FOR VARIABLE SKEW (L.A.)

2271'-6 x VARI. CONTINUOUS WELDED GIRDER BRIDGE-EBL W/14' BIKE TRAIL

138'-10 & 151'-0 7/8 END SPANS MULTIPLE LENGTH INTERIOR SPANS

MOMENT & REACTION TABLE-UNIT 2

STA. 6792+60.93 - 52' LEFT ℄ I-74 OCTOBER, 2015

SCOTT COUNTY

IOWA DEPARTMENT OF TRANSPORTATION - HIGHWAY DIVISION

DESIGN SHEET NO. 100 OF 282 FILE NO. 30253 DESIGN NO. 3408

MOMENT AND REACTION TABLE
MOMENTS IN FOOT-KIPS REACTIONS IN KIPS

	LOAD NAME		LOAD, KIPS / FOOT	MAXIMUM POSITIVE MOMENTS			MAXIMUM NEGATIVE MOMENTS				MAXIMUM REACTIONS			
				SPAN 25	SPAN 26	SPAN 27	PIER 25	PIER 26	PIER 27	PIER 28	PIER 25	PIER 26	PIER 27	PIER 28
GIRDER A	DC1		1.12 TO 1.17	1656	1617	2050	0	-3247	-3608	0	66	226	232	73
	DC2		0.3	328	383	402	0	-691	-671	0	14	58	49	15
	DW		0.207	299	324	368	0	-505	-563	0	11	38	40	13
	LIVE LOAD + IMPACT HL-93	TRUCK+LANE+D.L.A.	DISTRIBUTION FACTOR = VARIES	2856	3298	3211	0	-2691*	-2845*	0	95	193*	199*	105
		TANDEM+LANE+D.L.A.		2412	2787	2697	0	-1895	-2000	0	80	141	146	86
	TOTAL		----	5139	5622	6031	0	-7134	-7687	0	186	515	519	206
GIRDER B	DC1		1.15 TO 1.22	1197	1020	1479	0	-2676	-3087	0	52	190	203	60
	DC2		0.15	193	221	246	0	-378	-410	0	8	29	29	8
	DW		0.207	250	246	304	0	-426	-484	0	10	33	35	11
	LIVE LOAD + IMPACT HL-93	TRUCK+LANE+D.L.A.	DISTRIBUTION FACTOR = VARIES	2121	2175	2298	0	-1949*	-2064*	0	96	169*	175*	101
		TANDEM+LANE+D.L.A.		1821	1851	1943	0	-1369	-1440	0	86	132	136	88
	TOTAL		----	3761	3662	4327	0	-5429	-6045	0	165	420	442	181
GIRDER C	DC1		1.15 TO 1.22	1314	1114	1588	0	-2833	-3234	0	56	195	208	62
	DC2		0.15	149	184	199	0	-279	-324	0	6	21	23	7
	DW		0.207	266	263	320	0	-450	-507	0	10	34	36	11
	LIVE LOAD + IMPACT HL-93	TRUCK+LANE+D.L.A.	DISTRIBUTION FACTOR = VARIES	2076	2048	2176	0	-1944*	-2043*	0	91	168*	173*	97
		TANDEM+LANE+D.L.A.		1778	1726	1827	0	-1356	-1404	0	80	130	132	83
	TOTAL		----	3805	3609	4283	0	-5506	-6108	0	163	419	441	178
GIRDER D	DC1		1.15 TO 1.22	1357	1145	1625	0	-2899	-3297	0	58	198	212	63
	DC2		0	130	170	187	0	-229	-275	0	4	14	16	5
	DW		0.207	272	268	325	0	-458	-515	0	11	35	37	12
	LIVE LOAD + IMPACT HL-93	TRUCK+LANE+D.L.A.	DISTRIBUTION FACTOR = VARIES	2089	2012	2148	0	-1976*	-2070*	0	90	171*	175*	98
		TANDEM+LANE+D.L.A.		1783	1681	1779	0	-1365	-1413	0	74	121	124	76
	TOTAL		----	3848	3595	4285	0	-5562	-6157	0	163	419	440	179
GIRDER E	DC1		1.15 TO 1.22	1321	1111	1586	0	-2838	-3248	0	57	195	208	61
	DC2		0.15	152	178	203	0	-272	-321	0	6	20	23	7
	DW		0.207	267	263	319	0	-450	-506	0	10	34	36	11
	LIVE LOAD + IMPACT HL-93	TRUCK+LANE+D.L.A.	DISTRIBUTION FACTOR = VARIES	2069	2012	2155	0	-1922*	-2027*	0	91	166*	173*	103
		TANDEM+LANE+D.L.A.		1772	1659	1765	0	-1331	-1386	0	71	118	123	76
	TOTAL		----	3809	3564	4263	0	-5482	-6102	0	164	417	440	183
GIRDER F	DC1		1.15 TO 1.22	1205	1014	1481	0	-2669	-3101	0	54	188	204	58
	DC2		0.15	199	210	252	0	-355	-402	0	8	27	28	9
	DW		0.207	251	247	305	0	-425	-482	0	10	33	35	11
	LIVE LOAD + IMPACT HL-93	TRUCK+LANE+D.L.A.	DISTRIBUTION FACTOR = VARIES	2122	2124	2279	0	-1900*	-2077*	0	95	162*	179*	98
		TANDEM+LANE+D.L.A.		1821	1737	1960	0	-1332	-1444	0	71	115	125	70
	TOTAL		----	3777	3595	4317	0	-5349	-6062	0	167	411	446	175
GIRDER G	DC1		1.12 TO 1.17	1655	1585	2058	0	-3203	-3604	0	66	226	232	74
	DC2		0.3	344	366	406	0	-657	-654	0	14	60	48	15
	DW		0.207	298	327	370	0	-504	-563	0	11	38	40	13
	LIVE LOAD + IMPACT HL-93	TRUCK+LANE+D.L.A.	DISTRIBUTION FACTOR = VARIES	2859	3311	3166	0	-2662*	-2772*	0	99	196*	196*	100
		TANDEM+LANE+D.L.A.		2403	2782	2675	0	-1893	-1906	0	66	127	129	67
	TOTAL		----	5156	5589	6000	0	-7026	-7593	0	190	520	515	201

NOTES:
D.L.A. = DYNAMIC LOAD ALLOWANCE.

MOMENTS & REACTIONS SHOWN ARE UNFACTORED.

DC1 INCLUDES ALL NON-COMPOSITE DEAD LOADS SUCH AS STEEL GIRDER AND CONCRETE SLAB WEIGHT.

DC2 INCLUDES ALL COMPOSITE DEAD LOADS SUCH AS BARRIER RAILS.

DW INCLUDES THE WEIGHT OF A 20 PSF FUTURE WEARING SURFACE AND UTILITIES.

* 0.9 (TWO DESIGN TRUCKS + LANE)

whks
engineers + planners + land surveyors

DESIGN FOR VARIABLE SKEW (L.A.)

2271'-6 x VARI. CONTINUOUS WELDED GIRDER BRIDGE-EBL W/14' BIKE TRAIL

138'-10 & 151'-0 7/8 END SPANS MULTIPLE LENGTH INTERIOR SPANS

MOMENT & REACTION TABLE-UNIT 3

STA. 6792+60.93 - 52' LEFT ℄ I-74 OCTOBER, 2015

SCOTT COUNTY

IOWA DEPARTMENT OF TRANSPORTATION - HIGHWAY DIVISION

DESIGN SHEET NO. 101 OF 282 FILE NO. 30253 DESIGN NO. 3408

MOMENT AND REACTION TABLE
MOMENTS IN FOOT-KIPS REACTIONS IN KIPS

	LOAD NAME		LOAD, KIPS / FOOT	MAXIMUM POSITIVE MOMENTS				MAXIMUM NEGATIVE MOMENTS					MAXIMUM REACTIONS				
				SPAN 28	SPAN 29	SPAN 30	SPAN 31	PIER 28	PIER 29	PIER 30	PIER 31	ABUT. 32	PIER 28	PIER 29	PIER 30	PIER 31	ABUT. 32
GIRDER A	DC1		1.08 TO 1.17	2087	829	821	2289	0	-2980	-1838	-2940	0	73	219	154	204	76
	DC2		0.265	359	176	178	383	0	-544	-393	-547	0	13	40	34	40	14
	DW		0.207	347	155	155	379	0	-492	-334	-503	0	12	35	28	35	13
	LIVE LOAD + IMPACT HL-93	TRUCK+LANE+D.L.A.	DISTRIBUTION FACTOR = VARIES	2841	2199	2297	3042	0	-2865*	-2596*	-2912*	0	94	186	178	188	102
		TANDEM+LANE+D.L.A.		2399	1879	1960	2567	0	-1949	-1736	-1981	0	80	134	127	136	85
	TOTAL		----	5634	3359	3451	6093	0	-6881	-5161	-6902	0	192	481	395	468	205
GIRDER B	DC1		1.14 TO 1.24	1862	734	667	2093	0	-2798	-1942	-2818	0	67	203	160	202	73
	DC2		0.133	254	114	107	272	0	-363	-263	-371	0	9	25	21	26	8
	DW		0.207	336	149	142	366	0	-486	-349	-492	0	12	35	29	35	12
	LIVE LOAD + IMPACT HL-93	TRUCK+LANE+D.L.A.	DISTRIBUTION FACTOR = VARIES	2452	1826	1833	2558	0	-2499*	-2398*	-2525*	0	104	187	187	193	105
		TANDEM+LANE+D.L.A.		2112	1569	1621	2188	0	-1712	-1611	-1736	0	89	144	141	145	91
	TOTAL		----	4904	2823	2749	5289	0	-6146	-4952	-6206	0	191	450	398	457	198
GIRDER C	DC1		1.14 TO 1.24	1943	765	713	2146	0	-2849	-1986	-2897	0	70	201	161	204	74
	DC2		0.133	184	72	68	203	0	-250	-166	-260	0	7	18	14	19	7
	DW		0.207	339	150	145	367	0	-488	-348	-495	0	12	35	29	35	12
	LIVE LOAD + IMPACT HL-93	TRUCK+LANE+D.L.A.	DISTRIBUTION FACTOR = VARIES	2326	1722	1738	2389	0	-2461*	-2347*	-2477*	0	97	178	177	183	98
		TANDEM+LANE+D.L.A.		1991	1454	1515	2042	0	-1670	-1560	-1691	0	83	136	132	138	84
	TOTAL		----	4792	2709	2664	5105	0	-6048	-4847	-6129	0	185	432	381	440	190
GIRDER D	DC1		1.14 TO 1.24	1978	772	722	2162	0	-2871	-2007	-2931	0	71	203	163	206	74
	DC2		0	159	58	54	177	0	-190	-111	-200	0	4	11	7	12	5
	DW		0.207	340	150	145	367	0	-488	-349	-497	0	12	35	29	35	12
	LIVE LOAD + IMPACT HL-93	TRUCK+LANE+D.L.A.	DISTRIBUTION FACTOR = VARIES	2324	1703	1729	2369	0	-2510*	-2393*	-2528*	0	95	179	179	186	95
		TANDEM+LANE+D.L.A.		1984	1414	1500	2020	0	-1700	-1594	-1721	0	76	125	124	131	74
	TOTAL		----	4801	2683	2650	5075	0	-6059	-4860	-6156	0	181	428	378	439	186
GIRDER E	DC1		1.14 TO 1.24	1957	761	707	2133	0	-2831	-1981	-2906	0	70	201	161	205	73
	DC2		0.133	181	73	67	206	0	-251	-166	-259	0	6	18	14	19	7
	DW		0.207	339	150	144	365	0	-487	-348	-498	0	12	35	29	35	12
	LIVE LOAD + IMPACT HL-93	TRUCK+LANE+D.L.A.	DISTRIBUTION FACTOR = VARIES	2326	1715	1737	2390	0	-2451*	-2356*	-2479*	0	97	175	179	184	98
		TANDEM+LANE+D.L.A.		1990	1412	1510	2043	0	-1663	-1569	-1684	0	73	123	123	129	73
	TOTAL		----	4803	2699	2655	5094	0	-6020	-4851	-6142	0	185	430	384	443	190
GIRDER F	DC1		1.14 TO 1.24	1883	728	655	2066	0	-2751	-1929	-2827	0	69	197	160	201	71
	DC2		0.133	252	114	107	274	0	-365	-263	-367	0	8	26	21	25	9
	DW		0.207	336	150	140	361	0	-484	-348	-495	0	12	35	29	35	12
	LIVE LOAD + IMPACT HL-93	TRUCK+LANE+D.L.A.	DISTRIBUTION FACTOR = VARIES	2449	1833	1797	2516	0	-2472*	-2381*	-2508*	0	104	191	184	190	105
		TANDEM+LANE+D.L.A.		2098	1608	1573	2163	0	-1694	-1610	-1728	0	74	130	127	131	73
	TOTAL		----	4920	2825	2699	5217	0	-6072	-4921	-6197	0	192	448	394	451	198
GIRDER G	DC1		1.08 TO 1.17	2114	806	828	2245	0	-2903	-1813	-2933	0	73	222	154	206	75
	DC2		0.265	361	177	178	374	0	-540	-392	-545	0	14	40	34	41	13
	DW		0.207	347	156	154	372	0	-491	-333	-500	0	12	35	29	36	12
	LIVE LOAD + IMPACT HL-93	TRUCK+LANE+D.L.A.	DISTRIBUTION FACTOR = VARIES	2853	2189	2254	2950	0	-2839*	-2574*	-2876*	0	98	187	177	188	95
		TANDEM+LANE+D.L.A.		2408	1873	1924	2489	0	-1920	-1718	-1983	0	65	117	110	119	64
	TOTAL		----	5675	3328	3414	5941	0	-6773	-5112	-6854	0	196	484	395	471	196

NOTES:
D.L.A. = DYNAMIC LOAD ALLOWANCE.

MOMENTS & REACTIONS SHOWN ARE UNFACTORED.

DC1 INCLUDES ALL NON-COMPOSITE DEAD LOADS SUCH AS STEEL GIRDER AND CONCRETE SLAB WEIGHT.

DC2 INCLUDES ALL COMPOSITE DEAD LOADS SUCH AS BARRIER RAILS.

DW INCLUDES THE WEIGHT OF A 20 PSF FUTURE WEARING SURFACE AND UTILITIES.

* 0.9 (TWO DESIGN TRUCKS + LANE)

whks
engineers + planners + land surveyors

DESIGN FOR VARIABLE SKEW (L.A.)

2271'-6 x VARI. CONTINUOUS WELDED GIRDER BRIDGE-EBL W/14' BIKE TRAIL

138'-10 & 151'-0 7/8 END SPANS MULTIPLE LENGTH INTERIOR SPANS

MOMENT & REACTION TABLE-UNIT 4

STA. 6792+60.93 - 52' LEFT ℄ I-74 OCTOBER, 2015

SCOTT COUNTY

IOWA DEPARTMENT OF TRANSPORTATION - HIGHWAY DIVISION

DESIGN SHEET NO. 102 OF 282 FILE NO. 30253 DESIGN NO. 3408

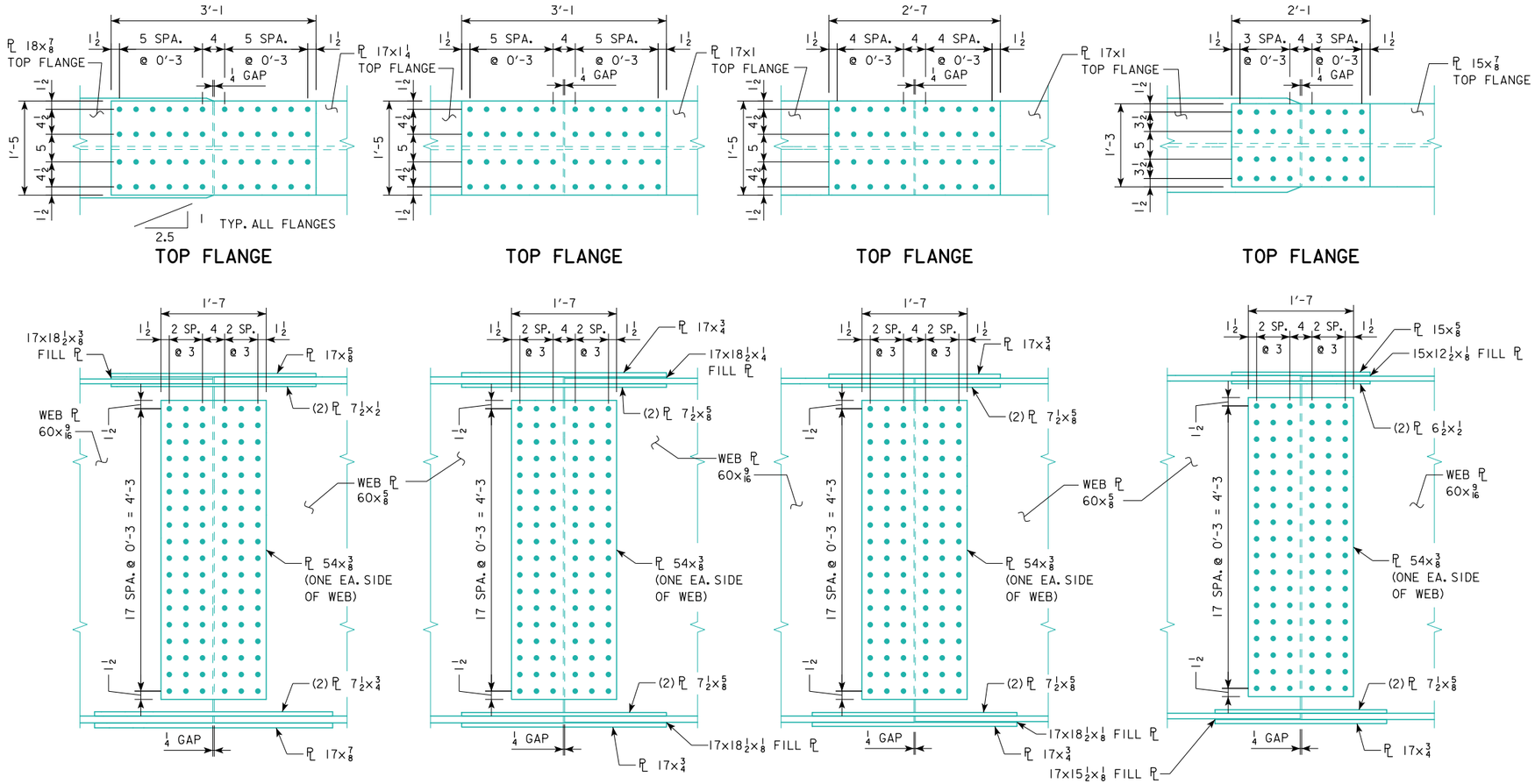

BOTTOM FLANGE
SPLICE NO. 1
GIRDER A

BOTTOM FLANGE
SPLICE NO. 2
GIRDER A

BOTTOM FLANGE
SPLICE NO. 3
GIRDER A

BOTTOM FLANGE
SPLICE NO. 4
GIRDER A

whks
engineers + planners + land surveyors

DESIGN FOR VARIABLE SKEW (L.A.)

2271'-6 x VARI. CONTINUOUS WELDED GIRDER BRIDGE-EBL W/14' BIKE TRAIL

138'-10 & 151'-0 7/8 END SPANS MULTIPLE LENGTH INTERIOR SPANS

SPLICE DETAILS GIRDER A - UNIT 1

STA. 6792+60.93 - 52' LEFT ℄ I-74 OCTOBER, 2015

SCOTT COUNTY

IOWA DEPARTMENT OF TRANSPORTATION - HIGHWAY DIVISION

DESIGN SHEET NO. 103 OF 282 FILE NO. 30253 DESIGN NO. 3408

DESIGN TEAM MG / BB / CF | SCOTT COUNTY | PROJECT NUMBER BRFIM-074-1(200)5--05-82 | SHEET NUMBER 104

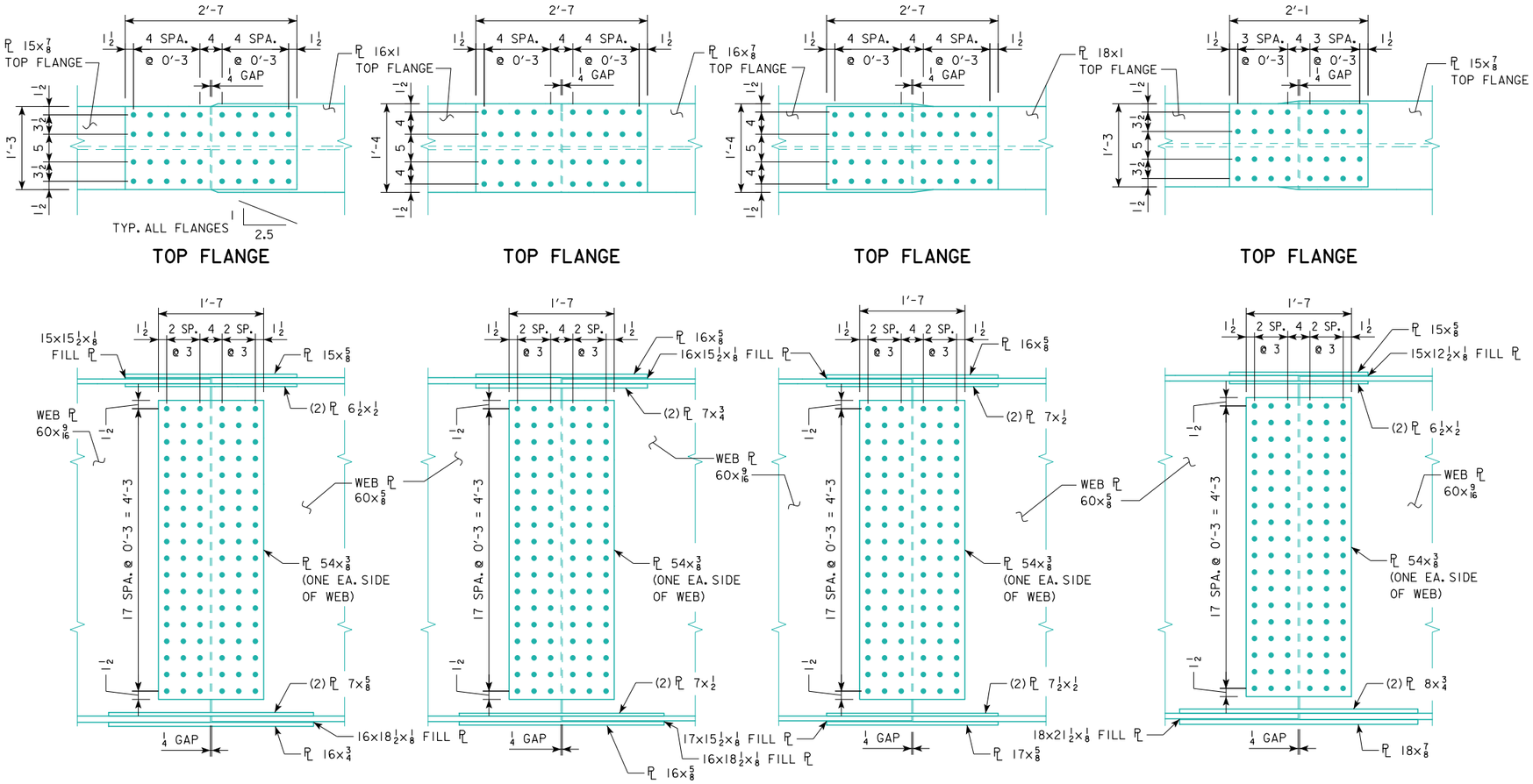

BOTTOM FLANGE
SPLICE NO. 5
GIRDER A

BOTTOM FLANGE
SPLICE NO. 6
GIRDER A

BOTTOM FLANGE
SPLICE NO. 7
GIRDER A

BOTTOM FLANGE
SPLICE NO. 8
GIRDER A

whks
engineers + planners + land surveyors

DESIGN FOR VARIABLE SKEW (L.A.)

2271'-6 x VARI. CONTINUOUS WELDED GIRDER BRIDGE-EBL W/14' BIKE TRAIL

138'-10 & 151'-0 7/8 END SPANS MULTIPLE LENGTH INTERIOR SPANS

SPLICE DETAILS GIRDER A - UNIT 1

STA. 6792+60.93 - 52' LEFT ℄ I-74 OCTOBER, 2015

SCOTT COUNTY

IOWA DEPARTMENT OF TRANSPORTATION - HIGHWAY DIVISION

DESIGN SHEET NO. 104 OF 282 FILE NO. 30253 DESIGN NO. 3408

DESIGN TEAM MG / BB / CF	SCOTT COUNTY	PROJECT NUMBER BRFIM-074-1(200)5--05-82	SHEET NUMBER 105

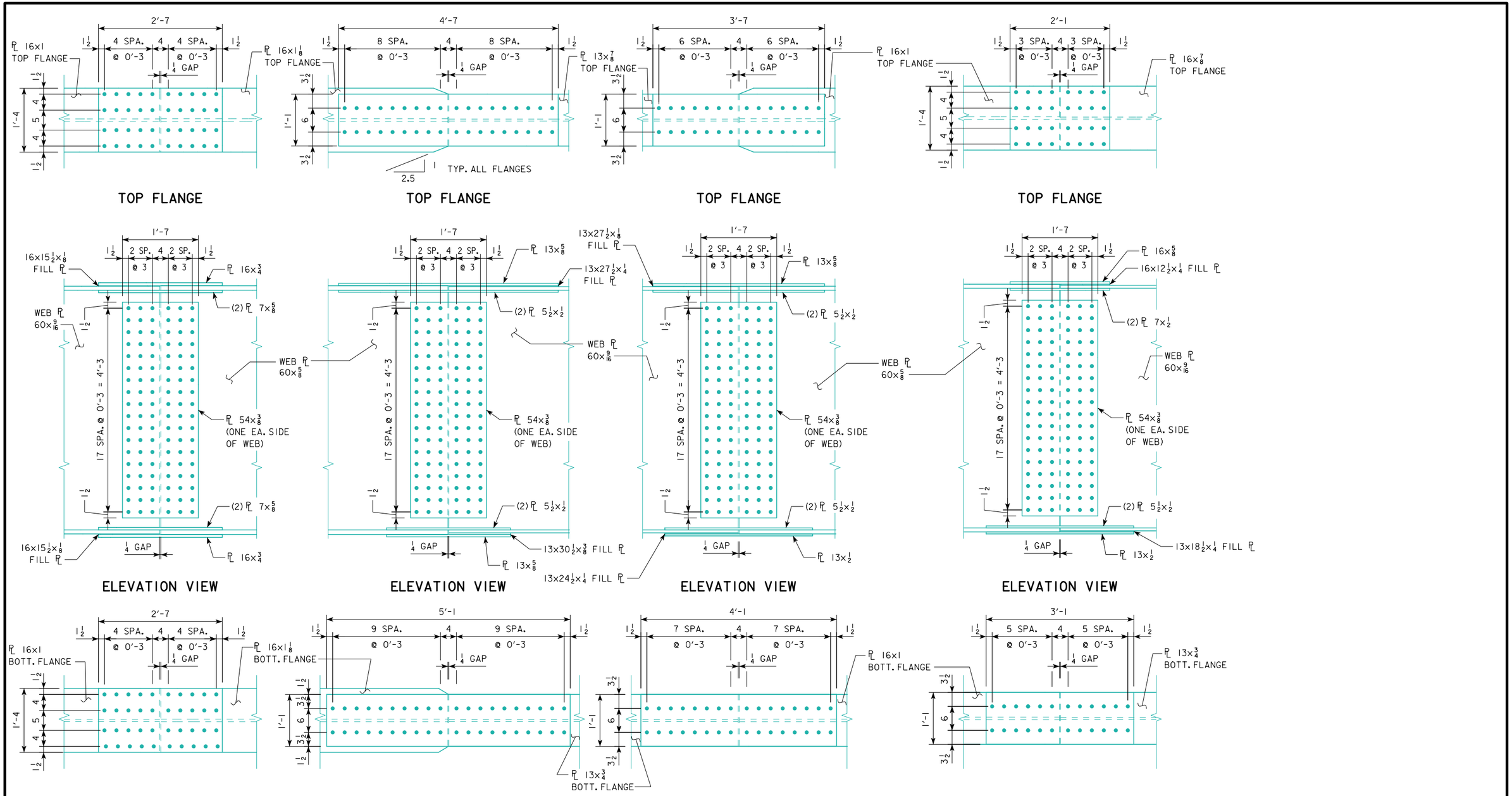

BOTTOM FLANGE
SPLICE NO. 1
GIRDERS B THRU K

BOTTOM FLANGE
SPLICE NO. 2
GIRDERS B THRU K

BOTTOM FLANGE
SPLICE NO. 3
GIRDERS B THRU K

BOTTOM FLANGE
SPLICE NO. 4
GIRDERS B THRU K

whks
engineers + planners + land surveyors

DESIGN FOR VARIABLE SKEW (L.A.)

2271'-6 x VARI. CONTINUOUS WELDED GIRDER BRIDGE-EBL W/14' BIKE TRAIL

138'-10 & 151'-0 7/8 END SPANS MULTIPLE LENGTH INTERIOR SPANS

SPLICE DETAILS GIRDERS B-K UNIT 1

STA. 6792+60.93 - 52' LEFT ℄ I-74 OCTOBER, 2015

SCOTT COUNTY

IOWA DEPARTMENT OF TRANSPORTATION - HIGHWAY DIVISION

DESIGN SHEET NO. 105 OF 282 FILE NO. 30253 DESIGN NO. 3408

DESIGN TEAM MG / BB / CF	SCOTT COUNTY	PROJECT NUMBER BRFIM-074-1(200)5--05-82	SHEET NUMBER 106

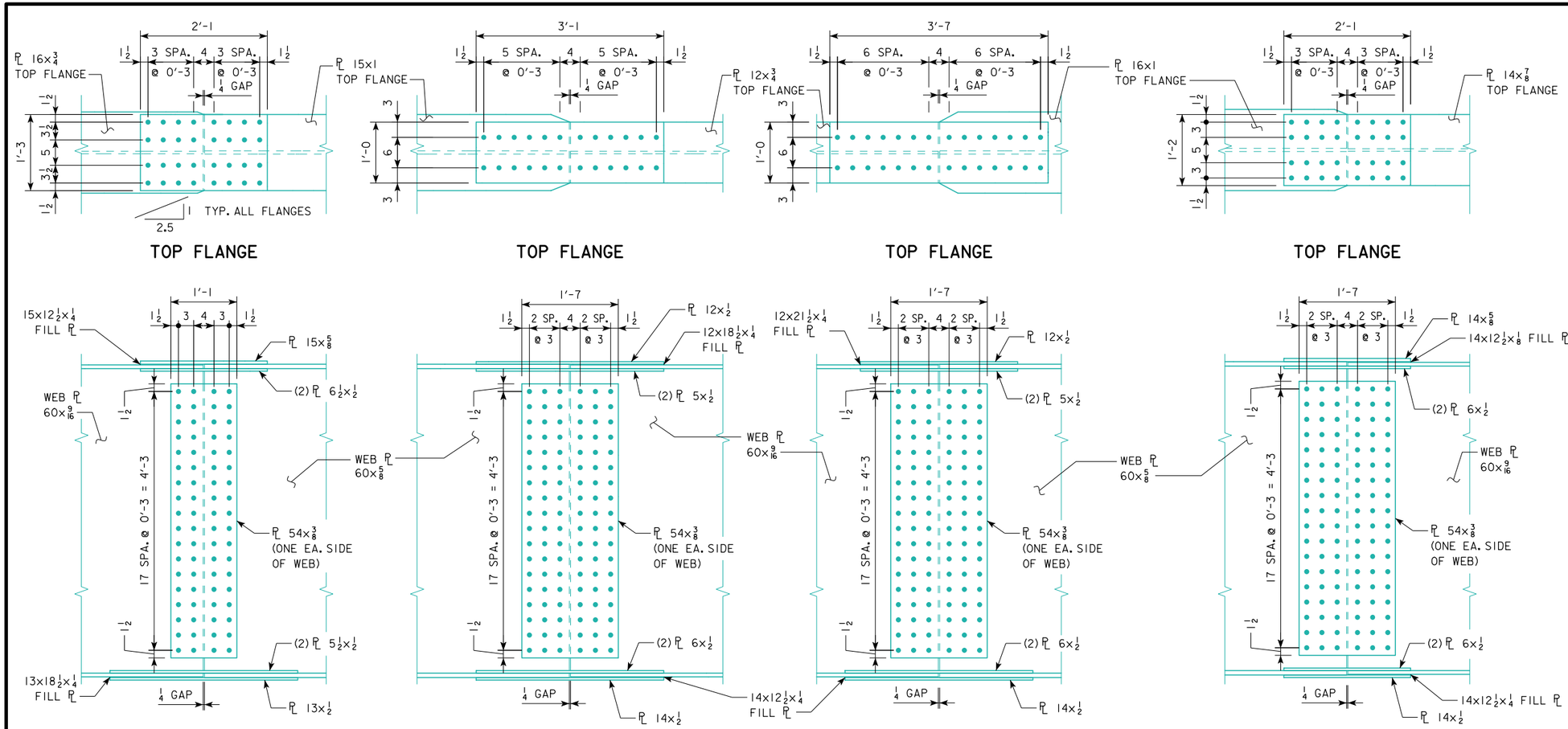

BOTTOM FLANGE
SPLICE NO. 5
GIRDERS B THRU K

BOTTOM FLANGE
SPLICE NO. 6
GIRDERS B THRU K

BOTTOM FLANGE
SPLICE NO. 7
GIRDERS B THRU K

BOTTOM FLANGE
SPLICE NO. 8
GIRDERS B THRU K

whks
engineers + planners + land surveyors

DESIGN FOR VARIABLE SKEW (L.A.)

2271'-6 x VARI. CONTINUOUS WELDED GIRDER BRIDGE-EBL W/14' BIKE TRAIL

138'-10 & 151'-0 7/8 END SPANS MULTIPLE LENGTH INTERIOR SPANS

SPLICE DETAILS GIRDERS B-K UNIT 1

STA. 6792+60.93 - 52' LEFT ℄ I-74 OCTOBER, 2015

SCOTT COUNTY

IOWA DEPARTMENT OF TRANSPORTATION - HIGHWAY DIVISION

DESIGN SHEET NO. 106 OF 282 FILE NO. 30253 DESIGN NO. 3408

DESIGN TEAM MG / BB / CF | SCOTT COUNTY | PROJECT NUMBER BRFIM-074-1(200)5--05-82 | SHEET NUMBER 107

1:58:07 PM untitled c:\pwise_work\do_not_delete\dms05641\82074200.brg 4/16/2016 $MODEL

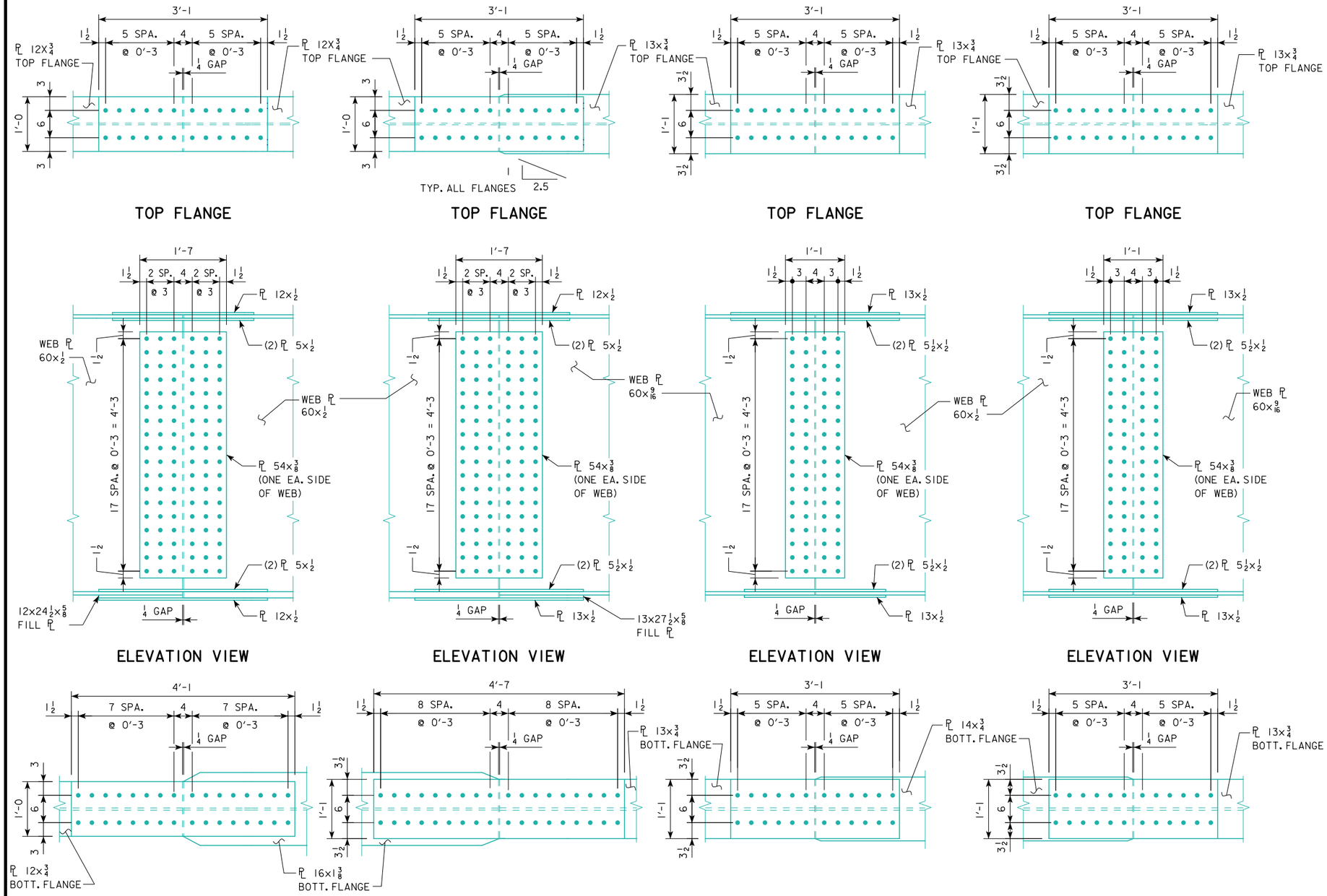

SPLICE NO. 2
GIRDER L

SPLICE NO. 3
GIRDER L

SPLICE NO. 4
GIRDER L

SPLICE NO. 5
GIRDER L

whks
engineers + planners + land surveyors

DESIGN FOR VARIABLE SKEW (L.A.)

2271'-6 x VARI. CONTINUOUS WELDED GIRDER BRIDGE-EBL W/14' BIKE TRAIL

138'-10 & 151'-0 7/8 END SPANS MULTIPLE LENGTH INTERIOR SPANS

SPLICE DETAILS GIRDER L - UNIT 1

STA. 6792+60.93 - 52' LEFT ℄ I-74 OCTOBER, 2015

SCOTT COUNTY

IOWA DEPARTMENT OF TRANSPORTATION - HIGHWAY DIVISION

DESIGN SHEET NO. 107 OF 282 FILE NO. 30253 DESIGN NO. 3408

DESIGN TEAM MG / BB / CF | SCOTT COUNTY | PROJECT NUMBER BRFIM-074-1(200)5--05-82 | SHEET NUMBER 108

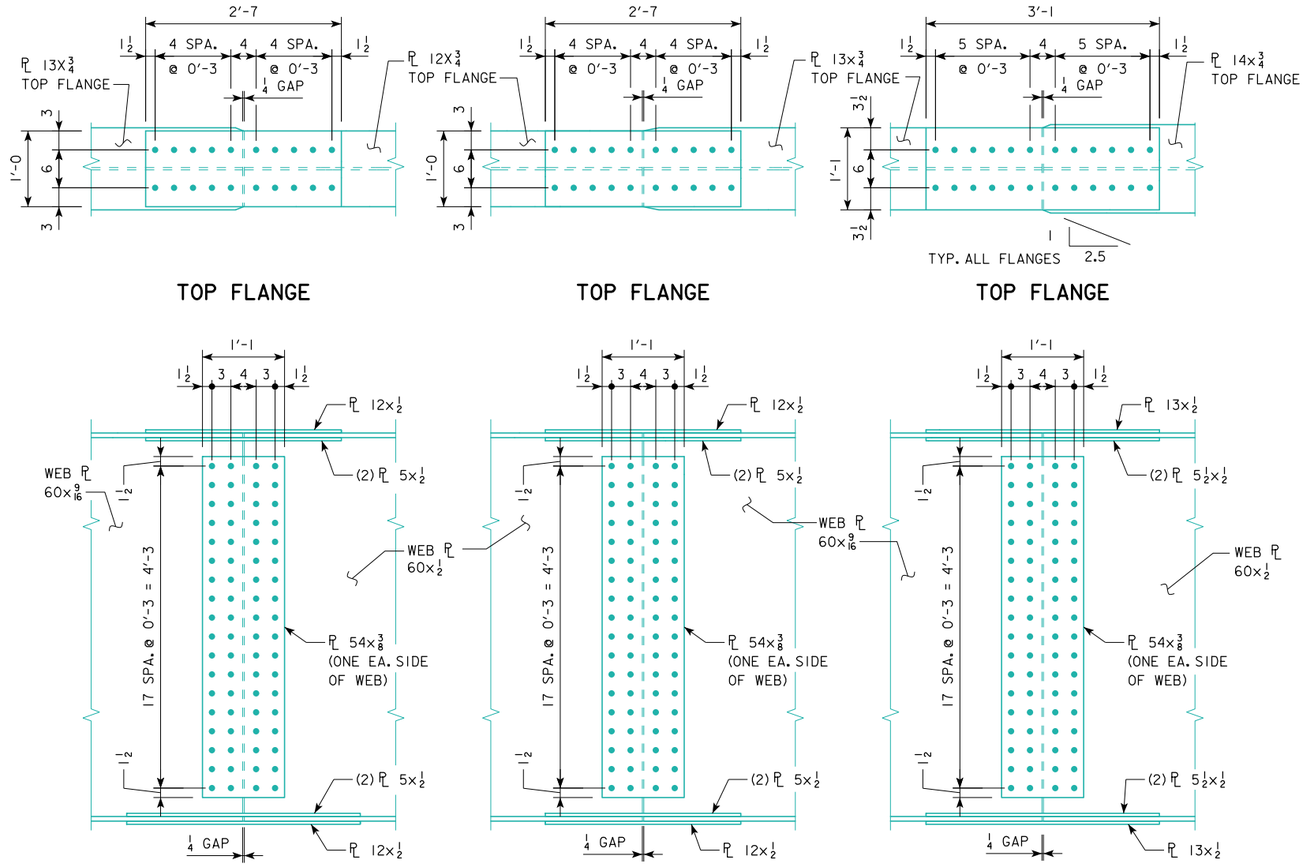

TOP FLANGE

TOP FLANGE

TOP FLANGE

ELEVATION VIEW

ELEVATION VIEW

ELEVATION VIEW

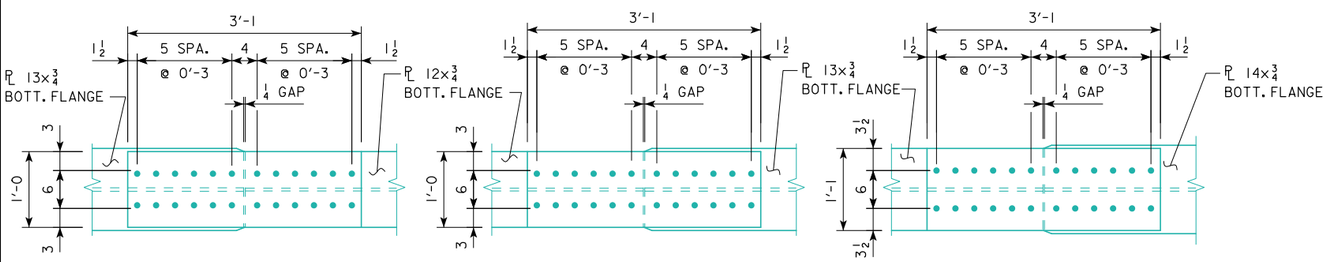

BOTTOM FLANGE
SPLICE NO. 6
GIRDER L

BOTTOM FLANGE
SPLICE NO. 7
GIRDER L

BOTTOM FLANGE
SPLICE NO. 8
GIRDER L

whks
engineers + planners + land surveyors

DESIGN FOR VARIABLE SKEW (L.A.)

2271'-6 x VARI. CONTINUOUS WELDED GIRDER BRIDGE-EBL W/14' BIKE TRAIL

138'-10 & 151'-0 7/8 END SPANS MULTIPLE LENGTH INTERIOR SPANS

SPLICE DETAILS GIRDER L - UNIT 1

STA. 6792+60.93 - 52' LEFT ℄ I-74 OCTOBER, 2015

SCOTT COUNTY

IOWA DEPARTMENT OF TRANSPORTATION - HIGHWAY DIVISION

DESIGN SHEET NO. 108 OF 282 FILE NO. 30253 DESIGN NO. 3408

DESIGN TEAM MG / BB / CF	SCOTT COUNTY	PROJECT NUMBER BRFIM-074-1(200)5--05-82	SHEET NUMBER 109

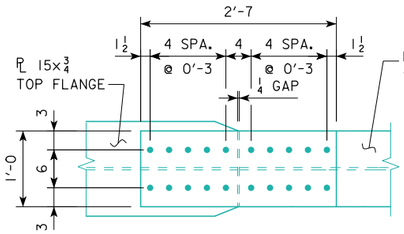

TOP FLANGE

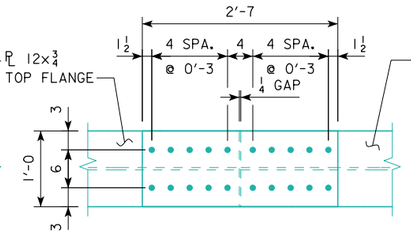

TOP FLANGE

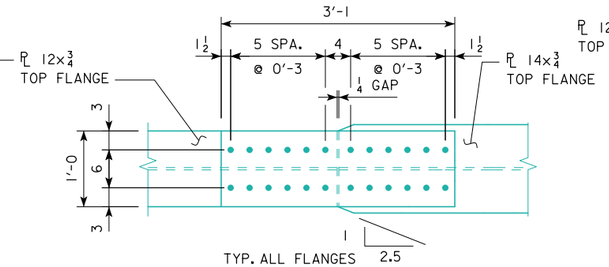

TOP FLANGE

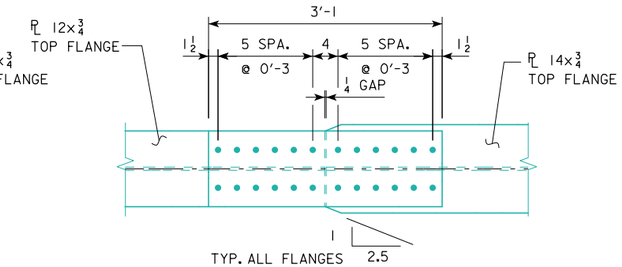

TOP FLANGE

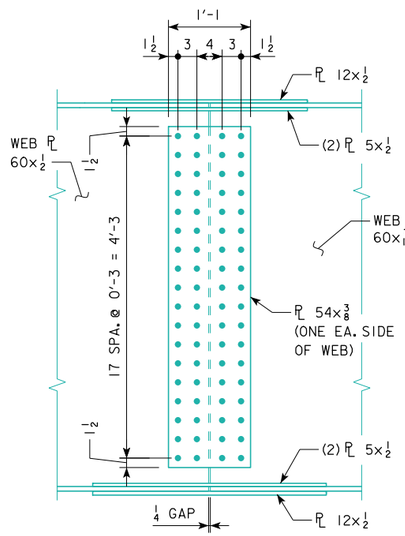

ELEVATION VIEW

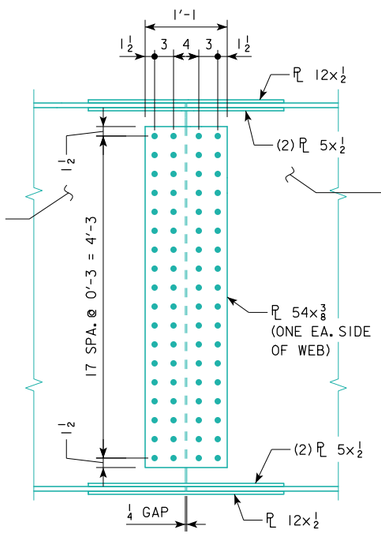

ELEVATION VIEW

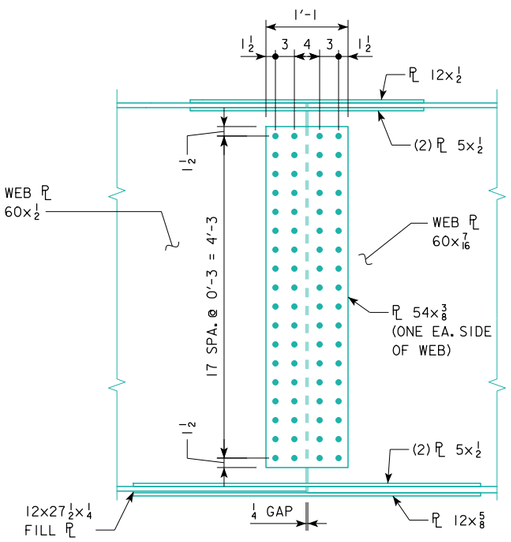

ELEVATION VIEW

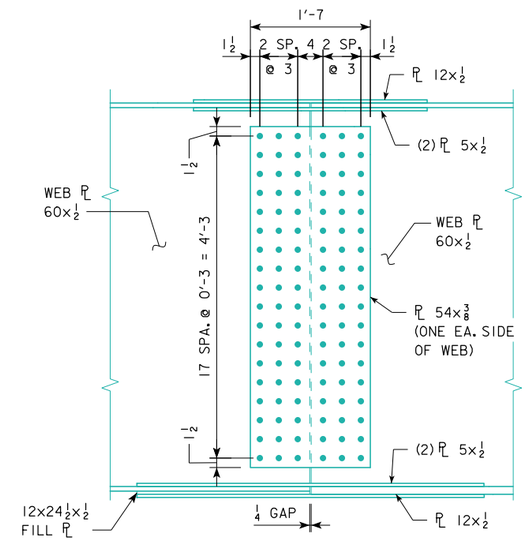

ELEVATION VIEW

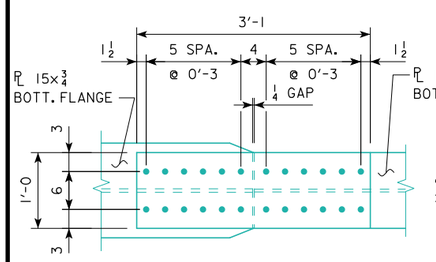

BOTTOM FLANGE
SPLICE NO. 6
GIRDER M

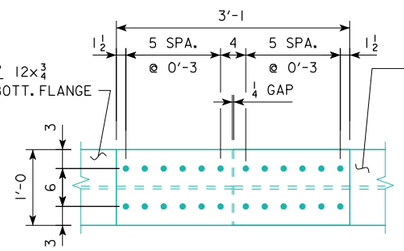

BOTTOM FLANGE
SPLICE NO. 7
GIRDER M

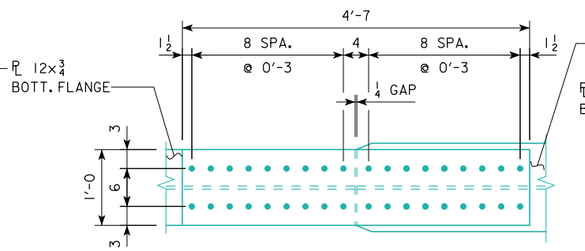

BOTTOM FLANGE
SPLICE NO. 8
GIRDER M

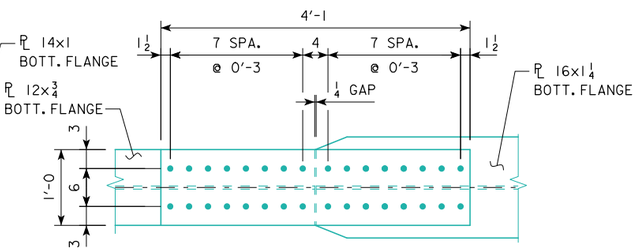

BOTTOM FLANGE
SPLICE NO. 8
GIRDER N

whks
engineers + planners + land surveyors

DESIGN FOR VARIABLE SKEW (L.A.)

2271'-6 x VARI. CONTINUOUS WELDED GIRDER BRIDGE-EBL W/14' BIKE TRAIL

138'-10 & 151'-0⅞ END SPANS MULTIPLE LENGTH INTERIOR SPANS

SPLICE DETAILS GIRDERS M&N UNIT 1

STA. 6792+60.93 - 52' LEFT ℄ I-74 OCTOBER, 2015

SCOTT COUNTY

IOWA DEPARTMENT OF TRANSPORTATION - HIGHWAY DIVISION

DESIGN SHEET NO. 109 OF 282 FILE NO. 30253 DESIGN NO. 3408

DESIGN TEAM MG / BB / CF	SCOTT COUNTY	PROJECT NUMBER BRFIM-074-1(200)5--05-82	SHEET NUMBER 110

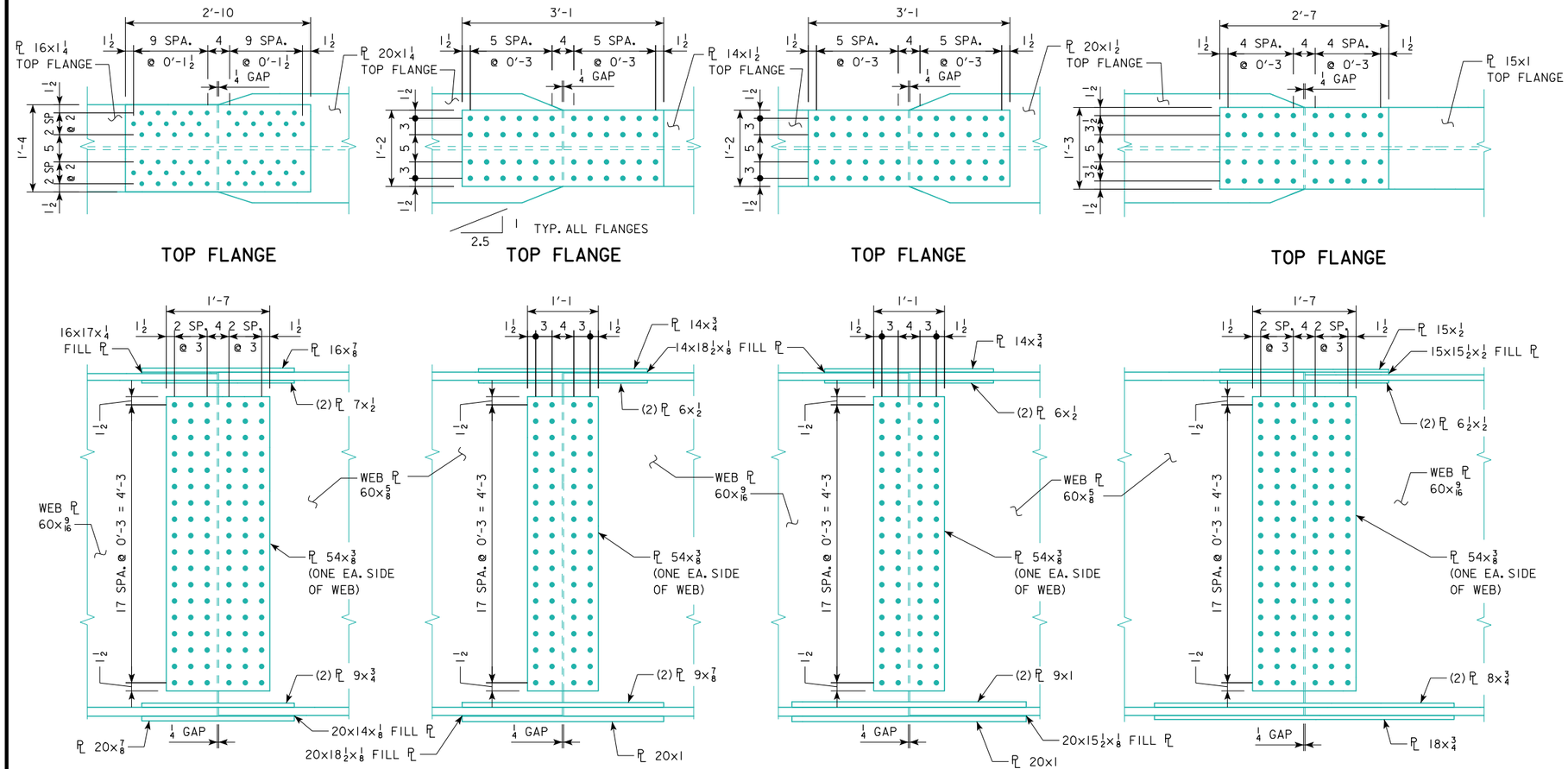

SPLICE NO. 1
GIRDER P

SPLICE NO. 2
GIRDER P

SPLICE NO. 3
GIRDER P

SPLICE NO. 4
GIRDER P

whks
engineers + planners + land surveyors

DESIGN FOR VARIABLE SKEW (L.A.)

2271'-6 x VARI. CONTINUOUS WELDED GIRDER BRIDGE-EBL W/14' BIKE TRAIL

138'-10 & 151'-0⅞ END SPANS MULTIPLE LENGTH INTERIOR SPANS

SPLICE DETAILS GIRDER P - UNIT 1

STA. 6792+60.93 - 52' LEFT ℄ I-74 OCTOBER, 2015

SCOTT COUNTY

IOWA DEPARTMENT OF TRANSPORTATION - HIGHWAY DIVISION

DESIGN SHEET NO. 110 OF 282 FILE NO. 30253 DESIGN NO. 3408

DESIGN TEAM MG / BB / CF	SCOTT COUNTY	PROJECT NUMBER BRFIM-074-1(200)5--05-82	SHEET NUMBER 111

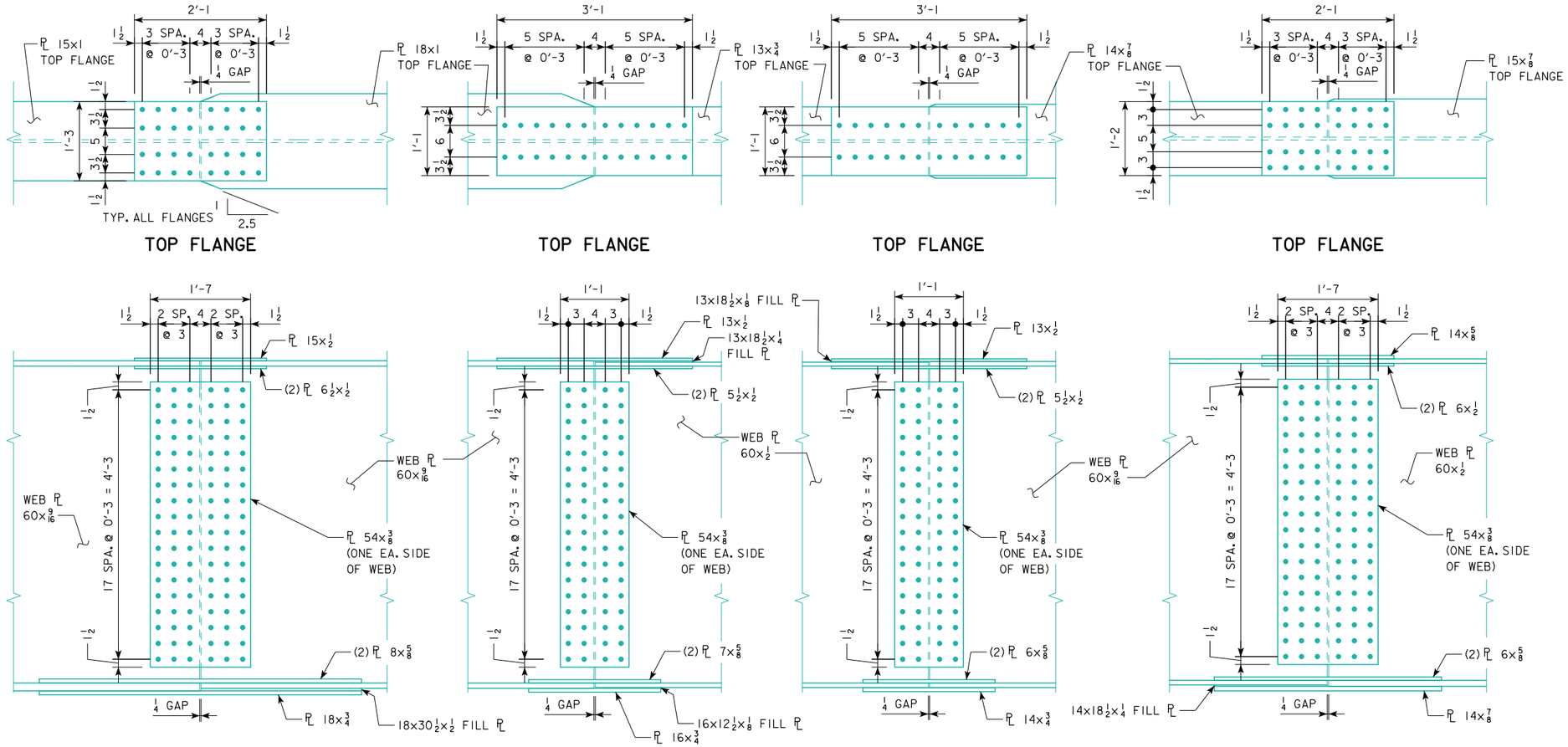

SPLICE NO. 5
GIRDER P

SPLICE NO. 6
GIRDER P

SPLICE NO. 7
GIRDER P

SPLICE NO. 8
GIRDER P

whks
engineers + planners + land surveyors

DESIGN FOR VARIABLE SKEW (L.A.)

2271'-6 x VARI. CONTINUOUS WELDED GIRDER BRIDGE-EBL W/14' BIKE TRAIL

138'-10 & 151'-0 7/8 END SPANS MULTIPLE LENGTH INTERIOR SPANS

SPLICE DETAILS GIRDER P - UNIT 1

STA. 6792+60.93 - 52' LEFT ℄ I-74 OCTOBER, 2015

SCOTT COUNTY

IOWA DEPARTMENT OF TRANSPORTATION - HIGHWAY DIVISION

DESIGN SHEET NO. 111 OF 282 FILE NO. 30253 DESIGN NO. 3408

DESIGN TEAM MG / BB / CF | SCOTT COUNTY | PROJECT NUMBER BRFIM-074-1(200)5--05-82 | SHEET NUMBER 112

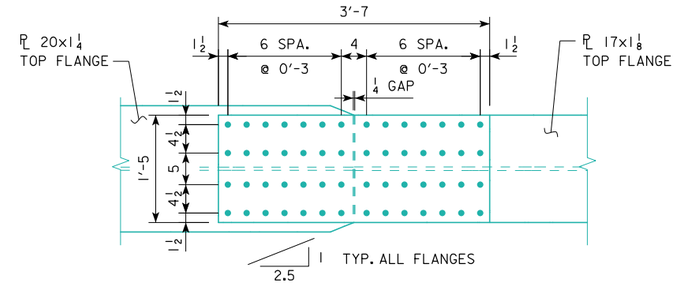

TOP FLANGE

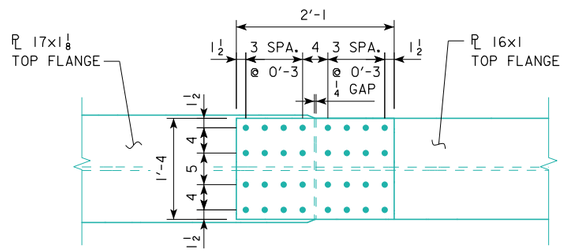

TOP FLANGE

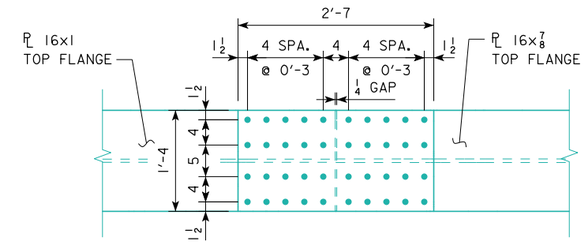

TOP FLANGE

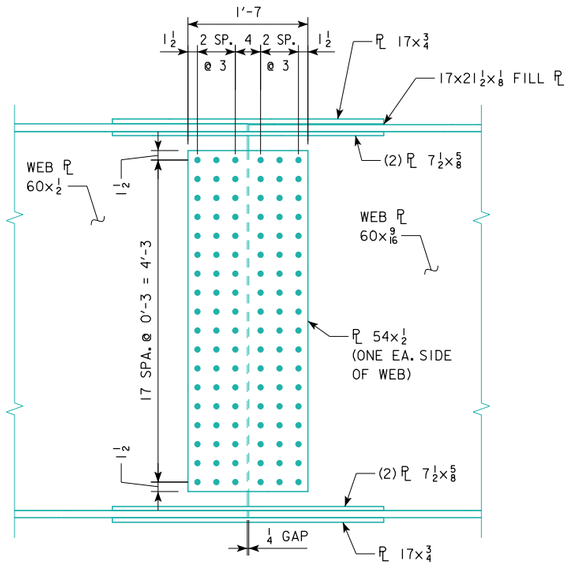

ELEVATION VIEW

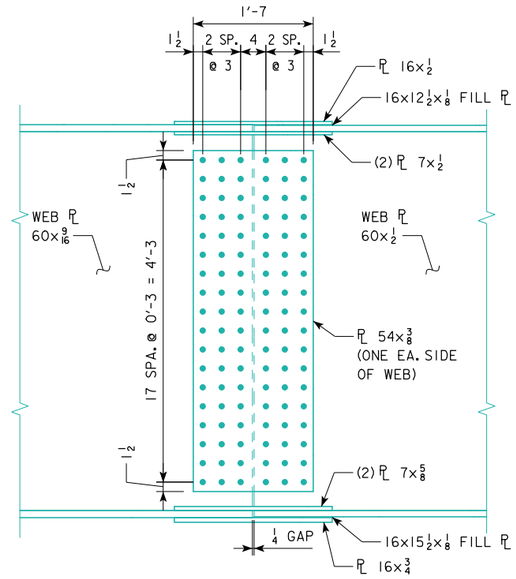

ELEVATION VIEW

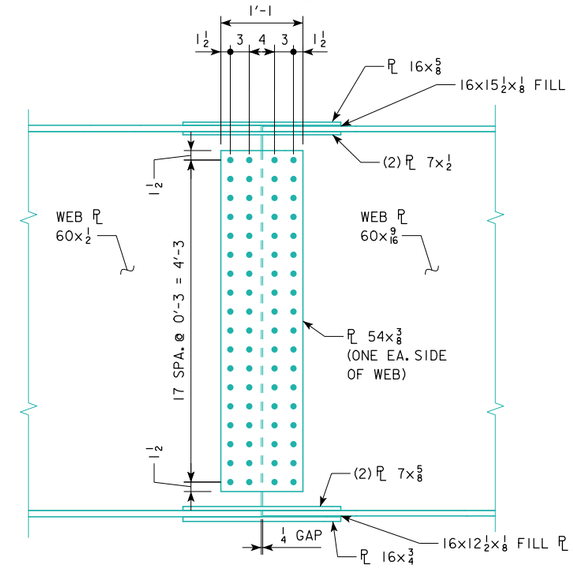

ELEVATION VIEW

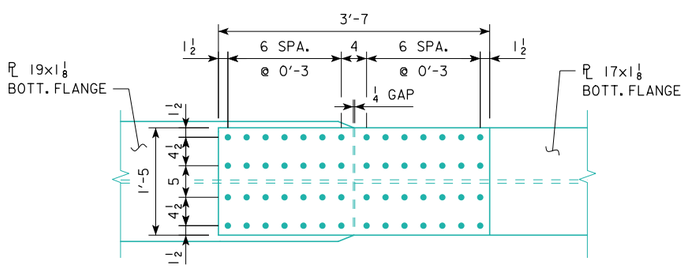

BOTTOM FLANGE

SPLICE NO. 1

GIRDERS A & G

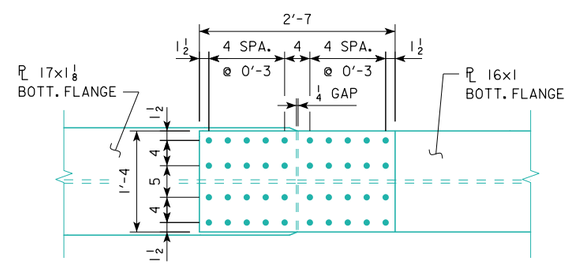

BOTTOM FLANGE

SPLICE NO. 2

GIRDERS A & G

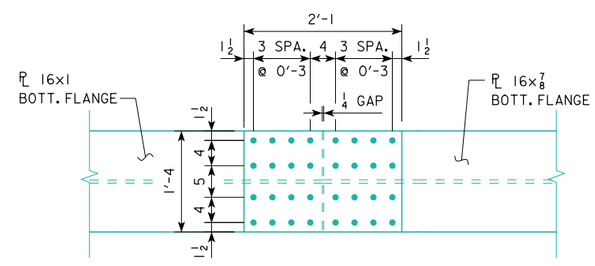

BOTTOM FLANGE

SPLICE NO. 3

GIRDERS A & G

whks
engineers + planners + land surveyors

DESIGN FOR VARIABLE SKEW (L.A.)

2271'-6 x VARI. CONTINUOUS WELDED GIRDER BRIDGE-EBL W/14' BIKE TRAIL

138'-10 & 151'-0 7/8 END SPANS MULTIPLE LENGTH INTERIOR SPANS

SPLICE DETAILS GIRDERS A&G UNIT 2

STA. 6792+60.93 - 52' LEFT ℄ I-74 OCTOBER, 2015

SCOTT COUNTY

IOWA DEPARTMENT OF TRANSPORTATION - HIGHWAY DIVISION

DESIGN SHEET NO. 112 OF 282 FILE NO. 30253 DESIGN NO. 3408

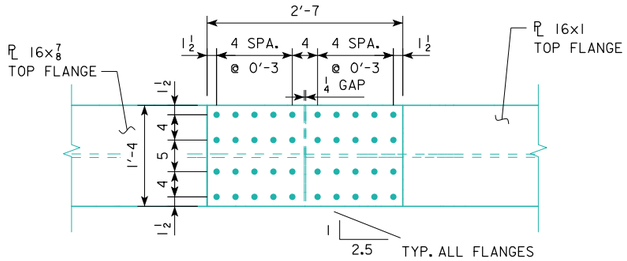

TOP FLANGE

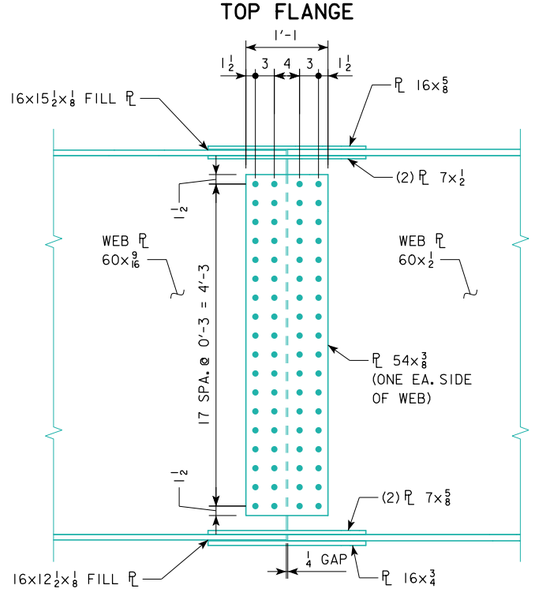

ELEVATION VIEW

BOTTOM FLANGE
SPLICE NO. 4
GIRDERS A & G

TOP FLANGE

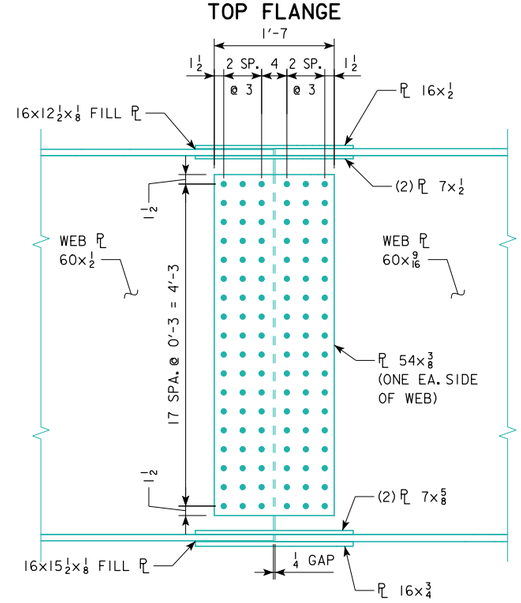

ELEVATION VIEW

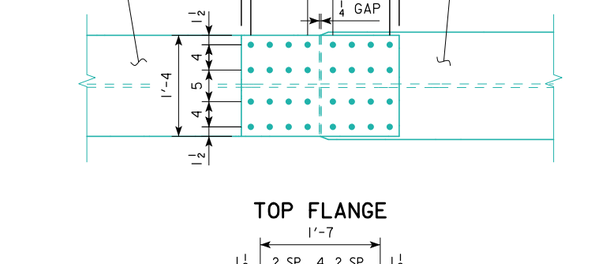

BOTTOM FLANGE
SPLICE NO. 5
GIRDERS A & G

TOP FLANGE

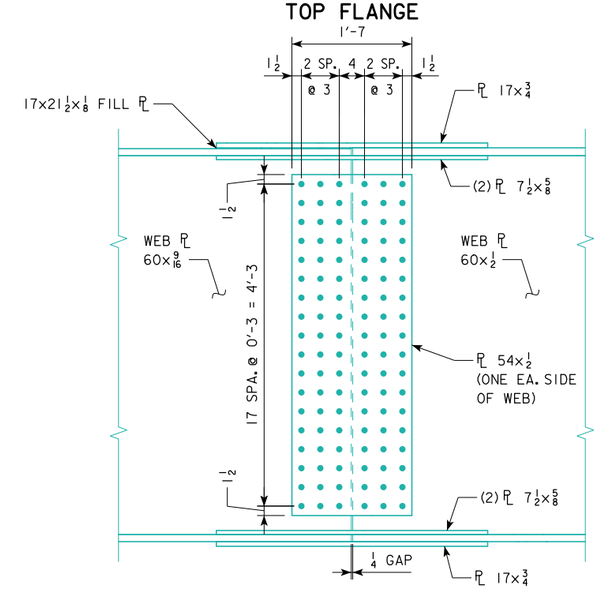

ELEVATION VIEW

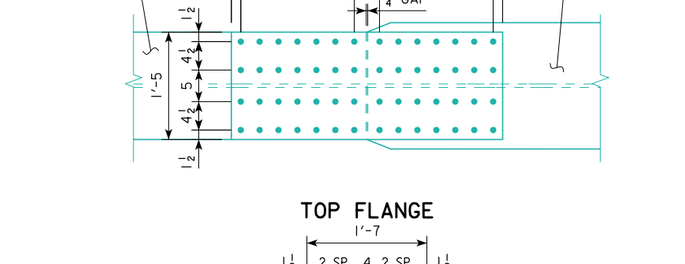

BOTTOM FLANGE
SPLICE NO. 6
GIRDERS A & G

whks
engineers + planners + land surveyors

DESIGN FOR VARIABLE SKEW (L.A.)

2271'-6 x VARI. CONTINUOUS WELDED GIRDER BRIDGE-EBL W/14' BIKE TRAIL

138'-10 & 151'-0⅞ END SPANS MULTIPLE LENGTH INTERIOR SPANS

SPLICE DETAILS GIRDERS A&G UNIT 2

STA. 6792+60.93 - 52' LEFT ℄ I-74 OCTOBER, 2015

SCOTT COUNTY

IOWA DEPARTMENT OF TRANSPORTATION - HIGHWAY DIVISION

DESIGN SHEET NO. 113 OF 282 FILE NO. 30253 DESIGN NO. 3408

DESIGN TEAM MG / BB / CF | SCOTT COUNTY | PROJECT NUMBER BRFIM-074-1(200)5--05-82 | SHEET NUMBER 114

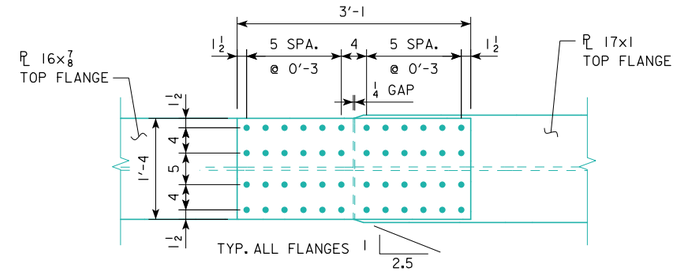

TOP FLANGE

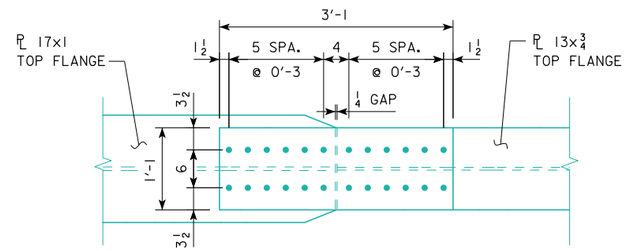

TOP FLANGE

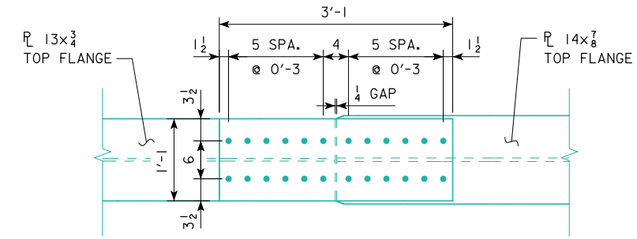

TOP FLANGE

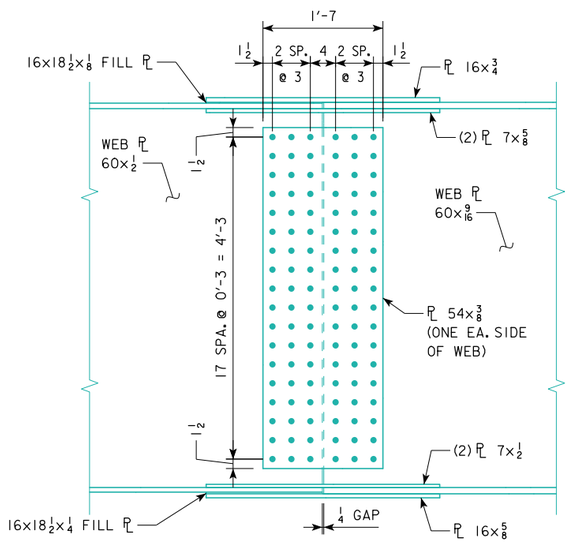

ELEVATION VIEW

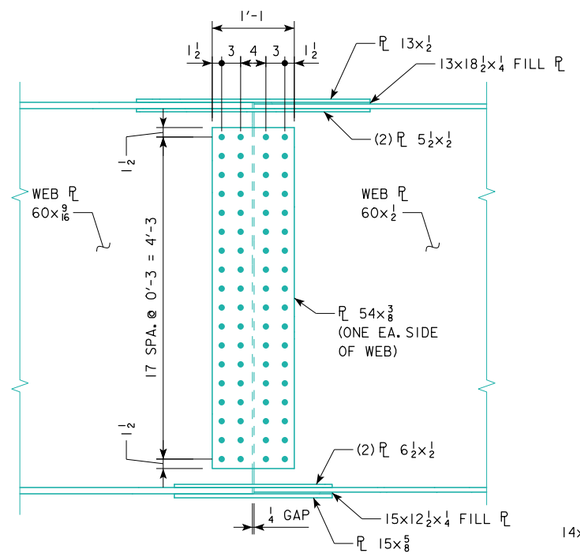

ELEVATION VIEW

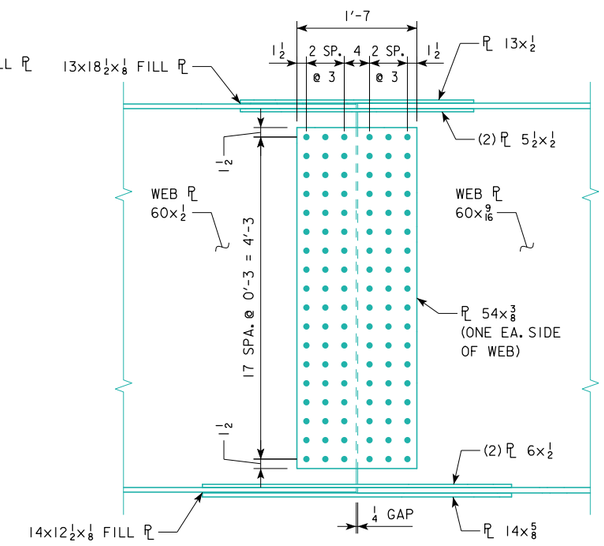

ELEVATION VIEW

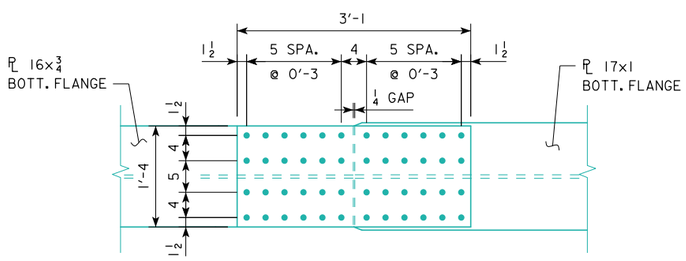

BOTTOM FLANGE
SPLICE NO. 1
GIRDERS B THRU F

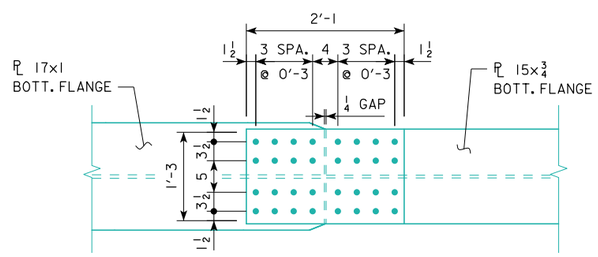

BOTTOM FLANGE
SPLICE NO. 2
GIRDERS B THRU F

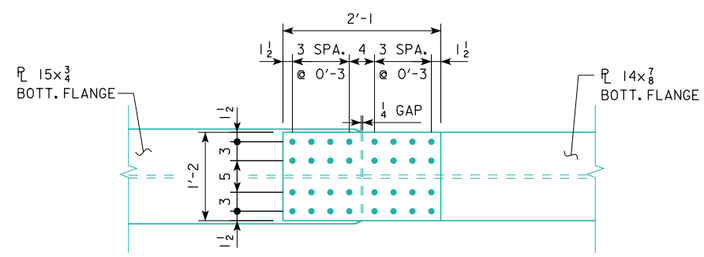

BOTTOM FLANGE
SPLICE NO. 3
GIRDERS B THRU F

whks
engineers + planners + land surveyors

DESIGN FOR VARIABLE SKEW (L.A.)

2271'-6 x VARI. CONTINUOUS WELDED GIRDER BRIDGE-EBL W/14' BIKE TRAIL

138'-10 & 151'-0 7/8 END SPANS MULTIPLE LENGTH INTERIOR SPANS

SPLICE DETAILS GIRDERS B-F UNIT 2

STA. 6792+60.93 - 52' LEFT ℄ I-74 OCTOBER, 2015

SCOTT COUNTY

IOWA DEPARTMENT OF TRANSPORTATION - HIGHWAY DIVISION

DESIGN SHEET NO. 114 OF 282 FILE NO. 30253 DESIGN NO. 3408

DESIGN TEAM MG / BB / CF	SCOTT COUNTY	PROJECT NUMBER BRFIM-074-1(200)5--05-82	SHEET NUMBER 115

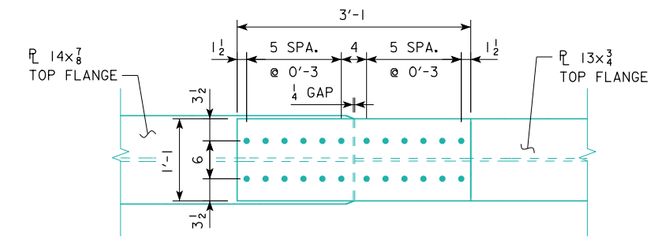

TOP FLANGE

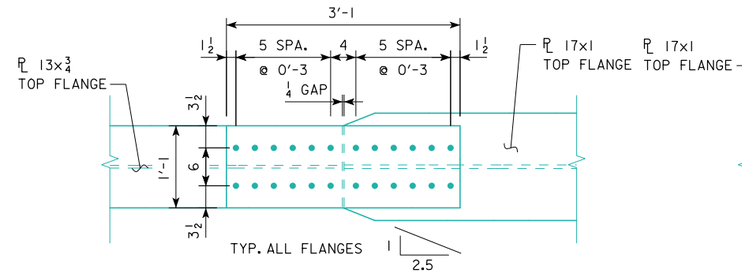

TOP FLANGE

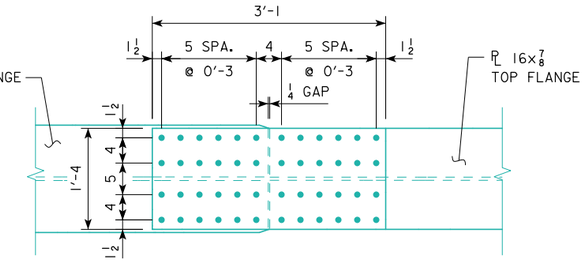

TOP FLANGE

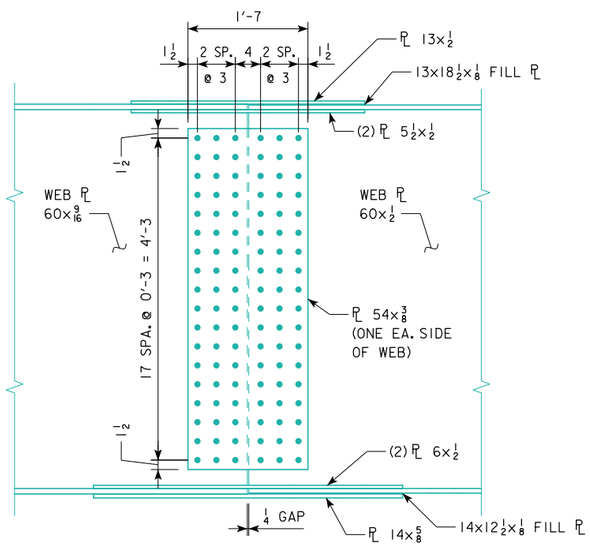

ELEVATION VIEW

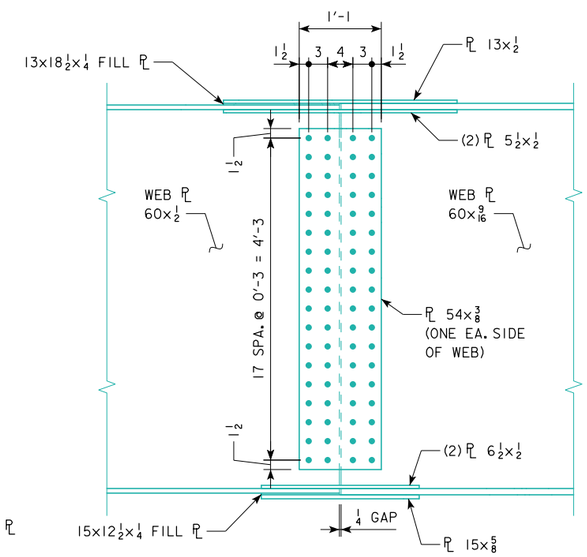

ELEVATION VIEW

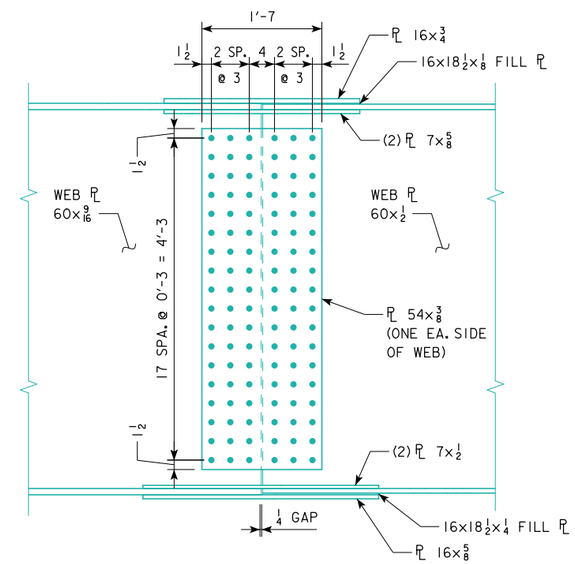

ELEVATION VIEW

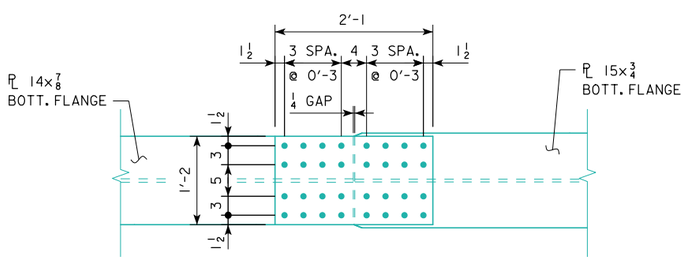

BOTTOM FLANGE

SPLICE NO. 4

GIRDERS B THRU F

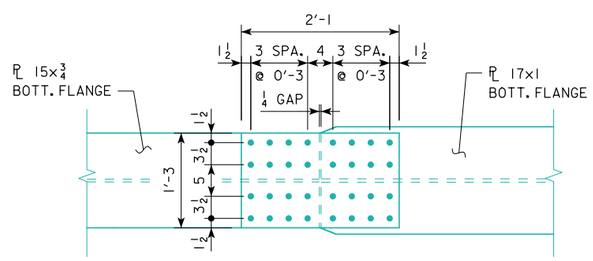

BOTTOM FLANGE

SPLICE NO. 5

GIRDERS B THRU F

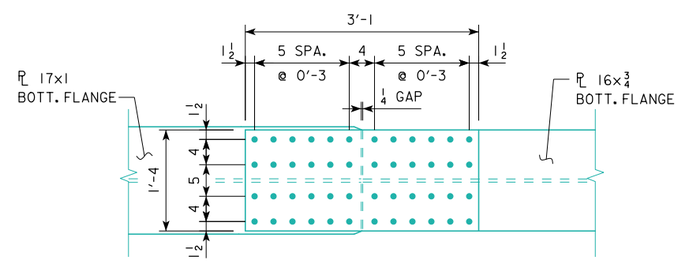

BOTTOM FLANGE

SPLICE NO. 6

GIRDERS B THRU F

whks
engineers + planners + land surveyors

DESIGN FOR VARIABLE SKEW (L.A.)

2271'-6 x VARI. CONTINUOUS WELDED GIRDER BRIDGE-EBL W/14' BIKE TRAIL

138'-10 & 151'-0 7/8 END SPANS MULTIPLE LENGTH INTERIOR SPANS

SPLICE DETAILS GIRDERS B-F UNIT 2

STA. 6792+60.93 - 52' LEFT ℄ I-74 OCTOBER, 2015

SCOTT COUNTY

IOWA DEPARTMENT OF TRANSPORTATION - HIGHWAY DIVISION

DESIGN SHEET NO. 115 OF 282 FILE NO. 30253 DESIGN NO. 3408

DESIGN TEAM MG / BB / CF | SCOTT COUNTY | PROJECT NUMBER BRFIM-074-1(200)5--05-82 | SHEET NUMBER 116

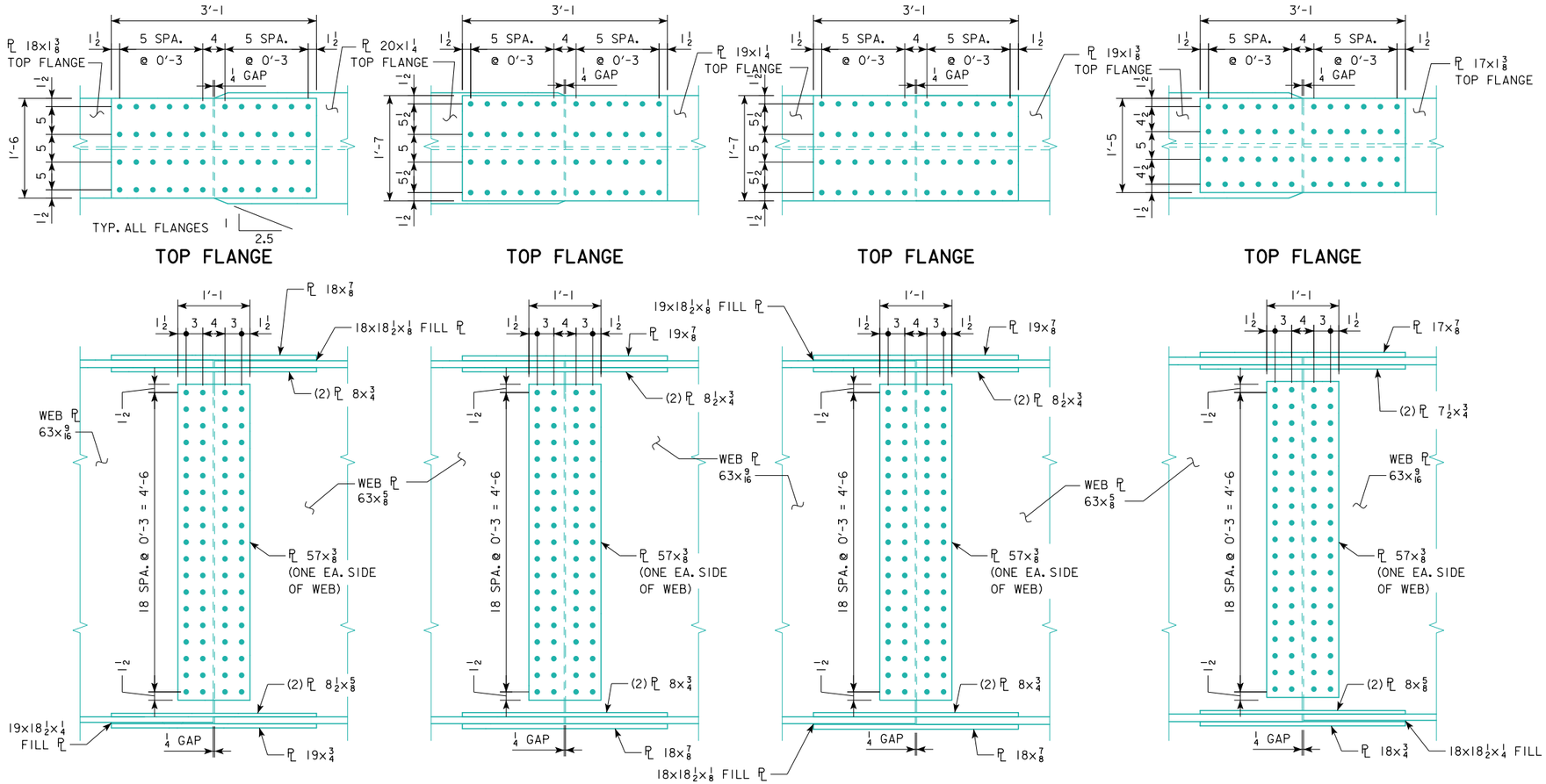

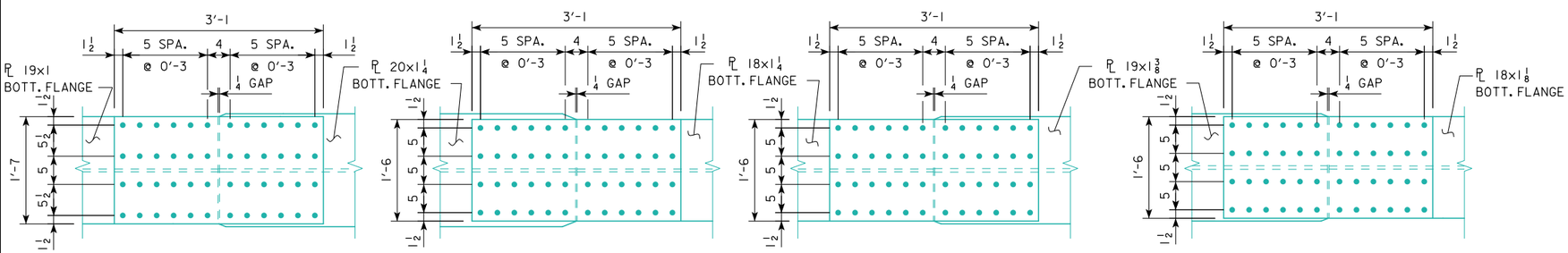

BOTTOM FLANGE
SPLICE NO. 1
GIRDERS A & G

BOTTOM FLANGE
SPLICE NO. 2
GIRDERS A & G

BOTTOM FLANGE
SPLICE NO. 3
GIRDERS A & G

BOTTOM FLANGE
SPLICE NO. 4
GIRDERS A & G

whks
engineers + planners + land surveyors

DESIGN FOR VARIABLE SKEW (L.A.)

2271'-6 x VARI. CONTINUOUS WELDED GIRDER BRIDGE-EBL W/14' BIKE TRAIL

138'-10 & 151'-0 7/8 END SPANS MULTIPLE LENGTH INTERIOR SPANS

SPLICE DETAILS GIRDERS A&G UNIT 3

STA. 6792+60.93 - 52' LEFT ℄ I-74 OCTOBER, 2015

SCOTT COUNTY

IOWA DEPARTMENT OF TRANSPORTATION - HIGHWAY DIVISION

DESIGN SHEET NO. 116 OF 282 FILE NO. 30253 DESIGN NO. 3408

DESIGN TEAM MG / BB / CF | SCOTT COUNTY | PROJECT NUMBER BRFIM-074-1(200)5--05-82 | SHEET NUMBER 117

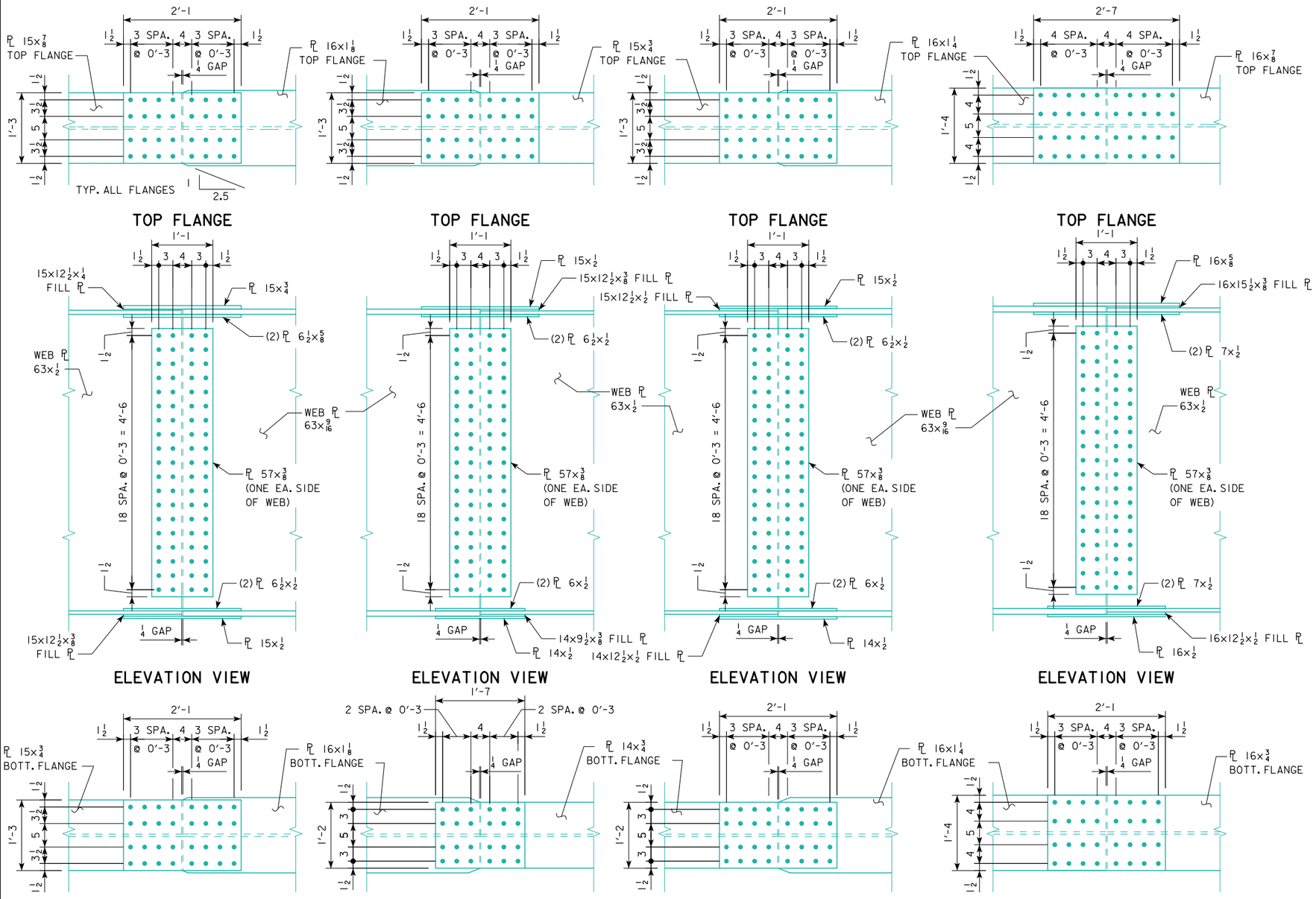

DESIGN FOR VARIABLE SKEW (L.A.)

2271'-6 x VARI. CONTINUOUS WELDED GIRDER BRIDGE-EBL W/14' BIKE TRAIL

138'-10 & 151'-0 7/8 END SPANS MULTIPLE LENGTH INTERIOR SPANS

SPLICE DETAILS GIRDERS B-F UNIT 3

STA. 6792+60.93 - 52' LEFT ℄ I-74 OCTOBER, 2015

SCOTT COUNTY

IOWA DEPARTMENT OF TRANSPORTATION - HIGHWAY DIVISION

DESIGN SHEET NO. 117 OF 282 FILE NO. 30253 DESIGN NO. 3408

whks engineers + planners + land surveyors

DESIGN TEAM MG / BB / CF	SCOTT COUNTY	PROJECT NUMBER BRFIM-074-1(200)5--05-82	SHEET NUMBER 118

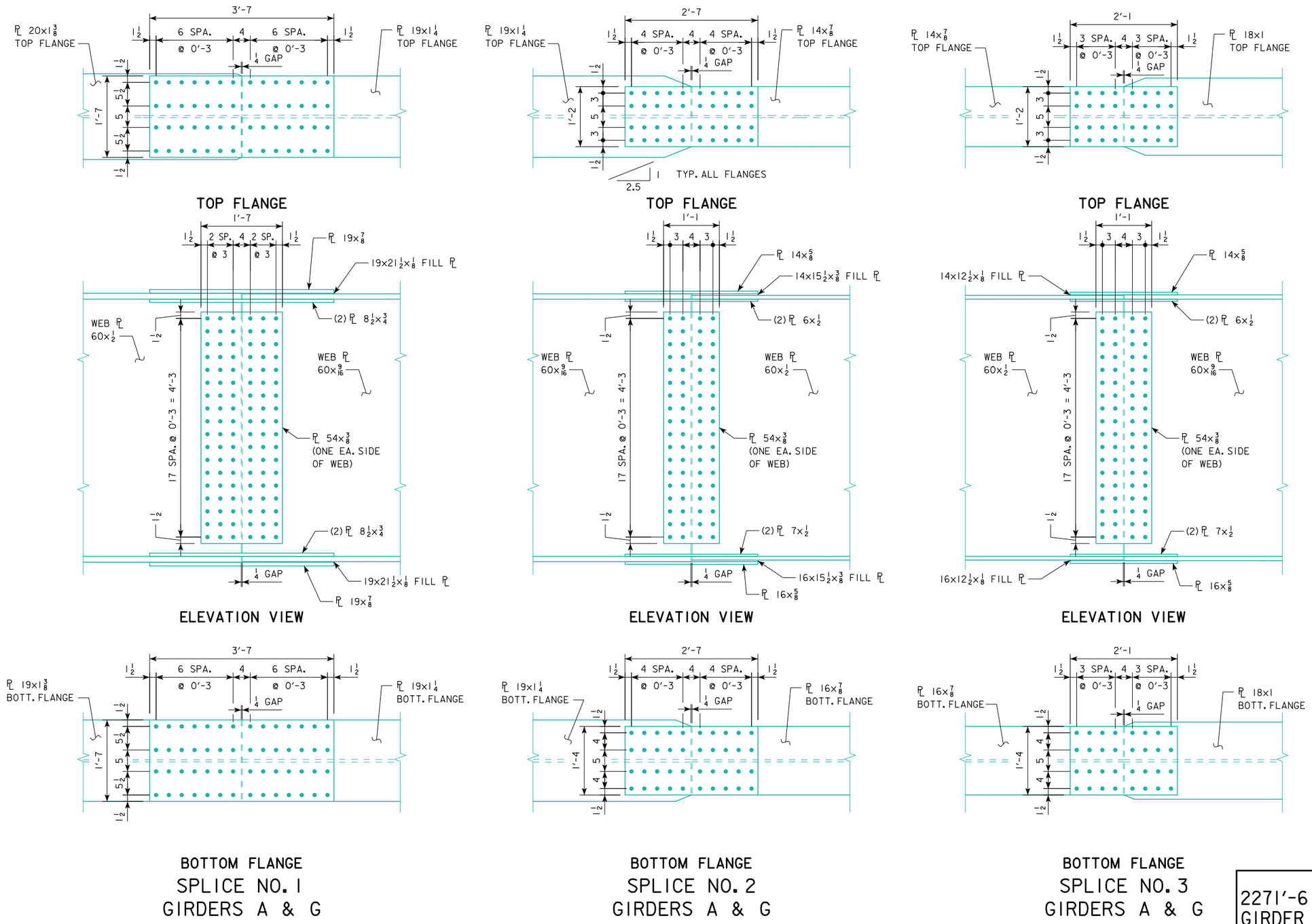

BOTTOM FLANGE
SPLICE NO. 1
GIRDERS A & G

BOTTOM FLANGE
SPLICE NO. 2
GIRDERS A & G

BOTTOM FLANGE
SPLICE NO. 3
GIRDERS A & G

whks
engineers + planners + land surveyors

DESIGN FOR VARIABLE SKEW (L.A.)

2271'-6 x VARI. CONTINUOUS WELDED GIRDER BRIDGE-EBL W/14' BIKE TRAIL

138'-10 & 151'-0 7/8 END SPANS MULTIPLE LENGTH INTERIOR SPANS

SPLICE DETAILS GIRDERS A&G UNIT 4

STA. 6792+60.93 - 52' LEFT ℄ I-74 OCTOBER, 2015

SCOTT COUNTY

IOWA DEPARTMENT OF TRANSPORTATION - HIGHWAY DIVISION

DESIGN SHEET NO. 118 OF 282 FILE NO. 30253 DESIGN NO. 3408

DESIGN TEAM CF / BB / MG | SCOTT COUNTY | PROJECT NUMBER BRFIM-074-1(200)5--05-82 | SHEET NUMBER 119

1:59:26 PM untitled c:\pwise_work\do_not_delete\dms05641\82074200.brg 4/16/2016 $MODEL

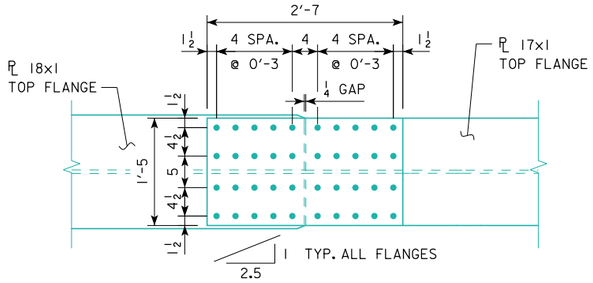

TOP FLANGE

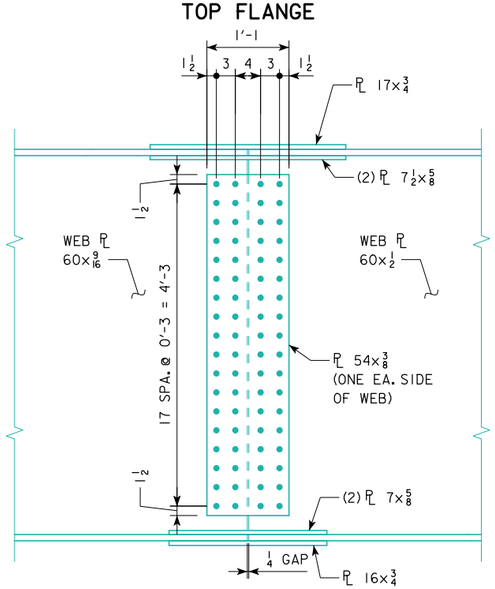

ELEVATION VIEW

BOTTOM FLANGE

SPLICE NO. 4

GIRDERS A & G

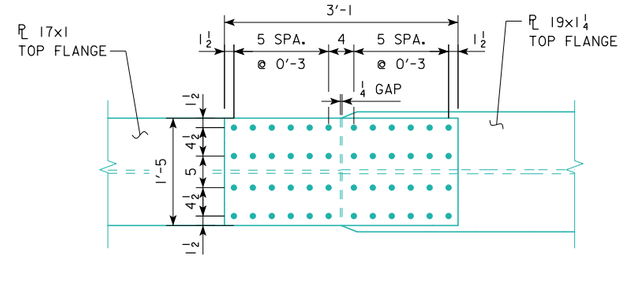

TOP FLANGE

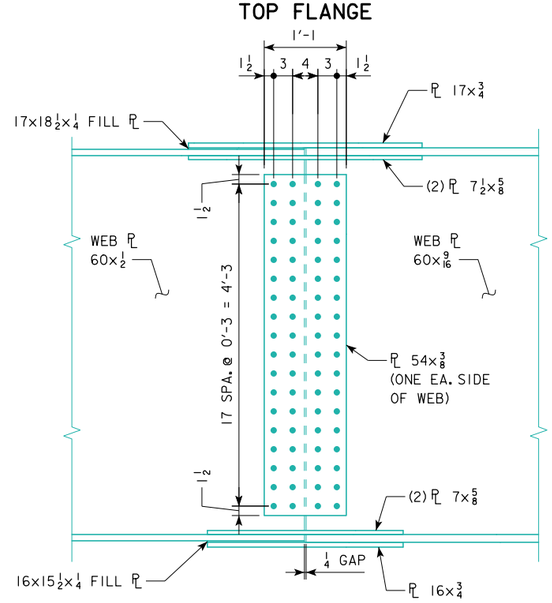

ELEVATION VIEW

BOTTOM FLANGE

SPLICE NO. 5

GIRDERS A & G

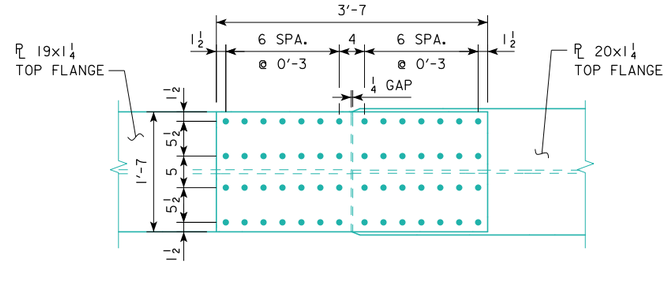

TOP FLANGE

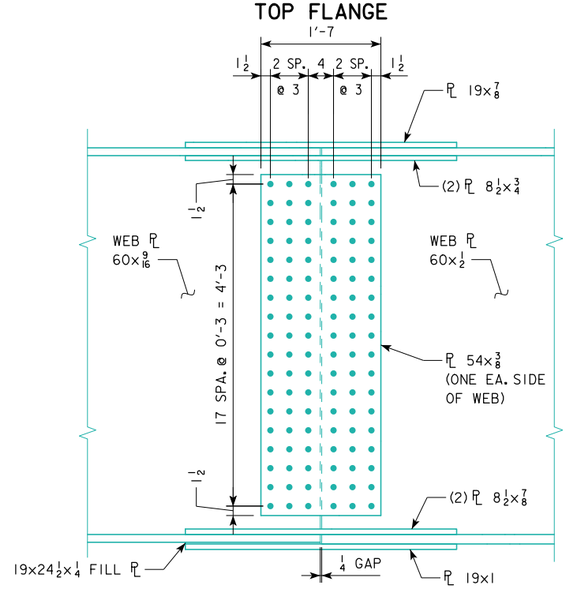

ELEVATION VIEW

BOTTOM FLANGE

SPLICE NO. 6

GIRDERS A & G

DESIGN FOR VARIABLE SKEW (L.A.)

2271'-6 x VARI. CONTINUOUS WELDED GIRDER BRIDGE-EBL W/14' BIKE TRAIL

138'-10 & 151'-0⅞ END SPANS MULTIPLE LENGTH INTERIOR SPANS

SPLICE DETAILS GIRDERS A&G UNIT 4

STA. 6792+60.93 - 52' LEFT ℄ I-74 OCTOBER, 2015

SCOTT COUNTY

IOWA DEPARTMENT OF TRANSPORTATION - HIGHWAY DIVISION

DESIGN SHEET NO. 119 OF 282 FILE NO. 30253 DESIGN NO. 3408

whks engineers + planners + land surveyors

DESIGN TEAM CF / BB / MG | SCOTT COUNTY | PROJECT NUMBER BRFIM-074-1(200)5--05-82 | SHEET NUMBER 120

1:59:34 PM untitled c:\pwise_work\do_not_delete\dms05641\82074200.brg 4/16/2016 $MODEL

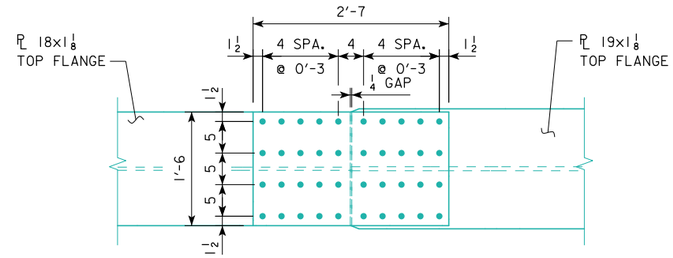

TOP FLANGE

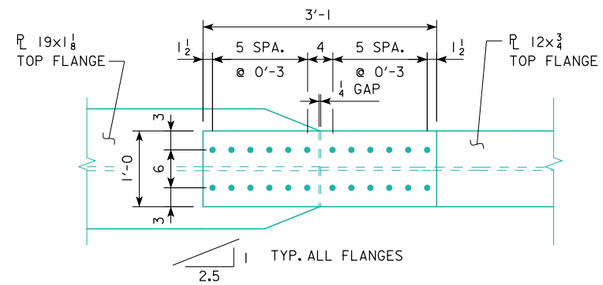

TOP FLANGE

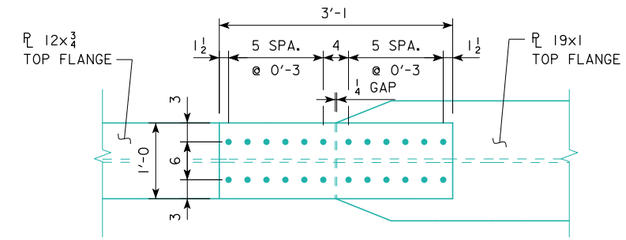

TOP FLANGE

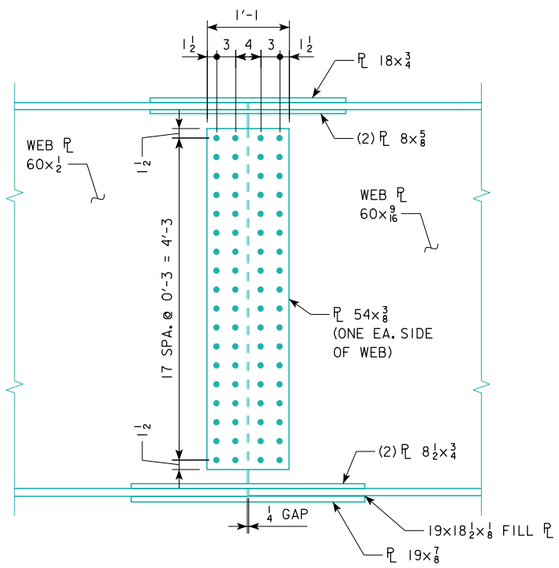

ELEVATION VIEW

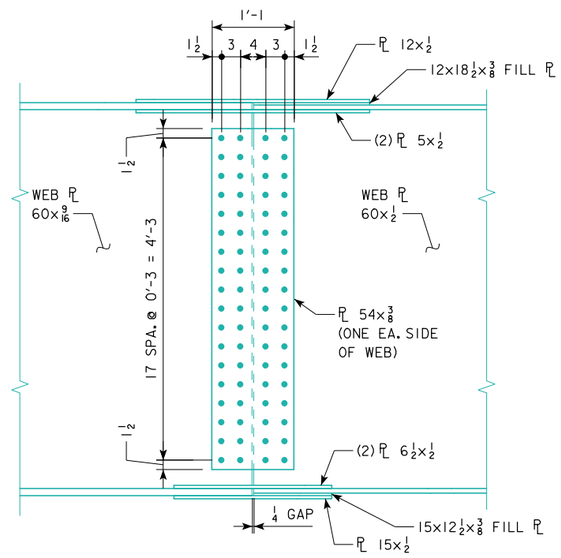

ELEVATION VIEW

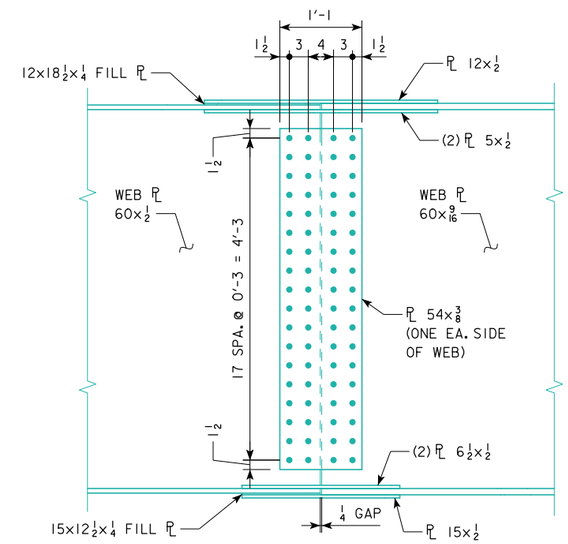

ELEVATION VIEW

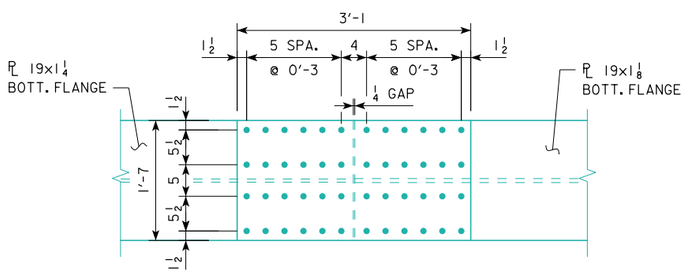

BOTTOM FLANGE

SPLICE NO. 1

GIRDERS B THRU F

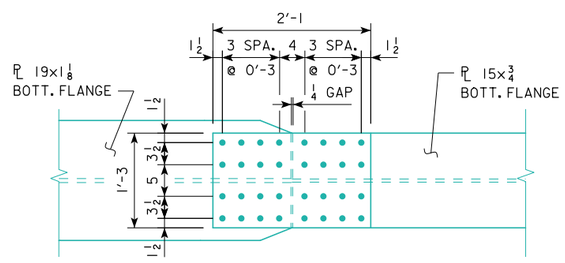

BOTTOM FLANGE

SPLICE NO. 2

GIRDERS B THRU F

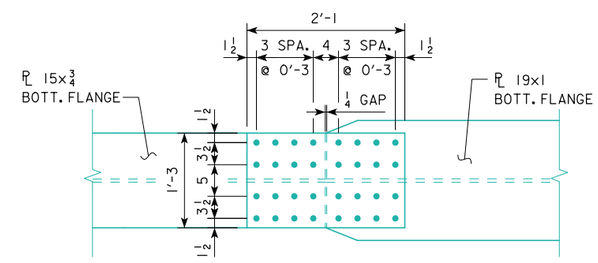

BOTTOM FLANGE

SPLICE NO. 3

GIRDERS B THRU F

whks
engineers + planners + land surveyors

DESIGN FOR VARIABLE SKEW (L.A.)

2271'-6 x VARI. CONTINUOUS WELDED GIRDER BRIDGE-EBL W/14' BIKE TRAIL

138'-10 & 151'-0 7/8 END SPANS MULTIPLE LENGTH INTERIOR SPANS

SPLICE DETAILS GIRDERS B-F UNIT 4

STA. 6792+60.93 - 52' LEFT ℄ I-74 OCTOBER, 2015

SCOTT COUNTY

IOWA DEPARTMENT OF TRANSPORTATION - HIGHWAY DIVISION

DESIGN SHEET NO. 120 OF 282 FILE NO. 30253 DESIGN NO. 3408

DESIGN TEAM CF / BB / MG | SCOTT COUNTY | PROJECT NUMBER BRFIM-074-1(200)5--05-82 | SHEET NUMBER 121

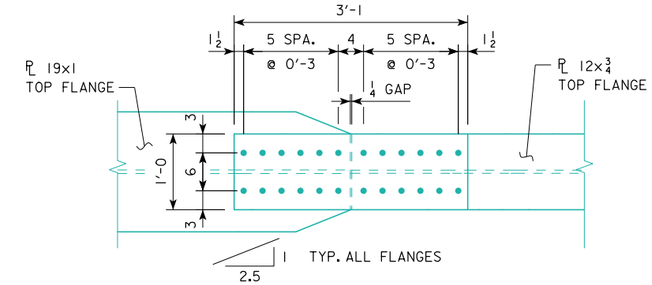

TOP FLANGE

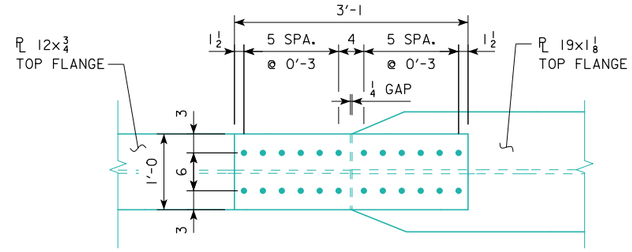

TOP FLANGE

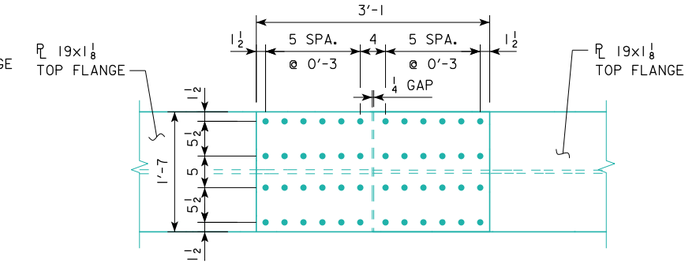

TOP FLANGE

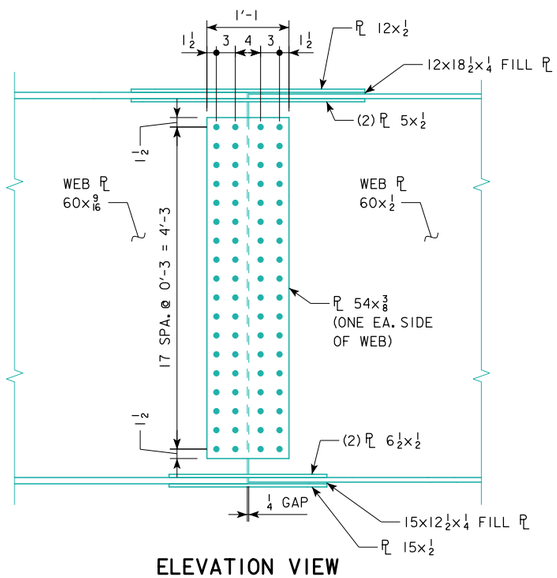

ELEVATION VIEW

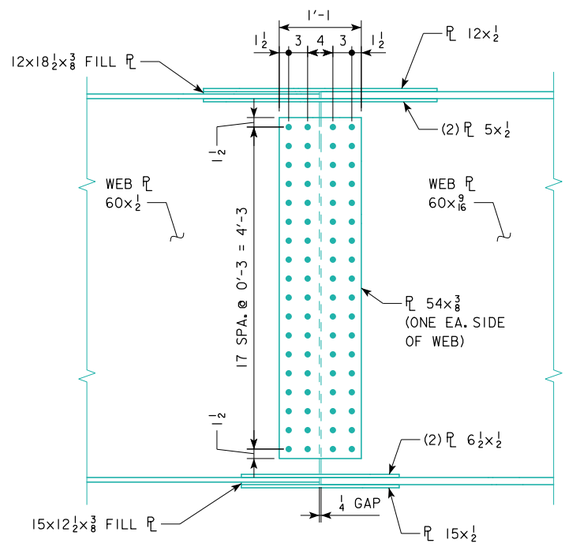

ELEVATION VIEW

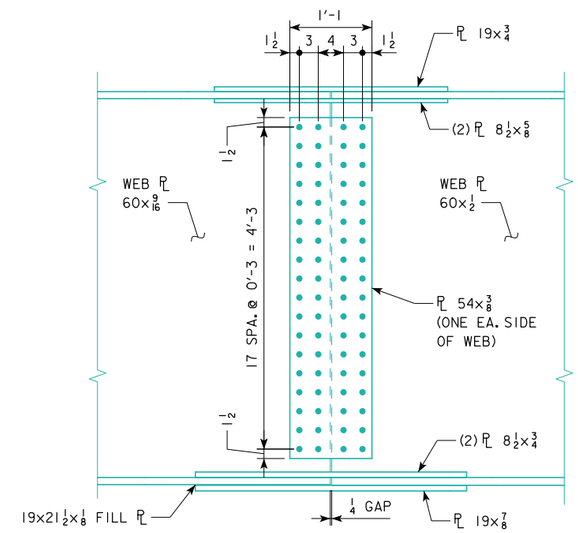

ELEVATION VIEW

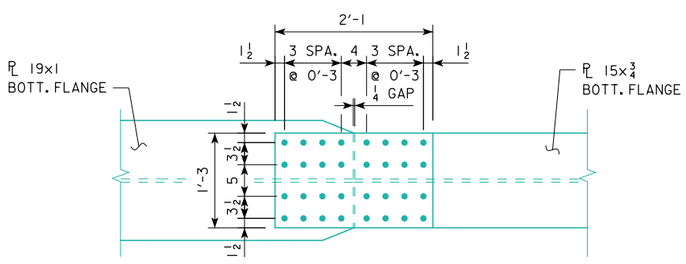

BOTTOM FLANGE
SPLICE NO. 4
GIRDERS B THRU F

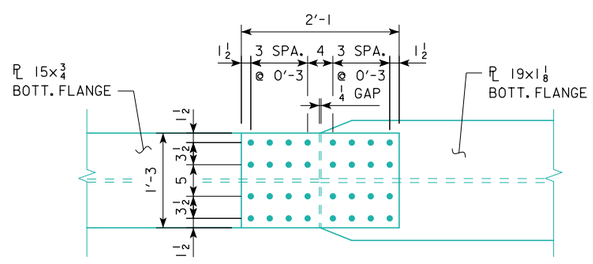

BOTTOM FLANGE
SPLICE NO. 5
GIRDERS B THRU F

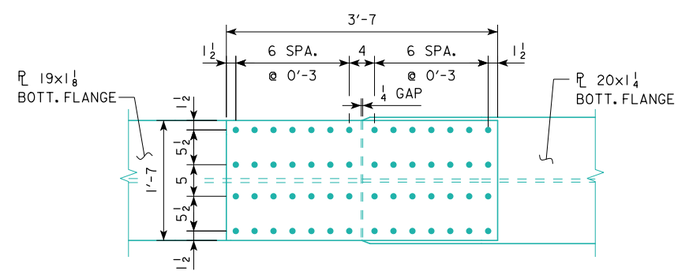

BOTTOM FLANGE
SPLICE NO. 6
GIRDERS B THRU F

DESIGN FOR VARIABLE SKEW (L.A.)

2271'-6 x VARI. CONTINUOUS WELDED GIRDER BRIDGE-EBL W/14' BIKE TRAIL

138'-10 & 151'-0 7/8 END SPANS MULTIPLE LENGTH INTERIOR SPANS

SPLICE DETAILS GIRDERS B-F UNIT 4

STA. 6792+60.93 - 52' LEFT ℄ I-74 OCTOBER, 2015

SCOTT COUNTY

IOWA DEPARTMENT OF TRANSPORTATION - HIGHWAY DIVISION

DESIGN SHEET NO. 121 OF 282 FILE NO. 30253 DESIGN NO. 3408

whks
engineers + planners + land surveyors

DESIGN TEAM CF / BB / MG	SCOTT COUNTY	PROJECT NUMBER BRFIM-074-1(200)5--05-82	SHEET NUMBER 122

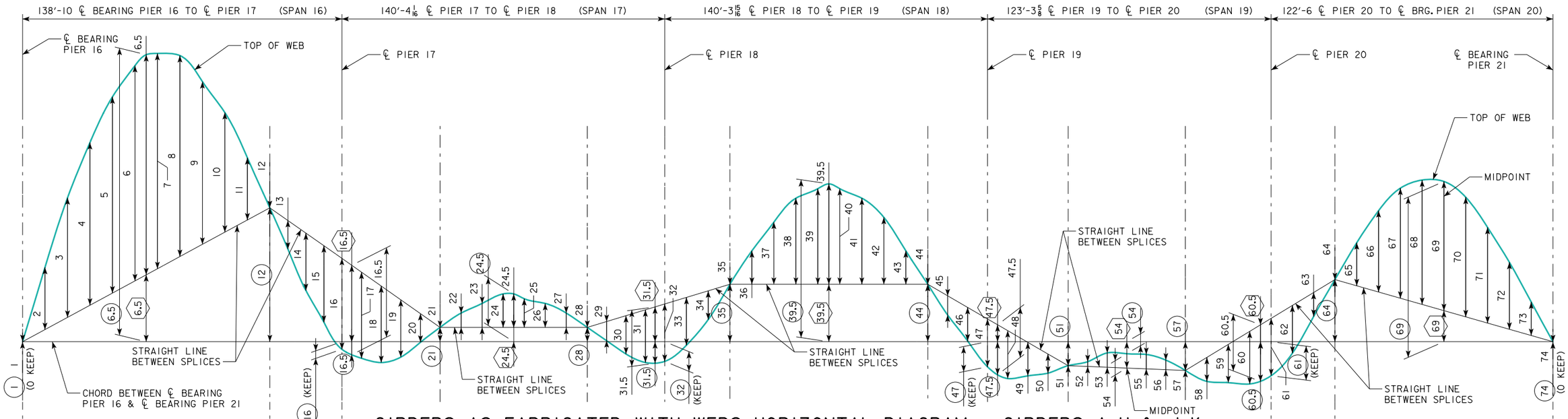

GIRDERS AS FABRICATED WITH WEBS HORIZONTAL DIAGRAM - GIRDERS A-H & J-K

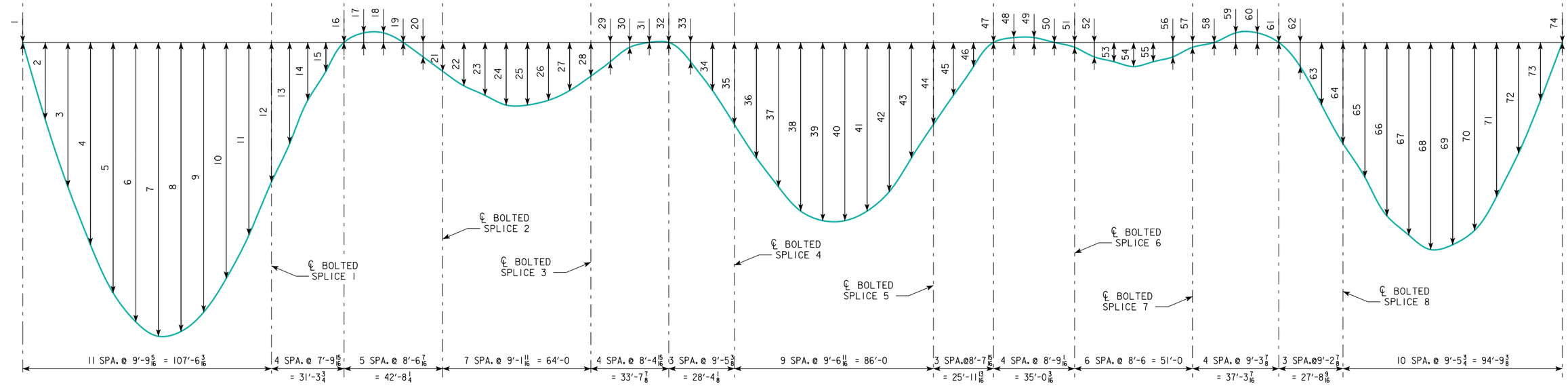

DEAD LOAD DEFLECTION DIAGRAM - GIRDERS A-H & J-K

NOTES:
LINE NUMBERS CORRESPOND TO THE HEXAGONAL NUMBERS SHOWN ON THE SLAB ELEVATION SHEET.

NUMBERS ENDING IN ".5" CORRESPOND TO THE MIDPOINT OF THE WEB SPLICE SECTION, NOT NECESSARILY THE MIDPOINT OF ADJACENT LINES.

WORK THIS SHEET WITH THE "SLAB ELEVATION PLAN" ON DES. SHTS. 192-193 AND THE "GIRDER FABRICATION TABLE" ON DES. SHT. 127-129 AND THE "DEAD LOAD DEFLECTION TABLE" ON DES. SHT. 130-132.

whks
engineers + planners + land surveyors

DESIGN FOR VARIABLE SKEW (L.A.)

2271'-6 x VARI. CONTINUOUS WELDED GIRDER BRIDGE-EBL W/14' BIKE TRAIL

138'-10 & 151'-0 7/8 END SPANS MULTIPLE LENGTH INTERIOR SPANS

FABRIC. & DEFL. DIAGRAMS - UNIT 1

STA. 6792+60.93 - 52' LEFT ℄ I-74 OCTOBER, 2015

SCOTT COUNTY

IOWA DEPARTMENT OF TRANSPORTATION - HIGHWAY DIVISION

DESIGN SHEET NO. 122 OF 282 FILE NO. 30253 DESIGN NO. 3408

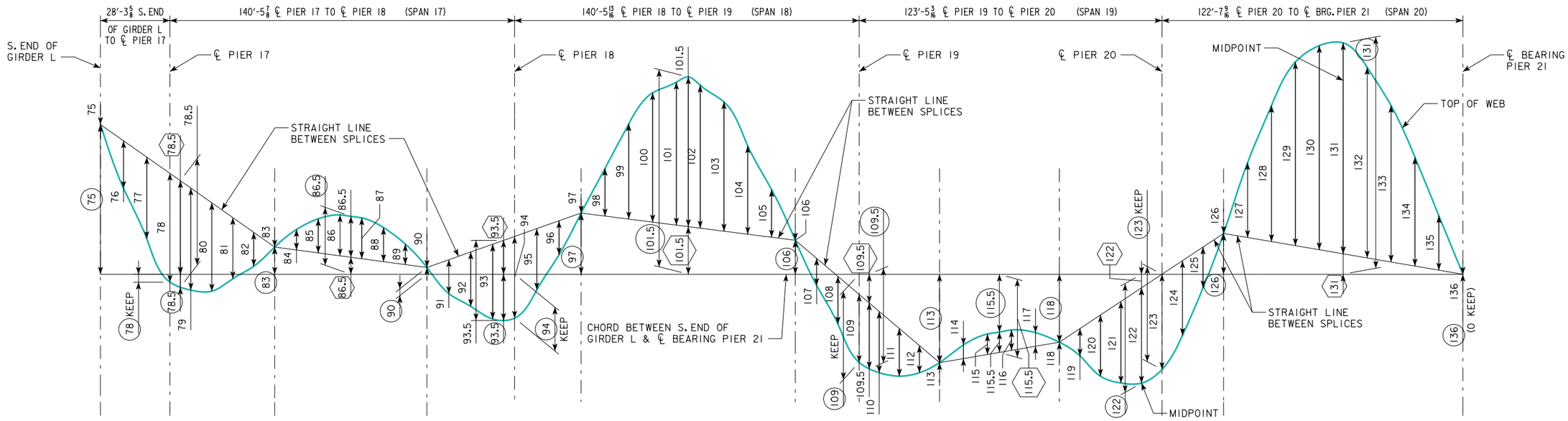

GIRDERS AS FABRICATED WITH WEBS HORIZONTAL DIAGRAM - GIRDER L

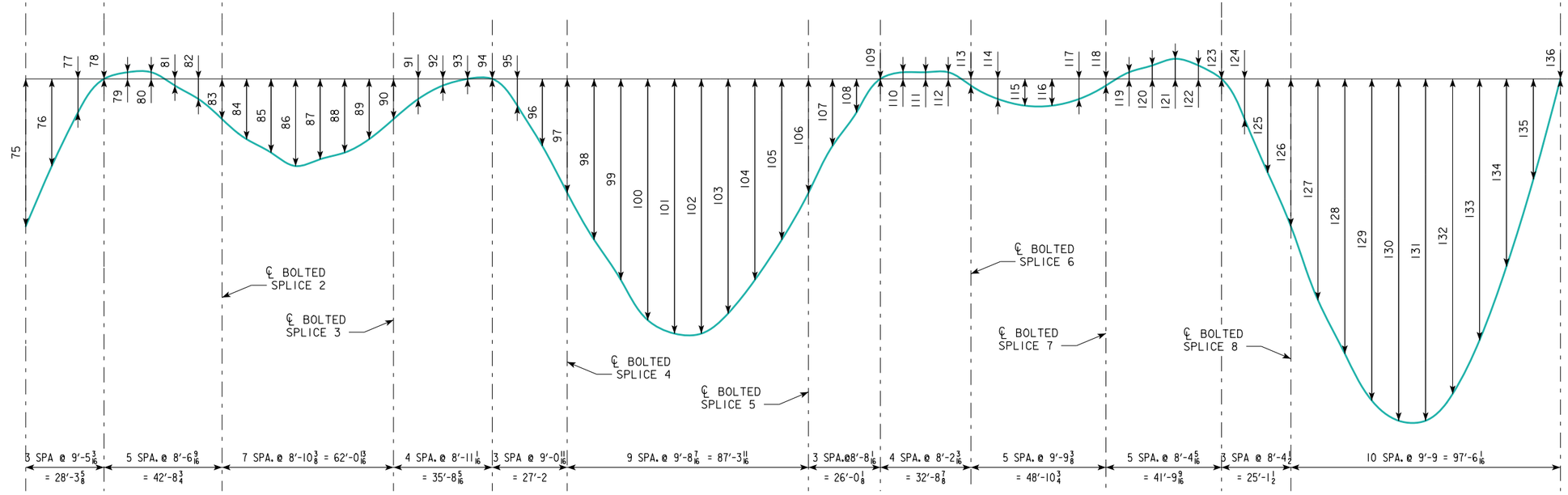

DEAD LOAD DEFLECTION DIAGRAM - GIRDER L

NOTES:
LINE NUMBERS CORRESPOND TO THE HEXAGONAL NUMBERS SHOWN ON THE SLAB ELEVATION SHEET.

NUMBERS ENDING IN ".5" CORRESPOND TO THE MIDPOINT OF THE WEB SPLICE SECTION, NOT NECESSARILY THE MIDPOINT OF ADJACENT LINES.

WORK THIS SHEET WITH THE "SLAB ELEVATION PLAN" ON DES. SHTS. 192 & 193 AND THE "GIRDER FABRICATION TABLE" ON DES. SHT. 127-129 AND THE "DEAD LOAD DEFLECTION TABLE" ON DES. SHT. 130-132.

whks
engineers + planners + land surveyors

DESIGN FOR VARIABLE SKEW (L.A.)

2271'-6 x VARI. CONTINUOUS WELDED GIRDER BRIDGE-EBL W/14' BIKE TRAIL

138'-10 & 151'-0 7/8 END SPANS MULTIPLE LENGTH INTERIOR SPANS

FABRIC. & DEFL. DIAGRAMS - UNIT 1

STA. 6792+60.93 - 52' LEFT ℄ I-74 OCTOBER, 2015

SCOTT COUNTY

IOWA DEPARTMENT OF TRANSPORTATION - HIGHWAY DIVISION

DESIGN SHEET NO. 123 OF 282 FILE NO. 30253 DESIGN NO. 3408

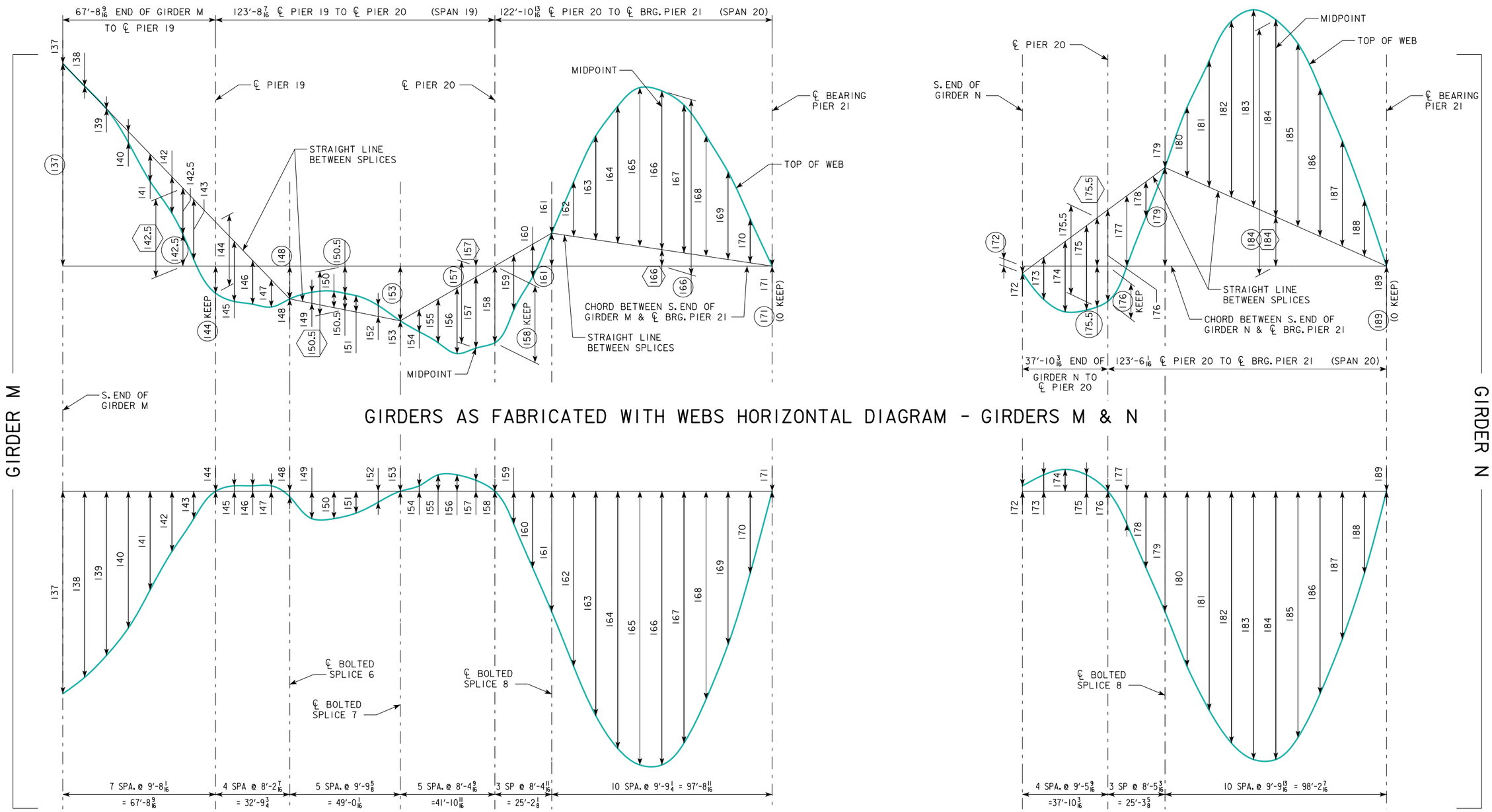

NOTES:
LINE NUMBERS CORRESPOND TO THE HEXAGONAL NUMBERS SHOWN ON THE SLAB ELEVATION SHEET.

NUMBERS ENDING IN ".5" CORRESPOND TO THE MIDPOINT OF THE WEB SPLICE SECTION, NOT NECESSARILY THE MIDPOINT OF ADJACENT LINES.

WORK THIS SHEET WITH THE "SLAB ELEVATION PLAN" ON DES. SHTS. 192 & 193 AND THE "GIRDER FABRICATION TABLE" ON DES. SHT. 127-129 AND THE "DEAD LOAD DEFLECTION TABLE" ON DES. SHT. 130-132.

whks
engineers + planners + land surveyors

DESIGN FOR VARIABLE SKEW (L.A.)

2271'-6 x VARI. CONTINUOUS WELDED GIRDER BRIDGE-EBL W/14' BIKE TRAIL

138'-10 & 151'-0 7/8 END SPANS MULTIPLE LENGTH INTERIOR SPANS

FABRIC. & DEFL. DIAGRAMS - UNIT 1

STA. 6792+60.93 - 52' LEFT ℄ I-74 OCTOBER, 2015

SCOTT COUNTY

IOWA DEPARTMENT OF TRANSPORTATION - HIGHWAY DIVISION

DESIGN SHEET NO. 124 OF 282 FILE NO. 30253 DESIGN NO. 3408

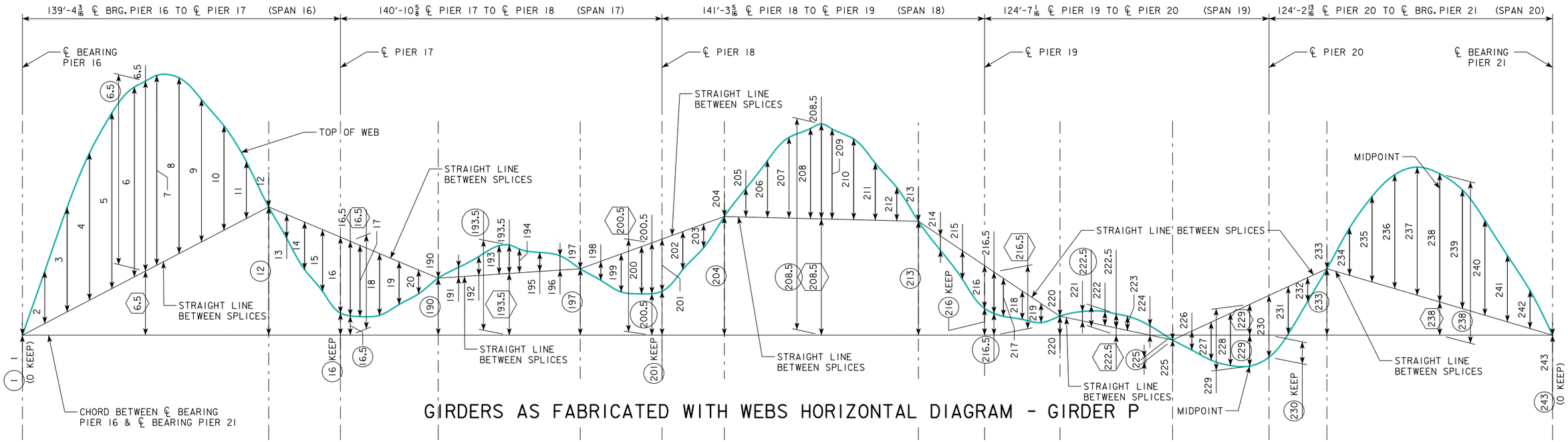

GIRDERS AS FABRICATED WITH WEBS HORIZONTAL DIAGRAM - GIRDER P

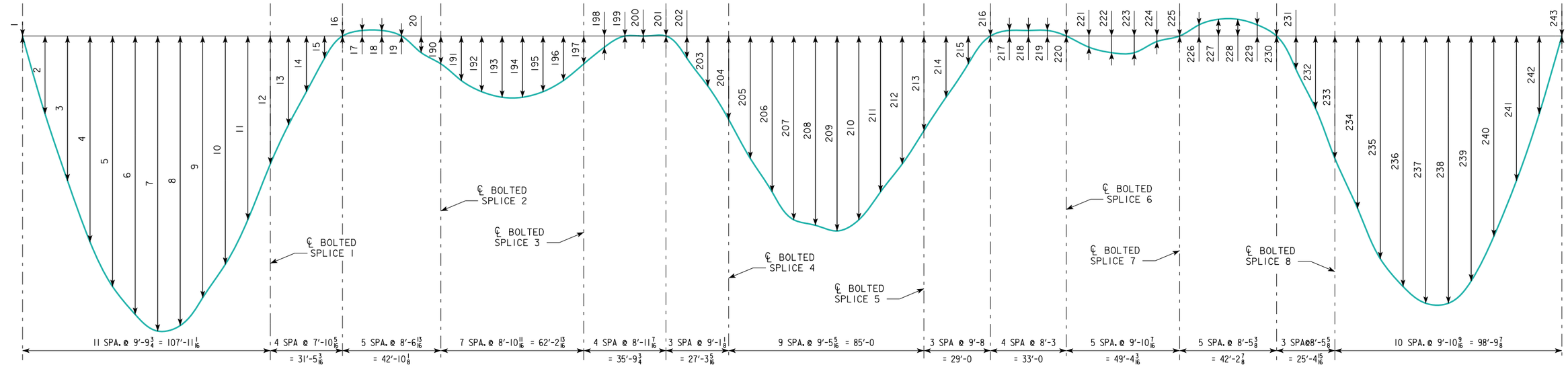

DEAD LOAD DEFLECTION DIAGRAM - GIRDER P

NOTES:
LINE NUMBERS CORRESPOND TO THE HEXAGONAL NUMBERS SHOWN ON THE SLAB ELEVATION SHEET.

NUMBERS ENDING IN ".5" CORRESPOND TO THE MIDPOINT OF THE WEB SPLICE SECTION, NOT NECESSARILY THE MIDPOINT OF ADJACENT LINES.

WORK THIS SHEET WITH THE "SLAB ELEVATION PLAN" ON DES. SHTS. 192 & 193 AND THE "GIRDER FABRICATION TABLE" ON DES. SHT. 127-129 AND THE "DEAD LOAD DEFLECTION TABLE" ON DES. SHT. 130-132.

whks
engineers + planners + land surveyors

DESIGN FOR VARIABLE SKEW (L.A.)

2271'-6 x VARI. CONTINUOUS WELDED GIRDER BRIDGE-EBL W/14' BIKE TRAIL

138'-10 & 151'-0 7/8 END SPANS MULTIPLE LENGTH INTERIOR SPANS

FABRIC. & DEFL. DIAGRAMS - UNIT 1

STA. 6792+60.93 - 52' LEFT ℄ I-74 OCTOBER, 2015

SCOTT COUNTY

IOWA DEPARTMENT OF TRANSPORTATION - HIGHWAY DIVISION

DESIGN SHEET NO. 125 OF 282 FILE NO. 30253 DESIGN NO. 3408

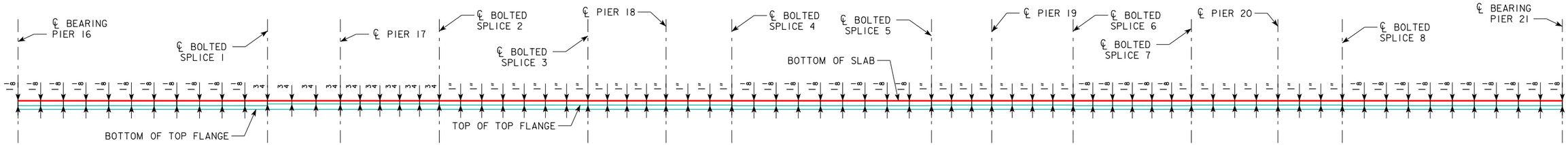

THEORETICAL CONCRETE HAUNCH DIAGRAM - GIRDER A

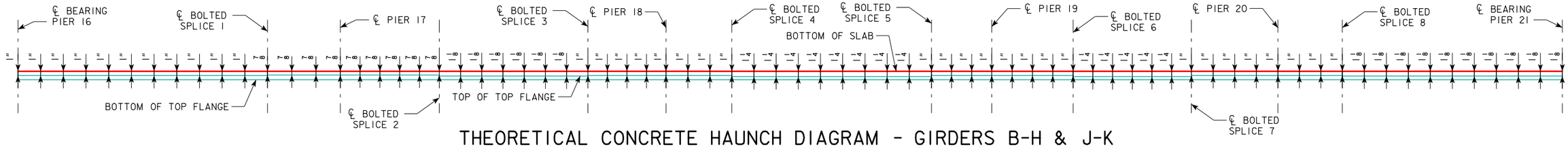

THEORETICAL CONCRETE HAUNCH DIAGRAM - GIRDERS B-H & J-K

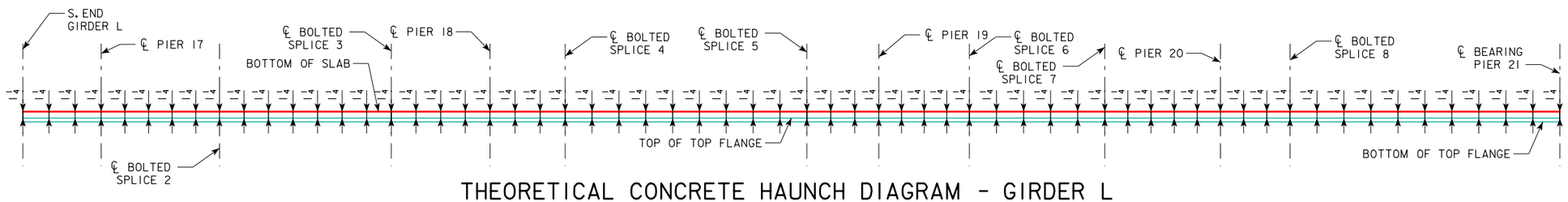

THEORETICAL CONCRETE HAUNCH DIAGRAM - GIRDER L

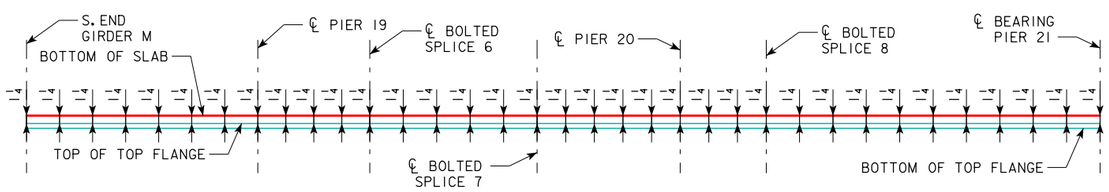

THEORETICAL CONCRETE HAUNCH DIAGRAM - GIRDER M

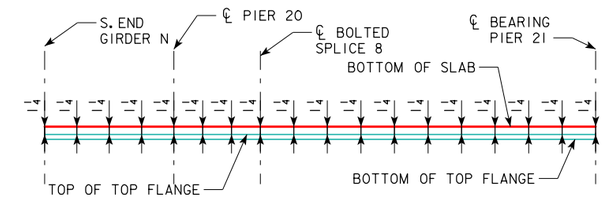

THEORETICAL CONCRETE HAUNCH DIAGRAM - GIRDER N

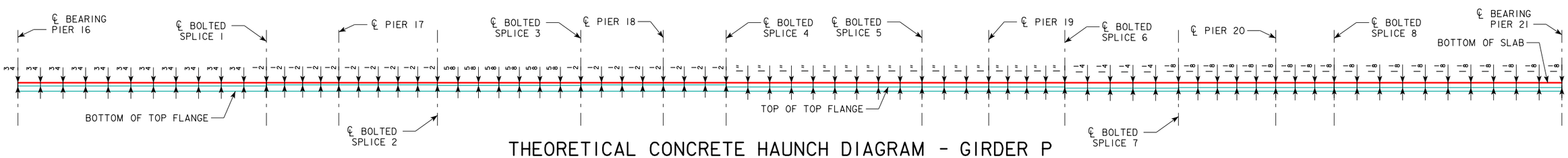

THEORETICAL CONCRETE HAUNCH DIAGRAM - GIRDER P

NOTE:

SEE DESIGN SHEETS 122-125 FOR DIMENSIONS BETWEEN PIERS AND SPLICES.

whks
engineers + planners + land surveyors

DESIGN FOR VARIABLE SKEW (L.A.)

2271'-6 x VARI. CONTINUOUS WELDED GIRDER BRIDGE-EBL W/14' BIKE TRAIL

138'-10 & 151'-0 7/8 END SPANS MULTIPLE LENGTH INTERIOR SPANS

HAUNCH DIAGRAMS-UNIT 1

STA. 6792+60.93 - 52' LEFT ℄ I-74 OCTOBER, 2015

SCOTT COUNTY

IOWA DEPARTMENT OF TRANSPORTATION - HIGHWAY DIVISION

DESIGN SHEET NO. 126 OF 282 FILE NO. 30253 DESIGN NO. 3408

GIRDERS AS FABRICATED WITH WEBS HORIZONTAL

BEAM	℄ BRG. PIER 16															℄ BOLTED SPLICE 1					℄ PIER 17									℄ BOLTED SPLICE 2						
LINE	1	1	LINE 2	LINE 3	LINE 4	LINE 5	LINE 6	6.5	6.5	6.5	LINE 7	LINE 8	LINE 9	LINE 10	LINE 11	12	12	LINE 13	LINE 14	LINE 15	16	16	16.5	16.5	16.5	LINE 17	LINE 18	LINE 19	LINE 20	190	190	LINE 191	LINE 192	LINE 193	193.5	193.5	193.5
P	0	0	5/8	1 1/4	1 3/4	2 1/16	2 1/4	2 1/4	3 1/16	3/4	2 1/4	2 1/16	1 11/16	1 1/4	11/16	0	1 9/16	-5/16	-9/16	-3/4	-7/8	5/16	-7/8	1/4	1 1/8	-13/16	-11/16	-1/2	-1/4	0	11/16	1/8	1/4	5/16	5/16	1	3/4

																S. END GIRDER L					℄ PIER 17									℄ BOLTED SPLICE 2						
																75	75	LINE 76	LINE 77	78	78	78.5	78.5	78.5	LINE 79	LINE 80	LINE 81	LINE 82	83	83	LINE 84	LINE 85	LINE 86	86.5	86.5	86.5
L																0	1 1/4	-7/16	-11/16	-15/16	-1/16	-7/8	-1/8	3/4	-7/8	-3/4	-9/16	-1/4	0	3/16	1/8	1/4	3/8	3/8	7/16	1/8

	℄ BRG. PIER 16															℄ BOLTED SPLICE 1					℄ PIER 17									℄ BOLTED SPLICE 2						
	1	1	LINE 2	LINE 3	LINE 4	LINE 5	LINE 6	6.5	6.5	6.5	LINE 7	LINE 8	LINE 9	LINE 10	LINE 11	12	12	LINE 13	LINE 14	LINE 15	16	16	16.5	16.5	16.5	LINE 17	LINE 18	LINE 19	LINE 20	21	21	LINE 22	LINE 23	LINE 24	24.5	24.5	24.5
K	0	0	3/4	1 7/16	2 1/16	2 7/16	2 5/8	2 11/16	3 3/8	11/16	2 11/16	2 1/2	2 1/16	1 1/2	13/16	0	1 3/8	-3/8	-11/16	-15/16	-1 1/8	-3/8	-1 1/16	-7/16	5/8	-1 1/16	-7/8	-5/8	-5/16	0	-1/16	3/16	5/16	7/16	7/16	1/4	-1/8
J	0	0	7/8	1 11/16	2 3/8	2 7/8	3 1/16	3 1/8	4	7/8	3 1/16	2 7/8	2 3/8	1 11/16	15/16	0	1 3/4	-7/16	-13/16	-1 1/16	-1 5/16	-1/4	-1 1/4	-5/16	15/16	-1 1/4	-1 1/16	-3/4	-3/8	0	1/8	1/4	7/16	9/16	1/2	5/8	1/16
H	0	0	1	1 7/8	2 11/16	3 3/16	3 7/16	3 9/16	4 9/16	1 1/16	3 1/2	3 1/4	2 11/16	1 15/16	1 1/16	0	2 1/8	-7/16	-15/16	-1 1/4	-1 1/2	-3/16	-1 7/16	-5/16	1 1/8	-1 7/16	-1 1/4	-7/8	-7/16	0	3/16	1/4	7/16	5/8	9/16	3/4	1/8
G	0	0	15/16	1 13/16	2 9/16	3 1/16	3 5/16	3 3/8	4 3/8	1	3 5/16	3 1/16	2 9/16	1 13/16	1	0	2	-7/16	-13/16	-1 1/8	-1 7/16	-3/16	-1 3/8	-1/4	1 1/16	-1 5/16	-1 1/8	-13/16	-7/16	0	3/16	1/4	7/16	9/16	9/16	11/16	1/8
F	0	0	15/16	1 13/16	2 1/2	3	3 1/4	3 5/16	4 5/16	1	3 1/4	3 1/16	2 1/2	1 13/16	15/16	0	2	-7/16	-7/8	-1 1/8	-1 7/16	-3/16	-1 3/8	-1/4	1 1/16	-1 5/16	-1 1/8	-13/16	-7/16	0	3/16	1/4	7/16	9/16	9/16	3/4	3/16
E	0	0	15/16	1 3/4	2 1/2	3	3 3/16	3 1/4	4 1/4	1	3 1/4	3	2 1/2	1 3/4	15/16	0	1 15/16	-7/16	-7/8	-1 1/8	-1 3/8	-3/16	-1 5/16	-1/4	1 1/8	-1 5/16	-1 1/8	-13/16	-7/16	0	1/4	1/4	7/16	9/16	9/16	3/4	1/4
D	0	0	15/16	1 3/4	2 7/16	2 15/16	3 1/8	3 3/16	4 3/16	15/16	3 3/16	2 15/16	2 7/16	1 3/4	15/16	0	1 15/16	-7/16	-7/8	-1 1/8	-1 3/8	-3/16	-1 5/16	-1/4	1 1/8	-1 5/16	-1 1/8	-13/16	-7/16	0	1/4	1/4	7/16	9/16	9/16	13/16	1/4
C	0	0	7/8	1 11/16	2 3/8	2 13/16	3 1/16	3 1/8	4 1/16	15/16	3 1/16	2 7/8	2 3/8	1 11/16	7/8	0	1 7/8	-7/16	-7/8	-1 1/8	-1 3/8	-1/8	-1 5/16	-3/16	1 1/16	-1 1/4	-1 1/8	-13/16	-7/16	0	1/4	1/4	3/8	1/2	1/2	3/4	1/4
B	0	0	7/8	1 5/8	2 1/4	2 3/4	2 15/16	3	3 15/16	15/16	2 15/16	2 3/4	2 1/4	1 5/8	7/8	0	1 13/16	-7/16	-13/16	-1 1/16	-1 5/16	-1/8	-1 1/4	-3/16	1 1/16	-1 3/16	-1 1/16	-3/4	-3/8	0	1/4	3/16	3/8	1/2	1/2	11/16	1/4
A	0	0	13/16	1 9/16	2 3/16	2 9/16	2 13/16	2 7/8	3 3/4	7/8	2 13/16	2 5/8	2 3/16	1 9/16	13/16	0	1 3/4	-3/8	-3/4	-1	-1 3/16	-1/8	-1 3/16	-3/16	1	-1 1/8	-1	-3/4	-3/8	0	3/16	3/16	5/16	7/16	7/16	5/8	3/16

GIRDERS AS FABRICATED WITH WEBS HORIZONTAL

BEAM				℄ BOLTED SPLICE 3									℄ PIER 18				℄ BOLTED SPLICE 4														
LINE	LINE 194	LINE 195	LINE 196	197	197	LINE 198	LINE 199	LINE 200	200.5	200.5	200.5	201	201	LINE 202	LINE 203	204	204	LINE 205	LINE 206	LINE 207	LINE 208	208.5	208.5	208.5	LINE 209	LINE 210	LINE 211	LINE 212
P	1/4	1/4	1/8	0	13/16	-3/16	-3/8	-1/2	-9/16	9/16	1 1/8	-9/16	9/16	-7/16	-1/4	0	1 7/16	3/8	11/16	1	1 1/16	1 1/8	2 9/16	1 7/16	1 1/16	15/16	11/16	3/8

																									S. END GIRDER M			
																									137	137	LINE 138	LINE 139
M																									0	2 3/16	0	0

				℄ BOLTED SPLICE 3									℄ PIER 18				℄ BOLTED SPLICE 4												
	LINE 87	LINE 88	LINE 89	90	90	LINE 91	LINE 92	LINE 93	93.5	93.5	93.5	94	94	LINE 95	LINE 96	97	97	LINE 98	LINE 99	LINE 100	LINE 101	101.5	101.5	101.5	LINE 102	LINE 103	LINE 104	LINE 105
L	5/16	1/4	3/16	0	1/16	-1/4	-1/2	-5/8	-11/16	-3/8	1/4	-11/16	-3/8	-9/16	-5/16	0	1/2	7/16	13/16	1 3/16	1 1/4	1 5/16	1 11/16	3/8	1 1/4	1 1/8	13/16	7/16

				℄ BOLTED SPLICE 3									℄ PIER 18				℄ BOLTED SPLICE 4												
	LINE 25	LINE 26	LINE 27	28	28	LINE 29	LINE 30	LINE 31	31.5	31.5	31.5	32	32	LINE 33	LINE 34	35	35	LINE 36	LINE 37	LINE 38	LINE 39	39.5	39.5	39.5	LINE 40	LINE 41	LINE 42	LINE 43
K	3/8	5/16	3/16	0	-1/4	-1/4	-1/2	-11/16	-3/4	-5/8	1/8	-3/4	-5/8	-9/16	-5/16	0	7/16	1/2	7/8	1 1/4	1 5/16	1 3/8	1 3/4	3/8	1 5/16	1 3/16	7/8	7/16
J	1/2	3/8	1/4	0	0	-5/16	-9/16	-3/4	-13/16	-7/16	3/8	-13/16	-7/16	-5/8	-3/8	0	11/16	1/2	1	1 3/8	1 1/2	1 1/2	2 3/16	5/8	1 7/16	1 5/16	15/16	1/2
H	9/16	7/16	1/4	0	1/8	-5/16	-5/8	-13/16	-7/8	-7/16	7/16	-7/8	-7/16	-11/16	-3/8	0	13/16	9/16	1 1/16	1 7/16	1 5/8	1 5/8	2 7/16	13/16	1 5/8	1 7/16	1 1/16	9/16
G	1/2	7/16	1/4	0	1/8	-5/16	-9/16	-3/4	-13/16	-3/8	7/16	-7/8	-3/8	-5/8	-3/8	0	3/4	9/16	1	1 3/8	1 9/16	1 5/8	2 3/8	3/4	1 9/16	1 3/8	1	9/16
F	1/2	7/16	1/4	0	3/16	-5/16	-9/16	-3/4	-13/16	-3/8	1/2	-7/8	-3/8	-11/16	-3/8	0	13/16	9/16	1	1 3/8	1 9/16	1 9/16	2 3/8	13/16	1 9/16	1 3/8	1	9/16
E	1/2	7/16	1/4	0	3/16	-5/16	-9/16	-3/4	-13/16	-5/16	1/2	-7/8	-5/16	-11/16	-3/8	0	13/16	9/16	1	1 3/8	1 1/2	1 9/16	2 3/8	13/16	1 1/2	1 3/8	1	1/2
D	1/2	7/16	1/4	0	1/4	-5/16	-9/16	-3/4	-13/16	-5/16	1/2	-7/8	-5/16	-11/16	-3/8	0	13/16	9/16	1	1 5/16	1 1/2	1 9/16	2 3/8	13/16	1 1/2	1 3/8	1	1/2
C	1/2	7/16	1/4	0	1/4	-5/16	-9/16	-3/4	-13/16	-5/16	1/2	-13/16	-5/16	-11/16	-3/8	0	13/16	1/2	15/16	1 5/16	1 1/2	1 1/2	2 5/16	13/16	1 7/16	1 5/16	1	1/2
B	7/16	3/8	3/16	0	1/4	-1/4	-9/16	-11/16	-3/4	-1/4	1/2	-13/16	-1/4	-5/8	-3/8	0	13/16	7/16	7/8	1 1/4	1 3/8	1 7/16	2 1/4	13/16	1 3/8	1 1/4	15/16	1/2
A	3/8	5/16	3/16	0	3/16	-1/4	-1/2	-11/16	-3/4	-1/4	1/2	-3/4	-1/4	-5/8	-3/8	0	13/16	7/16	13/16	1 1/8	1 5/16	1 5/16	2 1/8	3/4	1 1/4	1 1/8	7/8	7/16

NOTES:

LINE NUMBERS CORRESPOND TO THE HEXAGONAL NUMBERS SHOWN ON THE SLAB ELEVATIONS SHEET.

WORK THIS SHEET WITH THE "SLAB ELEVATION PLAN" ON DES. SHTS. 192 & 193 AND THE "GIRDER FABRICATION DIAGRAM" ON DES. SHT. 122-125.

NUMBERS THAT ARE NOT ENCLOSED INDICATE DIMENSION FROM CHORD BETWEEN SPLICES TO TOP OF WEB.

ENCIRCLED NUMBERS INDICATE DIMENSION FROM CHORD BETWEEN GIRDER END BEARINGS TO TOP OF WEB.

HEXAGONAL NUMBERS INDICATE DIMENSION FROM CHORD BETWEEN GIRDER END BEARINGS TO CHORD BETWEEN SPLICES.

NEGATIVE CAMBER VALUES INDICATE THAT THE WEB IS CAMBERED DOWNWARD. NEGATIVE VALUES DO NOT INDICATE THAT THE CAMBER IS OPPOSITE OF THE SHAPE DEFINED BY THE "GIRDER FABRICATION DIAGRAM."

whks
engineers + planners + land surveyors

DESIGN FOR VARIABLE SKEW (L.A.)

2271'-6 x VARI. CONTINUOUS WELDED GIRDER BRIDGE-EBL W/14' BIKE TRAIL

138'-10 & 151'-0 7/8 END SPANS MULTIPLE LENGTH INTERIOR SPANS

GIRDER FABRICATION TABLE-UNIT 1

STA. 6792+60.93 - 52' LEFT ℄ I-74 OCTOBER, 2015

SCOTT COUNTY

IOWA DEPARTMENT OF TRANSPORTATION - HIGHWAY DIVISION

DESIGN SHEET NO. 127 OF 282 FILE NO. 30253 DESIGN NO. 3408

GIRDERS AS FABRICATED WITH WEBS HORIZONTAL

BEAM	℄ BOLTED SPLICE 5				℄ PIER 19								℄ BOLTED SPLICE 6									℄ BOLTED SPLICE 7								℄ PIER 20				℄ BOLTED SPLICE 8	
LINE	213	213	LINE 214	LINE 215	216	216	216.5	216.5	216.5	LINE 217	LINE 218	LINE 219	220	220	LINE 221	LINE 222	222.5	222.5	222.5	LINE 223	LINE 224	225	225	LINE 226	LINE 227	LINE 228	229	229	229	230	230	LINE 231	LINE 232	233	233
P	0	1 7/16	-3/16	-3/8	-9/16	3/8	-9/16	3/8	7/8	-1/2	-3/8	-3/16	0	3/8	1/8	1/4	1/4	3/8	1/8	3/16	1/8	0	-1/16	-1/4	-1/2	-5/8	-5/8	-3/8	5/16	-11/16	-5/16	-1/2	-5/16	0	3/4
																						S. END GIRDER N		℄ PIER 20										℄ BOLTED SPLICE 8	
																						172	172	LINE 173	LINE 174	LINE 175	175.5	175.5	175.5	176	176	LINE 177	LINE 178	179	179
N																						0	0	-3/8	-5/8	-3/4	-3/4	-3/8	3/8	-3/4	-5/16	-9/16	-5/16	0	13/16
								℄ PIER 19					℄ BOLTED SPLICE 6									℄ BOLTED SPLICE 7								℄ PIER 20				℄ BOLTED SPLICE 8	
	LINE 140	LINE 141	LINE 142	142.5	142.5	142.5	LINE 143	144	144	LINE 145	LINE 146	LINE 147	148	148	LINE 149	LINE 150	150.5	150.5	150.5	LINE 151	LINE 152	153	153	LINE 154	LINE 155	LINE 156	157	157	157	158	158	LINE 159	LINE 160	161	161
M	-1/8	-5/16	-1/2	-9/16	3/8	15/16	-5/8	-3/4	-1/4	-5/8	-1/2	-5/16	0	-5/16	1/8	3/16	3/16	-1/4	-7/16	3/16	1/8	0	-9/16	-1/4	-1/2	-11/16	-13/16	-15/16	-1/8	-7/8	-7/8	-5/8	-3/8	0	5/16
	℄ BOLTED SPLICE 5				℄ PIER 19								℄ BOLTED SPLICE 6									℄ BOLTED SPLICE 7								℄ PIER 20				℄ BOLTED SPLICE 8	
	106	106	LINE 107	LINE 108	109	109	109.5	109.5	109.5	LINE 110	LINE 111	LINE 112	113	113	LINE 114	LINE 115	115.5	115.5	115.5	LINE 116	LINE 117	118	118	LINE 119	LINE 120	LINE 121	122	122	122	123	123	LINE 124	LINE 125	126	126
L	0	1/4	-1/4	-7/16	-5/8	-13/16	-5/8	-7/8	-1/4	-9/16	-7/16	-1/4	0	-13/16	1/8	3/16	3/16	-5/8	-13/16	3/16	1/8	0	-7/8	-1/4	-1/2	-11/16	-13/16	-1 1/8	-5/16	-7/8	-1	-5/8	-3/8	0	1/4
	℄ BOLTED SPLICE 5				℄ PIER 19								℄ BOLTED SPLICE 6									℄ BOLTED SPLICE 7								℄ PIER 20				℄ BOLTED SPLICE 8	
	44	44	LINE 45	LINE 46	47	47	47.5	47.5	47.5	LINE 48	LINE 49	LINE 50	51	51	LINE 52	LINE 53	54	54	54	LINE 55	LINE 56	57	57	LINE 58	LINE 59	LINE 60	60.5	60.5	60.5	61	61	LINE 62	LINE 63	64	64
K	0	5/16	-5/16	-1/2	-11/16	-13/16	-5/8	-7/8	-3/16	-5/8	-1/2	-1/4	0	-3/4	1/8	3/16	3/16	-5/8	-13/16	3/16	1/8	0	-7/8	-5/16	-5/8	-13/16	-13/16	-1 1/16	-3/16	-7/8	-1	-11/16	-3/8	0	1/2
J	0	5/8	-5/16	-9/16	-3/4	-11/16	-11/16	-3/4	0	-11/16	-1/2	-5/16	0	-11/16	1/8	3/16	1/4	-1/2	-3/4	3/16	1/8	0	-3/4	-5/16	-5/8	-13/16	-7/8	-15/16	-1/16	-7/8	-7/8	-11/16	-3/8	0	5/8
H	0	13/16	-3/8	-5/8	-13/16	-5/8	-3/4	-11/16	1/16	-3/4	-9/16	-5/16	0	-11/16	1/8	3/16	1/4	-1/2	-11/16	3/16	1/8	0	-3/4	-5/16	-5/8	-13/16	-7/8	-7/8	0	-7/8	-13/16	-11/16	-3/8	0	11/16
G	0	3/4	-3/8	-9/16	-3/4	-9/16	-3/4	-11/16	1/16	-11/16	-9/16	-5/16	0	-5/8	1/8	3/16	1/4	-7/16	-5/8	3/16	1/8	0	-11/16	-3/8	-5/8	-13/16	-7/8	-13/16	1/16	-15/16	-3/4	-11/16	-3/8	0	3/4
F	0	13/16	-3/8	-5/8	-3/4	-9/16	-3/4	-5/8	1/8	-11/16	-1/2	-1/4	0	-9/16	1/8	3/16	1/4	-5/16	-9/16	3/16	1/8	0	-5/8	-3/8	-5/8	-13/16	-7/8	-3/4	1/16	-15/16	-11/16	-11/16	-3/8	0	13/16
E	0	13/16	-5/16	-9/16	-3/4	-1/2	-3/4	-9/16	3/16	-11/16	-1/2	-1/4	0	-1/2	1/8	3/16	1/4	-1/4	-1/2	3/16	1/8	0	-9/16	-3/8	-5/8	-13/16	-7/8	-11/16	1/8	-7/8	-11/16	-11/16	-3/8	0	13/16
D	0	13/16	-5/16	-9/16	-3/4	-1/2	-3/4	-1/2	3/16	-11/16	-1/2	-5/16	0	-7/16	1/8	3/16	1/4	-3/16	-7/16	3/16	1/8	0	-7/16	-3/8	-5/8	-13/16	-13/16	-5/8	3/16	-7/8	-5/8	-11/16	-3/8	0	13/16
C	0	13/16	-5/16	-9/16	-3/4	-7/16	-11/16	-1/2	1/4	-11/16	-1/2	-5/16	0	-3/8	1/8	3/16	1/4	-1/8	-3/8	3/16	1/8	0	-3/8	-5/16	-9/16	-3/4	-13/16	-5/8	3/16	-7/8	-9/16	-11/16	-3/8	0	13/16
B	0	13/16	-1/4	-1/2	-11/16	-3/8	-11/16	-7/16	1/4	-5/8	-1/2	-1/4	0	-5/16	1/8	3/16	1/4	-1/8	-3/8	3/16	1/8	0	-3/8	-5/16	-9/16	-3/4	-13/16	-9/16	1/4	-13/16	-1/2	-11/16	-3/8	0	13/16
A	0	3/4	-1/4	-1/2	-11/16	-3/8	-5/8	-7/16	1/4	-5/8	-1/2	-1/4	0	-5/16	1/16	3/16	3/16	-1/8	-5/16	3/16	1/8	0	-3/8	-5/16	-1/2	-11/16	-3/4	-1/2	1/4	-13/16	-1/2	-5/8	-5/16	0	13/16

NOTES:

SEE DES. SHT. 127 FOR GIRDER FABRICATION TABLE NOTES.

whks
engineers + planners + land surveyors

DESIGN FOR VARIABLE SKEW (L.A.)

2271'-6 x VARI. CONTINUOUS WELDED GIRDER BRIDGE-EBL W/14' BIKE TRAIL

138'-10 & 151'-0 7/8 END SPANS MULTIPLE LENGTH INTERIOR SPANS

GIRDER FABRICATION TABLE-UNIT 1

STA. 6792+60.93 - 52' LEFT ℄ I-74 OCTOBER, 2015

SCOTT COUNTY

IOWA DEPARTMENT OF TRANSPORTATION - HIGHWAY DIVISION

DESIGN SHEET NO. 128 OF 282 FILE NO. 30253 DESIGN NO. 3408

GIRDERS AS FABRICATED WITH WEBS HORIZONTAL

BEAM LINE												℄ BRG. PIER 21	
	LINE 234	LINE 235	LINE 236	LINE 237	238	238	238	LINE 239	LINE 240	LINE 241	LINE 242	243	243
P	9/16	1	1 5/16	1 1/2	1 1/2	1 7/8	3/8	1 3/8	1 1/16	3/4	7/16	0	0
												℄ BRG. PIER 21	
	LINE 180	LINE 181	LINE 182	LINE 183	184	184	184	LINE 185	LINE 186	LINE 187	LINE 188	189	189
N	9/16	1 1/16	1 3/8	1 9/16	1 9/16	2	3/8	1 7/16	1 3/16	13/16	7/16	0	0
												℄ BRG. PIER 21	
	LINE 162	LINE 163	LINE 164	LINE 165	166	166	166	LINE 167	LINE 168	LINE 169	LINE 170	171	171
M	9/16	1 1/8	1 7/16	1 5/8	1 11/16	1 7/8	3/16	1 1/2	1 1/4	7/8	7/16	0	0
												℄ BRG. PIER 21	
	LINE 127	LINE 128	LINE 129	LINE 130	131	131	131	LINE 132	LINE 133	LINE 134	LINE 135	136	136
L	5/8	1 3/16	1 9/16	1 13/16	1 13/16	1 15/16	1/8	1 5/8	1 3/8	15/16	1/2	0	0
												℄ BRG. PIER 21	
	LINE 65	LINE 66	LINE 67	LINE 68	69	69	69	LINE 70	LINE 71	LINE 72	LINE 73	74	74
K	11/16	1 3/16	1 9/16	1 13/16	1 13/16	2 1/16	1/4	1 11/16	1 3/8	15/16	1/2	0	0
J	11/16	1 1/4	1 11/16	1 7/8	1 15/16	2 1/4	5/16	1 13/16	1 7/16	1	1/2	0	0
H	3/4	1 5/16	1 3/4	2	2 1/16	2 3/8	3/8	1 7/8	1 9/16	1 1/16	9/16	0	0
G	3/4	1 5/16	1 3/4	2 1/16	2 1/8	2 1/2	3/8	1 15/16	1 9/16	1 1/8	9/16	0	0
F	3/4	1 5/16	1 3/4	2 1/16	2 1/8	2 1/2	3/8	1 15/16	1 9/16	1 1/8	9/16	0	0
E	11/16	1 5/16	1 3/4	2 1/16	2 1/16	2 1/2	7/16	1 15/16	1 9/16	1 1/16	9/16	0	0
D	11/16	1 5/16	1 3/4	2	2 1/16	2 1/2	7/16	1 7/8	1 1/2	1 1/16	9/16	0	0
C	5/8	1 1/4	1 11/16	1 15/16	2	2 7/16	7/16	1 13/16	1 1/2	1 1/16	9/16	0	0
B	9/16	1 3/16	1 9/16	1 13/16	1 7/8	2 5/16	3/8	1 3/4	1 3/8	1	1/2	0	0
A	9/16	1 1/16	1 7/16	1 11/16	1 3/4	2 1/8	3/8	1 9/16	1 1/4	7/8	7/16	0	0

NOTES:

SEE DES. SHT. 127 FOR GIRDER FABRICATION TABLE NOTES.

whks
engineers + planners + land surveyors

DESIGN FOR VARIABLE SKEW (L.A.)

2271'-6 x VARI. CONTINUOUS WELDED GIRDER BRIDGE-EBL W/14' BIKE TRAIL

138'-10 & 151'-0 7/8 END SPANS MULTIPLE LENGTH INTERIOR SPANS

GIRDER FABRICATION TABLE-UNIT 1

STA. 6792+60.93 - 52' LEFT ℄ I-74 OCTOBER, 2015

SCOTT COUNTY

IOWA DEPARTMENT OF TRANSPORTATION - HIGHWAY DIVISION

DESIGN SHEET NO. 129 OF 282 FILE NO. 30253 DESIGN NO. 3408

DEAD LOAD DEFLECTION DUE TO CONCRETE SLAB

BEAM	℄ BRG. PIER 16											℄ BOLTED SPLICE 1				℄ PIER 17					℄ BOLTED SPLICE 2							℄ BOLTED SPLICE 3				℄ PIER 18			℄ BOLTED SPLICE 4		
LINE	LINE 1	LINE 2	LINE 3	LINE 4	LINE 5	LINE 6	LINE 7	LINE 8	LINE 9	LINE 10	LINE 11	LINE 12	LINE 13	LINE 14	LINE 15	LINE 16	LINE 17	LINE 18	LINE 19	LINE 20	LINE 190	LINE 191	LINE 192	LINE 193	LINE 194	LINE 195	LINE 196	LINE 197	LINE 198	LINE 199	LINE 200	LINE 201	LINE 202	LINE 203	LINE 204	LINE 205	LINE 206
P	0	9/16	1 1/8	1 5/8	1 15/16	2 3/16	2 1/4	2 1/4	2 1/16	1 13/16	1 7/16	1 1/16	3/4	7/16	3/16	0	-1/16	-1/16	-1/16	1/16	1/8	3/16	1/4	5/16	5/16	1/4	3/16	1/8	1/16	0	-1/16	0	3/16	3/8	11/16	15/16	1 3/16

	S. END GIRDER L			℄ PIER 17					℄ BOLTED SPLICE 2							℄ BOLTED SPLICE 3				℄ PIER 18			℄ BOLTED SPLICE 4		
	LINE 75	LINE 76	LINE 77	LINE 78	LINE 79	LINE 80	LINE 81	LINE 82	LINE 83	LINE 84	LINE 85	LINE 86	LINE 87	LINE 88	LINE 89	LINE 90	LINE 91	LINE 92	LINE 93	LINE 94	LINE 95	LINE 96	LINE 97	LINE 98	LINE 99
L	1	9/16	1/4	0	-1/16	-1/16	0	1/8	3/16	5/16	7/16	7/16	7/16	7/16	5/16	3/16	1/16	0	0	0	3/16	1/2	13/16	1 1/8	1 7/16

BEAM	℄ BRG. PIER 16											℄ BOLTED SPLICE 1				℄ PIER 17					℄ BOLTED SPLICE 2							℄ BOLTED SPLICE 3				℄ PIER 18			℄ BOLTED SPLICE 4		
LINE	LINE 1	LINE 2	LINE 3	LINE 4	LINE 5	LINE 6	LINE 7	LINE 8	LINE 9	LINE 10	LINE 11	LINE 12	LINE 13	LINE 14	LINE 15	LINE 16	LINE 17	LINE 18	LINE 19	LINE 20	LINE 21	LINE 22	LINE 23	LINE 24	LINE 25	LINE 26	LINE 27	LINE 28	LINE 29	LINE 30	LINE 31	LINE 32	LINE 33	LINE 34	LINE 35	LINE 36	LINE 37
K	0	11/16	1 3/8	1 15/16	2 3/8	2 5/8	2 3/4	2 11/16	2 1/2	2 3/16	1 3/4	1 1/4	7/8	1/2	1/4	0	-1/16	-1/16	0	1/8	1/4	7/16	1/2	5/8	9/16	1/2	3/8	1/4	1/8	0	0	0	1/4	9/16	7/8	1 1/4	1 9/16
J	0	13/16	1 9/16	2 1/4	2 3/4	3 1/16	3 1/4	3 3/16	2 15/16	2 9/16	2 1/16	1 1/2	1 1/16	5/8	5/16	0	-1/16	-1/16	1/16	3/16	3/8	9/16	11/16	3/4	3/4	5/8	1/2	5/16	3/16	1/16	0	0	1/4	9/16	15/16	1 3/8	1 3/4
H	0	15/16	1 13/16	2 9/16	3 1/8	3 1/2	3 11/16	3 5/8	3 3/8	2 15/16	2 3/8	1 3/4	1 1/4	3/4	3/8	0	-1/16	-1/8	1/16	3/16	3/8	5/8	13/16	7/8	7/8	13/16	5/8	7/16	1/4	1/16	0	0	1/4	5/8	1	1 1/2	1 7/8
G	0	7/8	1 3/4	2 7/16	3	3 5/16	3 1/2	3 1/2	3 3/16	2 13/16	2 1/4	1 11/16	1 3/16	3/4	3/8	0	-1/16	-1/8	0	3/16	3/8	9/16	11/16	13/16	13/16	11/16	9/16	3/8	3/16	1/16	0	0	1/4	5/8	1	1 7/16	1 13/16
F	0	7/8	1 11/16	2 7/16	2 15/16	3 5/16	3 7/16	3 7/16	3 3/16	2 3/4	2 1/4	1 5/8	1 3/16	11/16	5/16	0	-1/16	-1/16	0	3/16	3/8	9/16	3/4	13/16	13/16	3/4	9/16	3/8	1/4	1/16	0	0	1/4	9/16	1	1 7/16	1 13/16
E	0	7/8	1 11/16	2 3/8	2 15/16	3 1/4	3 7/16	3 3/8	3 1/8	2 11/16	2 3/16	1 5/8	1 3/16	11/16	5/16	0	-1/16	-1/16	0	3/16	3/8	5/8	3/4	13/16	13/16	3/4	9/16	3/8	1/4	1/16	0	0	1/4	9/16	15/16	1 7/16	1 13/16
D	0	7/8	1 5/8	2 5/16	2 7/8	3 3/16	3 3/8	3 5/16	3 1/16	2 11/16	2 3/16	1 5/8	1 1/8	11/16	5/16	0	-1/16	-1/16	0	3/16	3/8	5/8	3/4	13/16	13/16	3/4	9/16	7/16	1/4	1/16	0	0	1/4	9/16	15/16	1 3/8	1 3/4
C	0	13/16	1 5/8	2 1/4	2 3/4	3 1/16	3 1/4	3 1/4	2 15/16	2 9/16	2 1/8	1 9/16	1 1/8	5/8	5/16	0	-1/16	-1/16	0	3/16	3/8	9/16	11/16	13/16	13/16	3/4	9/16	3/8	1/4	1/16	0	0	1/4	9/16	15/16	1 5/16	1 11/16
B	0	13/16	1 1/2	2 3/16	2 5/8	2 15/16	3 1/8	3 1/16	2 13/16	2 1/2	2 1/16	1 1/2	1 1/16	5/8	5/16	0	-1/16	-1/16	0	3/16	3/8	1/2	5/8	3/4	3/4	11/16	9/16	3/8	3/16	1/16	0	0	3/16	1/2	7/8	1 1/4	1 5/8
A	0	3/4	1 7/16	2 1/16	2 1/2	2 13/16	2 15/16	2 15/16	2 11/16	2 3/8	1 15/16	1 7/16	1	9/16	5/16	0	-1/16	-1/8	0	1/8	5/16	7/16	9/16	5/8	5/8	9/16	7/16	5/16	3/16	1/16	0	0	3/16	1/2	7/8	1 3/16	1 1/2

TOTAL DEAD LOAD DEFLECTION

BEAM	℄ BRG. PIER 16											℄ BOLTED SPLICE 1				℄ PIER 17					℄ BOLTED SPLICE 2							℄ BOLTED SPLICE 3				℄ PIER 18			℄ BOLTED SPLICE 4		
LINE	LINE 1	LINE 2	LINE 3	LINE 4	LINE 5	LINE 6	LINE 7	LINE 8	LINE 9	LINE 10	LINE 11	LINE 12	LINE 13	LINE 14	LINE 15	LINE 16	LINE 17	LINE 18	LINE 19	LINE 20	LINE 190	LINE 191	LINE 192	LINE 193	LINE 194	LINE 195	LINE 196	LINE 197	LINE 198	LINE 199	LINE 200	LINE 201	LINE 202	LINE 203	LINE 204	LINE 205	LINE 206
P	0	3/4	1 7/16	2 1/16	2 9/16	2 13/16	2 15/16	2 15/16	2 11/16	2 5/16	1 7/8	1 5/16	15/16	9/16	1/4	0	-1/16	-1/16	0	1/8	5/16	7/16	1/2	9/16	9/16	1/2	3/8	1/4	1/8	0	0	0	3/16	1/2	7/8	1 3/16	1 9/16

	S. END GIRDER L			℄ PIER 17					℄ BOLTED SPLICE 2							℄ BOLTED SPLICE 3				℄ PIER 18			℄ BOLTED SPLICE 4		
	LINE 75	LINE 76	LINE 77	LINE 78	LINE 79	LINE 80	LINE 81	LINE 82	LINE 83	LINE 84	LINE 85	LINE 86	LINE 87	LINE 88	LINE 89	LINE 90	LINE 91	LINE 92	LINE 93	LINE 94	LINE 95	LINE 96	LINE 97	LINE 98	LINE 99
L	1 1/4	3/4	5/16	0	-1/16	-1/16	1/16	3/16	3/8	1/2	5/8	11/16	11/16	5/8	1/2	3/8	3/16	1/16	0	0	1/4	9/16	1	1 7/16	1 13/16

BEAM	℄ BRG. PIER 16											℄ BOLTED SPLICE 1				℄ PIER 17					℄ BOLTED SPLICE 2							℄ BOLTED SPLICE 3				℄ PIER 18			℄ BOLTED SPLICE 4		
LINE	LINE 1	LINE 2	LINE 3	LINE 4	LINE 5	LINE 6	LINE 7	LINE 8	LINE 9	LINE 10	LINE 11	LINE 12	LINE 13	LINE 14	LINE 15	LINE 16	LINE 17	LINE 18	LINE 19	LINE 20	LINE 21	LINE 22	LINE 23	LINE 24	LINE 25	LINE 26	LINE 27	LINE 28	LINE 29	LINE 30	LINE 31	LINE 32	LINE 33	LINE 34	LINE 35	LINE 36	LINE 37
K	0	15/16	1 3/4	2 1/2	3 1/16	3 3/8	3 9/16	3 1/2	3 3/16	2 13/16	2 1/4	1 5/8	1 1/8	11/16	5/16	0	-1/16	-1/16	1/16	1/4	3/8	9/16	3/4	13/16	13/16	11/16	9/16	3/8	3/16	0	0	0	5/16	11/16	1 1/8	1 9/16	2
J	0	1 1/16	2 1/16	2 15/16	3 9/16	3 15/16	4 1/8	4 1/8	3 3/4	3 5/16	2 11/16	1 15/16	1 3/8	13/16	3/8	0	-1/8	-1/8	1/16	1/4	7/16	11/16	13/16	15/16	15/16	13/16	11/16	7/16	3/16	1/16	0	0	5/16	11/16	1 3/16	1 11/16	2 3/16
H	0	1 3/16	2 5/16	3 5/16	4	4 1/2	4 3/4	4 11/16	4 5/16	3 13/16	3 1/8	2 1/4	1 5/8	15/16	7/16	0	-1/8	-1/8	0	3/16	7/16	11/16	15/16	1 1/16	1	15/16	3/4	1/2	1/4	1/16	0	0	5/16	3/4	1 1/4	1 13/16	2 5/16
G	0	1 1/8	2 3/16	3 1/8	3 13/16	4 1/4	4 1/2	4 7/16	4 1/8	3 9/16	2 15/16	2 1/8	1 9/16	15/16	7/16	0	-1/8	-1/8	0	3/16	7/16	11/16	7/8	1	15/16	7/8	11/16	7/16	1/4	1/8	1/16	0	5/16	3/4	1 3/16	1 3/4	2 1/4
F	0	1 1/8	2 3/16	3 1/16	3 13/16	4 3/16	4 7/16	4 3/8	4 1/16	3 9/16	2 7/8	2 1/8	1 1/2	15/16	7/16	0	-1/8	-1/8	0	3/16	7/16	11/16	7/8	1	1	7/8	11/16	1/2	1/4	1/8	0	0	5/16	3/4	1 3/16	1 3/4	2 1/4
E	0	1 1/8	2 1/8	3 1/16	3 3/4	4 3/16	4 3/8	4 5/16	4	3 1/2	2 13/16	2 1/16	1 1/2	7/8	7/16	0	-1/8	-1/8	0	1/4	7/16	3/4	15/16	1	1	15/16	3/4	1/2	5/16	1/8	0	0	5/16	11/16	1 3/16	1 3/4	2 3/16
D	0	1 1/8	2 1/8	3	3 11/16	4 1/16	4 5/16	4 1/4	3 15/16	3 7/16	2 13/16	2 1/16	1 7/16	7/8	7/16	0	-1/16	-1/8	0	1/4	1/2	3/4	15/16	1 1/16	1	15/16	3/4	1/2	5/16	1/8	0	0	5/16	11/16	1 3/16	1 11/16	2 3/16
C	0	1 1/16	2 1/16	2 15/16	3 9/16	4	4 3/16	4 1/8	3 13/16	3 5/16	2 3/4	2	1 7/16	13/16	3/8	0	-1/16	-1/8	0	1/4	7/16	11/16	7/8	1	1	7/8	3/4	1/2	5/16	1/8	0	0	1/4	11/16	1 1/8	1 5/8	2 1/16
B	0	1 1/16	2	2 13/16	3 7/16	3 13/16	4	4	3 11/16	3 1/4	2 5/8	1 15/16	1 3/8	13/16	3/8	0	-1/8	-1/8	0	3/16	7/16	5/8	13/16	15/16	15/16	13/16	11/16	1/2	1/4	1/16	0	0	1/4	5/8	1 1/8	1 9/16	2
A	0	1	1 7/8	2 11/16	3 1/4	3 5/8	3 13/16	3 13/16	3 1/2	3 1/16	2 1/2	1 13/16	1 5/16	3/4	3/8	0	-1/8	-1/8	0	3/16	3/8	9/16	11/16	13/16	13/16	3/4	5/8	7/16	1/4	1/16	0	0	1/4	5/8	1 1/16	1 1/2	1 7/8

NOTES:
LINE NUMBERS CORRESPOND TO THE HEXAGONAL NUMBERS SHOWN ON THE SLAB ELEVATION SHEET.

WORK THIS SHEET WITH THE "SLAB ELEVATION PLAN" ON DESIGN SHEETS 192 & 193 AND THE "DEFLECTION DIAGRAMS" ON DESIGN SHEETS 122 -125.

NEGATIVE NUMBERS INDICATE UPWARD DEFLECTION. NEGATIVE VALUES DO NOT INDICATE THAT THE DEFLECTION IS OPPOSITE OF THE SHAPE DEFINED BY THE "DEAD LOAD DEFLECTION DIAGRAM."

whks
engineers + planners + land surveyors

DESIGN FOR VARIABLE SKEW (L.A.)

2271'-6 x VARI. CONTINUOUS WELDED GIRDER BRIDGE-EBL W/14' BIKE TRAIL

138'-10 & 151'-0 7/8 END SPANS MULTIPLE LENGTH INTERIOR SPANS

DEFLECTION TABLES - UNIT 1

STA. 6792+60.93 - 52' LEFT ℄ I-74 OCTOBER, 2015

SCOTT COUNTY

IOWA DEPARTMENT OF TRANSPORTATION - HIGHWAY DIVISION

DESIGN SHEET NO. 130 OF 282 FILE NO. 30253 DESIGN NO. 3408

DESIGN TEAM MG / BB / CF | SCOTT COUNTY | PROJECT NUMBER BRFIM-074-1(200)5--05-82 | SHEET NUMBER 131

DEAD LOAD DEFLECTION DUE TO CONCRETE SLAB

BEAM							℄ BOLTED SPLICE 5			℄ PIER 19				℄ BOLTED SPLICE 6					℄ BOLTED SPLICE 7					℄ PIER 20		℄ BOLTED SPLICE 8										℄ BRG. PIER 21
LINE	LINE 207	LINE 208	LINE 209	LINE 210	LINE 211	LINE 212	LINE 213	LINE 214	LINE 215	LINE 216	LINE 217	LINE 218	LINE 219	LINE 220	LINE 221	LINE 222	LINE 223	LINE 224	LINE 225	LINE 226	LINE 227	LINE 228	LINE 229	LINE 230	LINE 231	LINE 232	LINE 233	LINE 234	LINE 235	LINE 236	LINE 237	LINE 238	LINE 239	LINE 240	LINE 241	LINE 242	LINE 243
P	1 7/16	1 1/2	1 1/2	1 7/16	1 1/4	1	3/4	7/16	3/16	0	0	0	0	1/8	3/16	1/4	3/16	1/8	0	-1/16	-1/8	-1/16	-1/16	0	1/4	9/16	15/16	1 3/8	1 3/4	2	2 1/8	2 1/8	1 15/16	1 9/16	1 1/8	5/8	0
																				S. END GIRDER N				℄ PIER 20			℄ BOLTED SPLICE 8										℄ BRG. PIER 21
																				LINE 172	LINE 173	LINE 174	LINE 175	LINE 176	LINE 177	LINE 178	LINE 179	LINE 180	LINE 181	LINE 182	LINE 183	LINE 184	LINE 185	LINE 186	LINE 187	LINE 188	LINE 189
N																				1/16	-1/16	-1/8	-1/8	0	1/4	5/8	1	1 7/16	1 13/16	2 1/16	2 3/16	2 3/16	2	1 11/16	1 3/16	5/8	0
			S. END GIRDER M							℄ PIER 19				℄ BOLTED SPLICE 6					℄ BOLTED SPLICE 7					℄ PIER 20		℄ BOLTED SPLICE 8										℄ BRG. PIER 21
			LINE 137	LINE 138	LINE 139	LINE 140	LINE 141	LINE 142	LINE 143	LINE 144	LINE 145	LINE 146	LINE 147	LINE 148	LINE 149	LINE 150	LINE 151	LINE 152	LINE 153	LINE 154	LINE 155	LINE 156	LINE 157	LINE 158	LINE 159	LINE 160	LINE 161	LINE 162	LINE 163	LINE 164	LINE 165	LINE 166	LINE 167	LINE 168	LINE 169	LINE 170	LINE 171
M			1 11/16	1 9/16	1 3/8	1 1/8	13/16	1/2	1/4	0	-1/16	0	0	1/8	3/16	1/4	1/4	3/16	1/8	0	-1/16	-1/8	-1/16	0	5/16	5/8	1	1 1/2	1 7/8	2 3/16	2 5/16	2 5/16	2 1/8	1 3/4	1 1/4	11/16	0
							℄ BOLTED SPLICE 5			℄ PIER 19				℄ BOLTED SPLICE 6					℄ BOLTED SPLICE 7					℄ PIER 20		℄ BOLTED SPLICE 8										℄ BRG. PIER 21
	LINE 100	LINE 101	LINE 102	LINE 103	LINE 104	LINE 105	LINE 106	LINE 107	LINE 108	LINE 109	LINE 110	LINE 111	LINE 112	LINE 113	LINE 114	LINE 115	LINE 116	LINE 117	LINE 118	LINE 119	LINE 120	LINE 121	LINE 122	LINE 123	LINE 124	LINE 125	LINE 126	LINE 127	LINE 128	LINE 129	LINE 130	LINE 131	LINE 132	LINE 133	LINE 134	LINE 135	LINE 136
L	1 11/16	1 3/4	1 3/4	1 5/8	1 3/8	1 1/8	3/4	1/2	1/4	0	-1/16	-1/16	0	1/16	3/16	1/4	1/4	3/16	1/16	0	-1/16	-1/8	-1/8	0	5/16	5/8	1 1/16	1 9/16	1 15/16	2 1/4	2 7/16	2 7/16	2 3/16	1 13/16	1 5/16	11/16	0
							℄ BOLTED SPLICE 5			℄ PIER 19				℄ BOLTED SPLICE 6					℄ BOLTED SPLICE 7					℄ PIER 20		℄ BOLTED SPLICE 8										℄ BRG. PIER 21
	LINE 38	LINE 39	LINE 40	LINE 41	LINE 42	LINE 43	LINE 44	LINE 45	LINE 46	LINE 47	LINE 48	LINE 49	LINE 50	LINE 51	LINE 52	LINE 53	LINE 54	LINE 55	LINE 56	LINE 57	LINE 58	LINE 59	LINE 60	LINE 61	LINE 62	LINE 63	LINE 64	LINE 65	LINE 66	LINE 67	LINE 68	LINE 69	LINE 70	LINE 71	LINE 72	LINE 73	LINE 74
K	1 7/8	1 15/16	1 15/16	1 13/16	1 9/16	1 1/4	7/8	9/16	1/4	0	-1/16	-1/16	0	1/16	3/16	3/16	1/4	3/16	1/8	0	-1/16	-1/8	-1/8	0	5/16	3/4	1 3/16	1 11/16	2 1/8	2 3/8	2 1/2	2 1/2	2 5/16	1 7/8	1 3/8	3/4	0
J	2 1/16	2 3/16	2 3/16	2 1/16	1 3/4	1 7/16	1	5/8	5/16	0	-1/16	-1/8	-1/16	1/16	1/8	3/16	3/16	3/16	1/8	0	-1/16	-1/8	-1/8	0	5/16	3/4	1 1/4	1 3/4	2 3/16	2 7/16	2 5/8	2 5/8	2 3/8	2	1 7/16	3/4	0
H	2 1/4	2 3/8	2 3/8	2 1/4	2	1 9/16	1 1/8	11/16	5/16	0	-1/8	-1/8	-1/8	0	1/16	1/8	3/16	1/8	1/16	0	-1/8	-1/8	-1/8	0	3/8	3/4	1 1/4	1 13/16	2 1/4	2 9/16	2 11/16	2 11/16	2 1/2	2 1/16	1 1/2	3/4	0
G	2 1/8	2 5/16	2 5/16	2 3/16	1 7/8	1 1/2	1 1/16	5/8	5/16	0	-1/8	-1/8	-1/16	0	1/16	1/8	3/16	1/8	1/16	0	-1/8	-1/8	-1/8	0	3/8	13/16	1 5/16	1 13/16	2 1/4	2 9/16	2 3/4	2 3/4	2 1/2	2 1/16	1 1/2	3/4	0
F	2 1/8	2 1/4	2 1/4	2 3/16	1 7/8	1 1/2	1 1/16	5/8	5/16	0	-1/16	-1/8	-1/16	0	1/8	3/16	3/16	3/16	1/8	0	-1/16	-1/8	-1/8	0	5/16	3/4	1 1/4	1 13/16	2 1/4	2 9/16	2 11/16	2 11/16	2 7/16	2 1/16	1 7/16	3/4	0
E	2 1/16	2 1/4	2 1/4	2 1/8	1 7/8	1 1/2	1 1/16	5/8	5/16	0	-1/16	-1/16	-1/16	1/16	1/8	3/16	1/4	3/16	1/8	1/16	-1/16	-1/8	-1/8	0	5/16	3/4	1 1/4	1 3/4	2 3/16	2 1/2	2 5/8	2 5/8	2 7/16	2	1 7/16	3/4	0
D	2 1/16	2 3/16	2 3/16	2 1/16	1 13/16	1 7/16	1	5/8	5/16	0	-1/16	-1/16	0	1/16	3/16	1/4	1/4	1/4	3/16	1/16	-1/16	-1/16	-1/16	0	5/16	3/4	1 3/16	1 11/16	2 1/8	2 7/16	2 9/16	2 9/16	2 3/8	1 15/16	1 3/8	3/4	0
C	2	2 1/8	2 1/8	2	1 3/4	1 3/8	1	5/8	5/16	0	-1/16	-1/16	0	1/16	3/16	1/4	1/4	1/4	3/16	1/16	0	-1/16	-1/16	0	5/16	11/16	1 1/8	1 5/8	2	2 5/16	2 1/2	2 7/16	2 1/4	1 7/8	1 3/8	3/4	0
B	1 7/8	2	2	1 15/16	1 11/16	1 5/16	15/16	9/16	5/16	0	-1/16	-1/16	0	1/16	3/16	1/4	1/4	1/4	3/16	1/16	0	-1/16	-1/16	0	1/4	11/16	1 1/16	1 1/2	1 15/16	2 3/16	2 5/16	2 5/16	2 1/8	1 3/4	1 1/4	11/16	0
A	1 3/4	1 7/8	1 7/8	1 3/4	1 9/16	1 1/4	7/8	9/16	1/4	0	-1/16	-1/16	0	1/16	1/8	3/16	1/4	3/16	1/8	1/16	0	-1/16	-1/16	0	1/4	5/8	1	1 3/8	1 3/4	2	2 1/8	2 1/8	1 15/16	1 9/16	1 1/8	5/8	0

NOTES:

SEE DES. SHT. 130 FOR DEFLECTION TABLE NOTES.

whks
engineers + planners + land surveyors

DESIGN FOR VARIABLE SKEW (L.A.)

2271'-6 x VARI. CONTINUOUS WELDED GIRDER BRIDGE-EBL W/14' BIKE TRAIL

138'-10 & 151'-0 7/8 END SPANS MULTIPLE LENGTH INTERIOR SPANS

DEFLECTION TABLES - UNIT 1

STA. 6792+60.93 - 52' LEFT ℄ I-74 OCTOBER, 2015

SCOTT COUNTY

IOWA DEPARTMENT OF TRANSPORTATION - HIGHWAY DIVISION

DESIGN SHEET NO. 131 OF 282 FILE NO. 30253 DESIGN NO. 3408

TOTAL DEAD LOAD DEFLECTION

BEAM							℄ BOLTED SPLICE 5			℄ PIER 19				℄ BOLTED SPLICE 6					℄ BOLTED SPLICE 7					℄ PIER 20			℄ BOLTED SPLICE 8										℄ BRG. PIER 21
LINE	LINE 207	LINE 208	LINE 209	LINE 210	LINE 211	LINE 212	LINE 213	LINE 214	LINE 215	LINE 216	LINE 217	LINE 218	LINE 219	LINE 220	LINE 221	LINE 222	LINE 223	LINE 224	LINE 225	LINE 226	LINE 227	LINE 228	LINE 229	LINE 230	LINE 231	LINE 232	LINE 233	LINE 234	LINE 235	LINE 236	LINE 237	LINE 238	LINE 239	LINE 240	LINE 241	LINE 242	LINE 243
P	$1\frac{13}{16}$	$1\frac{15}{16}$	$1\frac{15}{16}$	$1\frac{7}{8}$	$1\frac{5}{8}$	$1\frac{5}{16}$	1	$\frac{5}{8}$	$\frac{5}{16}$	0	$-\frac{1}{16}$	$-\frac{1}{16}$	0	$\frac{1}{8}$	$\frac{3}{16}$	$\frac{1}{4}$	$\frac{3}{16}$	$\frac{1}{16}$	$-\frac{1}{16}$	$-\frac{1}{8}$	$-\frac{3}{16}$	$-\frac{1}{8}$	$-\frac{1}{8}$	0	$\frac{3}{8}$	$\frac{3}{4}$	$1\frac{1}{4}$	$1\frac{13}{16}$	$2\frac{1}{4}$	$2\frac{5}{8}$	$2\frac{3}{4}$	$2\frac{3}{4}$	$2\frac{1}{2}$	$2\frac{1}{16}$	$1\frac{1}{2}$	$\frac{13}{16}$	0

																				S. END GIRDER N				℄ PIER 20			℄ BOLTED SPLICE 8										℄ BRG. PIER 21
																				LINE 172	LINE 173	LINE 174	LINE 175	LINE 176	LINE 177	LINE 178	LINE 179	LINE 180	LINE 181	LINE 182	LINE 183	LINE 184	LINE 185	LINE 186	LINE 187	LINE 188	LINE 189
N																				0	$-\frac{1}{8}$	$-\frac{3}{16}$	$-\frac{1}{8}$	0	$\frac{3}{8}$	$\frac{13}{16}$	$1\frac{5}{16}$	$1\frac{7}{8}$	$2\frac{3}{8}$	$2\frac{11}{16}$	$2\frac{7}{8}$	$2\frac{7}{8}$	$2\frac{5}{8}$	$2\frac{3}{16}$	$1\frac{9}{16}$	$\frac{13}{16}$	0

			S. END GIRDER M							℄ PIER 19				℄ BOLTED SPLICE 6					℄ BOLTED SPLICE 7					℄ PIER 20			℄ BOLTED SPLICE 8										℄ BRG. PIER 21
			LINE 137	LINE 138	LINE 139	LINE 140	LINE 141	LINE 142	LINE 143	LINE 144	LINE 145	LINE 146	LINE 147	LINE 148	LINE 149	LINE 150	LINE 151	LINE 152	LINE 153	LINE 154	LINE 155	LINE 156	LINE 157	LINE 158	LINE 159	LINE 160	LINE 161	LINE 162	LINE 163	LINE 164	LINE 165	LINE 166	LINE 167	LINE 168	LINE 169	LINE 170	LINE 171
M			$2\frac{3}{16}$	2	$1\frac{3}{4}$	$1\frac{7}{16}$	$1\frac{1}{16}$	$\frac{5}{8}$	$\frac{5}{16}$	0	$-\frac{1}{16}$	$-\frac{1}{16}$	0	$\frac{1}{8}$	$\frac{3}{16}$	$\frac{1}{4}$	$\frac{5}{16}$	$\frac{3}{16}$	$\frac{1}{16}$	0	$-\frac{1}{8}$	$-\frac{3}{16}$	$-\frac{1}{8}$	0	$\frac{3}{8}$	$\frac{13}{16}$	$1\frac{5}{16}$	$1\frac{15}{16}$	$2\frac{7}{16}$	$2\frac{3}{4}$	$2\frac{15}{16}$	$2\frac{15}{16}$	$2\frac{11}{16}$	$2\frac{1}{4}$	$1\frac{5}{8}$	$\frac{7}{8}$	0

							℄ BOLTED SPLICE 5			℄ PIER 19				℄ BOLTED SPLICE 6					℄ BOLTED SPLICE 7					℄ PIER 20			℄ BOLTED SPLICE 8										℄ BRG. PIER 21
	LINE 100	LINE 101	LINE 102	LINE 103	LINE 104	LINE 105	LINE 106	LINE 107	LINE 108	LINE 109	LINE 110	LINE 111	LINE 112	LINE 113	LINE 114	LINE 115	LINE 116	LINE 117	LINE 118	LINE 119	LINE 120	LINE 121	LINE 122	LINE 123	LINE 124	LINE 125	LINE 126	LINE 127	LINE 128	LINE 129	LINE 130	LINE 131	LINE 132	LINE 133	LINE 134	LINE 135	LINE 136
L	$2\frac{1}{8}$	$2\frac{1}{4}$	$2\frac{1}{4}$	$2\frac{1}{8}$	$1\frac{13}{16}$	$1\frac{7}{16}$	1	$\frac{5}{8}$	$\frac{5}{16}$	0	$-\frac{1}{16}$	$-\frac{1}{16}$	0	$\frac{1}{8}$	$\frac{3}{16}$	$\frac{1}{4}$	$\frac{5}{16}$	$\frac{1}{4}$	$\frac{1}{8}$	0	$-\frac{1}{8}$	$-\frac{3}{16}$	$-\frac{1}{8}$	0	$\frac{3}{8}$	$\frac{13}{16}$	$1\frac{5}{16}$	$1\frac{15}{16}$	$2\frac{1}{2}$	$2\frac{7}{8}$	$3\frac{1}{16}$	$3\frac{1}{16}$	$2\frac{13}{16}$	$2\frac{5}{16}$	$1\frac{11}{16}$	$\frac{7}{8}$	0

							℄ BOLTED SPLICE 5			℄ PIER 19				℄ BOLTED SPLICE 6						℄ BOLTED SPLICE 7				℄ PIER 20			℄ BOLTED SPLICE 8										℄ BRG. PIER 21
	LINE 38	LINE 39	LINE 40	LINE 41	LINE 42	LINE 43	LINE 44	LINE 45	LINE 46	LINE 47	LINE 48	LINE 49	LINE 50	LINE 51	LINE 52	LINE 53	LINE 54	LINE 55	LINE 56	LINE 57	LINE 58	LINE 59	LINE 60	LINE 61	LINE 62	LINE 63	LINE 64	LINE 65	LINE 66	LINE 67	LINE 68	LINE 69	LINE 70	LINE 71	LINE 72	LINE 73	LINE 74
K	$2\frac{5}{16}$	$2\frac{7}{16}$	$2\frac{7}{16}$	$2\frac{5}{16}$	$1\frac{15}{16}$	$1\frac{9}{16}$	$1\frac{1}{8}$	$\frac{11}{16}$	$\frac{5}{16}$	0	$-\frac{1}{16}$	$-\frac{1}{16}$	0	$\frac{1}{8}$	$\frac{3}{16}$	$\frac{1}{4}$	$\frac{5}{16}$	$\frac{1}{4}$	$\frac{3}{16}$	$\frac{1}{16}$	$-\frac{1}{16}$	$-\frac{1}{8}$	$-\frac{1}{8}$	0	$\frac{7}{16}$	$\frac{15}{16}$	$1\frac{1}{2}$	$2\frac{1}{8}$	$2\frac{5}{8}$	3	$3\frac{1}{8}$	$3\frac{1}{8}$	$2\frac{7}{8}$	$2\frac{3}{8}$	$1\frac{11}{16}$	$\frac{7}{8}$	0
J	$2\frac{9}{16}$	$2\frac{11}{16}$	$2\frac{11}{16}$	$2\frac{9}{16}$	$2\frac{3}{16}$	$1\frac{3}{4}$	$1\frac{1}{4}$	$\frac{3}{4}$	$\frac{3}{8}$	0	$-\frac{1}{8}$	$-\frac{1}{8}$	$-\frac{1}{16}$	$\frac{1}{16}$	$\frac{3}{16}$	$\frac{1}{4}$	$\frac{1}{4}$	$\frac{1}{4}$	$\frac{1}{8}$	$\frac{1}{16}$	$-\frac{1}{16}$	$-\frac{3}{16}$	$-\frac{1}{8}$	0	$\frac{7}{16}$	$\frac{15}{16}$	$1\frac{1}{2}$	$2\frac{3}{16}$	$2\frac{11}{16}$	$3\frac{1}{16}$	$3\frac{1}{4}$	$3\frac{1}{4}$	$2\frac{15}{16}$	$2\frac{7}{16}$	$1\frac{3}{4}$	$\frac{15}{16}$	0
H	$2\frac{3}{4}$	$2\frac{15}{16}$	$2\frac{15}{16}$	$2\frac{13}{16}$	$2\frac{3}{8}$	$1\frac{15}{16}$	$1\frac{3}{8}$	$\frac{13}{16}$	$\frac{3}{8}$	0	$-\frac{1}{8}$	$-\frac{3}{16}$	$-\frac{1}{8}$	0	$\frac{1}{8}$	$\frac{3}{16}$	$\frac{1}{4}$	$\frac{3}{16}$	$\frac{1}{8}$	$\frac{1}{16}$	$-\frac{1}{16}$	$-\frac{3}{16}$	$-\frac{1}{8}$	0	$\frac{7}{16}$	$\frac{15}{16}$	$1\frac{9}{16}$	$2\frac{1}{4}$	$2\frac{3}{4}$	$3\frac{1}{8}$	$3\frac{5}{16}$	$3\frac{5}{16}$	$3\frac{1}{16}$	$2\frac{1}{2}$	$1\frac{13}{16}$	$\frac{15}{16}$	0
G	$2\frac{5}{8}$	$2\frac{13}{16}$	$2\frac{13}{16}$	$2\frac{11}{16}$	$2\frac{5}{16}$	$1\frac{7}{8}$	$1\frac{5}{16}$	$\frac{13}{16}$	$\frac{3}{8}$	0	$-\frac{1}{8}$	$-\frac{1}{8}$	$-\frac{1}{16}$	0	$\frac{1}{8}$	$\frac{1}{4}$	$\frac{1}{4}$	$\frac{3}{16}$	$\frac{1}{8}$	0	$-\frac{1}{8}$	$-\frac{3}{16}$	$-\frac{1}{8}$	0	$\frac{7}{16}$	$\frac{15}{16}$	$1\frac{9}{16}$	$2\frac{1}{4}$	$2\frac{3}{4}$	$3\frac{3}{16}$	$3\frac{3}{8}$	$3\frac{3}{8}$	$3\frac{1}{16}$	$2\frac{9}{16}$	$1\frac{13}{16}$	$\frac{15}{16}$	0
F	$2\frac{5}{8}$	$2\frac{13}{16}$	$2\frac{13}{16}$	$2\frac{5}{8}$	$2\frac{5}{16}$	$1\frac{13}{16}$	$1\frac{5}{16}$	$\frac{3}{4}$	$\frac{3}{8}$	0	$-\frac{1}{8}$	$-\frac{1}{8}$	$-\frac{1}{16}$	$\frac{1}{16}$	$\frac{3}{16}$	$\frac{1}{4}$	$\frac{5}{16}$	$\frac{1}{4}$	$\frac{3}{16}$	$\frac{1}{16}$	$-\frac{1}{16}$	$-\frac{1}{8}$	$-\frac{1}{8}$	0	$\frac{7}{16}$	$\frac{15}{16}$	$1\frac{9}{16}$	$2\frac{3}{16}$	$2\frac{3}{4}$	$3\frac{1}{8}$	$3\frac{5}{16}$	$3\frac{5}{16}$	$3\frac{1}{16}$	$2\frac{1}{2}$	$1\frac{13}{16}$	$\frac{15}{16}$	0
E	$2\frac{9}{16}$	$2\frac{3}{4}$	$2\frac{3}{4}$	$2\frac{5}{8}$	$2\frac{1}{4}$	$1\frac{13}{16}$	$1\frac{5}{16}$	$\frac{3}{4}$	$\frac{3}{8}$	0	$-\frac{1}{8}$	$-\frac{1}{8}$	0	$\frac{1}{16}$	$\frac{3}{16}$	$\frac{5}{16}$	$\frac{5}{16}$	$\frac{1}{4}$	$\frac{3}{16}$	$\frac{1}{16}$	$-\frac{1}{16}$	$-\frac{1}{8}$	$-\frac{1}{8}$	0	$\frac{3}{8}$	$\frac{15}{16}$	$1\frac{1}{2}$	$2\frac{1}{8}$	$2\frac{11}{16}$	$3\frac{1}{16}$	$3\frac{1}{4}$	$3\frac{1}{4}$	3	$2\frac{7}{16}$	$1\frac{3}{4}$	$\frac{15}{16}$	0
D	$2\frac{1}{2}$	$2\frac{11}{16}$	$2\frac{11}{16}$	$2\frac{9}{16}$	$2\frac{1}{4}$	$1\frac{3}{4}$	$1\frac{1}{4}$	$\frac{3}{4}$	$\frac{3}{8}$	0	$-\frac{1}{16}$	$-\frac{1}{16}$	0	$\frac{1}{8}$	$\frac{1}{4}$	$\frac{5}{16}$	$\frac{3}{8}$	$\frac{5}{16}$	$\frac{1}{4}$	$\frac{1}{8}$	$-\frac{1}{16}$	$-\frac{1}{8}$	$-\frac{1}{16}$	0	$\frac{3}{8}$	$\frac{7}{8}$	$1\frac{1}{2}$	$2\frac{1}{16}$	$2\frac{5}{8}$	3	$3\frac{3}{16}$	$3\frac{3}{16}$	$2\frac{15}{16}$	$2\frac{7}{16}$	$1\frac{3}{4}$	$\frac{15}{16}$	0
C	$2\frac{7}{16}$	$2\frac{5}{8}$	$2\frac{5}{8}$	$2\frac{1}{2}$	$2\frac{3}{16}$	$1\frac{3}{4}$	$1\frac{1}{4}$	$\frac{3}{4}$	$\frac{3}{8}$	0	$-\frac{1}{16}$	$-\frac{1}{16}$	0	$\frac{1}{8}$	$\frac{1}{4}$	$\frac{5}{16}$	$\frac{3}{8}$	$\frac{5}{16}$	$\frac{1}{4}$	$\frac{1}{8}$	0	$-\frac{1}{16}$	$-\frac{1}{16}$	0	$\frac{3}{8}$	$\frac{7}{8}$	$1\frac{7}{16}$	2	$2\frac{1}{2}$	$2\frac{7}{8}$	$3\frac{1}{16}$	$3\frac{1}{16}$	$2\frac{13}{16}$	$2\frac{5}{16}$	$1\frac{11}{16}$	$\frac{7}{8}$	0
B	$2\frac{3}{8}$	$2\frac{1}{2}$	$2\frac{1}{2}$	$2\frac{3}{8}$	$2\frac{1}{16}$	$1\frac{5}{8}$	$1\frac{3}{16}$	$\frac{3}{4}$	$\frac{3}{8}$	0	$-\frac{1}{16}$	$-\frac{1}{16}$	0	$\frac{1}{8}$	$\frac{1}{4}$	$\frac{5}{16}$	$\frac{5}{16}$	$\frac{5}{16}$	$\frac{1}{4}$	$\frac{1}{8}$	0	$-\frac{1}{16}$	$-\frac{1}{16}$	0	$\frac{3}{8}$	$\frac{13}{16}$	$1\frac{3}{8}$	$1\frac{7}{8}$	$2\frac{3}{8}$	$2\frac{3}{4}$	$2\frac{7}{8}$	$2\frac{7}{8}$	$2\frac{5}{8}$	$2\frac{3}{16}$	$1\frac{9}{16}$	$\frac{13}{16}$	0
A	$2\frac{3}{16}$	$2\frac{3}{8}$	$2\frac{3}{8}$	$2\frac{1}{4}$	$1\frac{15}{16}$	$1\frac{9}{16}$	$1\frac{1}{8}$	$\frac{11}{16}$	$\frac{5}{16}$	0	$-\frac{1}{16}$	$-\frac{1}{16}$	0	$\frac{1}{8}$	$\frac{3}{16}$	$\frac{1}{4}$	$\frac{5}{16}$	$\frac{1}{4}$	$\frac{3}{16}$	$\frac{1}{8}$	0	$-\frac{1}{16}$	$-\frac{1}{16}$	0	$\frac{5}{16}$	$\frac{13}{16}$	$1\frac{5}{16}$	$1\frac{3}{4}$	$2\frac{1}{4}$	$2\frac{9}{16}$	$2\frac{11}{16}$	$2\frac{11}{16}$	$2\frac{7}{16}$	2	$1\frac{7}{16}$	$\frac{3}{4}$	0

NOTES:

SEE DES. SHT. 130 FOR DEFLECTION TABLE NOTES.

DESIGN FOR VARIABLE SKEW (L.A.)

2271'-6 x VARI. CONTINUOUS WELDED GIRDER BRIDGE-EBL W/14' BIKE TRAIL

138'-10 & 151'-0 7/8 END SPANS MULTIPLE LENGTH INTERIOR SPANS

DEFLECTION TABLES - UNIT 1

STA. 6792+60.93 - 52' LEFT ℄ I-74 OCTOBER, 2015

SCOTT COUNTY

IOWA DEPARTMENT OF TRANSPORTATION - HIGHWAY DIVISION

DESIGN SHEET NO. 132 OF 282 FILE NO. 30253 DESIGN NO. 3408

whks engineers + planners + land surveyors

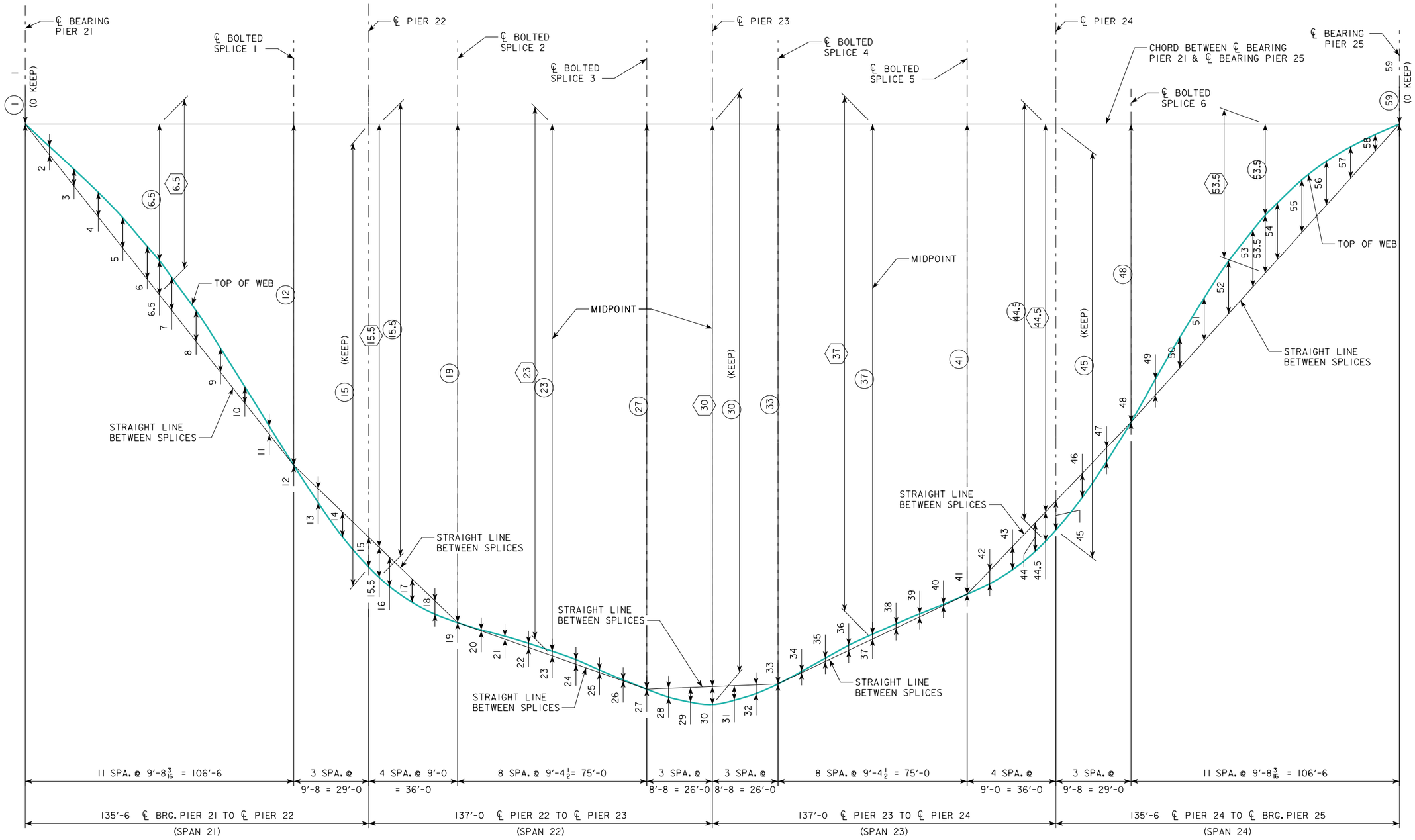

GIRDERS AS FABRICATED WITH WEBS HORIZONTAL DIAGRAM

NOTES:
LINE NUMBERS CORRESPOND TO THE HEXAGONAL NUMBERS SHOWN ON THE SLAB ELEVATION SHEET.

NUMBERS ENDING IN ".5" CORRESPOND TO THE MIDPOINT OF THE WEB SPLICE SECTION, NOT NECESSARILY THE MIDPOINT OF ADJACENT LINES.

WORK THIS SHEET WITH THE "SLAB ELEVATION PLAN" ON DES. SHT. 194 AND THE "GIRDER FABRICATION TABLE" ON DES. SHT. 135.

whks
engineers + planners + land surveyors

DESIGN FOR VARIABLE SKEW (L.A.)

2271'-6 x VARI. CONTINUOUS WELDED GIRDER BRIDGE-EBL W/14' BIKE TRAIL

138'-10 & 151'-0 7/8 END SPANS MULTIPLE LENGTH INTERIOR SPANS

GIRDER FABRICATION DIAGRAM-UNIT 2

STA. 6792+60.93 - 52' LEFT ℄ I-74 OCTOBER, 2015

SCOTT COUNTY

IOWA DEPARTMENT OF TRANSPORTATION - HIGHWAY DIVISION

DESIGN SHEET NO. 133 OF 282 FILE NO. 30253 DESIGN NO. 3408

DESIGN TEAM MG / BB / CF	SCOTT COUNTY	PROJECT NUMBER BRFIM-074-1(200)5--05-82	SHEET NUMBER 134

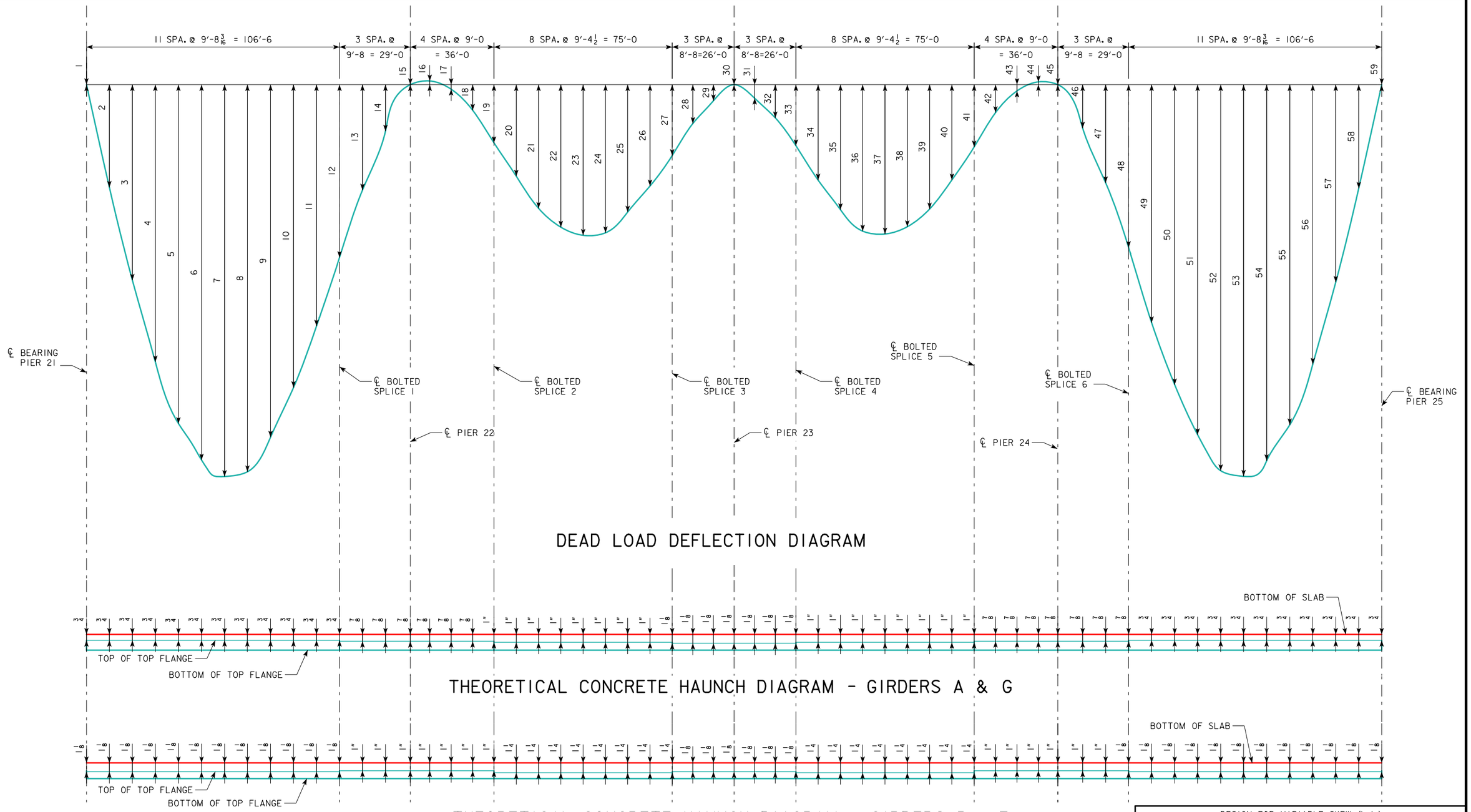

NOTES:

LINE NUMBERS CORRESPOND TO THE HEXAGONAL NUMBERS SHOWN ON THE SLAB ELEVATION SHEET.

WORK THIS SHEET WITH THE "SLAB ELEVATION PLAN" ON DESIGN SHEET 194 AND THE "DEAD LOAD DEFELCTION TABLES" ON DESIGN SHEET 136.

whks
engineers + planners + land surveyors

DESIGN FOR VARIABLE SKEW (L.A.)

2271'-6 x VARI. CONTINUOUS WELDED GIRDER BRIDGE-EBL W/14' BIKE TRAIL

138'-10 & 151'-0 7/8 END SPANS MULTIPLE LENGTH INTERIOR SPANS

DEFLECTION DIAGRAM-UNIT 2

STA. 6792+60.93 - 52' LEFT ℄ I-74 OCTOBER, 2015

SCOTT COUNTY

IOWA DEPARTMENT OF TRANSPORTATION - HIGHWAY DIVISION

DESIGN SHEET NO. 134 OF 282 FILE NO. 30253 DESIGN NO. 3408

GIRDERS AS FABRICATED WITH WEBS HORIZONTAL

BEAM LINE	℄ BEARING PIER 21															℄ BOLTED SPLICE 1				℄ PIER 22								℄ BOLTED SPLICE 2				
	1	(1)	LINE 2	LINE 3	LINE 4	LINE 5	LINE 6	6.5	(6.5)	⟨6.5⟩	LINE 7	LINE 8	LINE 9	LINE 10	LINE 11	12	(12)	LINE 13	LINE 14	15	(15)	15.5	(15.5)	⟨15.5⟩	LINE 16	LINE 17	LINE 18	19	(19)	LINE 20	LINE 21	LINE 22
G	0	0	3/8	11/16	1	1 1/4	1 3/8	1 7/16	-6 15/16	-8 5/16	1 3/8	1 5/16	1 1/16	11/16	3/8	0	-1'-4 11/16	-5/8	-1 1/8	-1 1/2	-1'-9 5/8	-1 7/16	-1'-10	-1'-8 9/16	-1 3/8	-1 1/16	-5/8	0	-2'-0 7/16	0	1/16	1/16
F	0	0	7/16	7/8	1 5/16	1 5/8	1 3/4	1 3/4	-6 1/2	-8 5/16	1 3/4	1 5/8	1 1/4	7/8	7/16	0	-1'-4 5/8	-11/16	-1 3/16	-1 9/16	-1'-9 5/8	-1 1/2	-1'-10	-1'-8 1/2	-1 7/16	-1 1/8	-5/8	0	-2'-0 3/8	0	1/8	3/16
E	0	0	1/2	1	1 1/2	1 13/16	1 15/16	2	-6 1/4	-8 1/4	1 15/16	1 13/16	1 7/16	15/16	7/16	0	-1'-4 9/16	-3/4	-1 1/4	-1 5/8	-1'-9 11/16	-1 9/16	-1'-10 1/16	-1'-8 1/2	-1 1/2	-1 3/16	-11/16	0	-2'-0 3/8	1/16	3/16	1/4
D	0	0	9/16	1 1/16	1 1/2	1 7/8	2	2 1/16	-6 3/16	-8 1/4	2	1 7/8	1 1/2	1	1/2	0	-1'-4 9/16	-3/4	-1 5/16	-1 5/8	-1'-9 11/16	-1 9/16	-1'-10 1/16	-1'-8 1/2	-1 1/2	-1 3/16	-11/16	0	-2'-0 7/16	1/16	3/16	1/4
C	0	0	1/2	1	1 7/16	1 13/16	1 15/16	2	-6 5/16	-8 5/16	1 15/16	1 13/16	1 7/16	15/16	7/16	0	-1'-4 9/16	-3/4	-1 5/16	-1 5/8	-1'-9 3/4	-1 9/16	-1'-10 1/8	-1'-8 9/16	-1 1/2	-1 3/16	-5/8	0	-2'-0 1/2	1/16	3/16	1/4
B	0	0	7/16	7/8	1 5/16	1 9/16	1 11/16	1 3/4	-6 9/16	-8 5/16	1 11/16	1 5/8	1 1/4	7/8	7/16	0	-1'-4 11/16	-11/16	-1 1/4	-1 9/16	-1'-9 3/4	-1 1/2	-1'-10 1/8	-1'-8 5/8	-1 7/16	-1 1/8	-5/8	0	-2'-0 9/16	0	1/8	3/16
A	0	0	3/8	11/16	1 1/16	1 5/16	1 3/8	1 7/16	-7	-8 7/16	1 3/8	1 5/16	1	11/16	3/8	0	-1'-4 13/16	-11/16	-1 3/16	-1 7/16	-1'-9 13/16	-1 7/16	-1'-10 3/16	-1'-8 3/4	-1 3/8	-1 1/16	-5/8	0	-2'-0 11/16	0	1/16	1/16

GIRDERS AS FABRICATED WITH WEBS HORIZONTAL

BEAM LINE							℄ BOLTED SPLICE 3				℄ PIER 23					℄ BOLTED SPLICE 4										℄ BOLTED SPLICE 5				
	23	(23)	⟨23⟩	LINE 24	LINE 25	LINE 26	27	(27)	LINE 28	LINE 29	30	(30)	⟨30⟩	LINE 31	LINE 32	33	(33)	LINE 34	LINE 35	LINE 36	37	(37)	⟨37⟩	LINE 38	LINE 39	LINE 40	41	(41)	LINE 42	LINE 43	LINE 44
G	1/8	-2'-1 15/16	-2'-2	1/8	1/16	0	0	-2'-3 5/8	-3/8	-5/8	-13/16	-2'-4 1/4	-2'-3 1/2	-5/8	-3/8	0	-2'-3 3/8	0	1/16	1/8	1/8	-2'-1 1/16	-2'-1 3/16	1/16	1/16	0	0	-1'-11	-5/8	-1 1/16	-1 5/16
F	3/16	-2'-1 13/16	-2'-2	3/16	1/8	1/16	0	-2'-3 5/8	-7/16	-11/16	-13/16	-2'-4 3/8	-2'-3 1/2	-11/16	-7/16	0	-2'-3 3/8	1/16	1/8	3/16	3/16	-2'-1	-2'-1 3/16	3/16	1/8	1/16	0	-1'-11	-5/8	-1 1/8	-1 7/16
E	1/4	-2'-1 3/4	-2'-2	1/4	1/8	1/16	0	-2'-3 5/8	-7/16	-3/4	-7/8	-2'-4 7/16	-2'-3 1/2	-11/16	-7/16	0	-2'-3 7/16	1/16	3/16	1/4	1/4	-2'-1	-2'-1 1/4	1/4	3/16	1/16	0	-1'-11 1/16	-11/16	-1 3/16	-1 7/16
D	1/4	-2'-1 13/16	-2'-2 1/16	1/4	1/8	1/16	0	-2'-3 11/16	-7/16	-3/4	-7/8	-2'-4 1/2	-2'-3 9/16	-11/16	-7/16	0	-2'-3 1/2	1/16	3/16	5/16	1/4	-2'-1	-2'-1 5/16	1/4	3/16	1/16	0	-1'-11 1/8	-11/16	-1 3/16	-1 1/2
C	1/4	-2'-1 7/8	-2'-2 1/8	1/4	1/8	1/16	0	-2'-3 3/4	-7/16	-11/16	-7/8	-2'-4 9/16	-2'-3 11/16	-11/16	-7/16	0	-2'-3 9/16	1/16	3/16	1/4	1/4	-2'-1 1/8	-2'-1 3/8	1/4	3/16	1/16	0	-1'-11 3/16	-5/8	-1 1/8	-1 7/16
B	3/16	-2'-2	-2'-2 3/16	3/16	1/8	1/16	0	-2'-3 7/8	-3/8	-11/16	-13/16	-2'-4 9/16	-2'-3 3/4	-11/16	-3/8	0	-2'-3 5/8	1/16	1/8	3/16	3/16	-2'-1 5/16	-2'-1 1/2	3/16	1/8	1/16	0	-1'-11 5/16	-5/8	-1 1/8	-1 3/8
A	1/8	-2'-2 1/4	-2'-2 5/16	1/8	1/16	0	0	-2'-4	-3/8	-5/8	-13/16	-2'-4 5/8	-2'-3 7/8	-5/8	-3/8	0	-2'-3 3/4	0	1/16	1/8	1/8	-2'-1 1/2	-2'-1 5/8	1/8	1/16	0	0	-1'-11 1/2	-9/16	-1 1/16	-1 5/16

GIRDERS AS FABRICATED WITH WEBS HORIZONTAL

BEAM LINE				℄ PIER 24				℄ BOLTED SPLICE 6																℄ BEARING PIER 25	
	44.5	(44.5)	⟨44.5⟩	45	(45)	LINE 46	LINE 47	48	(48)	LINE 49	LINE 50	LINE 51	LINE 52	LINE 53	53.5	(53.5)	⟨53.5⟩	LINE 54	LINE 55	LINE 56	LINE 57	LINE 58	59	(59)
G	-1 3/8	-1'-8 1/8	-1'-6 3/4	-1 7/16	-1'-7 11/16	-1 1/8	-5/8	0	-1'-2 1/2	3/4	1 7/16	1 15/16	2 3/8	2 9/16	2 5/8	-4 5/8	-7 1/4	2 9/16	2 3/8	2	1 7/16	3/4	0	0
F	-1 1/2	-1'-8 1/4	-1'-6 3/4	-1 1/2	-1'-7 13/16	-1 3/16	-11/16	0	-1'-2 1/2	13/16	1 9/16	2 3/16	2 11/16	2 7/8	2 15/16	-4 5/16	-7 1/4	2 7/8	2 11/16	2 1/4	1 5/8	7/8	0	0
E	-1 9/16	-1'-8 5/16	-1'-6 13/16	-1 9/16	-1'-7 15/16	-1 1/4	-11/16	0	-1'-2 1/2	7/8	1 5/8	2 5/16	2 7/8	3 1/16	3 3/16	-4 1/8	-7 1/4	3 1/8	2 7/8	2 7/16	1 3/4	15/16	0	0
D	-1 9/16	-1'-8 7/16	-1'-6 7/8	-1 5/8	-1'-8	-1 1/4	-3/4	0	-1'-2 5/8	7/8	1 5/8	2 3/8	2 15/16	3 3/16	3 1/4	-4 1/16	-7 5/16	3 3/16	2 15/16	2 1/2	1 3/4	15/16	0	0
C	-1 1/2	-1'-8 1/2	-1'-7	-1 9/16	-1'-8 1/8	-1 1/4	-3/4	0	-1'-2 3/4	13/16	1 9/16	2 1/4	2 13/16	3 1/16	3 1/8	-4 1/4	-7 3/8	3 1/16	2 7/8	2 7/16	1 3/4	15/16	0	0
B	-1 1/2	-1'-8 9/16	-1'-7 1/8	-1 1/2	-1'-8 3/16	-1 3/16	-11/16	0	-1'-2 15/16	3/4	1 7/16	2 1/8	2 5/8	2 13/16	2 7/8	-4 9/16	-7 7/16	2 7/8	2 11/16	2 1/4	1 5/8	7/8	0	0
A	-1 3/8	-1'-8 11/16	-1'-7 5/16	-1 7/16	-1'-8 1/4	-1 3/16	-11/16	0	-1'-3 1/16	5/8	1 1/4	1 7/8	2 5/16	2 1/2	2 9/16	-5	-7 9/16	2 1/2	2 5/16	1 15/16	1 3/8	3/4	0	0

NOTES:

LINE NUMBERS CORRESPOND TO THE HEXAGONAL NUMBERS SHOWN ON THE SLAB ELEVATIONS SHEET.

WORK THIS SHEET WITH THE "SLAB ELEVATION PLAN" ON DES. SHT. 194 AND THE "GIRDER FABRICATION DIAGRAM" ON DES. SHT. 133.

NUMBERS THAT ARE NOT ENCLOSED INDICATE DIMENSION FROM CHORD BETWEEN SPLICES TO TOP OF WEB.

ENCIRCLED NUMBERS INDICATE DIMENSION FROM CHORD BETWEEN GIRDER END BEARINGS TO TOP OF WEB.

HEXAGONAL NUMBERS INDICATE DIMENSION FROM CHORD BETWEEN GIRDER END BEARINGS TO CHORD BETWEEN SPLICES.

NEGATIVE CAMBER VALUES INDICATE THAT THE WEB IS CAMBERED DOWNWARD. NEGATIVE VALUES DO NOT INDICATE THAT THE CAMBER IS OPPOSITE OF THE SHAPE DEFINED BY THE "GIRDER FABRICATION DIAGRAM."

whks
engineers + planners + land surveyors

DESIGN FOR VARIABLE SKEW (L.A.)

2271'-6 x VARI. CONTINUOUS WELDED GIRDER BRIDGE-EBL W/14' BIKE TRAIL

138'-10 & 151'-0 7/8 END SPANS MULTIPLE LENGTH INTERIOR SPANS

GIRDER FABRICATION TABLE-UNIT 2

STA. 6792+60.93 - 52' LEFT ℄ I-74 OCTOBER, 2015

SCOTT COUNTY

IOWA DEPARTMENT OF TRANSPORTATION - HIGHWAY DIVISION

DESIGN SHEET NO. 135 OF 282 FILE NO. 30253 DESIGN NO. 3408

DEAD LOAD DEFLECTION DUE TO WEIGHT OF CONCRETE SLAB

BEAM LINE	℄ BEARING PIER 21											℄ BOLTED SPLICE 1			℄ PIER 22				℄ BOLTED SPLICE 2								℄ BOLTED SPLICE 3			℄ PIER 23			℄ BOLTED SPLICE 4		
	LINE 1	LINE 2	LINE 3	LINE 4	LINE 5	LINE 6	LINE 7	LINE 8	LINE 9	LINE 10	LINE 11	LINE 12	LINE 13	LINE 14	LINE 15	LINE 16	LINE 17	LINE 18	LINE 19	LINE 20	LINE 21	LINE 22	LINE 23	LINE 24	LINE 25	LINE 26	LINE 27	LINE 28	LINE 29	LINE 30	LINE 31	LINE 32	LINE 33	LINE 34	LINE 35
G	0	11/16	1 5/16	1 7/8	2 1/4	2 1/2	2 5/8	2 5/8	2 3/8	2 1/16	1 11/16	1 3/16	3/4	5/16	0	-1/16	0	1/8	3/8	9/16	3/4	7/8	15/16	15/16	13/16	5/8	7/16	1/4	1/8	0	1/16	3/16	3/8	5/8	13/16
F	0	13/16	1 1/2	2 1/8	2 5/8	2 7/8	3	2 15/16	2 11/16	2 5/16	1 13/16	1 5/16	13/16	3/8	0	0	0	3/16	7/16	11/16	7/8	1	1 1/16	1 1/16	15/16	3/4	1/2	1/4	1/8	0	1/8	1/4	7/16	11/16	7/8
E	0	7/8	1 5/8	2 5/16	2 13/16	3 1/8	3 1/4	3 3/16	2 7/8	2 7/16	1 15/16	1 3/8	13/16	3/8	0	0	1/16	3/16	7/16	11/16	15/16	1 1/8	1 3/16	1 1/8	1	13/16	9/16	5/16	1/8	0	1/8	1/4	7/16	3/4	1
D	0	7/8	1 11/16	2 3/8	2 7/8	3 3/16	3 5/16	3 1/4	2 15/16	2 1/2	2	1 7/16	7/8	3/8	0	-1/16	1/16	3/16	7/16	11/16	1	1 1/8	1 3/16	1 3/16	1	13/16	9/16	5/16	1/8	0	1/8	1/4	1/2	3/4	1
C	0	7/8	1 5/8	2 5/16	2 13/16	3 1/8	3 1/4	3 3/16	2 7/8	2 1/2	1 15/16	1 3/8	13/16	3/8	0	-1/16	1/16	3/16	7/16	11/16	15/16	1 1/8	1 3/16	1 1/8	1	13/16	9/16	5/16	1/8	0	1/8	1/4	7/16	3/4	1
B	0	13/16	1 1/2	2 1/8	2 5/8	2 7/8	3	3	2 11/16	2 5/16	1 7/8	1 5/16	13/16	5/16	0	0	0	3/16	3/8	5/8	7/8	1	1 1/16	1 1/16	15/16	3/4	1/2	1/4	1/8	0	1/8	1/4	7/16	11/16	15/16
A	0	11/16	1 5/16	1 7/8	2 5/16	2 1/2	2 5/8	2 5/8	2 3/8	2 1/16	1 11/16	1 3/16	3/4	5/16	0	-1/16	0	3/16	3/8	9/16	3/4	7/8	15/16	15/16	13/16	5/8	7/16	1/4	1/8	0	1/16	3/16	3/8	5/8	13/16

TOTAL DEAD LOAD DEFLECTION

BEAM LINE	℄ BEARING PIER 21											℄ BOLTED SPLICE 1			℄ PIER 22				℄ BOLTED SPLICE 2								℄ BOLTED SPLICE 3			℄ PIER 23			℄ BOLTED SPLICE 4		
	LINE 1	LINE 2	LINE 3	LINE 4	LINE 5	LINE 6	LINE 7	LINE 8	LINE 9	LINE 10	LINE 11	LINE 12	LINE 13	LINE 14	LINE 15	LINE 16	LINE 17	LINE 18	LINE 19	LINE 20	LINE 21	LINE 22	LINE 23	LINE 24	LINE 25	LINE 26	LINE 27	LINE 28	LINE 29	LINE 30	LINE 31	LINE 32	LINE 33	LINE 34	LINE 35
G	0	7/8	1 11/16	2 3/8	2 7/8	3 1/4	3 3/8	3 3/8	3 1/16	2 11/16	2 1/8	1 9/16	15/16	7/16	0	-1/16	0	1/8	7/16	11/16	15/16	1 1/8	1 3/16	1 1/8	1	13/16	9/16	5/16	1/8	0	1/8	1/4	1/2	3/4	15/16
F	0	1	1 7/8	2 11/16	3 1/4	3 5/8	3 3/4	3 11/16	3 3/8	2 7/8	2 5/16	1 5/8	1	7/16	0	-1/16	0	3/16	1/2	3/4	1 1/16	1 1/4	1 5/16	1 5/16	1 1/8	7/8	5/8	5/16	1/8	0	1/8	5/16	1/2	13/16	1 1/16
E	0	1 1/16	2	2 7/8	3 1/2	3 7/8	4	3 15/16	3 9/16	3 1/16	2 7/16	1 3/4	1 1/16	7/16	0	-1/16	0	1/4	1/2	13/16	1 1/8	1 5/16	1 3/8	1 3/8	1 3/16	15/16	5/8	3/8	1/8	0	1/8	5/16	9/16	7/8	1 3/16
D	0	1 1/8	2 1/16	2 15/16	3 9/16	3 15/16	4 1/8	4 1/16	3 11/16	3 1/8	2 7/16	1 3/4	1 1/16	7/16	0	-1/16	0	1/4	1/2	13/16	1 1/8	1 3/16	1 3/8	1 7/16	1 3/8	1 3/16	15/16	3/8	1/8	0	1/8	5/16	9/16	7/8	1 3/16
C	0	1 1/16	2	2 7/8	3 1/2	3 7/8	4	4	3 5/8	3 1/16	2 7/16	1 3/4	1 1/16	7/16	0	-1/16	0	1/4	1/2	13/16	1 1/8	1 5/16	1 3/8	1 3/8	1 3/16	15/16	5/8	3/8	1/8	0	1/8	5/16	9/16	7/8	1 3/16
B	0	1	1 7/8	2 5/8	3 1/4	3 5/8	3 3/4	3 3/4	3 3/8	2 15/16	2 5/16	1 11/16	1	7/16	0	-1/16	0	3/16	7/16	3/4	1 1/16	1 1/4	1 5/16	1 1/4	1 1/8	7/8	5/8	5/16	1/8	0	1/8	5/16	1/2	13/16	1 1/8
A	0	7/8	1 11/16	2 3/8	2 15/16	3 1/4	3 3/8	3 3/8	3 1/16	2 11/16	2 1/8	1 9/16	15/16	7/16	0	-1/16	0	3/16	7/16	11/16	15/16	1 1/16	1 1/8	1 1/8	1	3/4	9/16	5/16	1/8	0	1/8	1/4	1/2	3/4	1

DEAD LOAD DEFLECTION DUE TO WEIGHT OF CONCRETE SLAB

BEAM LINE						℄ BOLTED SPLICE 5				℄ PIER 24			℄ BOLTED SPLICE 6											℄ BEARING PIER 25
	LINE 36	LINE 37	LINE 38	LINE 39	LINE 40	LINE 41	LINE 42	LINE 43	LINE 44	LINE 45	LINE 46	LINE 47	LINE 48	LINE 49	LINE 50	LINE 51	LINE 52	LINE 53	LINE 54	LINE 55	LINE 56	LINE 57	LINE 58	LINE 59
G	15/16	15/16	7/8	3/4	5/8	3/8	3/16	0	0	0	5/16	11/16	1 1/8	1 5/8	2 1/16	2 3/8	2 5/8	2 5/8	2 9/16	2 5/16	1 7/8	1 5/16	11/16	0
F	1 1/16	1 1/16	1	7/8	11/16	7/16	3/16	1/16	0	0	5/16	3/4	1 1/4	1 13/16	2 5/16	2 11/16	2 15/16	3	2 7/8	2 5/8	2 1/8	1 1/2	13/16	0
E	1 1/8	1 3/16	1 1/8	1	3/4	1/2	1/4	1/16	0	0	5/16	3/4	1 5/16	1 15/16	2 7/16	2 7/8	3 3/16	3 1/4	3 1/8	2 13/16	2 5/16	1 5/8	7/8	0
D	1 3/16	1 3/16	1 1/8	1	3/4	1/2	1/4	1/16	0	0	5/16	13/16	1 5/16	1 15/16	2 1/2	2 15/16	3 1/4	3 5/16	3 3/16	2 15/16	2 3/8	1 11/16	7/8	0
C	1 1/8	1 3/16	1 1/8	1	3/4	1/2	1/4	1/16	0	0	5/16	3/4	1 5/16	1 7/8	2 7/16	2 7/8	3 3/16	3 1/4	3 1/8	2 13/16	2 5/16	1 5/8	7/8	0
B	1 1/16	1 1/16	1 1/16	15/16	11/16	7/16	1/4	1/16	0	0	5/16	11/16	1 3/16	1 3/4	2 1/4	2 5/8	2 15/16	3	2 7/8	2 5/8	2 1/8	1 1/2	13/16	0
A	15/16	15/16	15/16	13/16	5/8	3/8	3/16	1/16	0	0	5/16	11/16	1 1/8	1 5/8	2	2 3/8	2 5/8	2 5/8	2 1/2	2 1/4	1 7/8	1 5/16	11/16	0

TOTAL DEAD LOAD DEFLECTION

BEAM LINE						℄ BOLTED SPLICE 5				℄ PIER 24			℄ BOLTED SPLICE 6											℄ BEARING PIER 25
	LINE 36	LINE 37	LINE 38	LINE 39	LINE 40	LINE 41	LINE 42	LINE 43	LINE 44	LINE 45	LINE 46	LINE 47	LINE 48	LINE 49	LINE 50	LINE 51	LINE 52	LINE 53	LINE 54	LINE 55	LINE 56	LINE 57	LINE 58	LINE 59
G	1 1/8	1 1/8	1 1/16	15/16	3/4	7/16	3/16	0	-1/16	0	3/8	7/8	1 7/16	2 1/8	2 5/8	3 1/16	3 5/16	3 3/8	3 1/4	2 15/16	2 3/8	1 11/16	7/8	0
F	1 1/4	1 5/16	1 1/4	1 1/16	13/16	1/2	3/16	0	-1/16	0	7/16	15/16	1 9/16	2 1/4	2 7/8	3 3/8	3 11/16	3 3/4	3 5/8	3 1/4	2 11/16	1 7/8	1	0
E	1 3/8	1 3/8	1 5/16	1 1/8	7/8	9/16	1/4	1/16	-1/16	0	7/16	1	1 5/8	2 3/8	3 1/16	3 9/16	3 15/16	4	3 7/8	3 1/2	2 7/8	2 1/16	1 1/16	0
D	1 3/8	1 7/16	1 3/8	1 3/16	7/8	9/16	1/4	1/16	0	0	7/16	1	1 5/8	2 7/16	3 1/16	3 5/8	4 1/16	4 1/8	3 15/16	3 5/8	2 15/16	2 1/16	1 1/8	0
C	1 3/8	1 3/8	1 5/16	1 3/16	7/8	9/16	5/16	1/16	0	0	7/16	15/16	1 5/8	2 3/8	3	3 9/16	3 15/16	4	3 7/8	3 1/2	2 7/8	2 1/16	1 1/16	0
B	1 1/4	1 5/16	1 1/4	1 1/8	13/16	9/16	1/4	1/16	0	0	3/8	15/16	1 9/16	2 1/4	2 13/16	3 5/16	3 11/16	3 3/4	3 5/8	3 1/4	2 11/16	1 15/16	1	0
A	1 1/8	1 3/16	1 1/8	1	3/4	1/2	1/4	1/16	-1/16	0	3/8	7/8	1 7/16	2 1/16	2 5/8	3 1/16	3 3/8	3 3/8	3 1/4	2 15/16	2 3/8	1 11/16	7/8	0

NOTES:
LINE NUMBERS CORRESPOND TO THE HEXAGONAL NUMBERS SHOWN ON THE SLAB ELEVATION SHEET.

WORK THIS SHEET WITH THE "SLAB ELEVATION PLAN" ON DESIGN SHEET 194 AND THE "DEFLECTION DIAGRAM" ON DESIGN SHEET 134.

NEGATIVE NUMBERS INDICATE UPWARD DEFLECTION. NEGATIVE VALUES DO NOT INDICATE THAT THE DEFLECTION IS OPPOSITE OF THE SHAPE DEFINED BY THE "DEAD LOAD DEFLECTION DIAGRAM."

whks
engineers + planners + land surveyors

DESIGN FOR VARIABLE SKEW (L.A.)

2271'-6 x VARI. CONTINUOUS WELDED GIRDER BRIDGE-EBL W/14' BIKE TRAIL

138'-10 & 151'-0 7/8 END SPANS MULTIPLE LENGTH INTERIOR SPANS

DEFLECTION TABLES - UNIT 2

STA. 6792+60.93 - 52' LEFT ℄ I-74 OCTOBER, 2015

SCOTT COUNTY

IOWA DEPARTMENT OF TRANSPORTATION - HIGHWAY DIVISION

DESIGN SHEET NO. 136 OF 282 FILE NO. 30253 DESIGN NO. 3408

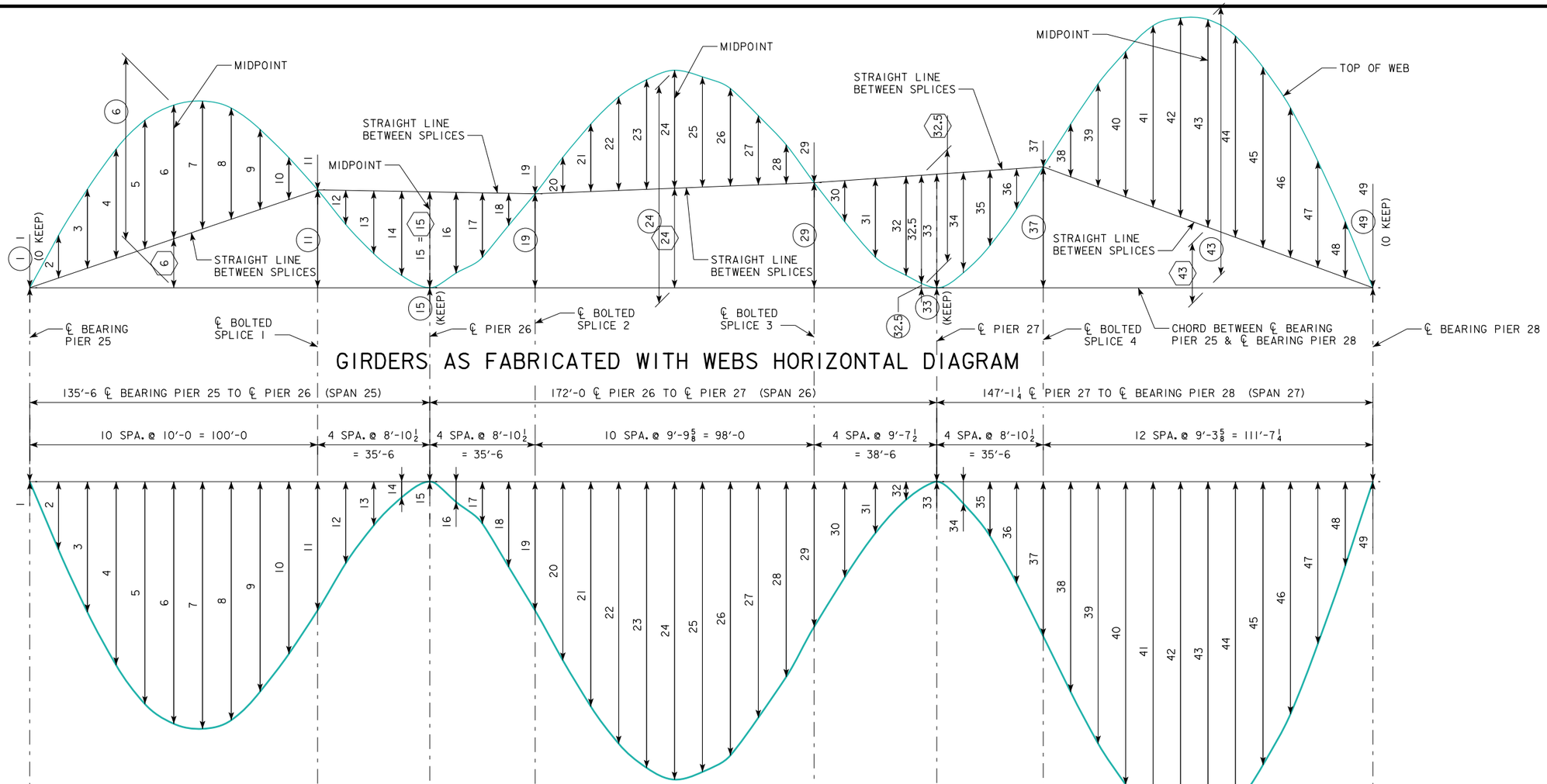

GIRDERS AS FABRICATED WITH WEBS HORIZONTAL DIAGRAM

DEAD LOAD DEFLECTION DIAGRAM

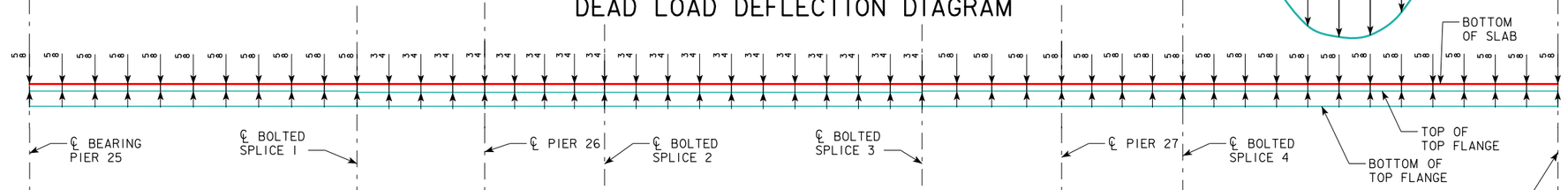

THEORETICAL CONCRETE HAUNCH DIAGRAM - GIRDERS A & G

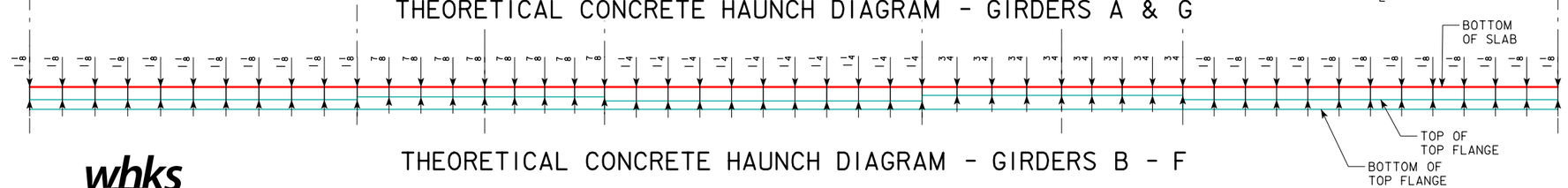

THEORETICAL CONCRETE HAUNCH DIAGRAM - GIRDERS B - F

NOTES:
LINE NUMBERS CORRESPOND TO THE HEXAGONAL NUMBERS SHOWN ON THE SLAB ELEVATION SHEET.

NUMBERS ENDING IN ".5" CORRESPOND TO THE MIDPOINT OF THE WEB SPLICE SECTION, NOT NECESSARILY THE MIDPOINT OF ADJACENT LINES.

WORK THIS SHEET WITH THE "SLAB ELEVATION PLAN" ON DES. SHT. 195 AND THE "GIRDER FABRICATION TABLE" ON DES. SHT. 138 AND THE "DEAD LOAD DEFLECTION TABLES" ON DES. SHT. 139.

whks
engineers + planners + land surveyors

DESIGN FOR VARIABLE SKEW (L.A.)

2271'-6 x VARI. CONTINUOUS WELDED GIRDER BRIDGE-EBL W/14' BIKE TRAIL

138'-10 & 151'-0⅞ END SPANS MULTIPLE LENGTH INTERIOR SPANS

FABRIC. & DEFL. DIAGRAMS - UNIT 3

STA. 6792+60.93 - 52' LEFT ℄ I-74 OCTOBER, 2015

SCOTT COUNTY

IOWA DEPARTMENT OF TRANSPORTATION - HIGHWAY DIVISION

DESIGN SHEET NO. 137 OF 282 FILE NO. 30253 DESIGN NO. 3408

DESIGN TEAM MG / BB / CF | SCOTT COUNTY | PROJECT NUMBER BRFIM-074-1(200)5--05-82 | SHEET NUMBER 138

GIRDERS AS FABRICATED WITH WEBS HORIZONTAL

BEAM LINE	℄ BEARING PIER 25												℄ BOLTED SPLICE 1					℄ PIER 26						℄ BOLTED SPLICE 2								
	1	(1)	LINE 2	LINE 3	LINE 4	LINE 5	6	(6)	⟨6⟩	LINE 7	LINE 8	LINE 9	LINE 10	11	(11)	LINE 12	LINE 13	LINE 14	15	(15)	⟨15⟩	LINE 16	LINE 17	LINE 18	19	(19)	LINE 20	LINE 21	LINE 22	LINE 23	24	(24)	⟨24⟩	LINE 25
G	0	0	9/16	1 1/16	1 7/16	1 3/4	1 3/4	2 5/16	9/16	1 11/16	1 7/16	1 1/16	9/16	0	1 1/8	-7/16	-3/4	-1	-1 3/16	0	1 3/16	-1	-3/4	-3/8	0	1 1/4	1/2	15/16	1 1/4	1 1/2	1 9/16	2 13/16	1 3/16	1 7/16
F	0	0	11/16	1 1/4	1 11/16	2	2 1/16	2 11/16	5/8	1 15/16	1 11/16	1 1/4	5/8	0	1 1/4	-1/2	-13/16	-1 1/8	-1 5/16	0	1 5/16	-1 1/8	-7/8	-7/16	0	1 5/16	9/16	1 1/16	1 7/16	1 11/16	1 13/16	3 1/8	1 5/16	1 11/16
E	0	0	3/4	1 3/8	1 13/16	2 3/16	2 1/4	2 15/16	11/16	2 1/8	1 13/16	1 5/16	11/16	0	1 3/8	-1/2	-7/8	-1 3/16	-1 3/8	0	1 3/8	-1 3/16	-15/16	-1/2	0	1 7/16	9/16	1 1/8	1 9/16	1 13/16	1 15/16	3 3/16	1 7/16	1 13/16
D	0	0	3/4	1 3/8	1 7/8	2 1/4	2 5/16	3 1/16	3/4	2 3/16	1 7/8	1 3/8	11/16	0	1 7/16	-1/2	-15/16	-1 1/4	-1 7/16	0	1 7/16	-1 3/16	-15/16	-1/2	0	1 7/16	5/8	1 1/8	1 5/8	1 7/8	2	3 7/16	1 7/16	1 13/16
C	0	0	3/4	1 3/8	1 13/16	2 3/16	2 1/4	2 15/16	11/16	2 1/8	1 13/16	1 3/8	11/16	0	1 3/8	-1/2	-15/16	-1 1/4	-1 3/8	0	1 3/8	-1 3/16	-15/16	-1/2	0	1 7/16	9/16	1 1/8	1 9/16	1 13/16	1 15/16	3 3/8	1 7/16	1 13/16
B	0	0	11/16	1 1/4	1 11/16	2	2 1/16	2 11/16	5/8	1 15/16	1 11/16	1 1/4	5/8	0	1 1/4	-7/16	-7/8	-1 1/8	-1 5/16	0	1 5/16	-1 1/8	-7/8	-7/16	0	1 3/8	9/16	1 1/16	1 7/16	1 11/16	1 13/16	3 3/16	1 3/8	1 11/16
A	0	0	9/16	1 1/16	1 7/16	1 11/16	1 3/4	2 5/16	9/16	1 11/16	1 7/16	1 1/16	9/16	0	1 1/8	-3/8	-13/16	-1 1/16	-1 3/16	0	1 3/16	-1	-13/16	-3/8	0	1 1/4	1/2	15/16	1 5/16	1 1/2	1 9/16	2 7/8	1 1/4	1 1/2

GIRDERS AS FABRICATED WITH WEBS HORIZONTAL

BEAM LINE				℄ BOLTED SPLICE 3								℄ PIER 27					℄ BOLTED SPLICE 4																℄ BEARING PIER 28	
	LINE 26	LINE 27	LINE 28	29	(29)	LINE 30	LINE 31	LINE 32	32.5	(32.5)	⟨32.5⟩	33	(33)	LINE 34	LINE 35	LINE 36	37	(37)	LINE 38	LINE 39	LINE 40	LINE 41	LINE 42	43	(43)	⟨43⟩	LINE 44	LINE 45	LINE 46	LINE 47	LINE 48	49	(49)
G	1 5/16	7/8	1/2	0	1 3/16	-1/2	-15/16	-1 3/16	-1 3/8	0	1 3/8	-1 3/8	0	-1 3/16	-7/8	-1/2	0	1 9/16	3/4	1 3/8	1 15/16	2 7/16	2 11/16	2 13/16	3 9/16	13/16	2 11/16	2 7/16	2	1 7/16	3/4	0	0
F	1 7/16	1	9/16	0	1 5/16	-9/16	-1 1/16	-1 5/16	-1 1/2	0	1 1/2	-1 1/2	0	-1 5/16	-1	-9/16	0	1 11/16	13/16	1 1/2	2 1/8	2 11/16	2 15/16	3 1/16	3 15/16	7/8	3	2 11/16	2 1/4	1 9/16	13/16	0	0
E	1 9/16	1 1/16	9/16	0	1 7/16	-9/16	-1 1/8	-1 3/8	-1 9/16	0	1 5/8	-1 5/8	0	-1 3/8	-1 1/16	-9/16	0	1 13/16	7/8	1 5/8	2 1/4	2 13/16	3 1/8	3 1/4	4 3/16	7/8	3 3/16	2 7/8	2 3/8	1 11/16	7/8	0	0
D	1 5/8	1 1/8	5/8	0	1 1/2	-9/16	-1 1/8	-1 7/16	-1 5/8	0	1 5/8	-1 5/8	0	-1 7/16	-1 1/8	-5/8	0	1 13/16	7/8	1 5/8	2 5/16	2 7/8	3 3/16	3 3/8	4 1/4	7/8	3 1/4	2 15/16	2 7/16	1 11/16	7/8	0	0
C	1 9/16	1 1/8	5/8	0	1 1/2	-9/16	-1 1/16	-1 3/8	-1 9/16	0	1 5/8	-1 5/8	0	-1 3/8	-1 1/16	-9/16	0	1 3/4	13/16	1 9/16	2 1/4	2 13/16	3 1/8	3 5/16	4 1/8	7/8	3 3/16	2 7/8	2 3/8	1 11/16	7/8	0	0
B	1 7/16	1 1/16	9/16	0	1 3/8	-1/2	-1	-1 5/16	-1 1/2	0	1 1/2	-1 1/2	0	-1 5/16	-1	-9/16	0	1 5/8	3/4	1 1/2	2 1/8	2 11/16	2 15/16	3 1/16	3 7/8	13/16	3	2 11/16	2 1/4	1 9/16	13/16	0	0
A	1 5/16	15/16	1/2	0	1 1/4	-1/2	-15/16	-1 3/16	-1 3/8	0	1 3/8	-1 3/8	0	-1 3/16	-15/16	-1/2	0	1 1/2	11/16	1 3/8	1 15/16	2 7/16	2 5/8	2 3/4	3 1/2	3/4	2 11/16	2 3/8	2	1 7/16	3/4	0	0

NOTES:

LINE NUMBERS CORRESPOND TO THE HEXAGONAL NUMBERS SHOWN ON THE SLAB ELEVATIONS SHEET.

WORK THIS SHEET WITH THE "SLAB ELEVATION PLAN" ON DESIGN SHEET 195 AND THE "GIRDER FABRICATION DIAGRAM" ON DESIGN SHEET 137.

NUMBERS THAT ARE NOT ENCLOSED INDICATE DIMENSION FROM CHORD BETWEEN SPLICES TO TOP OF WEB.

ENCIRCLED NUMBERS INDICATE DIMENSION FROM CHORD BETWEEN GIRDER END BEARINGS TO TOP OF WEB.

HEXAGONAL NUMBERS INDICATE DIMENSION FROM CHORD BETWEEN GIRDER END BEARINGS TO CHORD BETWEEN SPLICES.

NEGATIVE CAMBER VALUES INDICATE THAT THE WEB IS CAMBERED DOWNWARD. NEGATIVE VALUES DO NOT INDICATE THAT THE CAMBER IS OPPOSITE OF THE SHAPE DEFINED BY THE "GIRDER FABRICATION DIAGRAM."

whks
engineers + planners + land surveyors

DESIGN FOR VARIABLE SKEW (L.A.)

2271'-6 x VARI. CONTINUOUS WELDED GIRDER BRIDGE-EBL W/14' BIKE TRAIL

138'-10 & 151'-0 7/8 END SPANS MULTIPLE LENGTH INTERIOR SPANS

GIRDER FABRICATION TABLE-UNIT 3

STA. 6792+60.93 - 52' LEFT ℄ I-74 OCTOBER, 2015

SCOTT COUNTY

IOWA DEPARTMENT OF TRANSPORTATION - HIGHWAY DIVISION

DESIGN SHEET NO. 138 OF 282 FILE NO. 30253 DESIGN NO. 3408

DEAD LOAD DEFLECTION DUE TO WEIGHT OF CONCRETE SLAB

BEAM LINE	℄ BEARING PIER 25										℄ BOLTED SPLICE 1				℄ PIER 26				℄ BOLTED SPLICE 2							
	LINE 1	LINE 2	LINE 3	LINE 4	LINE 5	LINE 6	LINE 7	LINE 8	LINE 9	LINE 10	LINE 11	LINE 12	LINE 13	LINE 14	LINE 15	LINE 16	LINE 17	LINE 18	LINE 19	LINE 20	LINE 21	LINE 22	LINE 23	LINE 24	LINE 25	LINE 26
G	0	9/16	1	1 3/8	1 11/16	1 7/8	1 7/8	1 13/16	1 9/16	1 1/4	15/16	9/16	5/16	1/8	0	1/8	5/16	5/8	7/8	1 1/4	1 5/8	1 7/8	2	2 1/8	2	1 7/8
F	0	5/8	1 3/16	1 11/16	2 1/16	2 3/16	2 3/16	2 1/16	1 13/16	1 7/16	1 1/16	11/16	3/8	3/16	0	3/16	5/16	11/16	1	1 7/16	1 13/16	2 1/8	2 5/16	2 7/16	2 5/16	2 1/8
E	0	11/16	1 5/16	1 7/8	2 1/4	2 7/16	2 7/16	2 5/16	2	1 5/8	1 1/8	3/4	7/16	3/16	0	3/16	3/8	3/4	1 1/8	1 9/16	2	2 3/8	2 9/16	2 5/8	2 9/16	2 3/8
D	0	3/4	1 3/8	1 7/8	2 5/16	2 1/2	2 1/2	2 3/8	2 1/8	1 11/16	1 3/16	13/16	7/16	3/16	0	3/16	3/8	3/4	1 1/8	1 5/8	2 1/16	2 7/16	2 5/8	2 3/4	2 5/8	2 7/16
C	0	11/16	1 5/16	1 13/16	2 1/4	2 7/16	2 7/16	2 5/16	2 1/16	1 5/8	1 3/16	3/4	7/16	3/16	0	3/16	3/8	11/16	1 1/16	1 9/16	2	2 5/16	2 9/16	2 11/16	2 9/16	2 3/8
B	0	5/8	1 3/16	1 11/16	2	2 3/16	2 1/4	2 1/8	1 7/8	1 7/16	1 1/16	11/16	3/8	1/8	0	3/16	5/16	11/16	1	1 7/16	1 13/16	2 1/8	2 3/8	2 7/16	2 3/8	2 3/16
A	0	9/16	1 1/16	1 7/16	1 11/16	1 7/8	1 7/8	1 13/16	1 9/16	1 1/4	15/16	5/8	5/16	1/8	0	1/8	5/16	5/8	15/16	1 5/16	1 5/8	1 7/8	2 1/16	2 1/8	2 1/16	1 15/16

TOTAL DEAD LOAD DEFLECTION

BEAM LINE	℄ BEARING PIER 25										℄ BOLTED SPLICE 1				℄ PIER 26				℄ BOLTED SPLICE 2							
	LINE 1	LINE 2	LINE 3	LINE 4	LINE 5	LINE 6	LINE 7	LINE 8	LINE 9	LINE 10	LINE 11	LINE 12	LINE 13	LINE 14	LINE 15	LINE 16	LINE 17	LINE 18	LINE 19	LINE 20	LINE 21	LINE 22	LINE 23	LINE 24	LINE 25	LINE 26
G	0	11/16	1 1/4	1 3/4	2 3/16	2 5/16	2 3/8	2 1/4	1 15/16	1 9/16	1 1/8	11/16	7/16	3/16	0	3/16	7/16	13/16	1 1/4	1 11/16	2 1/8	2 1/2	2 11/16	2 13/16	2 11/16	2 1/2
F	0	13/16	1 1/2	2 1/16	2 1/2	2 11/16	2 11/16	2 9/16	2 1/4	1 13/16	1 1/4	13/16	7/16	3/16	0	1/4	7/16	7/8	1 5/16	1 7/8	2 3/8	2 3/4	3	3 1/8	3	2 3/4
E	0	7/8	1 5/8	2 1/4	2 3/4	2 15/16	3	2 13/16	2 7/16	1 15/16	1 3/8	7/8	1/2	3/16	0	1/4	1/2	15/16	1 7/16	2	2 9/16	3	3 1/4	3 3/8	3 3/16	3
D	0	7/8	1 11/16	2 5/16	2 13/16	3 1/16	3 1/16	2 7/8	2 9/16	2	1 7/16	15/16	1/2	3/16	0	1/4	1/2	15/16	1 7/16	2 1/16	2 9/16	3 1/16	3 5/16	3 7/16	3 5/16	3 1/16
C	0	7/8	1 5/8	2 1/4	2 3/4	2 15/16	3	2 13/16	2 1/2	1 15/16	1 3/8	15/16	1/2	3/16	0	1/4	7/16	15/16	1 7/16	2	2 9/16	3	3 1/4	3 3/8	3 1/4	3
B	0	13/16	1 1/2	2 1/16	2 1/2	2 11/16	2 3/4	2 9/16	2 1/4	1 3/4	1 1/4	7/8	7/16	3/16	0	1/4	7/16	7/8	1 3/8	1 7/8	2 3/8	2 13/16	3 1/16	3 3/16	3 1/16	2 7/8
A	0	11/16	1 5/16	1 13/16	2 1/8	2 5/16	2 3/8	2 1/4	1 15/16	1 9/16	1 1/8	3/4	3/8	1/8	0	3/16	7/16	7/8	1 1/4	1 3/4	2 3/16	2 9/16	2 3/4	2 7/8	2 3/4	2 9/16

DEAD LOAD DEFLECTION DUE TO WEIGHT OF CONCRETE SLAB

BEAM LINE			℄ BOLTED SPLICE 3				℄ PIER 27				℄ BOLTED SPLICE 4												℄ BEARING PIER 28
	LINE 27	LINE 28	LINE 29	LINE 30	LINE 31	LINE 32	LINE 33	LINE 34	LINE 35	LINE 36	LINE 37	LINE 38	LINE 39	LINE 40	LINE 41	LINE 42	LINE 43	LINE 44	LINE 45	LINE 46	LINE 47	LINE 48	LINE 49
G	1 9/16	1 1/4	7/8	9/16	1/4	1/8	0	3/16	7/16	13/16	1 1/4	1 11/16	2 1/8	2 7/16	2 3/4	2 13/16	2 13/16	2 5/8	2 5/16	1 7/8	1 5/16	11/16	0
F	1 13/16	1 7/16	1	5/8	1/4	1/8	0	3/16	1/2	7/8	1 3/8	1 7/8	2 3/8	2 3/4	3 1/16	3 1/8	3 1/8	2 15/16	2 9/16	2 1/8	1 1/2	3/4	0
E	2	1 9/16	1 1/8	11/16	5/16	1/8	0	1/4	1/2	15/16	1 7/16	2	2 1/2	2 7/8	3 1/4	3 3/8	3 3/8	3 3/16	2 3/4	2 5/16	1 5/8	13/16	0
D	2 1/16	1 5/8	1 3/16	3/4	5/16	1/8	0	3/16	1/2	15/16	1 7/16	2 1/16	2 9/16	2 15/16	3 5/16	3 7/16	3 7/16	3 1/4	2 7/8	2 5/16	1 5/8	7/8	0
C	2	1 5/8	1 1/8	3/4	5/16	1/8	0	3/16	1/2	15/16	1 7/16	1 15/16	2 7/16	2 7/8	3 1/4	3 3/8	3 3/8	3 3/16	2 13/16	2 5/16	1 9/16	13/16	0
B	1 7/8	1 1/2	1 1/16	11/16	5/16	1/8	0	3/16	7/16	7/8	1 5/16	1 13/16	2 5/16	2 11/16	3	3 1/8	3 1/8	2 15/16	2 9/16	2 1/8	1 1/2	3/4	0
A	1 5/8	1 5/16	15/16	5/8	1/4	1/8	0	3/16	7/16	13/16	1 3/16	1 5/8	2 1/16	2 7/16	2 11/16	2 13/16	2 3/4	2 5/8	2 5/16	1 7/8	1 5/16	11/16	0

TOTAL DEAD LOAD DEFLECTION

BEAM LINE			℄ BOLTED SPLICE 3				℄ PIER 27				℄ BOLTED SPLICE 4												℄ BEARING PIER 28
	LINE 27	LINE 28	LINE 29	LINE 30	LINE 31	LINE 32	LINE 33	LINE 34	LINE 35	LINE 36	LINE 37	LINE 38	LINE 39	LINE 40	LINE 41	LINE 42	LINE 43	LINE 44	LINE 45	LINE 46	LINE 47	LINE 48	LINE 49
G	2 1/8	1 11/16	1 3/16	3/4	5/16	1/8	0	1/4	9/16	1	1 9/16	2 3/16	2 11/16	3 1/8	3 7/16	3 9/16	3 9/16	3 3/8	2 15/16	2 7/16	1 11/16	7/8	0
F	2 5/16	1 7/8	1 5/16	13/16	3/8	3/16	0	1/4	5/8	1 1/8	1 11/16	2 3/8	2 15/16	3 7/16	3 13/16	3 15/16	3 15/16	3 11/16	3 1/4	2 5/8	1 7/8	15/16	0
E	2 1/2	2	1 7/16	7/8	7/16	3/16	0	1/4	5/8	1 1/8	1 13/16	2 1/2	3 1/16	3 9/16	4	4 3/16	4 3/16	3 15/16	3 7/16	2 13/16	2	1	0
D	2 5/8	2 1/16	1 1/2	15/16	7/16	3/16	0	1/4	5/8	1 1/8	1 13/16	2 1/2	3 1/8	3 5/8	4 1/16	4 1/4	4 1/4	4	3 1/2	2 7/8	2	1 1/16	0
C	2 9/16	2 1/16	1 1/2	15/16	7/16	3/16	0	1/4	9/16	1 1/8	1 3/4	2 7/16	3 1/16	3 9/16	4	4 1/8	4 1/8	3 15/16	3 7/16	2 13/16	2	1	0
B	2 7/16	1 15/16	1 3/8	7/8	7/16	3/16	0	1/4	9/16	1 1/16	1 5/8	2 1/4	2 7/8	3 3/8	3 3/4	3 7/8	3 7/8	3 11/16	3 1/4	2 5/8	1 7/8	15/16	0
A	2 3/16	1 3/4	1 1/4	13/16	3/8	3/16	0	3/16	1/2	1	1 1/2	2 1/16	2 5/8	3 1/16	3 7/16	3 9/16	3 1/2	3 5/16	2 15/16	2 3/8	1 11/16	7/8	0

NOTES:
LINE NUMBERS CORRESPOND TO THE HEXAGONAL NUMBERS SHOWN ON THE SLAB ELEVATION SHEET.

WORK THIS SHEET WITH THE "SLAB ELEVATION PLAN" ON DESIGN SHEET 195 AND THE "DEFLECTION DIAGRAM" ON DESIGN SHEET 137.

NEGATIVE NUMBERS INDICATE UPWARD DEFLECTION. NEGATIVE VALUES DO NOT INDICATE THAT THE DEFLECTION IS OPPOSITE OF THE SHAPE DEFINED BY THE "DEAD LOAD DEFLECTION DIAGRAM."

whks
engineers + planners + land surveyors

DESIGN FOR VARIABLE SKEW (L.A.)

2271'-6 x VARI. CONTINUOUS WELDED GIRDER BRIDGE-EBL W/14' BIKE TRAIL

138'-10 & 151'-0 7/8 END SPANS MULTIPLE LENGTH INTERIOR SPANS

DEFLECTION TABLES - UNIT 3

STA. 6792+60.93 - 52' LEFT ℄ I-74 OCTOBER, 2015

SCOTT COUNTY

IOWA DEPARTMENT OF TRANSPORTATION - HIGHWAY DIVISION

DESIGN SHEET NO. 139 OF 282 FILE NO. 30253 DESIGN NO. 3408

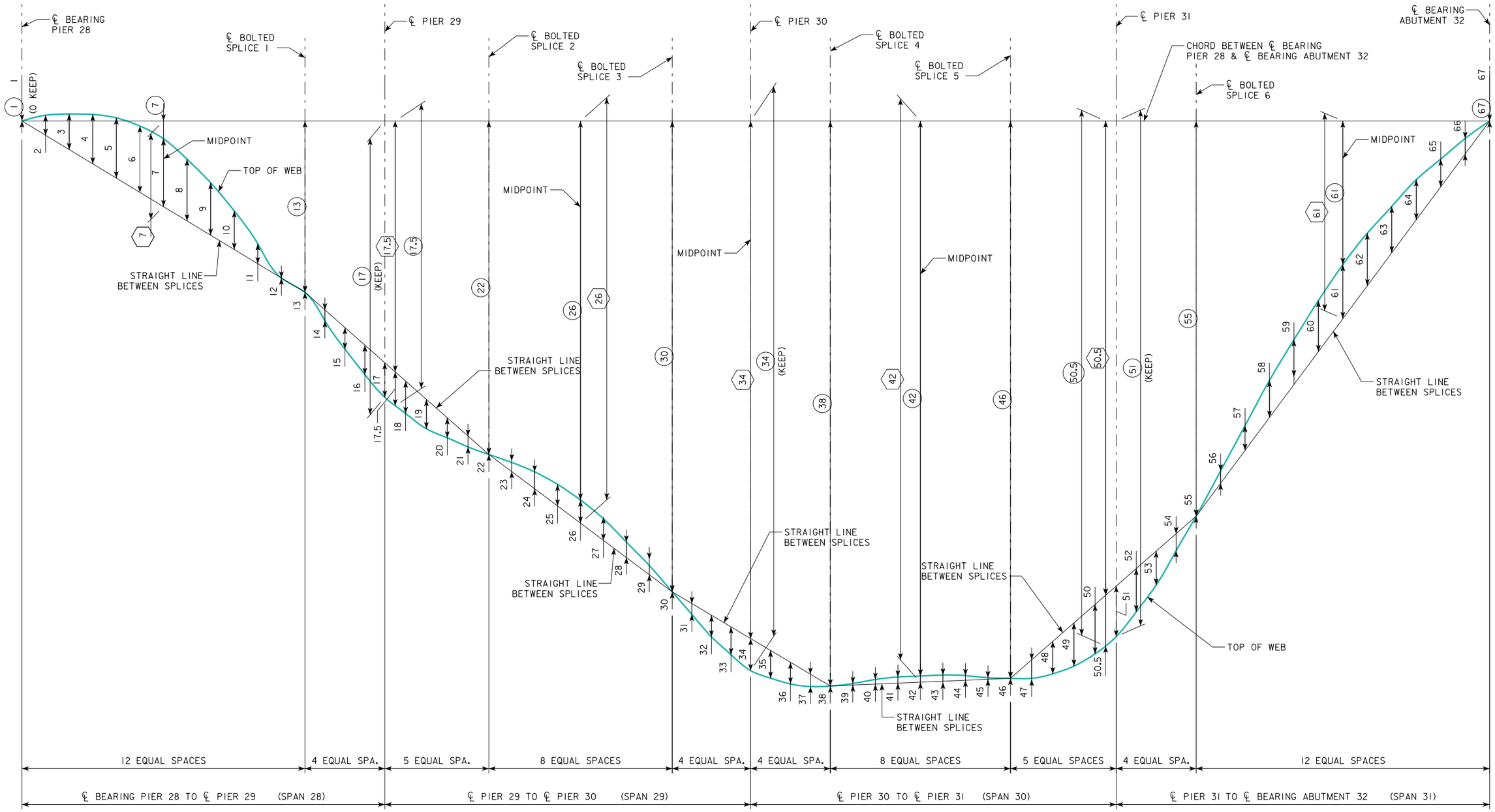

GIRDERS AS FABRICATED WITH WEBS HORIZONTAL DIAGRAM

NOTES:
LINE NUMBERS CORRESPOND TO THE HEXAGONAL NUMBERS SHOWN ON THE SLAB ELEVATION SHEET.

NUMBERS ENDING IN ".5" CORRESPOND TO THE MIDPOINT OF THE WEB SPLICE SECTION, NOT NECESSARILY THE MIDPOINT OF ADJACENT LINES.

WORK THIS SHEET WITH THE "SLAB ELEVATION PLAN" ON DES. SHT. 196 AND THE "GIRDER FABRICATION TABLE" ON DES. SHT. 142.

whks
engineers + planners + land surveyors

DESIGN FOR VARIABLE SKEW (L.A.)

2271'-6 x VARI. CONTINUOUS WELDED GIRDER BRIDGE-EBL W/14' BIKE TRAIL

138'-10 & 151'-0 7/8 END SPANS MULTIPLE LENGTH INTERIOR SPANS

GIRDER FABRICATION DIAGRAM-UNIT 4

STA. 6792+60.93 - 52' LEFT ℄ I-74 OCTOBER, 2015

SCOTT COUNTY

IOWA DEPARTMENT OF TRANSPORTATION - HIGHWAY DIVISION

DESIGN SHEET NO. 140 OF 282 FILE NO. 30253 DESIGN NO. 3408

DESIGN TEAM CF / BB / MG	SCOTT COUNTY	PROJECT NUMBER BRFIM-074-1(200)5--05-82	SHEET NUMBER 141

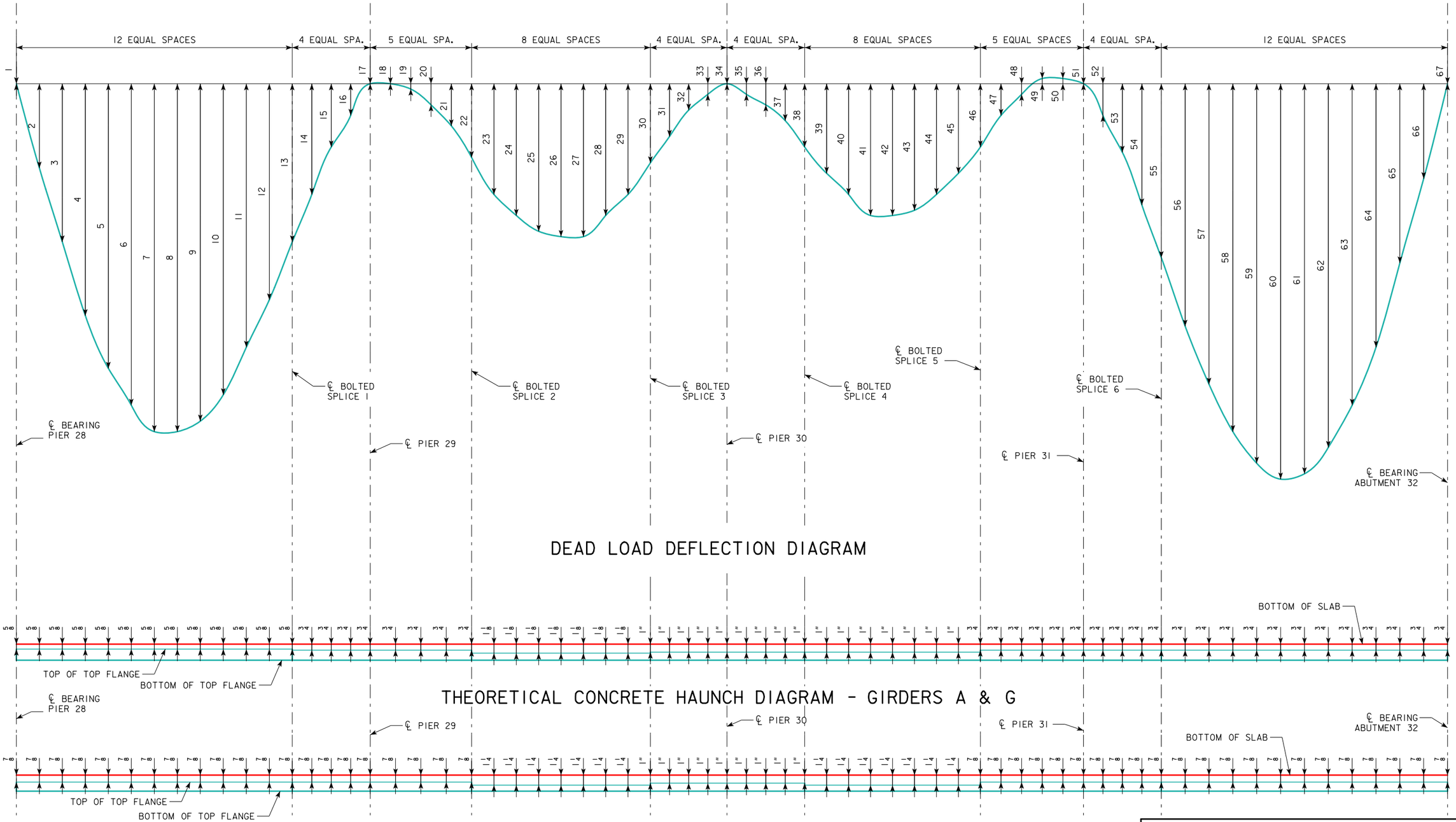

NOTES:

LINE NUMBERS CORRESPOND TO THE HEXAGONAL NUMBERS SHOWN ON THE SLAB ELEVATION SHEET.

WORK THIS SHEET WITH THE "SLAB ELEVATION PLAN" ON DESIGN SHEET 196 AND THE "DEAD LOAD DEFELCTION TABLES" ON DESIGN SHEET 143.

whks
engineers + planners + land surveyors

DESIGN FOR VARIABLE SKEW (L.A.)

2271'-6 x VARI. CONTINUOUS WELDED GIRDER BRIDGE-EBL W/14' BIKE TRAIL

138'-10 & 151'-0 7/8 END SPANS MULTIPLE LENGTH INTERIOR SPANS

DEFLECTION DIAGRAM-UNIT 4

STA. 6792+60.93 - 52' LEFT ℄ I-74 OCTOBER, 2015

SCOTT COUNTY

IOWA DEPARTMENT OF TRANSPORTATION - HIGHWAY DIVISION

DESIGN SHEET NO. 141 OF 282 FILE NO. 30253 DESIGN NO. 3408

GIRDERS AS FABRICATED WITH WEBS HORIZONTAL

BEAM LINE	℄ BEARING PIER 28														℄ BOLTED SPLICE 1					℄ PIER 29									℄ BOLTED SPLICE 2			
	1	(1)	LINE 2	LINE 3	LINE 4	LINE 5	LINE 6	7	(7)	⟨7⟩	LINE 8	LINE 9	LINE 10	LINE 11	LINE 12	13	(13)	LINE 14	LINE 15	LINE 16	17	(17)	17.5	(17.5)	⟨17.5⟩	LINE 18	LINE 19	LINE 20	LINE 21	22	(22)	LINE 23	LINE 24	LINE 25
G	0	0	3/4	1 1/4	1 13/16	2 3/16	2 3/8	2 7/16	-13/16	-3 1/4	2 1/4	1 15/16	1 7/16	3/4	0	0	-7 5/16	-7/16	-13/16	-1 1/16	-1 5/16	-11 9/16	-1 1/4	-1'-0	-10 3/4	-1 3/16	-1 1/16	-3/4	-3/8	0	-1'-2 1/8	5/16	9/16	3/4
F	0	0	13/16	1 3/8	1 15/16	2 1/4	2 1/2	2 5/8	-1/2	-3 1/8	2 3/8	2 1/16	1 1/2	13/16	0	0	-7 1/8	-7/16	-7/8	-1 1/8	-1 3/8	-11 7/16	-1 5/16	-11 13/16	-10 1/2	-1 1/4	-1 1/8	-13/16	-7/16	0	-1'-1 15/16	5/16	5/8	13/16
E	0	0	13/16	1 7/16	2	2 3/8	2 5/8	2 11/16	-5/16	-3	2 1/2	2 1/8	1 9/16	13/16	0	0	-6 15/16	-7/16	-7/8	-1 3/16	-1 7/16	-11 5/16	-1 3/8	-11 11/16	-10 5/16	-1 5/16	-1 3/16	-13/16	-7/16	0	-1'-1 11/16	5/16	5/8	13/16
D	0	0	13/16	1 7/16	2	2 7/16	2 11/16	2 3/4	-1/4	-2 15/16	2 1/2	2 1/8	1 9/16	13/16	0	0	-6 13/16	-7/16	-7/8	-1 3/16	-1 7/16	-11 3/16	-1 3/8	-11 9/16	-10 3/16	-1 5/16	-1 3/16	-13/16	-7/16	0	-1'-1 1/2	3/8	11/16	7/8
C	0	0	13/16	1 7/16	2	2 3/8	2 5/8	2 11/16	-1/4	-2 15/16	2 7/16	2 1/8	1 9/16	13/16	0	0	-6 3/4	-7/16	-7/8	-1 3/16	-1 7/16	-11	-1 3/8	-11 3/8	-10	-1 5/16	-1 3/16	-13/16	-7/16	0	-1'-1 5/16	3/8	11/16	7/8
B	0	0	13/16	1 1/2	2 1/8	2 9/16	2 7/8	3	-3/8	-3 3/8	2 7/8	2 9/16	2 1/8	1 1/2	3/4	0	-6 3/4	-7/16	-7/8	-1 1/8	-1 3/8	-10 7/8	-1 5/16	-11 1/4	-9 15/16	-1 5/16	-1 1/8	-13/16	-7/16	0	-1'-1 1/8	5/16	5/8	13/16
A	0	0	3/4	1 7/16	2	2 7/16	2 11/16	2 13/16	-9/16	-3 3/8	2 11/16	2 7/16	2	1 3/8	3/4	0	-6 3/4	-7/16	-7/8	-1 1/8	-1 5/16	-10 3/4	-1 1/4	-11 1/16	-9 13/16	-1 1/4	-1 1/16	-3/4	-3/8	0	-1'-0 7/8	5/16	5/8	13/16

GIRDERS AS FABRICATED WITH WEBS HORIZONTAL

BEAM LINE							℄ BOLTED SPLICE 3					℄ PIER 30						℄ BOLTED SPLICE 4											℄ BOLTED SPLICE 5					
	26	(26)	⟨26⟩	LINE 27	LINE 28	LINE 29	30	(30)	LINE 31	LINE 32	LINE 33	34	(34)	⟨34⟩	LINE 35	LINE 36	LINE 37	38	(38)	LINE 39	LINE 40	LINE 41	42	(42)	⟨42⟩	LINE 43	LINE 44	LINE 45	46	(46)	LINE 47	LINE 48	LINE 49	LINE 50
G	13/16	-1'-4 1/4	-1'-5	3/4	9/16	5/16	0	-1'-7 15/16	-1/2	-7/8	-1 1/16	-1 1/4	-1'-10 15/16	-1'-9 3/4	-1 1/16	-7/8	-7/16	0	-1'-11 9/16	0	1/16	1/8	1/8	-1'-11 1/4	-1'-11 5/16	1/16	1/16	0	0	-1'-11 1/16	-11/16	-1 3/16	-1 5/8	-1 7/8
F	7/8	-1'-3 15/16	-1'-4 3/4	13/16	5/8	5/16	0	-1'-7 5/8	-1/2	-7/8	-1 1/8	-1 1/4	-1'-10 11/16	-1'-9 7/16	-1 1/8	-7/8	-7/16	0	-1'-11 5/16	1/16	1/8	3/16	3/16	-1'-10 15/16	-1'-11 1/8	3/16	1/8	1/16	0	-1'-10 7/8	-11/16	-1 1/4	-1 3/4	-1 15/16
E	7/8	-1'-3 5/8	-1'-4 1/2	7/8	5/8	3/8	0	-1'-7 5/16	-1/2	-7/8	-1 1/8	-1 1/4	-1'-10 1/2	-1'-9 3/16	-1 1/8	-7/8	-1/2	0	-1'-11 1/16	1/16	1/8	1/4	1/4	-1'-10 5/8	-1'-10 7/8	3/16	1/8	1/16	0	-1'-10 11/16	-11/16	-1 5/16	-1 3/4	-2
D	15/16	-1'-3 3/8	-1'-4 5/16	7/8	5/8	3/8	0	-1'-7 1/16	-7/16	-7/8	-1 1/8	-1 5/16	-1'-10 1/4	-1'-8 15/16	-1 1/8	-7/8	-1/2	0	-1'-10 7/8	1/16	3/16	1/4	1/4	-1'-10 7/16	-1'-10 11/16	1/4	3/16	1/16	0	-1'-10 9/16	-3/4	-1 5/16	-1 13/16	-2
C	15/16	-1'-3 1/8	-1'-4 1/16	7/8	5/8	3/8	0	-1'-6 13/16	-7/16	-7/8	-1 1/8	-1 1/4	-1'-10	-1'-8 3/4	-1 1/8	-7/8	-1/2	0	-1'-10 11/16	1/16	1/8	1/4	1/4	-1'-10 5/16	-1'-10 9/16	1/4	3/16	1/16	0	-1'-10 7/16	-3/4	-1 5/16	-1 3/4	-2
B	7/8	-1'-2 15/16	-1'-3 13/16	7/8	5/8	3/8	0	-1'-6 9/16	-3/8	-7/8	-1 1/16	-1 1/4	-1'-9 3/4	-1'-8 1/2	-1 1/16	-7/8	-1/2	0	-1'-10 1/2	1/16	1/8	3/16	3/16	-1'-10 3/16	-1'-10 3/8	3/16	1/8	1/16	0	-1'-10 5/16	-11/16	-1 5/16	-1 3/4	-1 15/16
A	13/16	-1'-2 3/4	-1'-3 5/8	13/16	5/8	5/16	0	-1'-6 5/16	-3/8	-13/16	-1	-1 3/16	-1'-9 1/2	-1'-8 5/16	-1 1/16	-7/8	-7/16	0	-1'-10 5/16	1/16	1/16	1/8	1/8	-1'-10 3/16	-1'-10 1/4	1/16	1/16	0	0	-1'-10 1/4	-11/16	-1 1/4	-1 11/16	-1 7/8

GIRDERS AS FABRICATED WITH WEBS HORIZONTAL

BEAM LINE				℄ PIER 31					℄ BOLTED SPLICE 6															℄ BEARING ABUT. 32	
	50.5	(50.5)	⟨50.5⟩	51	(51)	LINE 52	LINE 53	LINE 54	55	(55)	LINE 56	LINE 57	LINE 58	LINE 59	LINE 60	61	(61)	⟨61⟩	LINE 62	LINE 63	LINE 64	LINE 65	LINE 66	67	(67)
G	-1 7/8	-1'-9 13/16	-1'-7 15/16	-1 15/16	-1'-9 1/4	-1 5/8	-1 1/4	-11/16	0	-1'-4 3/8	7/16	7/8	1 5/16	1 5/8	1 13/16	1 15/16	-6 1/4	-8 3/16	1 7/8	1 3/4	1 1/2	1 1/16	9/16	0	0
F	-1 15/16	-1'-9 11/16	-1'-7 3/4	-2	-1'-9 1/8	-1 11/16	-1 5/16	-11/16	0	-1'-4 1/4	1/2	15/16	1 3/8	1 3/4	1 15/16	2 1/16	-6 1/16	-8 1/8	2	1 13/16	1 9/16	1 1/8	5/8	0	0
E	-2	-1'-9 9/16	-1'-7 9/16	-2 1/16	-1'-9	-1 3/4	-1 3/8	-11/16	0	-1'-4 1/8	1/2	1	1 7/16	1 13/16	2	2 3/16	-5 7/8	-8 1/16	2 1/16	1 7/8	1 5/8	1 1/8	5/8	0	0
D	-2	-1'-9 7/16	-1'-7 7/16	-2 1/16	-1'-8 7/8	-1 3/4	-1 3/8	-11/16	0	-1'-4	1/2	1	1 1/2	1 13/16	2 1/16	2 3/16	-5 13/16	-8	2 1/8	1 7/8	1 5/8	1 1/8	5/8	0	0
C	-2	-1'-9 5/16	-1'-7 5/16	-2 1/16	-1'-8 13/16	-1 3/4	-1 3/8	-11/16	0	-1'-3 15/16	1/2	1	1 7/16	1 13/16	2	2 1/8	-5 13/16	-7 15/16	2 1/16	1 13/16	1 9/16	1 1/8	9/16	0	0
B	-1 15/16	-1'-9 3/16	-1'-7 1/4	-2 1/16	-1'-8 11/16	-1 11/16	-1 5/16	-11/16	0	-1'-3 7/8	1/2	15/16	1 3/8	1 11/16	1 7/8	2 1/16	-5 7/8	-7 15/16	1 15/16	1 3/4	1 7/16	1	9/16	0	0
A	-1 7/8	-1'-9 1/16	-1'-7 3/16	-1 15/16	-1'-8 9/16	-1 11/16	-1 1/4	-11/16	0	-1'-3 13/16	7/16	7/8	1 1/4	1 9/16	1 3/4	1 7/8	-6	-7 15/16	1 13/16	1 5/8	1 5/16	15/16	1/2	0	0

NOTES:

LINE NUMBERS CORRESPOND TO THE HEXAGONAL NUMBERS SHOWN ON THE SLAB ELEVATIONS SHEET.

WORK THIS SHEET WITH THE "SLAB ELEVATION PLAN" ON DES. SHT. 196 AND THE "GIRDER FABRICATION DIAGRAM" ON DES. SHT. 140.

NUMBERS THAT ARE NOT ENCLOSED INDICATE DIMENSION FROM CHORD BETWEEN SPLICES TO TOP OF WEB.

ENCIRCLED NUMBERS INDICATE DIMENSION FROM CHORD BETWEEN GIRDER END BEARINGS TO TOP OF WEB.

HEXAGONAL NUMBERS INDICATE DIMENSION FROM CHORD BETWEEN GIRDER END BEARINGS TO CHORD BETWEEN SPLICES.

NEGATIVE CAMBER VALUES INDICATE THAT THE WEB IS CAMBERED DOWNWARD. NEGATIVE VALUES DO NOT INDICATE THAT THE CAMBER IS OPPOSITE OF THE SHAPE DEFINED BY THE "GIRDER FABRICATION DIAGRAM."

whks
engineers + planners + land surveyors

DESIGN FOR VARIABLE SKEW (L.A.)

2271'-6 x VARI. CONTINUOUS WELDED GIRDER BRIDGE-EBL W/14' BIKE TRAIL

138'-10 & 151'-0 7/8 END SPANS MULTIPLE LENGTH INTERIOR SPANS

GIRDER FABRICATION TABLE-UNIT 4

STA. 6792+60.93 - 52' LEFT ℄ I-74 OCTOBER, 2015

SCOTT COUNTY

IOWA DEPARTMENT OF TRANSPORTATION - HIGHWAY DIVISION

DESIGN SHEET NO. 142 OF 282 FILE NO. 30253 DESIGN NO. 3408

DEAD LOAD DEFLECTION DUE TO WEIGHT OF CONCRETE SLAB

BEAM LINE	℄ BEARING PIER 28												℄ BOLTED SPLICE 1				℄ PIER 29					℄ BOLTED SPLICE 2								℄ BOLTED SPLICE 3				℄ PIER 30	
	LINE 1	LINE 2	LINE 3	LINE 4	LINE 5	LINE 6	LINE 7	LINE 8	LINE 9	LINE 10	LINE 11	LINE 12	LINE 13	LINE 14	LINE 15	LINE 16	LINE 17	LINE 18	LINE 19	LINE 20	LINE 21	LINE 22	LINE 23	LINE 24	LINE 25	LINE 26	LINE 27	LINE 28	LINE 29	LINE 30	LINE 31	LINE 32	LINE 33	LINE 34	LINE 35
G	0	11/16	1 1/4	1 7/8	2 1/4	2 9/16	2 13/16	2 13/16	2 11/16	2 1/2	2 1/8	1 3/4	1 1/4	7/8	1/2	1/4	0	0	1/16	1/4	7/16	11/16	15/16	1 3/16	1 5/16	1 3/8	1 5/16	1 1/8	15/16	11/16	1/2	1/4	1/8	0	1/16
F	0	11/16	1 3/8	2	2 3/8	2 3/4	3	3	2 7/8	2 5/8	2 1/4	1 13/16	1 5/16	15/16	1/2	1/4	0	0	1/16	1/4	1/2	3/4	1	1 1/4	1 3/8	1 7/16	1 7/16	1 1/4	1	3/4	1/2	1/4	1/8	0	1/16
E	0	3/4	1 7/16	2 1/16	2 9/16	2 7/8	3 1/8	3 1/8	3	2 3/4	2 3/8	1 7/8	1 3/8	1	9/16	1/4	0	0	1/16	1/4	1/2	3/4	1 1/16	1 5/16	1 7/16	1 1/2	1 1/2	1 1/4	1 1/16	3/4	1/2	1/4	1/8	0	1/16
D	0	3/4	1 7/16	2 1/16	2 9/16	2 15/16	3 3/16	3 3/16	3 1/16	2 13/16	2 3/8	1 15/16	1 7/16	1	9/16	1/4	0	0	1/16	1/4	1/2	3/4	1 1/16	1 5/16	1 1/2	1 9/16	1 1/2	1 5/16	1 1/16	3/4	1/2	1/4	1/8	0	1/16
C	0	3/4	1 7/16	2 1/16	2 1/2	2 7/8	3 1/8	3 1/8	3	2 3/4	2 3/8	1 15/16	1 3/8	1	9/16	1/4	0	0	1/16	1/4	1/2	3/4	1 1/16	1 5/16	1 1/2	1 1/2	1 1/2	1 5/16	1 1/16	3/4	1/2	1/4	1/8	0	1/16
B	0	3/4	1 3/8	1 15/16	2 7/16	2 3/4	3	3	2 7/8	2 5/8	2 1/4	1 13/16	1 3/8	15/16	9/16	1/4	0	0	1/16	1/4	1/2	3/4	1	1 1/4	1 7/16	1 7/16	1 7/16	1 1/4	1	3/4	1/2	1/4	1/8	0	1/16
A	0	11/16	1 5/16	1 13/16	2 1/4	2 9/16	2 3/4	2 13/16	2 11/16	2 1/2	2 1/8	1 3/4	1 1/4	7/8	1/2	1/4	0	0	1/16	1/4	7/16	11/16	15/16	1 3/16	1 5/16	1 3/8	1 3/8	1 3/16	1	11/16	1/2	1/4	1/8	0	1/16

TOTAL DEAD LOAD DEFLECTION

BEAM LINE	℄ BEARING PIER 28												℄ BOLTED SPLICE 1				℄ PIER 29					℄ BOLTED SPLICE 2								℄ BOLTED SPLICE 3				℄ PIER 30	
	LINE 1	LINE 2	LINE 3	LINE 4	LINE 5	LINE 6	LINE 7	LINE 8	LINE 9	LINE 10	LINE 11	LINE 12	LINE 13	LINE 14	LINE 15	LINE 16	LINE 17	LINE 18	LINE 19	LINE 20	LINE 21	LINE 22	LINE 23	LINE 24	LINE 25	LINE 26	LINE 27	LINE 28	LINE 29	LINE 30	LINE 31	LINE 32	LINE 33	LINE 34	LINE 35
G	0	7/8	1 11/16	2 7/16	3	3 7/16	3 3/4	3 3/4	3 5/8	3 5/16	2 7/8	2 5/16	1 11/16	1 3/16	11/16	5/16	0	0	0	1/4	1/2	3/4	1 1/16	1 3/8	1 9/16	1 5/8	1 5/8	1 3/8	1 1/8	7/8	9/16	5/16	1/8	0	1/8
F	0	15/16	1 13/16	2 5/8	3 3/16	3 5/8	3 15/16	3 15/16	3 13/16	3 1/2	3	2 7/16	1 13/16	1 1/4	3/4	3/8	0	0	0	1/4	1/2	13/16	1 1/8	1 7/16	1 5/8	1 11/16	1 11/16	1 7/16	1 3/16	7/8	5/8	5/16	1/8	0	1/8
E	0	1	1 7/8	2 11/16	3 5/16	3 13/16	4 1/16	4 1/8	3 15/16	3 5/8	3 1/8	2 9/16	1 7/8	1 5/16	3/4	3/8	0	0	0	1/4	1/2	13/16	1 3/16	1 1/2	1 11/16	1 13/16	1 3/4	1 1/2	1 1/4	15/16	5/8	5/16	1/8	0	1/8
D	0	1	1 7/8	2 3/4	3 3/8	3 13/16	4 1/8	4 1/8	4	3 11/16	3 1/8	2 9/16	1 7/8	1 5/16	3/4	3/8	0	0	1/16	1/4	1/2	7/8	1 3/16	1 9/16	1 3/4	1 13/16	1 13/16	1 9/16	1 5/16	15/16	5/8	5/16	1/8	0	1/8
C	0	1	1 7/8	2 11/16	3 5/16	3 3/4	4 1/16	4 1/16	3 15/16	3 5/8	3 1/8	2 1/2	1 7/8	1 5/16	3/4	3/8	0	0	1/16	1/4	9/16	7/8	1 1/4	1 9/16	1 3/4	1 13/16	1 13/16	1 9/16	1 5/16	15/16	5/8	5/16	1/8	0	1/16
B	0	15/16	1 13/16	2 9/16	3 1/8	3 5/8	3 7/8	3 7/8	3 3/4	3 7/16	2 15/16	2 3/8	1 3/4	1 1/4	11/16	5/16	0	0	1/16	5/16	9/16	7/8	1 1/4	1 9/16	1 3/4	1 13/16	1 3/4	1 9/16	1 5/16	15/16	5/8	5/16	1/8	0	1/16
A	0	7/8	1 11/16	2 7/16	2 15/16	3 3/8	3 5/8	3 5/8	3 1/2	3 3/16	2 3/4	2 1/4	1 5/8	1 1/8	5/8	5/16	0	0	1/8	5/16	5/8	15/16	1 1/4	1 9/16	1 11/16	1 3/4	1 3/4	1 1/2	1 1/4	15/16	5/8	3/8	3/16	0	1/16

DEAD LOAD DEFLECTION DUE TO WEIGHT OF CONCRETE SLAB

BEAM LINE			℄ BOLTED SPLICE 4								℄ BOLTED SPLICE 5					℄ PIER 31				℄ BOLTED SPLICE 6												℄ BEARING ABUT. 32
	LINE 36	LINE 37	LINE 38	LINE 39	LINE 40	LINE 41	LINE 42	LINE 43	LINE 44	LINE 45	LINE 46	LINE 47	LINE 48	LINE 49	LINE 50	LINE 51	LINE 52	LINE 53	LINE 54	LINE 55	LINE 56	LINE 57	LINE 58	LINE 59	LINE 60	LINE 61	LINE 62	LINE 63	LINE 64	LINE 65	LINE 66	LINE 67
G	3/16	3/8	9/16	3/4	15/16	1 1/8	1 1/8	1 1/16	1	13/16	9/16	3/8	3/16	0	0	0	1/4	9/16	1	1 3/8	1 15/16	2 3/8	2 13/16	3 1/16	3 3/16	3 3/16	2 15/16	2 5/8	2 1/8	1 1/2	3/4	0
F	3/16	3/8	9/16	7/8	1 1/16	1 1/4	1 1/4	1 1/4	1 1/16	7/8	5/8	3/8	3/16	0	0	0	1/4	9/16	1	1 7/16	2	2 1/2	2 15/16	3 1/4	3 3/8	3 3/8	3 1/8	2 3/4	2 1/4	1 9/16	13/16	0
E	3/16	3/8	5/8	7/8	1 1/8	1 5/16	1 3/8	1 5/16	1 3/16	15/16	11/16	7/16	3/16	0	0	0	5/16	5/8	1 1/16	1 1/2	2 1/8	2 5/8	3 1/16	3 3/8	3 1/2	3 1/2	3 1/4	2 13/16	2 5/16	1 5/8	13/16	0
D	3/16	3/8	5/8	15/16	1 1/8	1 3/8	1 3/8	1 5/16	1 3/16	15/16	11/16	7/16	3/16	0	0	0	5/16	5/8	1 1/16	1 1/2	2 1/8	2 5/8	3 1/8	3 3/8	3 1/2	3 1/2	3 1/4	2 7/8	2 3/8	1 5/8	13/16	0
C	3/16	3/8	5/8	7/8	1 1/8	1 5/16	1 5/16	1 5/16	1 3/16	15/16	11/16	7/16	3/16	0	0	0	5/16	5/8	1 1/16	1 1/2	2 1/8	2 5/8	3 1/16	3 3/8	3 1/2	3 1/2	3 1/4	2 7/8	2 5/16	1 5/8	13/16	0
B	3/16	3/8	9/16	13/16	1 1/16	1 3/16	1 1/4	1 3/16	1 1/16	7/8	5/8	3/8	1/8	0	0	0	5/16	5/8	1 1/16	1 1/2	2 1/16	2 9/16	3	3 1/4	3 3/8	3 3/8	3 1/8	2 3/4	2 1/4	1 9/16	13/16	0
A	1/8	5/16	9/16	3/4	15/16	1 1/16	1 1/8	1 1/16	15/16	3/4	9/16	5/16	1/8	0	0	0	5/16	9/16	1	1 7/16	2	2 7/16	2 7/8	3 1/8	3 1/4	3 1/4	3	2 5/8	2 3/16	1 1/2	13/16	0

TOTAL DEAD LOAD DEFLECTION

BEAM LINE			℄ BOLTED SPLICE 4								℄ BOLTED SPLICE 5					℄ PIER 31				℄ BOLTED SPLICE 6												℄ BEARING ABUT. 32
	LINE 36	LINE 37	LINE 38	LINE 39	LINE 40	LINE 41	LINE 42	LINE 43	LINE 44	LINE 45	LINE 46	LINE 47	LINE 48	LINE 49	LINE 50	LINE 51	LINE 52	LINE 53	LINE 54	LINE 55	LINE 56	LINE 57	LINE 58	LINE 59	LINE 60	LINE 61	LINE 62	LINE 63	LINE 64	LINE 65	LINE 66	LINE 67
G	3/16	7/16	11/16	15/16	1 1/8	1 5/16	1 5/16	1 1/4	1 1/8	7/8	5/8	3/8	1/8	-1/16	-1/16	0	3/8	3/4	1 5/16	1 7/8	2 5/8	3 1/4	3 13/16	4 1/8	4 1/4	4 1/4	3 15/16	3 1/2	2 7/8	2	1	0
F	1/4	7/16	11/16	1	1 1/4	1 7/16	1 7/16	1 3/8	1 1/4	15/16	11/16	3/8	1/8	-1/16	-1/16	0	3/8	13/16	1 3/8	2	2 3/4	3 3/8	3 15/16	4 5/16	4 1/2	4 7/16	4 1/8	3 5/8	3	2 1/16	1 1/16	0
E	1/4	7/16	11/16	1 1/16	1 5/16	1 1/2	1 9/16	1 1/2	1 5/16	1	11/16	3/8	1/8	-1/16	-1/16	0	3/8	13/16	1 7/16	2 1/16	2 13/16	3 1/2	4 1/16	4 7/16	4 5/8	4 5/8	4 1/4	3 3/4	3 1/16	2 1/8	1 1/8	0
D	1/4	7/16	3/4	1 1/16	1 5/16	1 9/16	1 9/16	1 1/2	1 5/16	1 1/16	3/4	3/8	1/8	-1/16	-1/16	0	3/8	13/16	1 7/16	2 1/16	2 7/8	3 9/16	4 1/8	4 1/2	4 11/16	4 5/8	4 5/16	3 13/16	3 1/8	2 1/8	1 1/8	0
C	3/16	7/16	11/16	1	1 5/16	1 1/2	1 1/2	1 7/16	1 5/16	1	11/16	3/8	1/8	-1/16	-1/16	0	3/8	13/16	1 7/16	2 1/16	2 13/16	3 1/2	4 1/8	4 7/16	4 5/8	4 5/8	4 5/16	3 3/4	3 1/16	2 1/8	1 1/8	0
B	3/16	7/16	5/8	15/16	1 3/16	1 3/8	1 7/16	1 3/8	1 3/16	15/16	5/8	5/16	1/8	-1/16	-1/16	0	3/8	13/16	1 7/16	2	2 13/16	3 7/16	4	4 3/8	4 1/2	4 1/2	4 3/16	3 11/16	3	2 1/8	1 1/16	0
A	3/16	3/8	5/8	7/8	1 1/16	1 1/4	1 1/4	1 3/16	1 1/16	13/16	9/16	5/16	1/16	-1/16	-1/16	0	3/8	13/16	1 3/8	2	2 11/16	3 5/16	3 7/8	4 1/4	4 3/8	4 3/8	4 1/16	3 9/16	2 7/8	2	1 1/16	0

NOTES:
LINE NUMBERS CORRESPOND TO THE HEXAGONAL NUMBERS SHOWN ON THE SLAB ELEVATION SHEET.

WORK THIS SHEET WITH THE "SLAB ELEVATION PLAN" ON DESIGN SHEET 196 AND THE "DEFLECTION DIAGRAM" ON DESIGN SHEET 141.

NEGATIVE NUMBERS INDICATE UPWARD DEFLECTION. NEGATIVE VALUES DO NOT INDICATE THAT THE DEFLECTION IS OPPOSITE OF THE SHAPE DEFINED BY THE "DEAD LOAD DEFLECTION DIAGRAM."

whks
engineers + planners + land surveyors

DESIGN FOR VARIABLE SKEW (L.A.)

2271'-6 x VARI. CONTINUOUS WELDED GIRDER BRIDGE-EBL W/14' BIKE TRAIL

138'-10 & 151'-0 7/8 END SPANS MULTIPLE LENGTH INTERIOR SPANS

DEFLECTION TABLES - UNIT 4

STA. 6792+60.93 - 52' LEFT ℄ I-74 OCTOBER, 2015

SCOTT COUNTY

IOWA DEPARTMENT OF TRANSPORTATION - HIGHWAY DIVISION

DESIGN SHEET NO. 143 OF 282 FILE NO. 30253 DESIGN NO. 3408

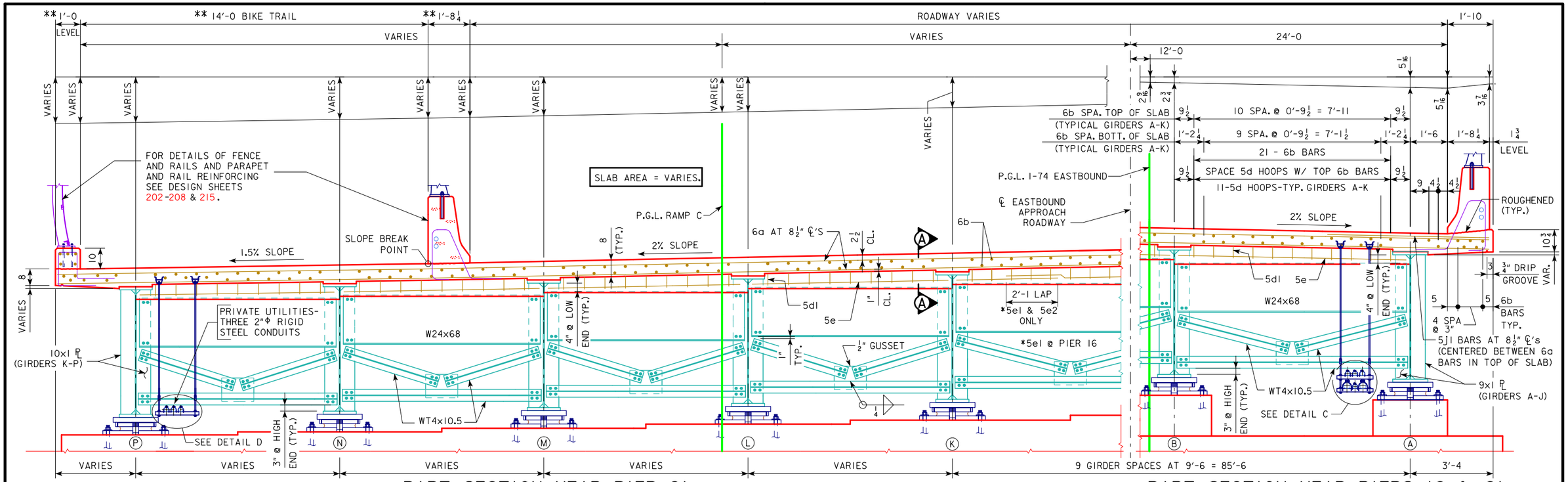

PART SECTION NEAR PIER 21

PART SECTION NEAR PIERS 16 & 21

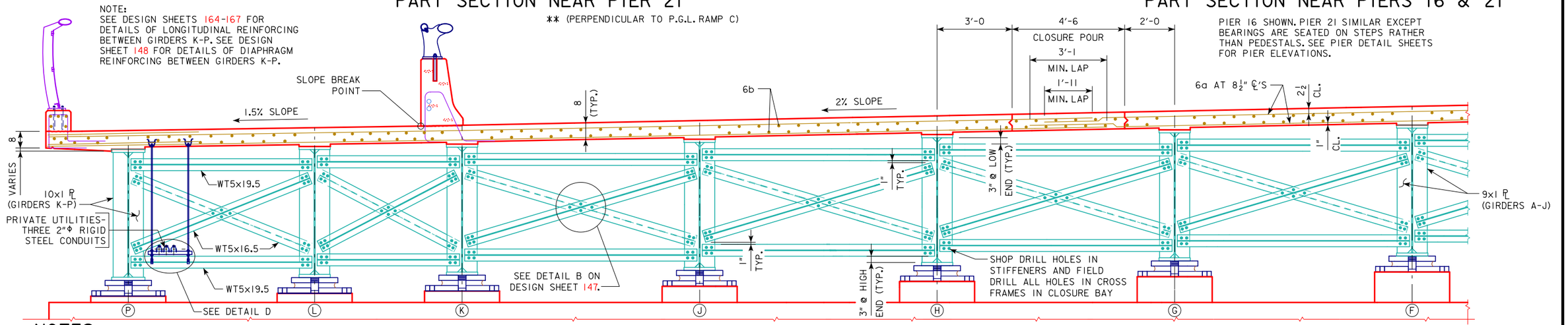

PART SECTION NEAR PIER 18

(PIER 17 SIMILAR, PIER 19 SIMILAR EXCEPT INCLUSION OF GIRDER M LOCATED BETWEEN GIRDERS L AND P, AND PIER 20 SIMILAR EXCEPT INCLUSION OF GIRDER M AND GIRDER N LOCATED BETWEEN GIRDERS L AND P. PIER 19 AND 20 BEARINGS ARE SEATED ON STEPS RATHER THAN PEDESTALS. SEE PIER DETAIL SHEETS FOR PIER ELEVATIONS.)

NOTES:

ALL SECTIONS LOOKING UPSTATION.

SEE DESIGN SHEET 147 FOR DETAILS AND SUPERSTRUCTURE NOTES.

SEE DESIGN SHEET 152 & 153 FOR ADDITIONAL STIFFENER AND WELDING DETAILS.

SEE DESIGN SHEET 146 FOR SECTION A-A.

SEE DESIGN SHEET 148 FOR ADDITIONAL DIAPHRAGM DETAILS.

SEE DESIGN SHEETS 164-167 FOR LONGITUDINAL SLAB REINFORCING LAYOUT.

THE BRACING IN THE CLOSURE POUR BAY IS TO BE INSTALLED AFTER THE SECOND STAGE HAS BEEN POURED AND PRIOR TO PLACING THE CLOSURE POUR. THE BOLT HOLES SHALL BE FIELD DRILLED IN THE CROSS BRACING MEMBERS TO PROVIDE ALLOWANCES FOR FIT UP OF THE DIAPHRAGMS.

SEE DESIGN SHEET 147 FOR DETAIL C & DETAIL D.

SEE P SHEETS AND N SHEETS IN THESE PLANS FOR ADDITIONAL DETAILS OF CONDUIT.

NOTE:

FOR END PIER DIAPHRAGMS (PIERS 16 & 21) USE 7/8"Φ BOLTS.

FOR INTERIOR DIAPHRAGMS (TYPICAL INTERIOR AND PIER DIAPHRAGMS) USE 1 1/8"Φ BOLTS IN BAYS BETWEEN GIRDERS A & K AND 1 1/4"Φ BOLTS IN BAYS BETWEEN GIRDERS K & P.

DESIGN FOR VARIABLE SKEW (L.A.)

2271'-6 x VARI. CONTINUOUS WELDED GIRDER BRIDGE-EBL W/14' BIKE TRAIL

138'-10 & 151'-0 7/8 END SPANS MULTIPLE LENGTH INTERIOR SPANS

TRANSVERSE SECTION-UNIT 1

STA. 6792+60.93 - 52' LEFT ℄ I-74 OCTOBER, 2015

SCOTT COUNTY

IOWA DEPARTMENT OF TRANSPORTATION - HIGHWAY DIVISION

DESIGN SHEET NO. 144 OF 282 FILE NO. 30253 DESIGN NO. 3408

DESIGN TEAM MG / BB / CF	SCOTT COUNTY	PROJECT NUMBER BRFIM-074-1(200)5--05-82	SHEET NUMBER 145

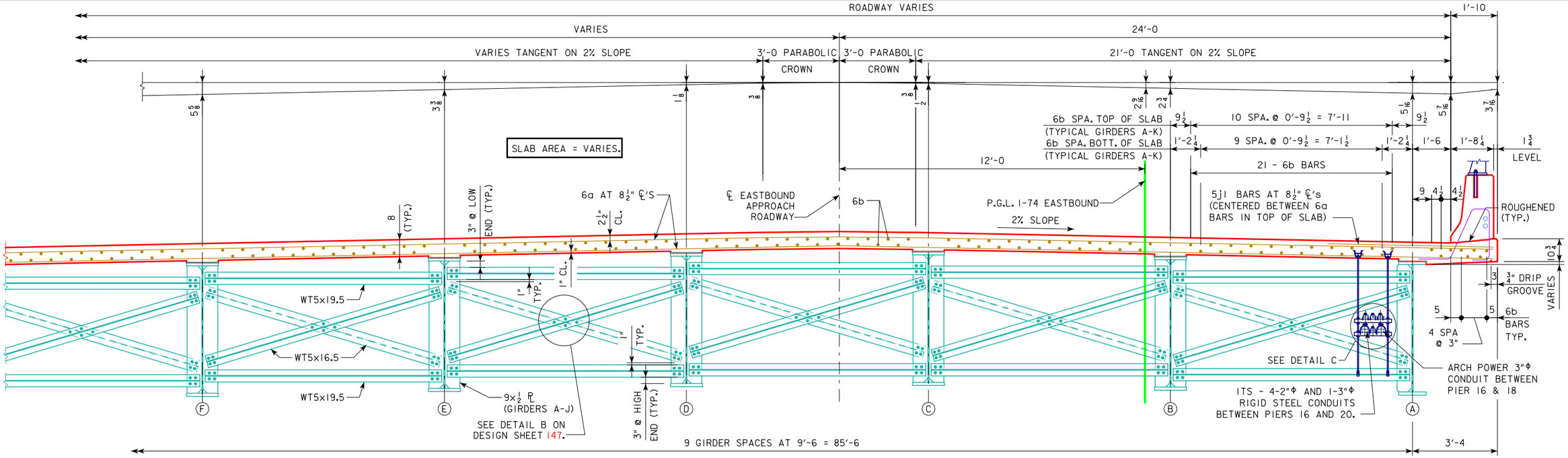

PART SECTION NEAR INTERMEDIATE DIAPHRAGM

NOTE:

FOR INTERIOR DIAPHRAGMS (TYPICAL INTERIOR AND PIER DIAPHRAGMS) USE 1⅛"Φ BOLTS IN BAYS BETWEEN GIRDERS A & K AND 1¼"Φ BOLTS IN BAYS BETWEEN GIRDERS K & P.

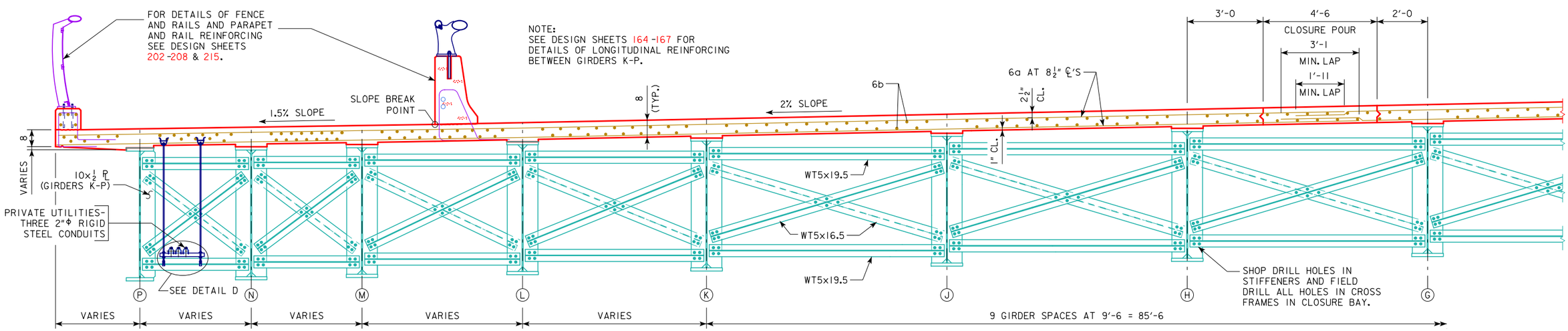

PART SECTION NEAR INTERMEDIATE DIAPHRAGM

NOTES:

SEE DESIGN SHEET 147 FOR DETAILS AND SUPERSTRUCTURE NOTES.

SEE DESIGN SHEETS 152 & 153 FOR ADDITIONAL STIFFENER AND WELDING DETAILS.

SEE DESIGN SHEETS 164-167 FOR LONGITUDINAL SLAB REINFORCING LAYOUT.

ALL SECTIONS LOOKING UPSTATION.

THE BRACING IN THE CLOSURE POUR BAY IS TO BE INSTALLED AFTER THE SECOND STAGE HAS BEEN POURED AND PRIOR TO PLACING THE CLOSURE POUR. THE BOLT HOLES SHALL BE FIELD DRILLED IN THE CROSS BRACING MEMBERS TO PROVIDE ALLOWANCES FOR FIT UP OF THE DIAPHRAGMS.

SEE DESIGN SHEET 147 FOR DETAIL C & DETAIL D.

SEE P SHEETS AND N SHEETS IN THESE PLANS FOR ADDITIONAL DETAILS OF CONDUIT.

whks engineers + planners + land surveyors

DESIGN FOR VARIABLE SKEW (L.A.)

2271'-6 x VARI. CONTINUOUS WELDED GIRDER BRIDGE-EBL W/14' BIKE TRAIL

138'-10 & 151'-0⅞ END SPANS MULTIPLE LENGTH INTERIOR SPANS

TRANSVERSE SECTION-UNIT 1

STA. 6792+60.93 - 52' LEFT ℄ I-74 OCTOBER, 2015

SCOTT COUNTY

IOWA DEPARTMENT OF TRANSPORTATION - HIGHWAY DIVISION

DESIGN SHEET NO. 145 OF 282 FILE NO. 30253 DESIGN NO. 3408

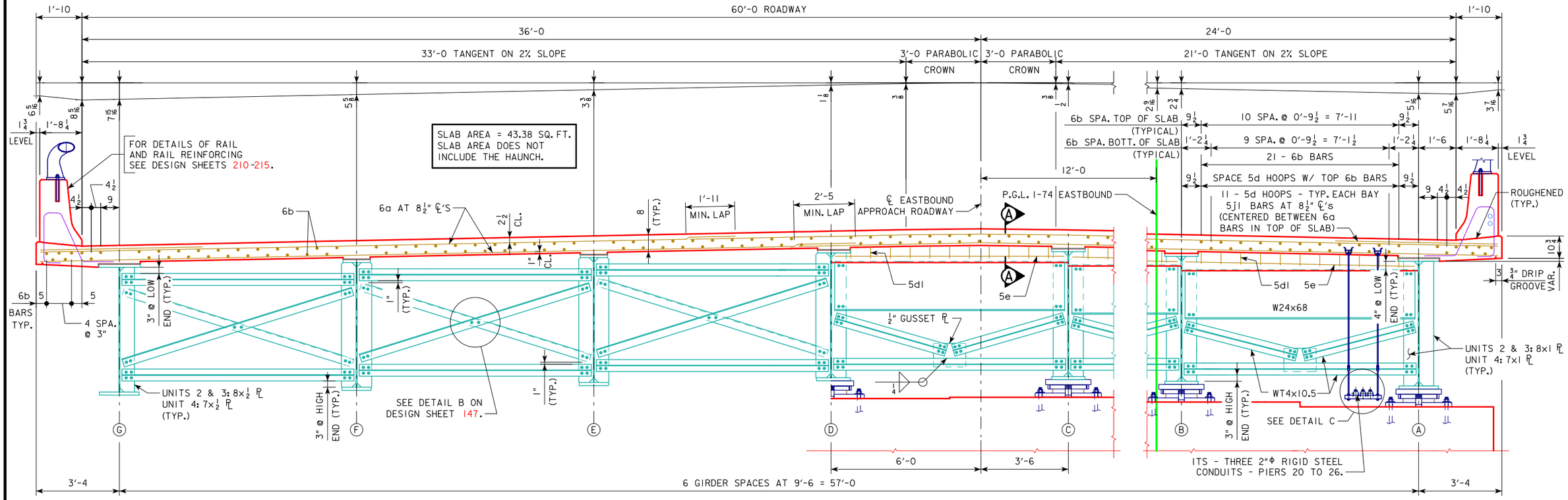

HALF SECTION NEAR INTERMEDIATE DIAPHRAGM

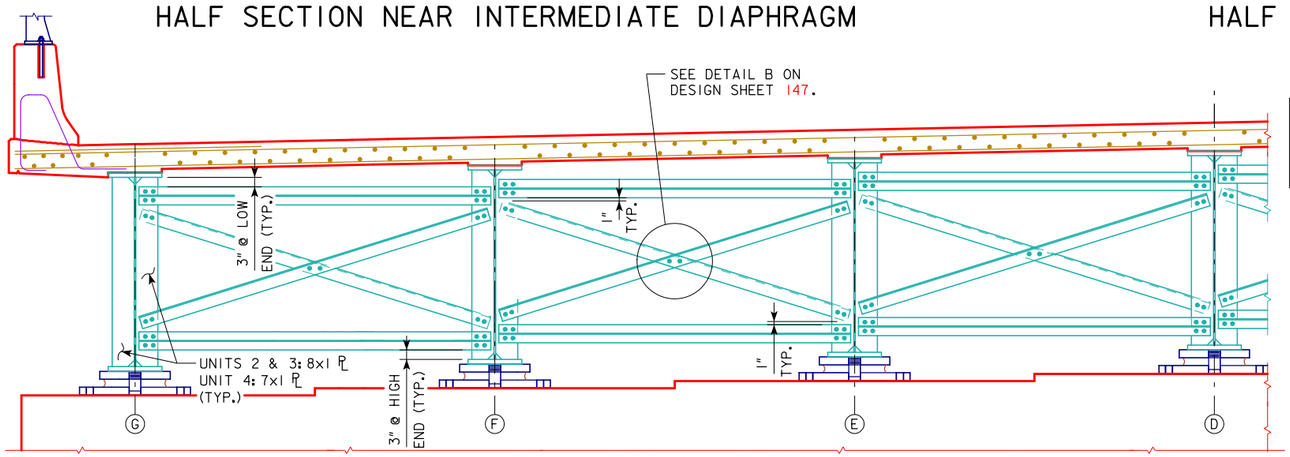

HALF SECTION NEAR INTERIOR PIERS 22-24, 26-27, & 29-31

HALF SECTION NEAR END PIERS 21, 25, 28, & ABUTMENT 32

STEPPED PIERS SHOWN, ABUTMENT 32 BEARINGS SEATED ON PEDESTALS NOT STEPS. SEE ABUTMENT DETAILS.

THE CONDUITS SHALL BE RUN BETWEEN THE CROSS FRAME DIAGONALS AT ALL INTERIOR CROSS FRAME LOCATIONS AS SHOWN ON DESIGN SHEET 145.

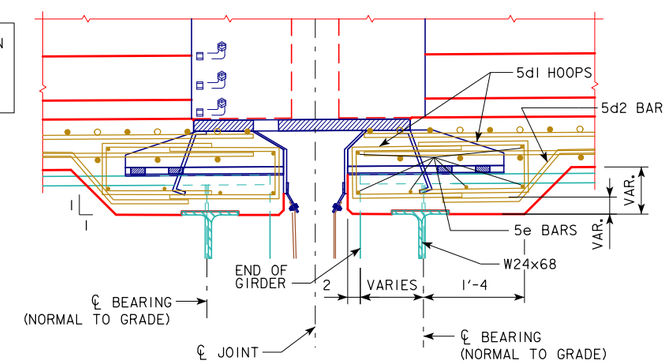

SECTION A-A

(NORMAL TO PIER)

NOTE: PLACE 5d HOOPS PARALLEL TO LONGIT. 6b BARS.

NOTES:

ALL SECTIONS LOOKING UPSTATION.

SEE DESIGN SHEET 147 FOR DETAILS AND SUPERSTRUCTURE NOTES.

SEE DESIGN SHEETS 152 & 153 FOR ADDITIONAL STIFFENER AND WELDING DETAILS.

SEE DESIGN SHEETS 149-151 FOR ADDITIONAL DIAPHRAGM DETAILS.

SEE DESIGN SHEET 147 FOR DETAIL C & DETAIL D.

SEE P SHEETS AND N SHEETS IN THESE PLANS FOR ADDITIONAL DETAILS OF CONDUIT.

INTERMEDIATE AND INTERIOR PIER DIAPHRAGM MEMBERS

	TOP CHORD	DIAGONALS	BOTTOM CHORD
UNIT 2	WT5x16.5	L4.0x3.5x⅜	WT4x12
* UNIT 3	WT5x19.5	L4.0x4.0x⅜	WT5x16.5
UNIT 4	WT5x15	L4.0x3.5x⅜	WT4x12

INTERMEDIATE AND INTERIOR PIER DIAPHRAGM BOLTS

UNIT 2	1⅛ Φ BOLTS
* UNIT 3	1¼ Φ BOLTS
UNIT 4	1" Φ BOLTS

* SEE DESIGN SHEETS 93-94 FOR MEMBER SIZES AND BOLT DIAMETER OF 2 LINES OF CROSS FRAMES SUPPORTING THE SIGN TRUSS ON UNIT 3 NEAR PIER 26.

whks engineers + planners + land surveyors

DESIGN FOR VARIABLE SKEW (L.A.)

2271'-6 x VARI. CONTINUOUS WELDED GIRDER BRIDGE-EBL W/14' BIKE TRAIL

138'-10 & 151'-0⅞ END SPANS MULTIPLE LENGTH INTERIOR SPANS

TRANSVERSE SECTION-UNITS 2, 3 & 4

STA. 6792+60.93 - 52' LEFT ℄ I-74 OCTOBER, 2015

SCOTT COUNTY

IOWA DEPARTMENT OF TRANSPORTATION - HIGHWAY DIVISION

DESIGN SHEET NO. 146 OF 282 FILE NO. 30253 DESIGN NO. 3408

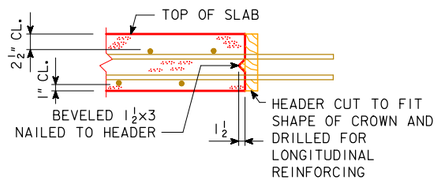

TRANSVERSE SLAB CONSTRUCTION JOINT

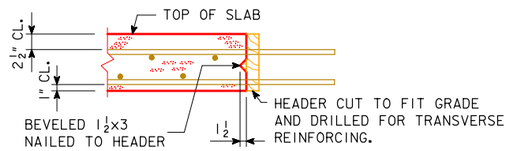

LONGITUDINAL SLAB CONSTRUCTION JOINT

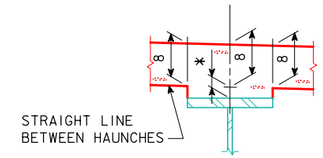

TYP. SLAB & HAUNCH DETAIL

* CONCRETE HAUNCH DIMENSION MEASURED BETWEEN BOTTOM OF SLAB AND TOP OF TOP FLANGE PLATE AS SHOWN ON THE "THEORETICAL CONCRETE HAUNCH DIAGRAM" SHOWN ELSEWHERE ON THESE PLANS.

THE MAXIMUM EMBEDMENT OF THE EDGE OF THE TOP FLANGE IN THE SLAB SHALL BE ½ INCH. SHEAR STUDS ARE TO HAVE A MINIMUM PENETRATION OF 2 INCHES INTO THE SLAB AND BE AT LEAST 2½ INCHES CLEAR OF THE TOP OF THE SLAB. THESE REQUIREMENTS WERE USED IN SETTING THE MAXIMUM AND MINIMUM ALLOWABLE FIELD HAUNCH VALUES SHOWN IN THE "MISCELLANEOUS DATA TABLE" SHOWN ELSEWHERE ON THESE PLANS.

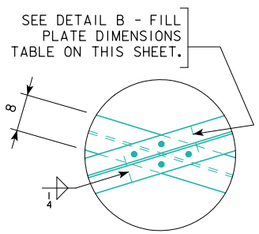

DETAIL B

UNIT 1

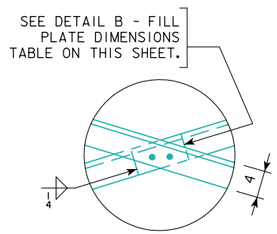

DETAIL B

UNITS 2-4

DETAIL B - FILL PLATE DIMENSIONS		
UNIT	INTERMEDIATE	INTERIOR PIERS
1	8 X ½	8 X 1
2	4 X ½	4 X 1
3	4 X ½	4 X 1
4	4 X ½	4 X 1

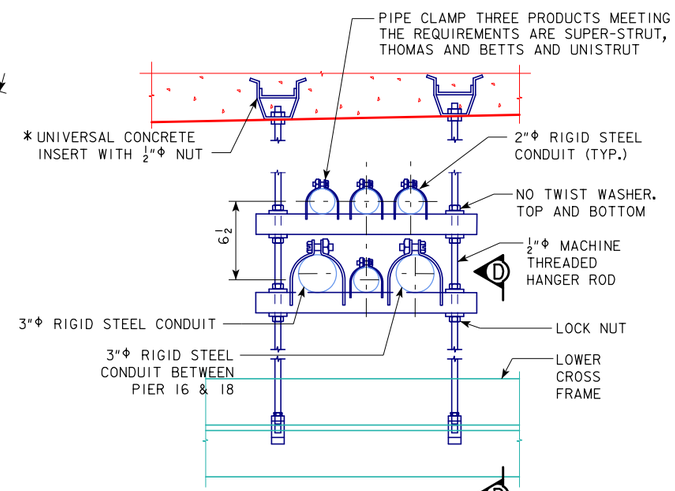

DETAIL C

NOTE:
FIVE ITS CONDUITS RUN FROM PIER 16 TO 20. ONLY 3 CONDUITS CONTINUE FROM PIER 20 TO 26 - ONLY TOP ROW OF CONDUITS SHOWN IN DETAIL D BETWEEN PIER 20 AND 26.

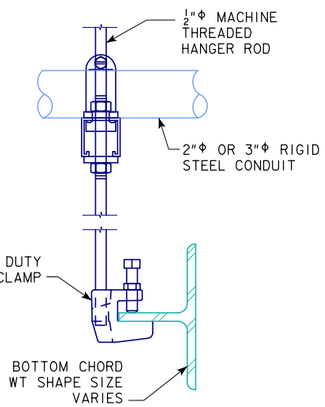

SECTION D-D

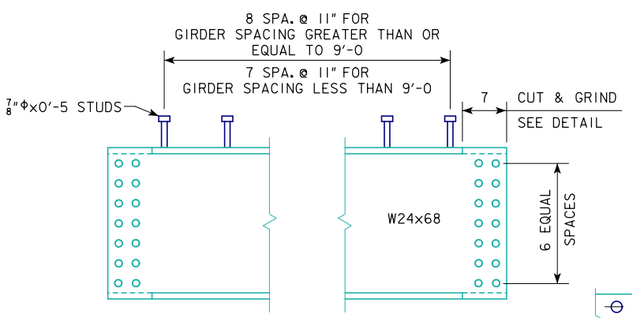

PIER 16, 21, 25, 28, AND ABUTMENT 32 DIAPHRAGM DETAIL

* INTERNALLY THREADED CONCRETE INSERTS SHALL BE GALVANIZED STEEL OR GALVANIZED MALLEABLE IRON AND SHALL CONFORM TO I.M. 453.09. CONCRETE INSERTS FOR HANGERS THAT SUPPORT CONDUIT, PIPING, AND JUNCTION BOXES SHALL BE CAST-IN-PLACE WITH A MINIMUM ALLOWABLE TENSION LOAD OF 500 LBS.

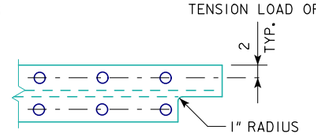

TYPICAL CUT & GRIND DETAIL

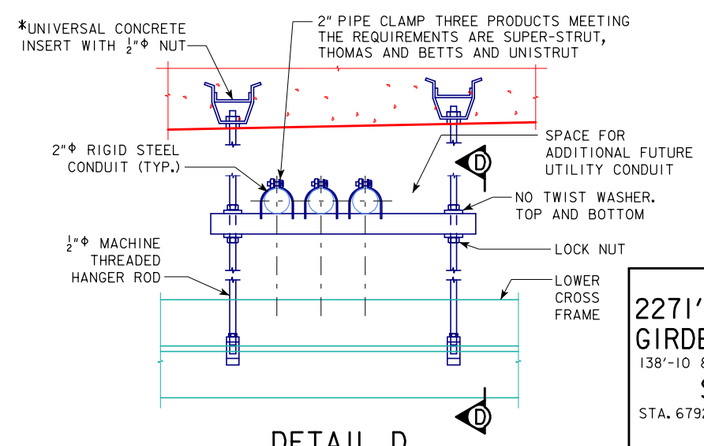

DETAIL D

SUPERSTRUCTURE NOTES:

THE FLOOR SLAB AS SHOWN IN THIS DESIGN INCLUDES ½" INTEGRAL WEARING SURFACE.

FORMS FOR THE SLAB AND BARRIER RAIL ARE TO BE SUPPORTED BY THE GIRDERS.

CLEAR DISTANCE FROM FACE OF CONCRETE TO NEAR REINFORCING BAR SHALL BE 2 INCHES UNLESS OTHERWISE NOTED OR SHOWN.

TOP TRANSVERSE REINFORCING STEEL IS TO BE PARALLEL TO AND 2½" CLEAR BELOW TOP OF SLAB. BOTTOM TRANSVERSE REINFORCING STEEL IS TO BE PARALLEL TO AND 1" CLEAR ABOVE BOTTOM OF SLAB. TOP AND BOTTOM REINFORCING STEEL IS TO BE SUPPORTED BY INDIVIDUAL EPOXY COATED METAL BAR CHAIRS SPACED AT NOT MORE THAN 3'-0 CENTERS LONGITUDINALLY AND TRANSVERSELY, OR BY CONTINUOUS ROWS OF EPOXY COATED METAL BAR HIGH CHAIRS OR SLAB BOLSTERS SPACED 4'-0 APART.

ALL FIELD CONNECTIONS ARE TO BE BOLTED USING "HIGH STRENGTH BOLTS". UNLESS OTHERWISE NOTED, ALL OPEN HOLES ARE TO BE 15/16" Φ AND ALL BOLTS ARE TO BE ⅞" Φ (U.N.O).

BOTTOM FLANGES ARE TO BE PERPENDICULAR TO WEBS AT THE REACTION POINTS.

FILL ℙ THICKNESS SHOWN ON PLANS ARE BASED ON NOMINAL GIRDER DIMENSIONS. THESE THICKNESSES ARE TO BE VERIFIED OR ADJUSTED DURING FABRICATION TO SECURE A CLOSE FIT. EACH FILL PLATE SHALL FIT TO THE NEAREST 1/16" IN THICKNESS AND SINGLE PLATES ARE REQUIRED AT EACH FILL LOCATION. GIRDERS ARE TO BE TRULY SQUARE AT SPLICE POINTS WITH FLANGES PERPENDICULAR TO WEBS.

THE DESIGN DRAWINGS INDICATE AWS PREQUALIFIED WELDED JOINTS. ALTERNATE JOINT DETAILS MAY BE SUBMITTED FOR APPROVAL.

MAGNETIC PARTICLE INSPECTION OF WELDS, IN ACCORDANCE WITH THE STANDARD SPECIFICATIONS, WILL BE REQUIRED.

SHOP WELDED FLANGE SPLICES SHALL BE A MINIMUM OF 6 INCHES FROM A STIFFENER, 6 INCHES FROM A WEB SPLICE, AND 4 INCHES FROM A SHEAR CONNECTOR. WEB SPLICES SHALL BE A MINIMUM OF 6 INCHES FROM A STIFFENER. SPLICES SHALL NOT INTERFERE WITH ANY OTHER BRIDGE COMPONENTS. ALL SHOP WELDED BUTT SPLICES SHALL BE SHOWN ON THE SHOP DRAWINGS AND SUBJECT TO APPROVAL BY THE ENGINEER.

WELDED SHOP WEB AND FLANGE SPLICES MAY BE PERMITTED WHEN DETAILED ON THE SHOP DRAWINGS AND APPROVED BY THE ENGINEER. NO ADDITIONAL PAYMENT WILL BE MADE FOR OPTIONAL WEB AND FLANGE SPLICES ADDED FOR THE CONTRACTOR'S CONVENIENCE.

AT LOCATIONS WHERE ONE OR MORE GIRDERS ARE HORIZONTALLY CURVED, CHARPY V-NOTCH TOUGHNESS REQUIREMENTS IN ACCORDANCE WITH ARTICLE 4152.02, OF THE STANDARD SPECIFICATIONS SHALL APPLY TO ALL CROSS FRAMES AND CONNECTION STIFFENERS AT CROSS FRAMES FOR THE FULL TRANSVERSE WIDTH OF THE BRIDGE.

WELDING OF ANCHOR BOLTS SHALL NOT BE ALLOWED. THE CONTRACTOR SHALL OBTAIN A TEMPLATE FROM THE MANUFACTURER / FABRICATOR FOR PROPER PLACEMENT OF THE ANCHOR BOLTS.

SEE DESIGN SHEET 3 FOR JACKING NOTES.

SEE DESIGN SHEET 97 FOR WEATHERING STEEL NOTES.

whks
engineers + planners + land surveyors

DESIGN FOR VARIABLE SKEW (L.A.)

2271'-6 x VARI. CONTINUOUS WELDED GIRDER BRIDGE-EBL W/14' BIKE TRAIL

138'-10 & 151'-0⅞ END SPANS MULTIPLE LENGTH INTERIOR SPANS

SUPERSTRUCTURE DETAILS

STA. 6792+60.93 - 52' LEFT ℄ I-74 OCTOBER, 2015

SCOTT COUNTY

IOWA DEPARTMENT OF TRANSPORTATION - HIGHWAY DIVISION

DESIGN SHEET NO. 147 OF 282 FILE NO. 30253 DESIGN NO. 3408

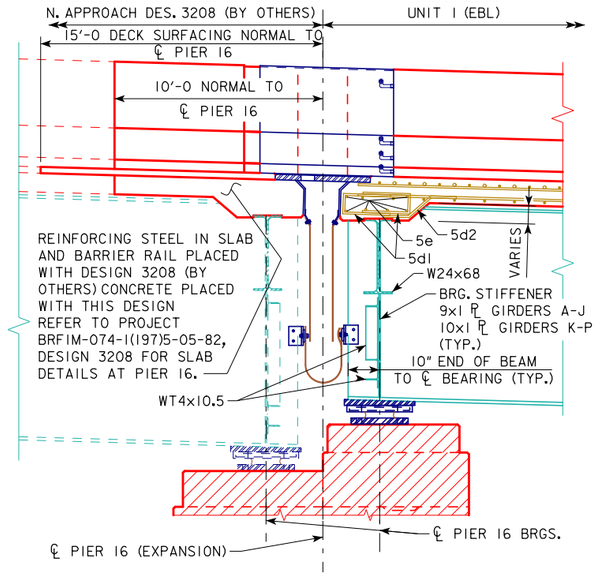

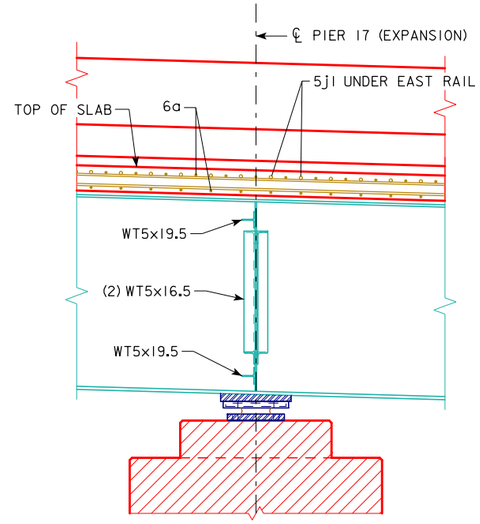

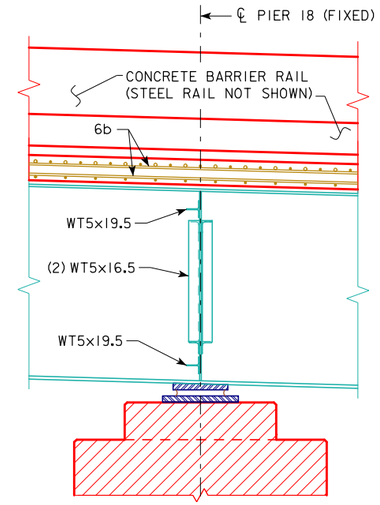

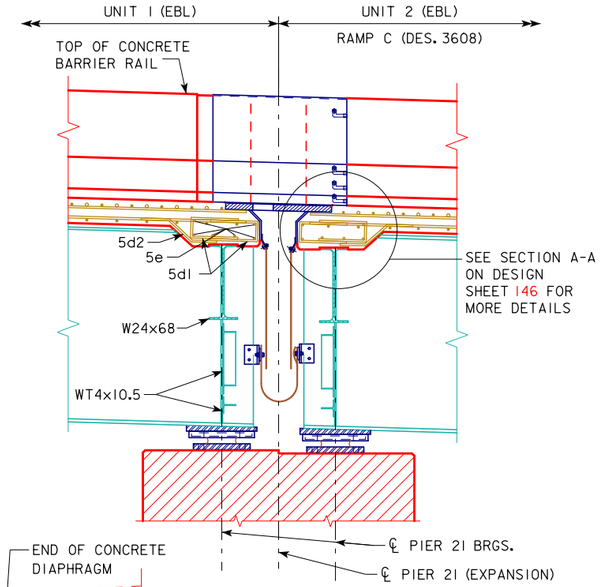

PART LONGITUDINAL SECTION NEAR GUTTER LINE

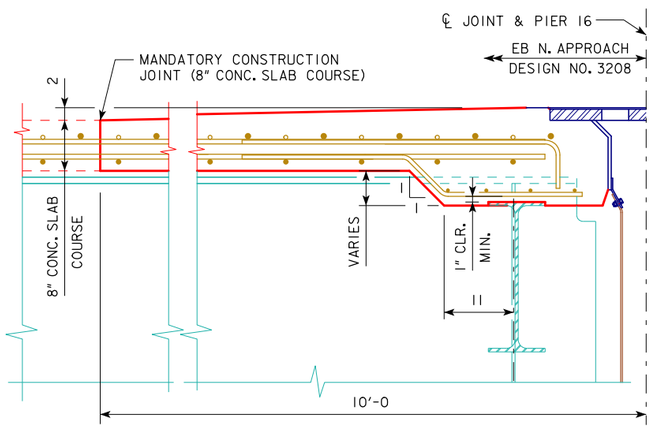

DETAIL AT BIKE PATH SOUTH OF PIER 16

(NORMAL TO PIER)

NOTE:

REINFORCING BARS SOUTH OF PIER 16 FINGER JOINT PROVIDED BY OTHERS.
REFER TO PROJECT BRFIM-074-1(197)5-05-82, DESIGN 3208

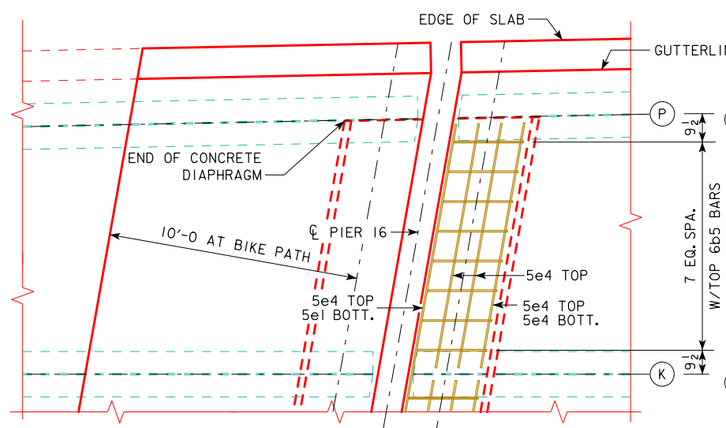

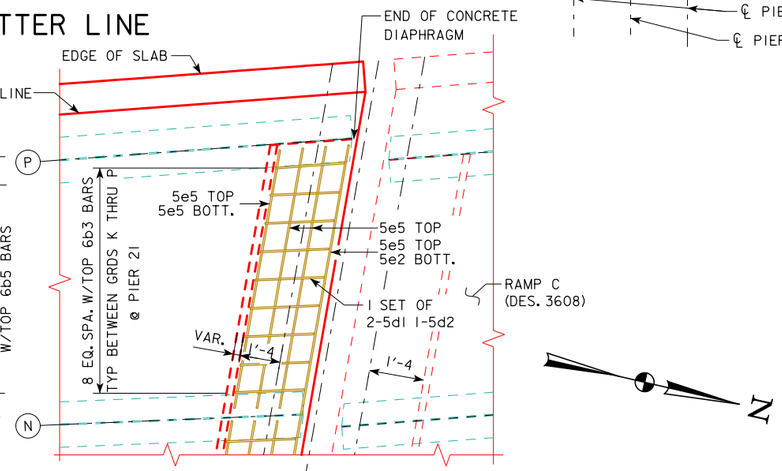

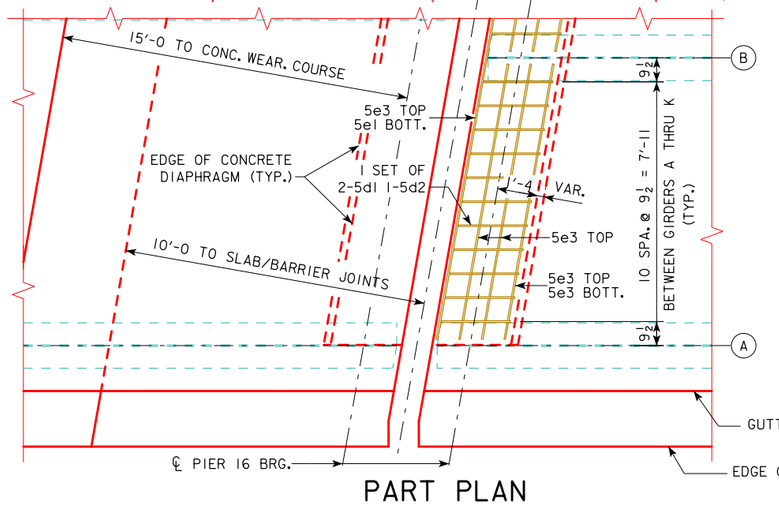

PART PLAN

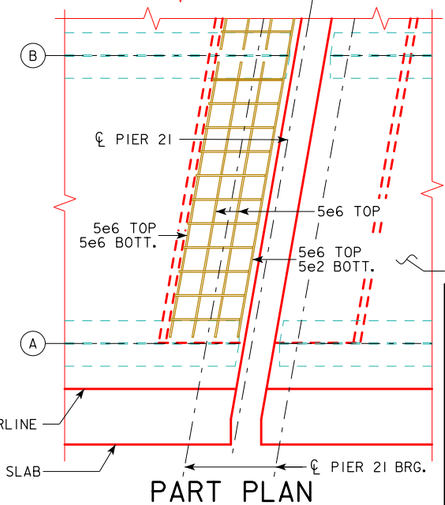

PART PLAN

NOTE:
EXPANSION DEVICE NOT SHOWN IN PLAN VIEW.

NOTE:
SEE DESIGN SHEET 147 FOR DETAILS AND SUPERSTRUCTURE NOTES.

SEE DESIGN SHEETS 74-76 FOR FRAMING PLAN.

SEE DESIGN SHEETS 164-167 FOR LONGITUDINAL REINFORCING LAYOUT.

whks
engineers + planners + land surveyors

DESIGN FOR VARIABLE SKEW (L.A.)

2271'-6 x VARI. CONTINUOUS WELDED GIRDER BRIDGE-EBL W/14' BIKE TRAIL

138'-10 & 151'-0⅞ END SPANS MULTIPLE LENGTH INTERIOR SPANS

LONGITUDINAL SECTION-UNIT 1

STA. 6792+60.93 - 52' LEFT ℄ I-74 OCTOBER, 2015

SCOTT COUNTY

IOWA DEPARTMENT OF TRANSPORTATION - HIGHWAY DIVISION

DESIGN SHEET NO. 148 OF 282 FILE NO. 30253 DESIGN NO. 3408

DESIGN TEAM MG / BB / CF	SCOTT COUNTY	PROJECT NUMBER BRFIM-074-1(200)5--05-82	SHEET NUMBER 149

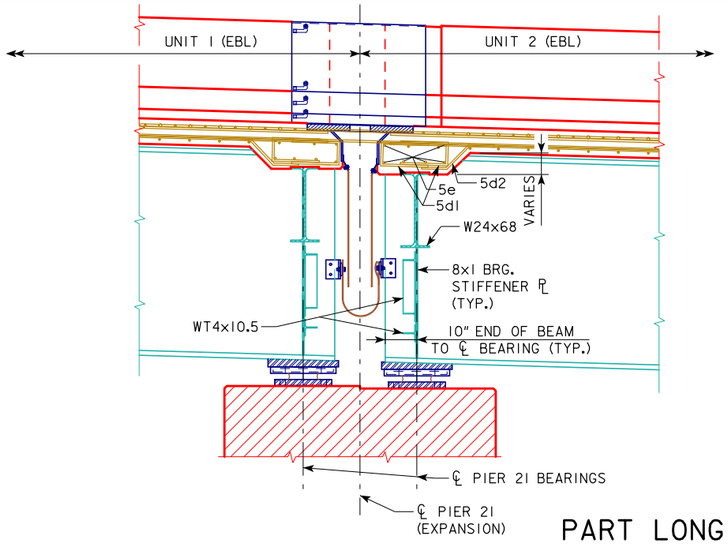

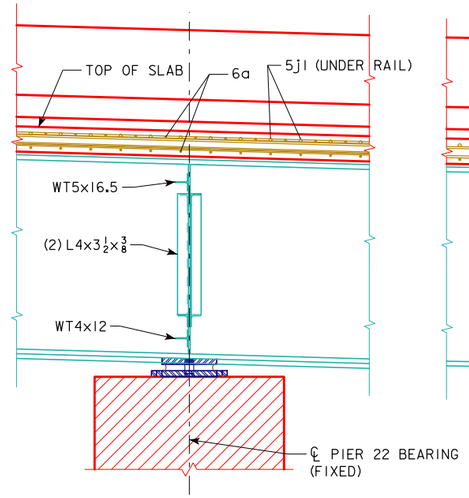

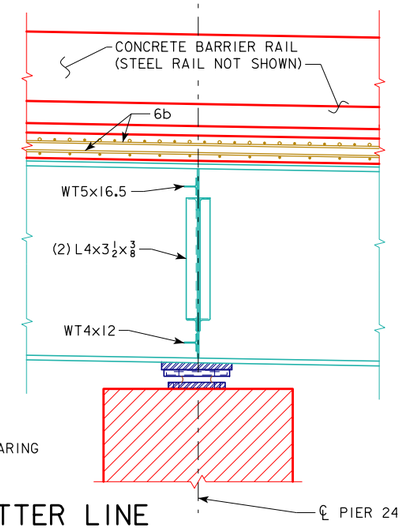

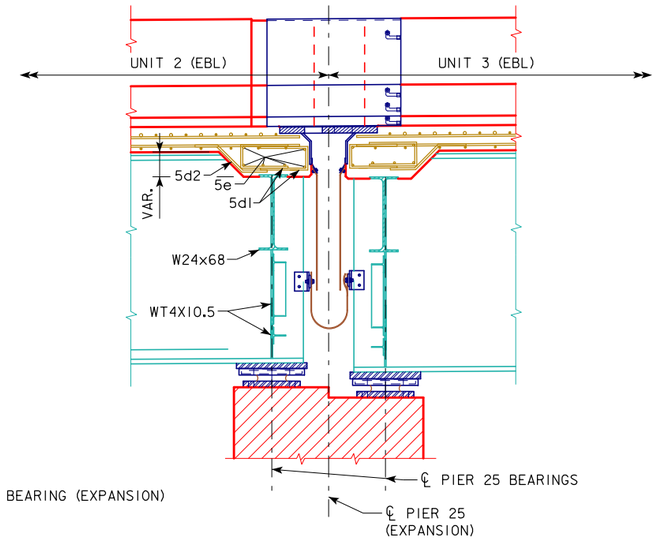

PART LONGITUDINAL SECTION NEAR GUTTER LINE

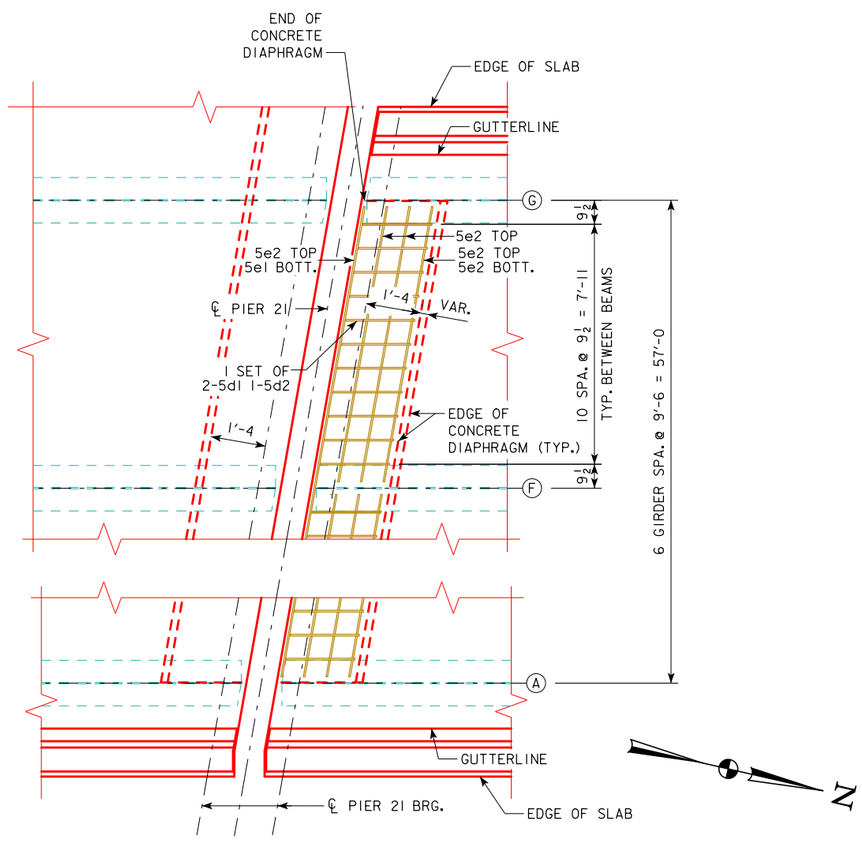

PART PLAN

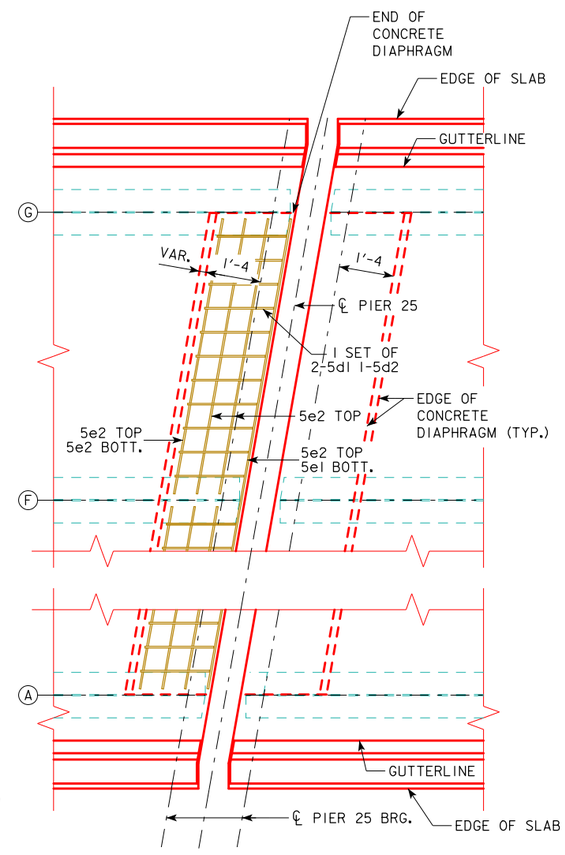

PART PLAN

NOTE:
EXPANSION DEVICE NOT SHOWN IN PLAN VIEW.

NOTE:
SEE DESIGN SHEET 147 FOR DETAILS AND SUPERSTRUCTURE NOTES.

SEE DESIGN SHEET 77 FOR FRAMING PLAN.

whks
engineers + planners + land surveyors

DESIGN FOR VARIABLE SKEW (L.A.)

2271'-6 x VARI. CONTINUOUS WELDED GIRDER BRIDGE-EBL W/14' BIKE TRAIL

138'-10 & 151'-0⅞ END SPANS MULTIPLE LENGTH INTERIOR SPANS

LONGITUDINAL SECTION-UNIT 2

STA. 6792+60.93 - 52' LEFT ℄ I-74 OCTOBER, 2015

SCOTT COUNTY

IOWA DEPARTMENT OF TRANSPORTATION - HIGHWAY DIVISION

DESIGN SHEET NO. 149 OF 282 FILE NO. 30253 DESIGN NO. 3408

DESIGN TEAM MG / BB / CF	SCOTT COUNTY	PROJECT NUMBER BRFIM-074-1(200)5--05-82	SHEET NUMBER 150

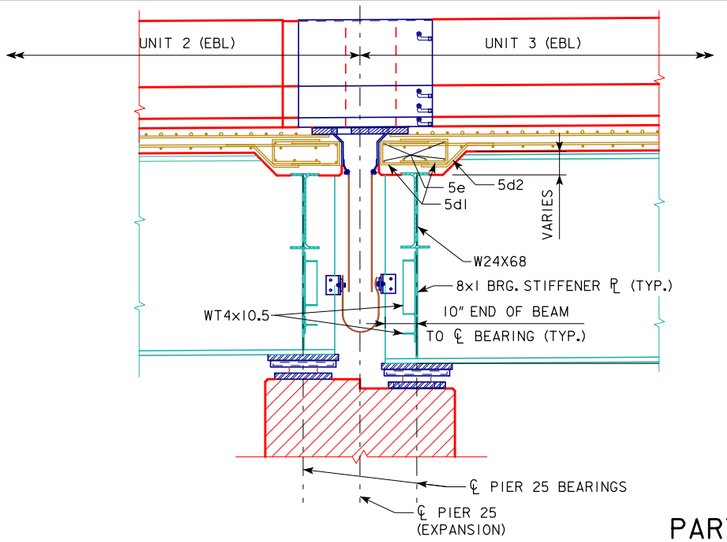

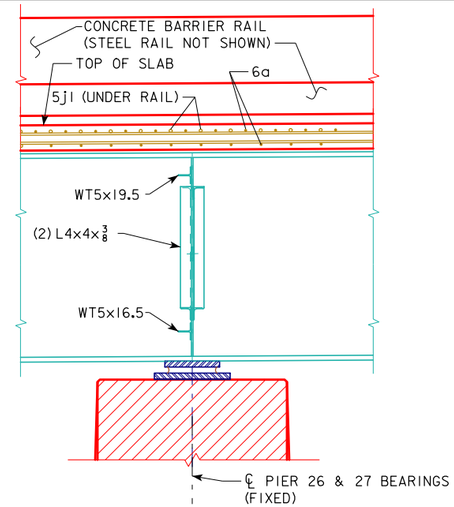

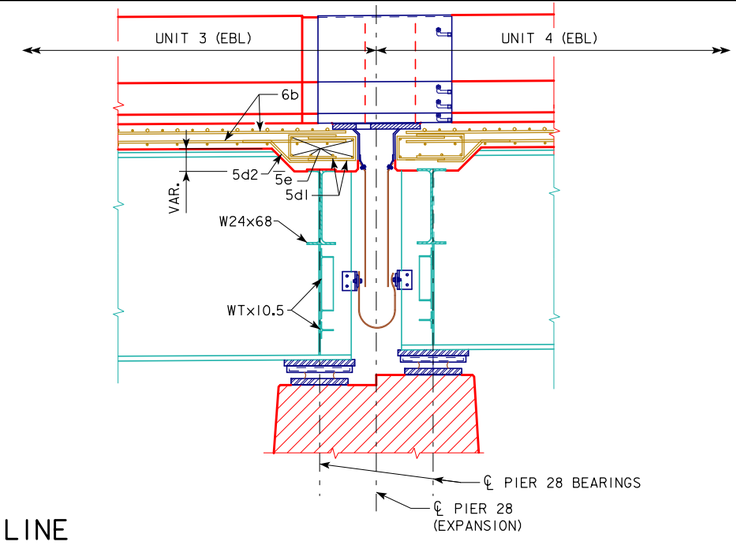

PART LONGITUDINAL SECTION NEAR GUTTER LINE

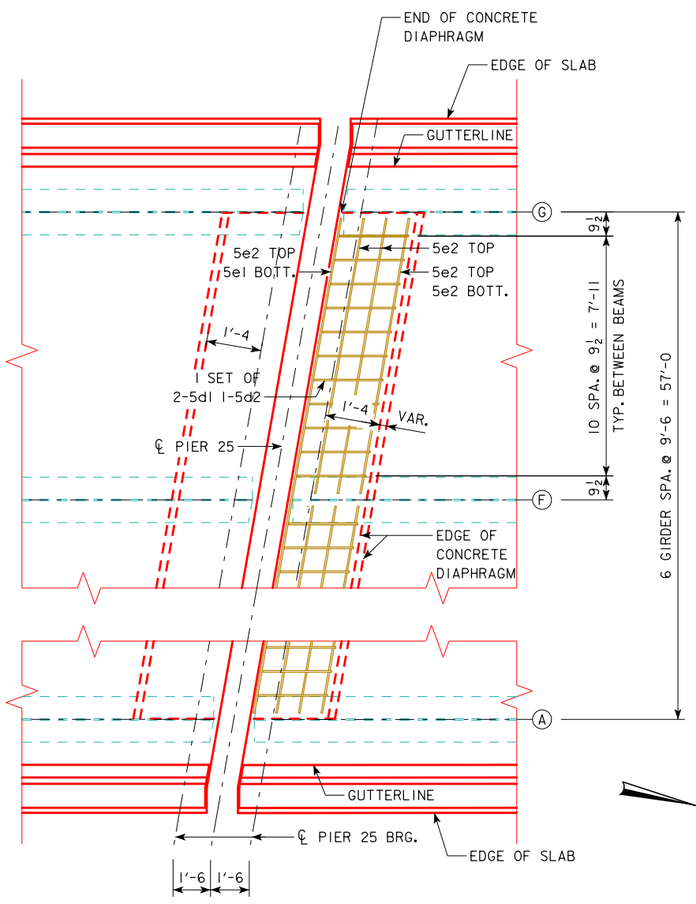

PART PLAN

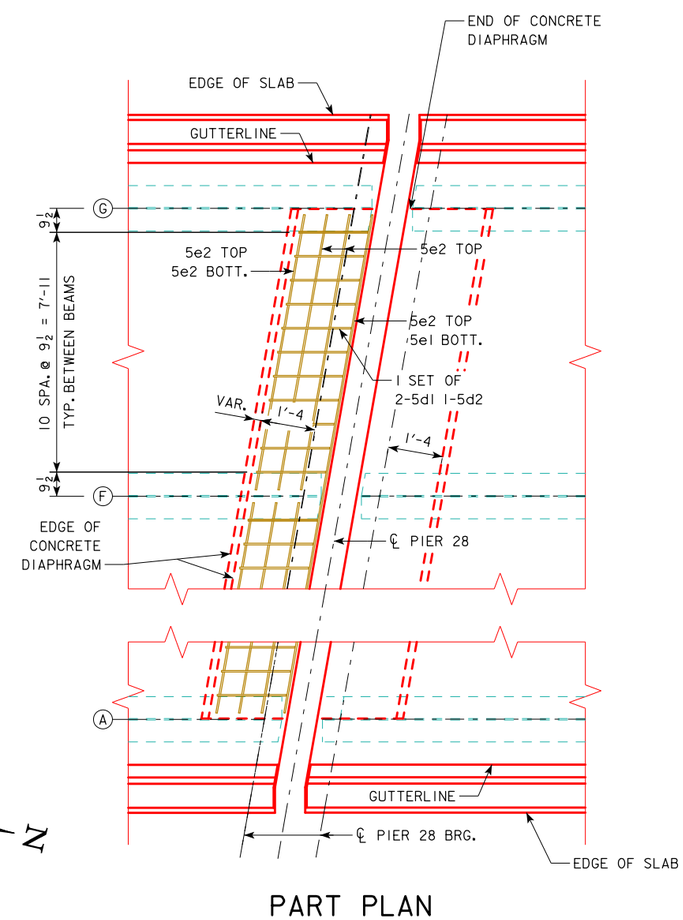

PART PLAN

NOTE:
SEE DESIGN SHEET 147 FOR DETAILS AND SUPERSTRUCTURE NOTES.

SEE DESIGN SHEET 78 FOR FRAMING PLAN.

whks
engineers + planners + land surveyors

DESIGN FOR VARIABLE SKEW (L.A.)

2271'-6 x VARI. CONTINUOUS WELDED GIRDER BRIDGE-EBL W/14' BIKE TRAIL

138'-10 & 151'-0 7/8 END SPANS MULTIPLE LENGTH INTERIOR SPANS

LONGITUDINAL SECTION-UNIT 3

STA. 6792+60.93 - 52' LEFT ℄ I-74 OCTOBER, 2015

SCOTT COUNTY

IOWA DEPARTMENT OF TRANSPORTATION - HIGHWAY DIVISION

DESIGN SHEET NO. 150 OF 282 FILE NO. 30253 DESIGN NO. 3408

DESIGN TEAM MG / BB / CF	SCOTT COUNTY	PROJECT NUMBER BRFIM-074-1(200)5--05-82	SHEET NUMBER 151

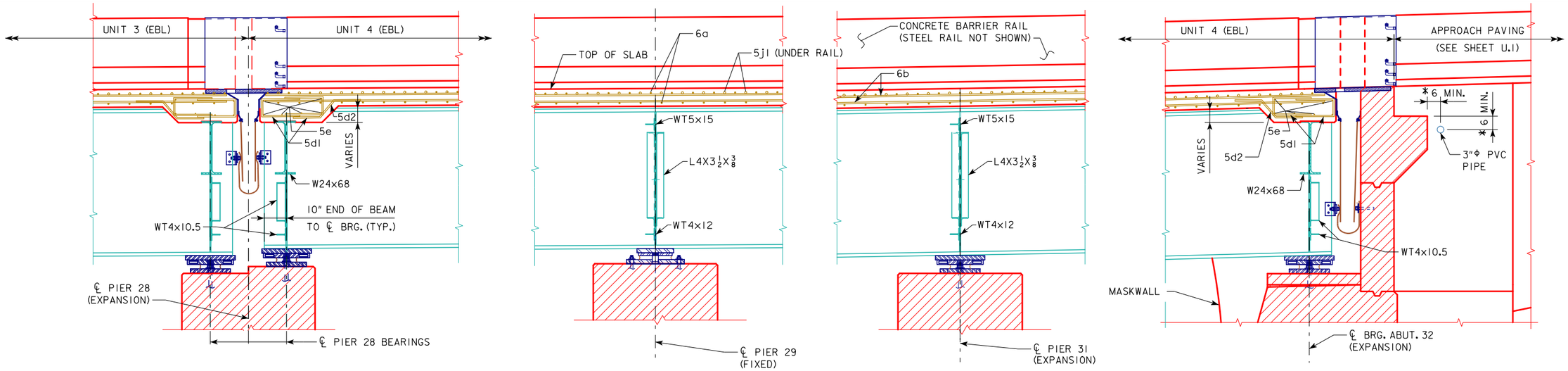

PART LONGITUDINAL SECTION NEAR GUTTER LINE

* PLACE TO MISS REINFORCING BARS AND ADJUST LOCATION IF REQUIRED, SO THAT THE PVC PIPE IS NOT COINCIDENT WITH A CURVED EDGE OF SURFACE CHANGE ON THE MASKWALL FACE.

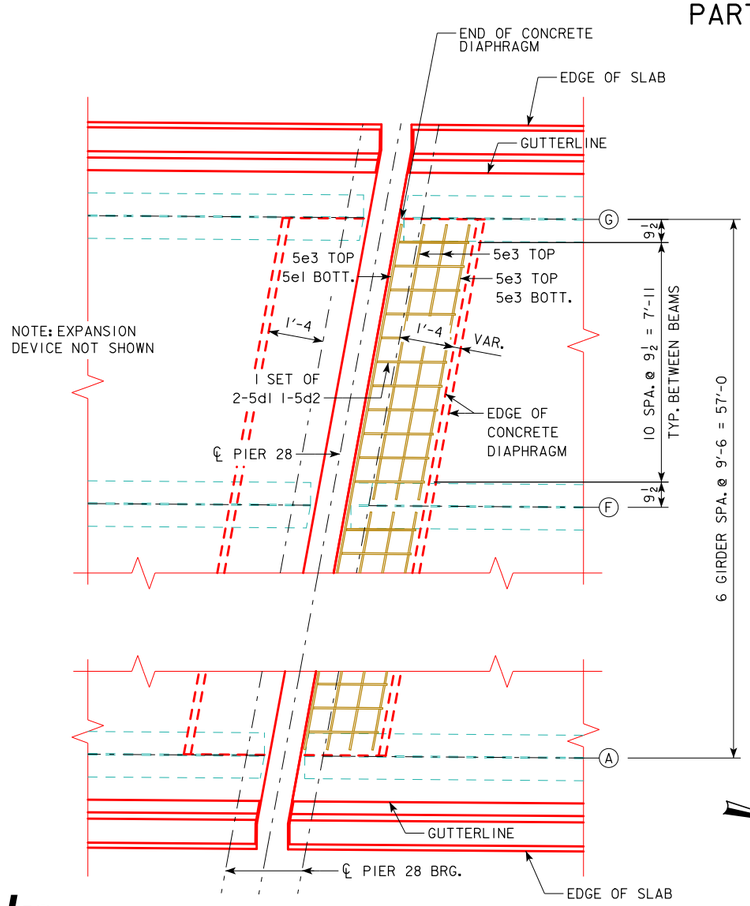

PART PLAN

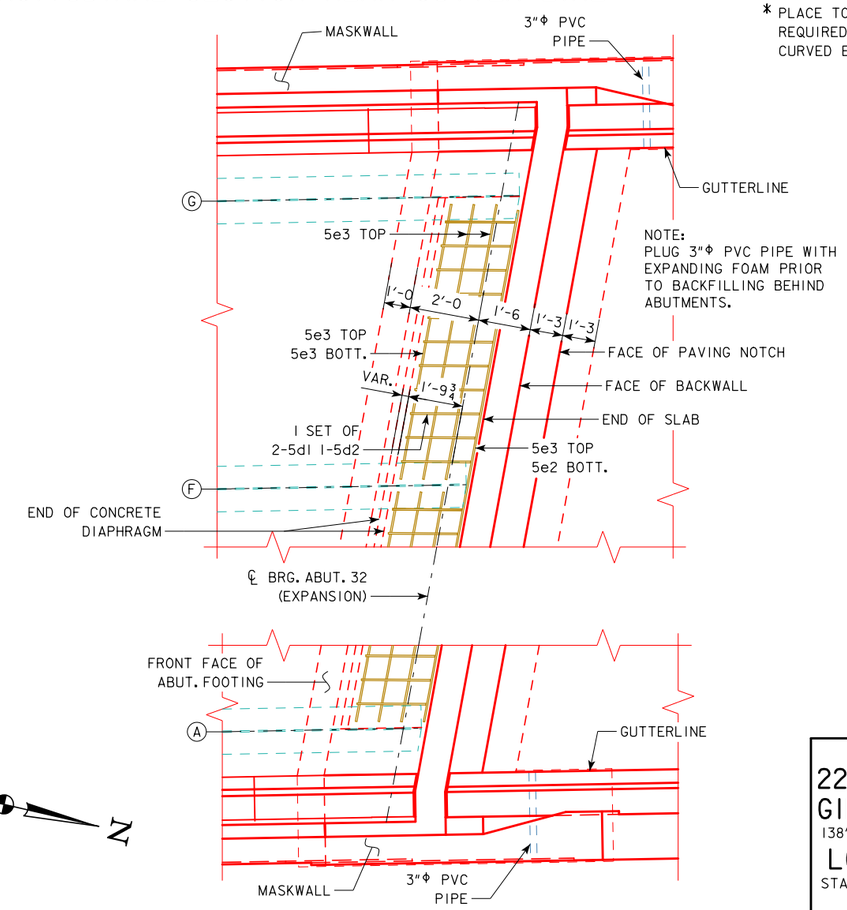

PART PLAN

NOTE:
SEE DESIGN SHEET 147 FOR DETAILS AND SUPERSTRUCTURE NOTES.

SEE DESIGN SHEET 79 & 80 FOR FRAMING PLAN.

whks
engineers + planners + land surveyors

DESIGN FOR VARIABLE SKEW (L.A.)

2271'-6 x VARI. CONTINUOUS WELDED GIRDER BRIDGE-EBL W/14' BIKE TRAIL

138'-10 & 151'-0⅞ END SPANS MULTIPLE LENGTH INTERIOR SPANS

LONGITUDINAL SECTION - UNIT 4

STA. 6792+60.93 - 52' LEFT ℄ I-74 OCTOBER, 2015

SCOTT COUNTY

IOWA DEPARTMENT OF TRANSPORTATION - HIGHWAY DIVISION

DESIGN SHEET NO. 151 OF 282 FILE NO. 30253 DESIGN NO. 3408

DESIGN TEAM CF / BB / MG	SCOTT COUNTY	PROJECT NUMBER BRFIM-074-1(200)5--05-82	SHEET NUMBER 152

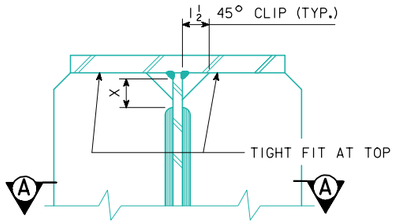

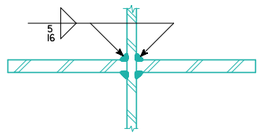

SECTION A-A

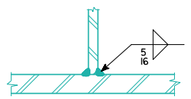

SECTION B-B

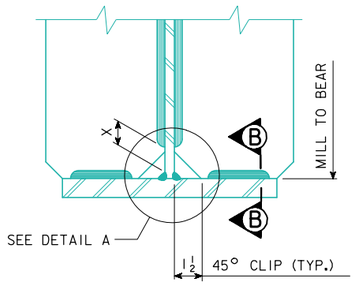

JACKING AND BEARING STIFFENERS
(DIAPHRAGMS PARALLEL TO ℄ OF PIER OR ABUTMENT)

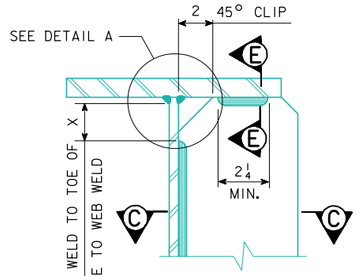

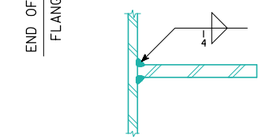

SECTION C-C

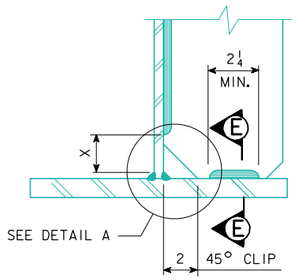

INTERMEDIATE
DIAPHRAGM STIFFENER
WELDED ATTACHMENT
TO FLANGES

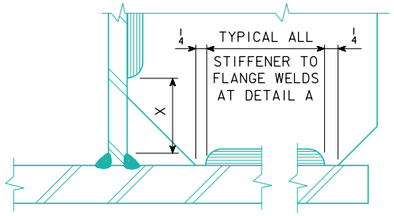

DETAIL A

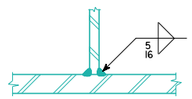

SECTION E-E

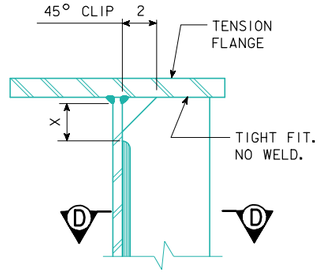

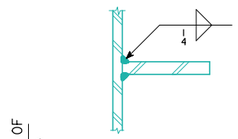

SECTION D-D

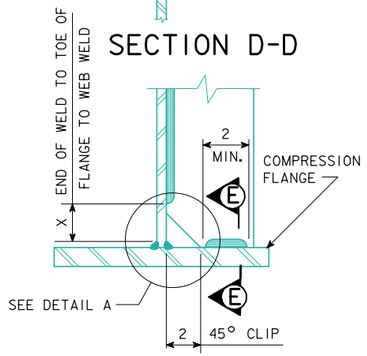

INTERMEDIATE STIFFENER
UNITS 1, 2 & 3

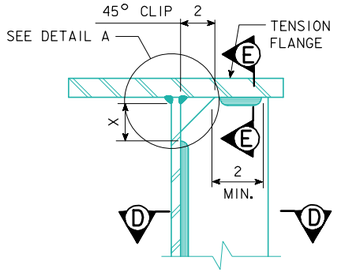

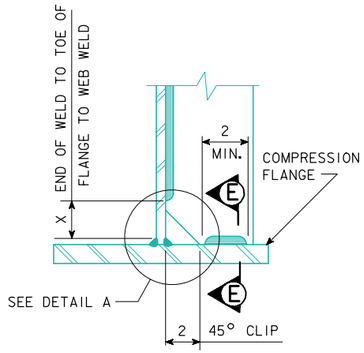

INTERMEDIATE STIFFENER
UNIT 4

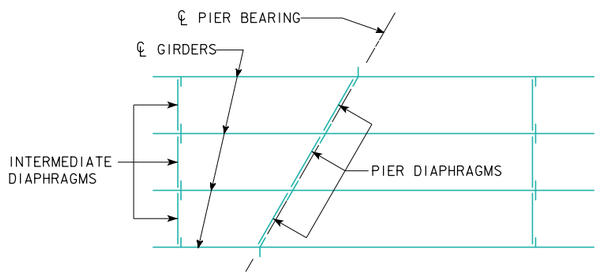

PART PLAN OF DIAPHRAGM FRAMING

TABLE OF STIFFENER DIMENSIONS				
UNIT	BEARING STIFFENERS	JACKING STIFFENERS	INTERMEDIATE STIFFENERS	INTERM. DIAPH. STIFFENERS
1 (GIRDERS A-J)	9 X 1	9 X 1	5 X 1/2	9 X 1/2
1 (GIRDERS K-P)	10 X 1	9 X 1	5 X 1/2	10 X 1/2
2	8 X 1	8 X 1	5 X 1/2	8 X 1/2
3	8 X 1	8 X 1	5 X 1/2	8 X 1/2
4	7 X 1	7 X 1	5 X 1/2	7 X 1/2

T - WEB THICKNESS	X = 5T WITH 2 1/4" MINIMUM
7/16	2 1/4
1/2	2 1/2
9/16	2 13/16
5/8	3 1/8
11/16	3 7/16
3/4	3 3/4

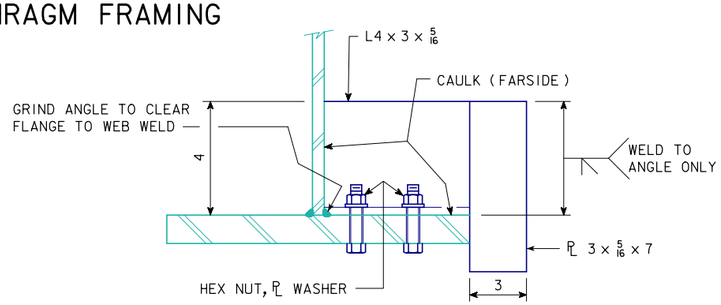

SECTION G-G

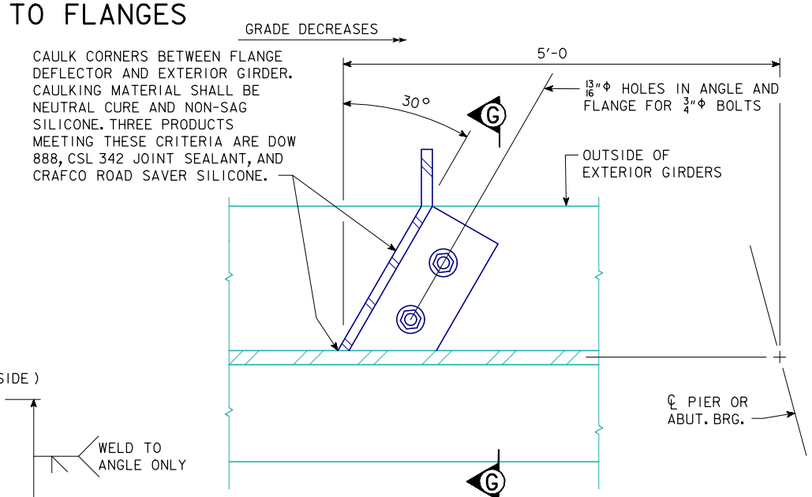

FLANGE DEFLECTOR DETAILS
(30 TOTAL REQUIRED)
(10 - UNIT 1)
(6 - UNIT 2)
(6 - UNIT 3)
(8 - UNIT 4)

FLANGE DEFLECTORS ARE REQUIRED ON THE OUTSIDE OF THE EXTERIOR GIRDERS AT THE UPSLOPE SIDE OF EACH PIER.

NOTES:
THIS SHEET IS PRIMARILY FOR THE USE OF FABRICATOR'S WORKMEN AND IOWA DEPARTMENT OF TRANSPORTATION INSPECTORS IN INTERPRETING PLAN DETAILS. IT COVERS THE LOCATIONS OF WELD TERMINI THAT ARE NOT SPECIFIED BY TYPICAL WELD SYMBOLS.
SEE DESIGN SHEET 97 FOR FLANGE TO WEB DETAILS.

DESIGN FOR VARIABLE SKEW (L.A.)
2271'-6 x VARI. CONTINUOUS WELDED GIRDER BRIDGE-EBL W/14' BIKE TRAIL
138'-10 & 151'-0 7/8 END SPANS MULTIPLE LENGTH INTERIOR SPANS
WELDING DETAILS
STA. 6792+60.93 - 52' LEFT ℄ I-74 OCTOBER, 2015
SCOTT COUNTY
IOWA DEPARTMENT OF TRANSPORTATION - HIGHWAY DIVISION
DESIGN SHEET NO. 152 OF 282 FILE NO. 30253 DESIGN NO. 3408

REVISED 09-03 - CHANGES SECTION G-G.
ENGLISHBEAMS.DGN 1021 - THIS SHEET ISSUED 11-3-88.

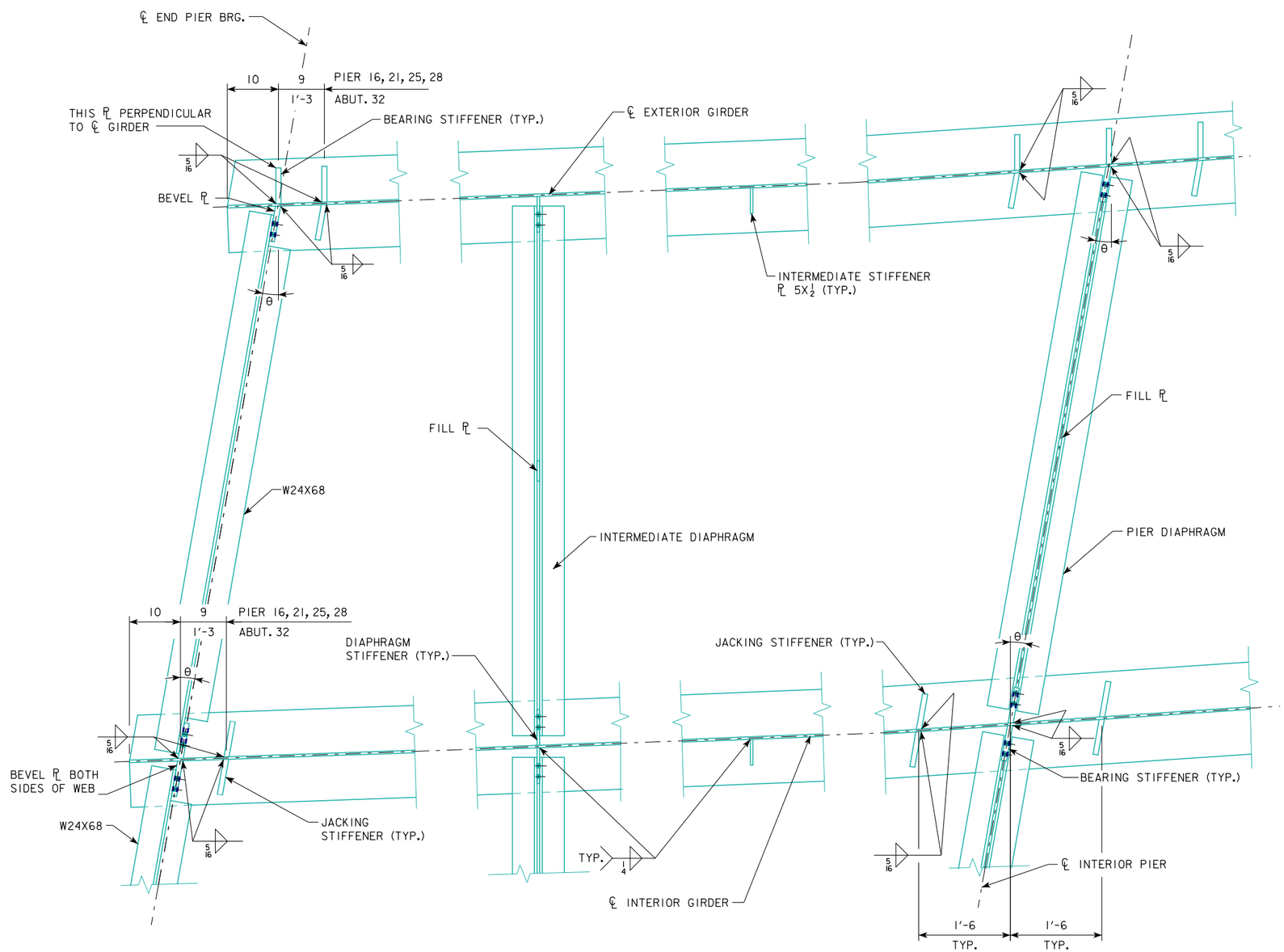

PART PLAN - STIFFENER DETAILS

TABLE OF BEARING STIFFENER ANGLES

LOCATION	GIRDER	θ
PIER 16 - UNIT 1 EB	A - K	10°00'00"
PIER 16 - UNIT 1 EB	P	11°08'45"
PIER 17	A - K	10°00'00"
PIER 17	L	10°20'42"
PIER 17	P	11°08'45"
PIER 18	A - K	10°00'00"
PIER 18	L	10°20'42"
PIER 18	P	11°28'03"
PIER 19	A - K	10°00'00"
PIER 19	L	10°20'42"
PIER 19	M	11°00'51"
PIER 19	P	12°28'56"
PIER 20	A - K	10°00'00"
PIER 20	L	10°20'42"
PIER 20	M	11°00'51"
PIER 20	N	12°22'02"
PIER 20	P	13°22'38"
PIER 21 - UNIT 1 EB	A - K	10°00'00"
PIER 21 - UNIT 1 EB	L	10°20'42"
PIER 21 - UNIT 1 EB	M	11°00'51"
PIER 21 - UNIT 1 EB	N	12°22'02"
PIER 21 - UNIT 1 EB	P	14°16'11"
PIER 21 - UNIT 2 EB	ALL	10°00'00"
PIER 22	ALL	10°00'00"
PIER 23	ALL	10°00'00"
PIER 24	ALL	10°00'00"
PIER 25 - UNIT 2 EB	ALL	10°00'00"
PIER 25 - UNIT 3 EB	ALL	10°00'00"
PIER 26	ALL	10°00'00"
PIER 27	ALL	10°00'00"
PIER 28 - UNIT 3 EB	ALL	10°00'00"
PIER 28 - UNIT 4 EB	ALL	10°00'00"
PIER 29	ALL	10°00'00"
PIER 30	ALL	10°13'26"
PIER 31	ALL	10°49'48"
ABUTMENT 32	ALL	11°26'57"

whks
engineers + planners + land surveyors

DESIGN FOR VARIABLE SKEW (L.A.)

2271'-6 x VARI. CONTINUOUS WELDED GIRDER BRIDGE-EBL W/14' BIKE TRAIL

138'-10 & 151'-0 7/8 END SPANS MULTIPLE LENGTH INTERIOR SPANS

WELDING DETAILS

STA. 6792+60.93 - 52' LEFT ℄ I-74 OCTOBER, 2015

SCOTT COUNTY

IOWA DEPARTMENT OF TRANSPORTATION - HIGHWAY DIVISION

DESIGN SHEET NO. 153 OF 282 FILE NO. 30253 DESIGN NO. 3408

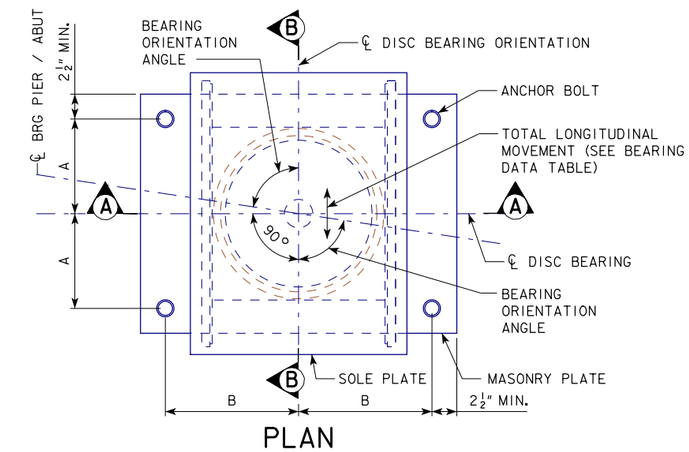

PLAN

NOTES:
℄ DISC BEARING ORIENTATION LINE DOES NOT NECESSARILY COINCIDE WITH ℄ GIRDER FOR GUIDED EXPANSION BEARINGS.

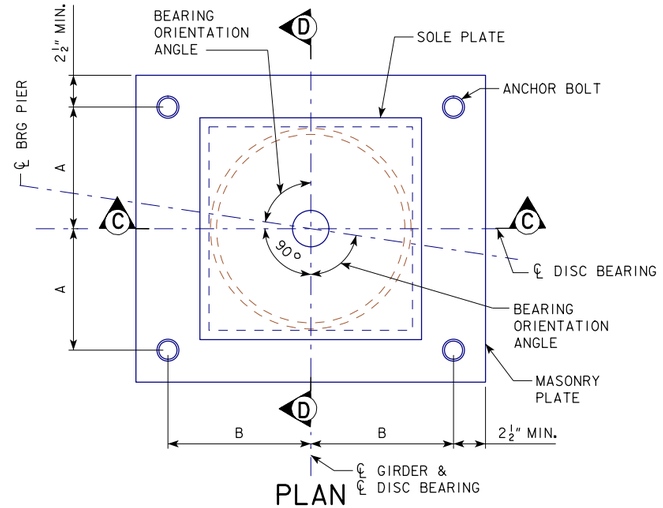

PLAN

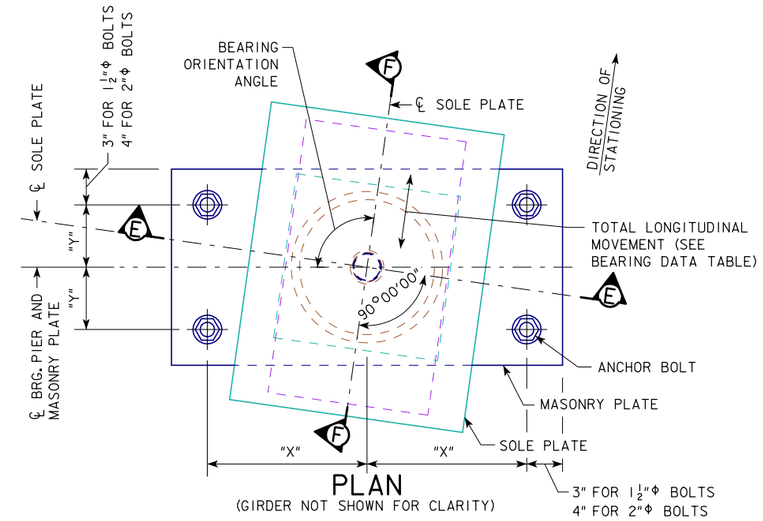

PLAN
(GIRDER NOT SHOWN FOR CLARITY)

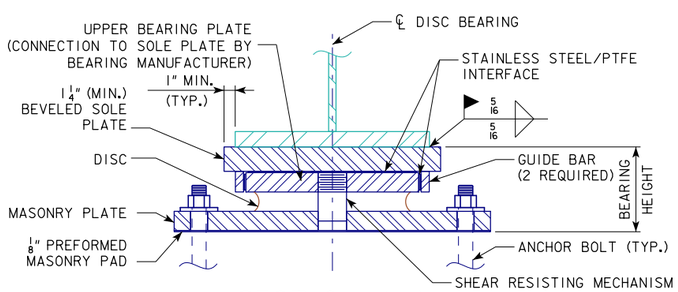

SECTION A-A

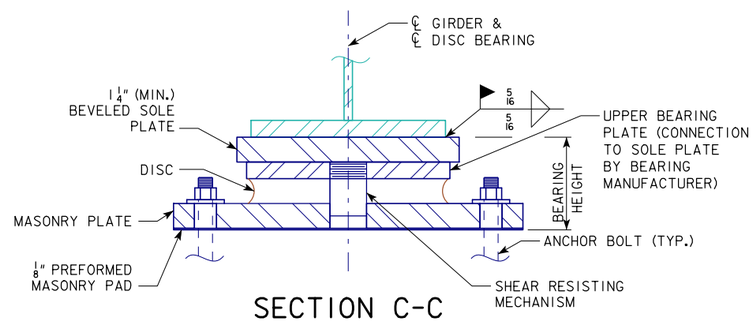

SECTION C-C

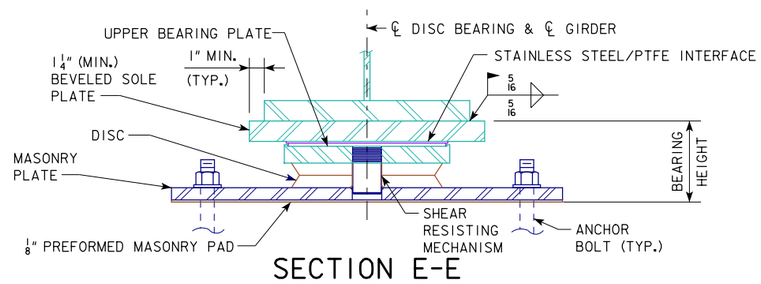

SECTION E-E

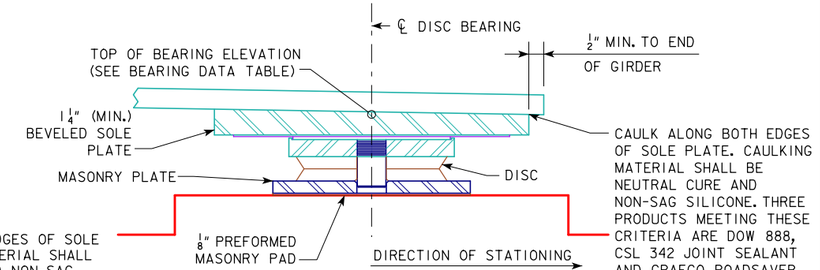

SECTION F-F
(SHOWING NEGATIVE LONGITUDINAL SLOPE)

NON-GUIDED EXPANSION BEARING - TYPE MD

NOTE:

SEE DESIGN SHEETS 155-159 FOR NOTES AND BEARING DATA TABLES.

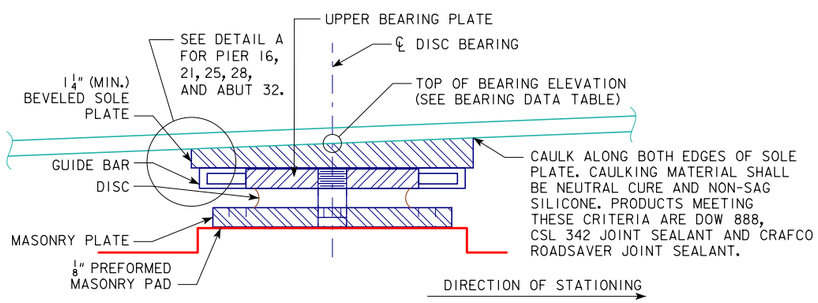

SECTION B-B
(SHOWING POSITIVE LONGITUDINAL SLOPE)

GUIDED EXPANSION BEARING DETAILS

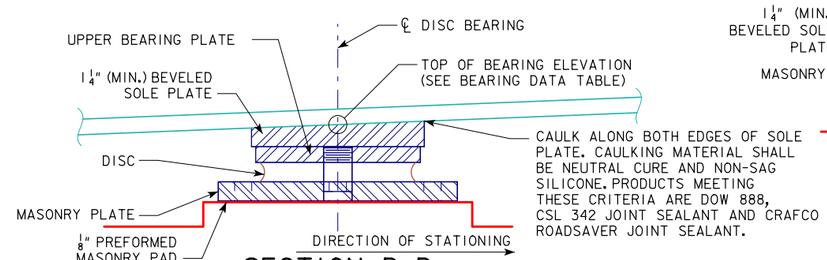

SECTION D-D
(SHOWING POSITIVE LONGITUDINAL SLOPE)

FIXED BEARING DETAILS

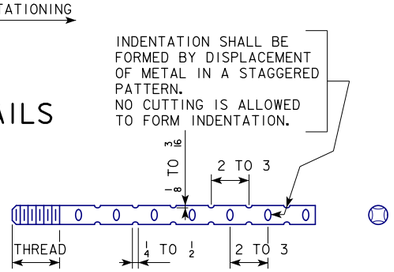

ANCHOR BOLT SWEDGE DETAIL

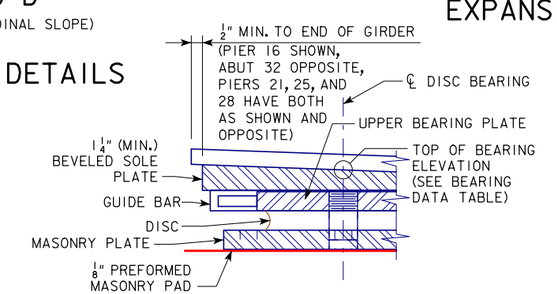

DETAIL A

whks
engineers + planners + land surveyors

DESIGN FOR VARIABLE SKEW (L.A.)

227'-6 x VARI. CONTINUOUS WELDED GIRDER BRIDGE-EBL W/14' BIKE TRAIL

138'-10 & 151'-0⅞ END SPANS MULTIPLE LENGTH INTERIOR SPANS

BEARING DETAILS

STA. 6792+60.93 - 52' LEFT ℄ I-74 OCTOBER, 2015

SCOTT COUNTY

IOWA DEPARTMENT OF TRANSPORTATION - HIGHWAY DIVISION

DESIGN SHEET NO. 154 OF 282 FILE NO. 30253 DESIGN NO. 3408

BENCH MARK NO. 500: STA. 6781+18.92 LT. 161.19'
ELEV. 575.797, CHISELED "X" IN BOLT E. SIDE
CONCRETE STRUCTURE

BEARING DATA TABLE

LOCATION	BEARING TYPE	GIRDER	* TOP OF BEARING ELEVATION	LONGITUDINAL SLOPE OF SOLE PLATE	BEARING HEIGHT	VERTICAL LOAD STRENGTH MAX.	VERTICAL LOAD STRENGTH MIN.	VERTICAL LOAD SERVICE MAX.	VERTICAL LOAD SERVICE MIN.	HORIZONTAL LOAD STRENGTH TRANSV.	HORIZONTAL LOAD STRENGTH LONGIT.	HORIZONTAL LOAD SERVICE TRANSV.	HORIZONTAL LOAD SERVICE LONGIT.	HORIZONTAL LOAD EXTREME EVENT TRANSV.	HORIZONTAL LOAD EXTREME EVENT LONGIT.	TOTAL LONGIT. MOVEMENT	** MAX DESIGN ROTATION	BEARING ORIENTATION ANGLE	ANCHOR BOLTS DIM. "A"	ANCHOR BOLTS DIM. "B"	ANCHOR BOLTS NUMBER AND SIZE
				(%)	(IN.)	(KIP)	(KIP)	(KIP)	(KIP)	(KIP)	(KIP)	(KIP)	(KIP)	(KIP)	(KIP)	(IN.)	(RAD.)		(IN.)		(EA. BRG.)
PIER 16	MD	P	610.15	-2.8%	8.25	381	0	286	28	0	0	0	0	0	0	5.72	0.020	79°23'49''	5	1'-1½	4-1½" Dia.
	GUIDED EXPANSION	N	---							5.3	4.8	2.6	4.8	24.8	4.8						
		M	---																		
		L	---																		
		K	610.36																		
		J	610.57																		
		H	610.81																		
		G	611.05																		
		F	611.28																		
		E	611.52																		
		D	611.76																		
		C	611.85																		
		B	611.71																		
	MD	A	611.55							0	0	0	0	0	0						
PIER 17	MD	P	606.21	-2.8%	9.5	809	17	610	67	0	0	0	0	0	0	3.56	0.011	79°16'07''	7.5	1'-1	4-1½" Dia.
	GUIDED EXPANSION	N	---							9.5	13.4	4.8	13.4	65.6	13.4						
		M	---																		
		L	606.37																		
		K	606.44																		
		J	606.67																		
		H	606.91																		
		G	607.15																		
		F	607.39																		
		E	607.62																		
		D	607.86																		
		C	607.96																		
		B	607.81																		
	MD	A	607.66							0	0	0	0	0	0						
PIER 18	MD	P	602.20	-2.8%	10.25	821	28	619	82	0	0	0	0	0	0	0.00	0.009	80°	7.5	1'-1	4-2" Dia.
	FIXED	N	---							9.6	23.9	5.5	33.6	58.8	146.6						
		M	---																		
		L	602.41																		
		K	602.52																		
		J	602.76																		
		H	602.99																		
		G	603.23																		
		F	603.47																		
		E	603.70																		
		D	603.94																		
		C	604.04																		
		B	603.89																		
	MD	A	603.75							0	0	0	0	0	0						
PIER 19		P	598.19	-2.8%	9.25	675	19	508	73							0.00	0.009	80°	7	1'-0½	4-2" Dia.
	MD	N	---							0	0	0	0	0	0						
		M	598.34																		
	FIXED	L	598.44							9.0	18.4	5.5	21.1	56.3	143.9						
		K	598.59																		
		J	598.83																		
		H	599.06																		
		G	599.30																		
		F	599.54																		
		E	599.77																		
		D	600.01																		
		C	600.11																		
		B	599.96																		
	MD	A	599.82							0	0	0	0	0	0						

* ELEVATION AT CENTER OF BEARING FOR USE IN SETTING FINAL BEAM SEAT ELEVATIONS.

** MAXIMUM FACTORED RESULTANT ROTATION. NOT INCLUDING 0.005 RADIANS FOR UNCERTAINTY ALLOWANCE OR 0.005 RADIANS FOR FABRICATION/INSTALLATION TOLERANCE.

NOTES:

FOR DISC BEARING DETAILS, SEE DESIGN SHEET 154.

FOR DISC BEARING NOTES, SEE DESIGN SHEET 156.

FOR BEARING SETTING DATA, SEE DESIGN SHEET 159.

whks
engineers + planners + land surveyors

DESIGN FOR VARIABLE SKEW (L.A.)

2271'-6 x VARI. CONTINUOUS WELDED GIRDER BRIDGE-EBL W/14' BIKE TRAIL

138'-10 & 151'-0⅞ END SPANS MULTIPLE LENGTH INTERIOR SPANS

BEARING DETAILS - UNIT 1

STA. 6792+60.93 - 52' LEFT ℄ I-74 OCTOBER, 2015

SCOTT COUNTY

IOWA DEPARTMENT OF TRANSPORTATION - HIGHWAY DIVISION

DESIGN SHEET NO. 155 OF 282 FILE NO. 30253 DESIGN NO. 3408

BENCH MARK NO. 500: STA. 6781+18.92 LT. 161.19'
ELEV. 575.797, CHISELED "X" IN BOLT E. SIDE
CONCRETE STRUCTURE

BEARING DATA TABLE

LOCATION	BEARING TYPE	GIRDER	* TOP OF BEARING ELEVATION	LONGITUDINAL SLOPE OF SOLE PLATE	BEARING HEIGHT	VERTICAL LOAD				HORIZONTAL LOAD						TOTAL LONGIT. MOVEMENT	** MAX DESIGN ROTATION	BEARING ORIENTATION ANGLE	ANCHOR BOLTS		
						STRENGTH		SERVICE		STRENGTH		SERVICE		EXTREME EVENT					DIM. "A"	DIM. "B"	NUMBER AND SIZE
						MAX.	MIN.	MAX.	MIN.	TRANSV.	LONGIT.	TRANSV.	LONGIT.	TRANSV.	LONGIT.						
				(%)	(IN.)	(KIP)	(KIP)	(KIP)	(KIP)	(KIP)	(KIP)	(KIP)	(KIP)	(KIP)	(KIP)	(IN.)	(RAD.)		(IN.)		(EA. BRG.)
PIER 20	MD	P	594.59	-2.8%	8.875	670	44	507	92	0	0	0	0	0	0	2.72	0.009	78°41'58"	7.5	1'-1	4-1½" Dia.
		N	594.70																		
		M	594.81																		
	GUIDED EXPANSION	L	594.97							8.4	11.4	5.3	11.4	64.0	11.4						
		K	595.14																		
		J	595.37																		
		H	595.61																		
		G	595.85																		
		F	596.08																		
		E	596.32																		
		D	596.56																		
		C	596.66																		
		B	596.51																		
	MD	A	596.37							0	0	0	0	0	0						
PIER 21	MD	P	591.05	-2.4%	8.25	349	15	263	35	0	0	0	0	0	0	4.63	0.016	78°27'10"	5	1'-1½	4-1½" Dia.
		N	591.20																		
		M	591.40																		
	GUIDED EXPANSION	L	591.62							4.9	4.3	3.8	4.3	23.6	4.3						
		K	591.82																		
		J	592.05	-2.5%																	
		H	592.29																		
		G	592.52																		
		F	592.75																		
		E	592.98																		
		D	593.21																		
		C	593.30																		
		B	593.16																		
	MD	A	592.98							0	0	0	0	0	0						

* ELEVATION AT CENTER OF BEARING FOR USE IN SETTING FINAL BEAM SEAT ELEVATIONS.

** MAXIMUM FACTORED RESULTANT ROTATION. NOT INCLUDING 0.005 RADIANS FOR UNCERTAINTY ALLOWANCE OR 0.005 RADIANS FOR FABRICATION/INSTALLATION TOLERANCE.

DISC BEARING NOTES:

THE SOLE PLATES SHALL BE TAPERED TO THE LONGITUDINAL SLOPE SHOWN, AND SHALL BE SIZED FOR THE MOVEMENTS SHOWN IN THE BEARING DATA TABLE.

BEARINGS SHALL BE DESIGNED TO ACCOMMODATE A SERVICE ROTATION OF 0.02 RADIANS IN EACH DIRECTION.

ALL BEARINGS SHALL BE DESIGNED TO BE FULLY REMOVEABLE. A THREE-PLATE CONFIGURATION (AS ILLUSTRATED IN THESE PLANS) MAY BE USED IF THE BEARING CAN BE REMOVED UNDER A MAXIMUM JACKING HEIGHT OF ½". A FOUR-PLATE CONFIGURATION, UTILIZING A LOWER BEARING PLATE EITHER WELDED OR BOLTED TO THE MASONRY PLATE, SHALL BE CONSIDERED TO BE AN ACCEPTABLE ALTERNATIVE TO THE DETAIL SHOWN.

SEE "JACKING NOTES" ELSEWHERE IN THESE PLANS FOR ADDITIONAL FUTURE JACKING PROVISIONS.

FOR GUIDED EXPANSION BEARINGS, STAINLESS STEEL SURFACES SHALL EXTEND A MINIMUM OF 1 INCH EACH WAY BEYOND THE SPECIFIED MOVEMENT RANGE.

TOTAL MOVEMENT SHOWN IN THE BEARING DATA TABLE REPRESENT THE COMBINED MOVEMENT RANGE FOR BRIDGE EXPANSION (50° F TO 125° F) AND BRIDGE CONTRACTION (50° F TO -25° F).

ALL BEARINGS SHALL BE MARKED PRIOR TO SHIPPING. THE MARKS SHALL INCLUDE THE BEARING LOCATION ON THE BRIDGE, AND A DIRECTION ARROW THAT POINTS UPSTATION. ALL MARKS SHALL BE PERMANENT AND BE VISIBLE AFTER THE BEARING IS INSTALLED. THE MARKS SHALL BE ON THE TOP PLATE OF THE BEARING.

THE GAP BETWEEN THE GUIDE BARS AND THE BEARINGS SHALL BE ¼ INCH.

NON-STAINLESS STEEL COMPONENTS OF BEARING ASSEMBLIES SHALL BE OF ASTM A709 GRADE 50W STEEL.

THE BEARING HEIGHT NOTED IN THE DISC BEARING DATA TABLE REPRESENTS THE ASSUMED TOTAL HEIGHT OF THE BEARING ASSEMBLY PLUS THE ⅛ INCH PREFORMED MASONRY PAD. THIS HEIGHT WAS USED BY THE DESIGNER TO ESTABLISH THE PEDESTAL (OR STEP) ELEVATIONS AS NOTED ON PIER AND ABUTMENT DETAIL SHEETS. THE MINIMUM PEDESTAL HEIGHT, DEPTH OF CAP, AND/OR COLUMN HEIGHT, AS SHOWN ON THE PIER DRAWINGS, SHALL NOT BE CHANGED WITHOUT WRITTEN APPROVAL OF THE ENGINEER. THE ACTUAL BEARING HEIGHT DETERMINED BY THE BEARING MANUFACTURER SHALL BE USED TO SET THE TOP OF PEDESTAL (OR STEP) AND PIER CAP ELEVATIONS TO ACHIEVE THE PROPER TOP OF BEARING ELEVATIONS GIVEN IN THE BEARING DATA TABLE. THE LOW PEDESTAL (OR STEP) ELEVATION MAY NOT BE LOWERED. THE TOP OF PEDESTAL (OR STEP) AND PIER CAP ELEVATIONS SHALL BE SHOWN ON THE SHOP DRAWINGS.

IN ORDER TO COORDINATE TOP OF PEDESTAL (OR STEP) ELEVATIONS AND ANCHOR BOLT LOCATIONS, THE PIERS AND ABUTMENT SHALL NOT BE POURED PRIOR TO RECEIVING APPROVED BEARING SHOP DRAWINGS FOR THIS CONTRACT.

ANCHOR BOLTS, NUTS, AND WASHERS SHALL MEET THE REQUIREMENTS OF I.M. 453.08. THE ANCHOR BOLT LAYOUTS SHOWN ON DESIGN SHEETS 56 AND 57 WERE USED IN SETTING THE GEOMETRY OF THE PIER AND ABUTMENT REINFORCING TO ALLOW THE ANCHOR BOLTS TO BE INSTALLED WITHOUT CONFLICT WITH THE REINFORCING. WHEN PLACING ANCHOR BOLTS, CAP REINFORCEMENT SHALL BE AVOIDED. ANY CHANGES TO THE ANCHOR BOLT PATTERN MAY REQUIRE A PLAN CHANGE TO THE REINFORCING LAYOUT.

ANCHOR BOLTS SHALL BE EMBEDDED INTO THE PIER CAP A MINIMUM OF 1'-3 FOR 1½"Φ AND 2'-0 FOR 2"Φ. FABRICATOR SHALL DETERMINE REQUIRED ANCHOR BOLT LENGTH BASED ON BEARING DETAILS AND REQUIRED ANCHOR BOLT EMBEDMENT. SHOP DRAWINGS SHALL SHOW ANCHOR BOLT EMBEDMENT, PROJECTION, THREAD LENGTH, AND TOTAL BOLT LENGTH.

FIELD WELDING SHALL MEET THE REQUIREMENTS OF MATERIALS I.M. 558. MAGNETIC PARTICLE INSPECTION OF WELDS, IN ACCORDANCE WITH THE STANDARD SPECIFICATIONS, WILL BE REQUIRED FOR ALL FIELD WELDS.

THE BEARINGS SHALL BE DESIGNED FOR THE SERVICE, STRENGTH AND EXTREME EVENT LOADS OCCURRING SIMULTANEOUSLY WITH THE ROTATIONS AND MOVEMENTS SHOWN IN THE BEARING DATA TABLE. SEE SECTION 2434 OF THE STANDARD SPECIFICATIONS FOR ADDITIONAL REQUIREMENTS.

NOTES:

FOR DISC BEARING DETAILS, SEE DESIGN SHEET 154.

FOR BEARING SETTING DATA, SEE DESIGN SHEET 159.

whks
engineers + planners + land surveyors

DESIGN FOR VARIABLE SKEW (L.A.)

2271'-6 x VARI. CONTINUOUS WELDED GIRDER BRIDGE-EBL W/14' BIKE TRAIL

138'-10 & 151'-0⅞ END SPANS MULTIPLE LENGTH INTERIOR SPANS

BEARING DETAILS - UNIT 1

STA. 6792+60.93 - 52' LEFT ℄ I-74 OCTOBER, 2015

SCOTT COUNTY

IOWA DEPARTMENT OF TRANSPORTATION - HIGHWAY DIVISION

DESIGN SHEET NO. 156 OF 282 FILE NO. 30253 DESIGN NO. 3408

BENCH MARK NO. 500: STA. 6781+18.92 LT. 161.19'
ELEV. 575.797, CHISELED "X" IN BOLT E. SIDE
CONCRETE STRUCTURE

BEARING DATA TABLE

LOCATION	BEARING TYPE	GIRDER	* TOP OF BEARING ELEVATION	LONGITUDINAL SLOPE OF SOLE PLATE	BEARING HEIGHT	VERTICAL LOAD STRENGTH MAX.	VERTICAL LOAD STRENGTH MIN.	VERTICAL LOAD SERVICE MAX.	VERTICAL LOAD SERVICE MIN.	HORIZONTAL LOAD STRENGTH TRANSV.	HORIZONTAL LOAD STRENGTH LONGIT.	HORIZONTAL LOAD SERVICE TRANSV.	HORIZONTAL LOAD SERVICE LONGIT.	HORIZONTAL LOAD EXTREME EVENT TRANSV.	HORIZONTAL LOAD EXTREME EVENT LONGIT.	TOTAL LONGIT. MOVEMENT	** MAX DESIGN ROTATION	BEARING ORIENTATION ANGLE	ANCHOR BOLTS DIM. "A"	ANCHOR BOLTS DIM. "B"	ANCHOR BOLTS NUMBER AND SIZE
				(%)	(IN.)	(KIP)	(KIP)	(KIP)	(KIP)	(KIP)	(KIP)	(KIP)	(KIP)	(KIP)	(KIP)	(IN.)	(RAD.)		(IN.)		(EA. BRG.)
PIER 21	GUIDED EXPANSION	G	592.41	-2.42%	8	298	30	226	57	6.6	4.9	3.3	4.9	20.5	4.9	3.20	0.021	80°00'00"	5	1'-1½	4-1½" Dia.
		F	592.67	-2.43%																	
		E	592.91	-2.44%																	
		D	593.14	-2.46%																	
		C	593.23	-2.47%																	
		B	593.08	-2.48%																	
		A	592.90	-2.49%																	
PIER 22	FIXED	G	589.71	-1.54%	9.25	645	136	492	201	13.3	29.2	6.6	46.3	60.1	80.6	0.00	0.012	80°00'00"	7	1'- 0½	4-2" Dia.
		F	589.93	-1.55%																	
		E	590.15	-1.56%																	
		D	590.37	-1.57%																	
		C	590.44	-1.59%																	
		B	590.28	-1.60%																	
		A	590.11	-1.61%																	
PIER 23	FIXED	G	588.26	-0.61%	8.75	560	94	425	153	13.4	63.0	6.7	113.8	47.8	128.3	0.00	0.010	80°00'00"	7	1'- 0½	4-2" Dia.
		F	588.46	-0.62%																	
		E	588.66	-0.63%																	
		D	588.86	-0.64%																	
		C	588.92	-0.66%																	
		B	588.74	-0.67%																	
		A	588.56	-0.68%																	
PIER 24	GUIDED EXPANSION	G	588.04	0.32%	8.875	642	136	489	201	13.3	13.0	6.6	13.0	60.1	13.0	3.20	0.011	80°00'00"	7.5	1'-1	4-1½" Dia.
		F	588.23	0.31%																	
		E	588.42	0.30%																	
		D	588.60	0.29%																	
		C	588.65	0.27%																	
		B	588.45	0.26%																	
		A	588.25	0.25%																	
PIER 25	GUIDED EXPANSION	G	588.77	0.584%	8	298	30	226	56	6.6	4.9	3.3	4.9	20.5	4.9	5.33	0.021	80°00'00"	5	1'-1½	4-1½" Dia.
		F	588.99																		
		E	589.17																		
		D	589.35																		
		C	589.39																		
		B	589.19																		
		A	588.96																		

* ELEVATION AT CENTER OF BEARING FOR USE IN SETTING FINAL BEAM SEAT ELEVATIONS.

** MAXIMUM FACTORED RESULTANT ROTATION. NOT INCLUDING 0.005 RADIANS FOR UNCERTAINTY ALLOWANCE OR 0.005 RADIANS FOR FABRICATION/INSTALLATION TOLERANCE.

NOTES:

FOR DISC BEARING DETAILS, SEE DESIGN SHEET 154.

FOR DISC BEARING NOTES, SEE DESIGN SHEET 156.

FOR BEARING SETTING DATA, SEE DESIGN SHEET 159.

whks
engineers + planners + land surveyors

DESIGN FOR VARIABLE SKEW (L.A.)

227'-6 x VARI. CONTINUOUS WELDED GIRDER BRIDGE-EBL W/14' BIKE TRAIL

138'-10 & 151'-0⅞ END SPANS MULTIPLE LENGTH INTERIOR SPANS

BEARING DETAILS - UNIT 2

STA. 6792+60.93 - 52' LEFT ℄ I-74 OCTOBER, 2015

SCOTT COUNTY

IOWA DEPARTMENT OF TRANSPORTATION - HIGHWAY DIVISION

DESIGN SHEET NO. 157 OF 282 FILE NO. 30253 DESIGN NO. 3408

BENCH MARK NO. 500: STA. 6781+18.92 LT. 161.19'
ELEV. 575.797, CHISELED "X" IN BOLT E. SIDE
CONCRETE STRUCTURE

BEARING DATA TABLE

LOCATION	BEARING TYPE	GIRDER	* TOP OF BEARING ELEVATION	LONGITUDINAL SLOPE OF SOLE PLATE	BEARING HEIGHT	VERTICAL LOAD				HORIZONTAL LOAD						TOTAL LONGIT. MOVEMENT	** MAX DESIGN ROTATION	BEARING ORIENTATION ANGLE	ANCHOR BOLTS		
						STRENGTH		SERVICE		STRENGTH		SERVICE		EXTREME EVENT					DIM. "A"	DIM. "B"	NUMBER AND SIZE
						MAX.	MIN.	MAX.	MIN.	TRANSV.	LONGIT.	TRANSV.	LONGIT.	TRANSV.	LONGIT.						
				(%)	(IN.)	(KIP)	(KIP)	(KIP)	(KIP)	(KIP)	(KIP)	(KIP)	(KIP)	(KIP)	(KIP)	(IN.)	(RAD.)		(IN.)		(EA. BRG.)
PIER 25	GUIDED EXPANSION	G	588.55	0.584%	8	290	26	220	52	6.8	4.5	3.4	4.5	19.2	4.5	3.47	0.018	80°00'00"	5	1'-1½	4-1½" Dia.
		F	588.75																		
		E	588.93																		
		D	589.11																		
		C	589.15																		
		B	588.95																		
		A	588.73																		
PIER 26	FIXED	G	589.32	0.584%	9.875	762	140	582	211	15.4	49.3	7.7	88.2	67.7	86.9	0.00	0.012	80°00'00"	7.5	1'-1	4-2" Dia.
		F	589.51																		
		E	589.69																		
		D	589.87																		
		C	589.91																		
		B	589.71																		
		A	589.50																		
PIER 27	FIXED	G	590.32	0.584%	9.875	762	153	582	228	16.0	63.5	8.0	116.7	70.5	91.8	0.00	0.012	80°00'00"	7.5	1'-1	4-2" Dia.
		F	590.51																		
		E	590.69																		
		D	590.87																		
		C	590.91																		
		B	590.71																		
		A	590.50																		
PIER 28	GUIDED EXPANSION	G	591.20	0.584%	8.25	313	30	237	59	7.4	5.0	3.7	5.0	21.2	5.0	3.65	0.021	80°00'00"	5	1'-1½	4-1½" Dia.
		F	591.41																		
		E	591.59																		
		D	591.77																		
		C	591.81																		
		B	591.61																		
		A	591.38																		

* ELEVATION AT CENTER OF BEARING FOR USE IN SETTING FINAL BEAM SEAT ELEVATIONS.

** MAXIMUM FACTORED RESULTANT ROTATION. NOT INCLUDING 0.005 RADIANS FOR UNCERTAINTY ALLOWANCE OR 0.005 RADIANS FOR FABRICATION/INSTALLATION TOLERANCE.

NOTES:

FOR DISC BEARING DETAILS, SEE DESIGN SHEET 154.

FOR DISC BEARING NOTES, SEE DESIGN SHEET 156.

FOR BEARING SETTING DATA, SEE DESIGN SHEET 159.

whks
engineers + planners + land surveyors

DESIGN FOR VARIABLE SKEW (L.A.)

2271'-6 x VARI. CONTINUOUS WELDED GIRDER BRIDGE-EBL W/14' BIKE TRAIL

138'-10 & 151'-0⅞ END SPANS MULTIPLE LENGTH INTERIOR SPANS

BEARING DETAILS - UNIT 3

STA. 6792+60.93 - 52' LEFT ℄ I-74 OCTOBER, 2015

SCOTT COUNTY

IOWA DEPARTMENT OF TRANSPORTATION - HIGHWAY DIVISION

DESIGN SHEET NO. 158 OF 282 FILE NO. 30253 DESIGN NO. 3408

BENCH MARK NO. 500: STA. 6781+18.92 LT. 161.19'
ELEV. 575.797, CHISELED "X" IN BOLT E. SIDE
CONCRETE STRUCTURE

BEARING DATA TABLE

LOCATION	BEARING TYPE	GIRDER	* TOP OF BEARING ELEVATION	LONGITUDINAL SLOPE OF SOLE PLATE	BEARING HEIGHT	VERTICAL LOAD STRENGTH MAX.	VERTICAL LOAD STRENGTH MIN.	VERTICAL LOAD SERVICE MAX.	VERTICAL LOAD SERVICE MIN.	HORIZONTAL LOAD STRENGTH TRANSV.	HORIZONTAL LOAD STRENGTH LONGIT.	HORIZONTAL LOAD SERVICE TRANSV.	HORIZONTAL LOAD SERVICE LONGIT.	HORIZONTAL LOAD EXTREME EVENT TRANSV.	HORIZONTAL LOAD EXTREME EVENT LONGIT.	TOTAL LONGIT. MOVEMENT	** MAX DESIGN ROTATION	BEARING ORIENTATION ANGLE	ANCHOR BOLTS DIM. "A"	ANCHOR BOLTS DIM. "B"	ANCHOR BOLTS NUMBER AND SIZE
				(%)	(IN.)	(KIP)	(KIP)	(KIP)	(KIP)	(KIP)	(KIP)	(KIP)	(KIP)	(KIP)	(KIP)	(IN.)	(RAD.)		(IN.)		(EA. BRG.)
PIER 28	GUIDED EXPANSION	G	591.45	0.584%	8	297	39	225	69	7.2	4.9	3.6	4.9	22.6	4.9	3.46	0.019	79°59'11"	5	1'-1½	4-1½" Dia.
		F	591.64																		
		E	591.82																		
		D	592.00																		
		C	592.04																		
		B	591.84																		
		A	591.63																		
PIER 29	FIXED	G	592.32	0.584%	9.875	710	151	542	221	14.4	85.3	7.2	157.5	66.8	89.4	0.00	0.010	80°00'00"	7.5	1'-1	4-2" Dia.
		F	592.51																		
		E	592.69																		
		D	592.87																		
		C	592.91																		
		B	592.71																		
		A	592.50																		
PIER 30	FIXED	G	593.24	0.80%	8.75	600	97	455	171	14.4	85.3	7.2	157.5	52.2	142.1	0.00	0.009	79°46'34"	7	1'- 0½	4-2" Dia.
		F	593.41	0.78%																	
		E	593.59	0.77%																	
		D	593.76	0.75%																	
		C	593.80	0.74%																	
		B	593.59	0.72%																	
		A	593.39	0.71%																	
PIER 31	GUIDED EXPANSION	G	595.20	1.87%	8.875	690	152	526	225	14.6	14.1	7.3	14.1	66.3	14.1	3.46	0.011	79°38'06"	7.5	1'-1	4-1½" Dia.
		F	595.36	1.86%																	
		E	595.51	1.84%																	
		D	595.67	1.83%																	
		C	595.68	1.81%																	
		B	595.45	1.80%																	
		A	595.21	1.78%																	
ABUT 32	GUIDED EXPANSION	G	598.83	2.76%	8	311	41	236	73	7.4	5.1	3.7	5.1	23.6	5.1	5.80	0.021	79°19'17"	5	1'-1½	4-1½" Dia.
		F	598.98																		
		E	599.11																		
		D	599.24																		
		C	599.23																		
		B	598.98																		
		A	598.71																		

* ELEVATION AT CENTER OF BEARING FOR USE IN SETTING FINAL BEAM SEAT ELEVATIONS.

** MAXIMUM FACTORED RESULTANT ROTATION. NOT INCLUDING 0.005 RADIANS FOR UNCERTAINTY ALLOWANCE OR 0.005 RADIANS FOR FABRICATION/INSTALLATION TOLERANCE.

BEARING SETTING DATA

TEMP. (F.)	OFFSET (IN.) UNIT 1 PIER 16	PIER 17	PIER 18	PIER 19	PIER 20	PIER 21	UNIT 2 PIER 21	PIER 22	PIER 23	PIER 24	PIER 25	UNIT 3 PIER 25	PIER 26	PIER 27	PIER 28	UNIT 4 PIER 28	PIER 29	PIER 30	PIER 31	ABUT. 32
90°	-1 1/8	-11/16	0	0	9/16	15/16	-5/8	0	0	5/8	1 1/16	-11/16	0	0	3/4	-11/16	0	0	11/16	1 3/16
50°	0	0	0	0	0	0	0	0	0	0	0	0	0	0	0	0	0	0	0	0
10°	1 1/8	11/16	0	0	-9/16	-15/16	5/8	0	0	-5/8	-1 1/16	11/16	0	0	-3/4	11/16	0	0	-11/16	-1 3/16

BEARING SETTINGS FOR OTHER TEMPERATURES ARE PROPORTIONAL.

POSITIVE SIGN - MOVE TOP OF BEARING ASSEMBLY UPSTATION.
ZERO - THE SOLE PLATE SHALL BE CENTERED OVER THE LOWER BEARING ASSEMBLY.
NEGATIVE SIGN - MOVE TOP OF BEARING ASSEMBLY DOWNSTATION.

TEMPERATURES SHOWN ARE CONCRETE PIER TEMPERATURES ON THE UNDERSIDE OR SHADED PORTION OF THE PIER CAP.

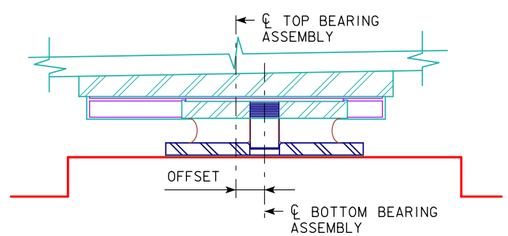

BEARING SETTING DETAIL

NOTES:

FOR DISC BEARING DETAILS, SEE DESIGN SHEET 154.

FOR DISC BEARING NOTES, SEE DESIGN SHEET 156.

whks
engineers + planners + land surveyors

DESIGN FOR VARIABLE SKEW (L.A.)

227'-6 x VARI. CONTINUOUS WELDED GIRDER BRIDGE-EBL W/14' BIKE TRAIL

138'-10 & 151'-0⅞ END SPANS MULTIPLE LENGTH INTERIOR SPANS

BEARING DETAILS - UNIT 4

STA. 6792+60.93 - 52' LEFT ℄ I-74 OCTOBER, 2015

SCOTT COUNTY

IOWA DEPARTMENT OF TRANSPORTATION - HIGHWAY DIVISION

DESIGN SHEET NO. 159 OF 282 FILE NO. 30253 DESIGN NO. 3408

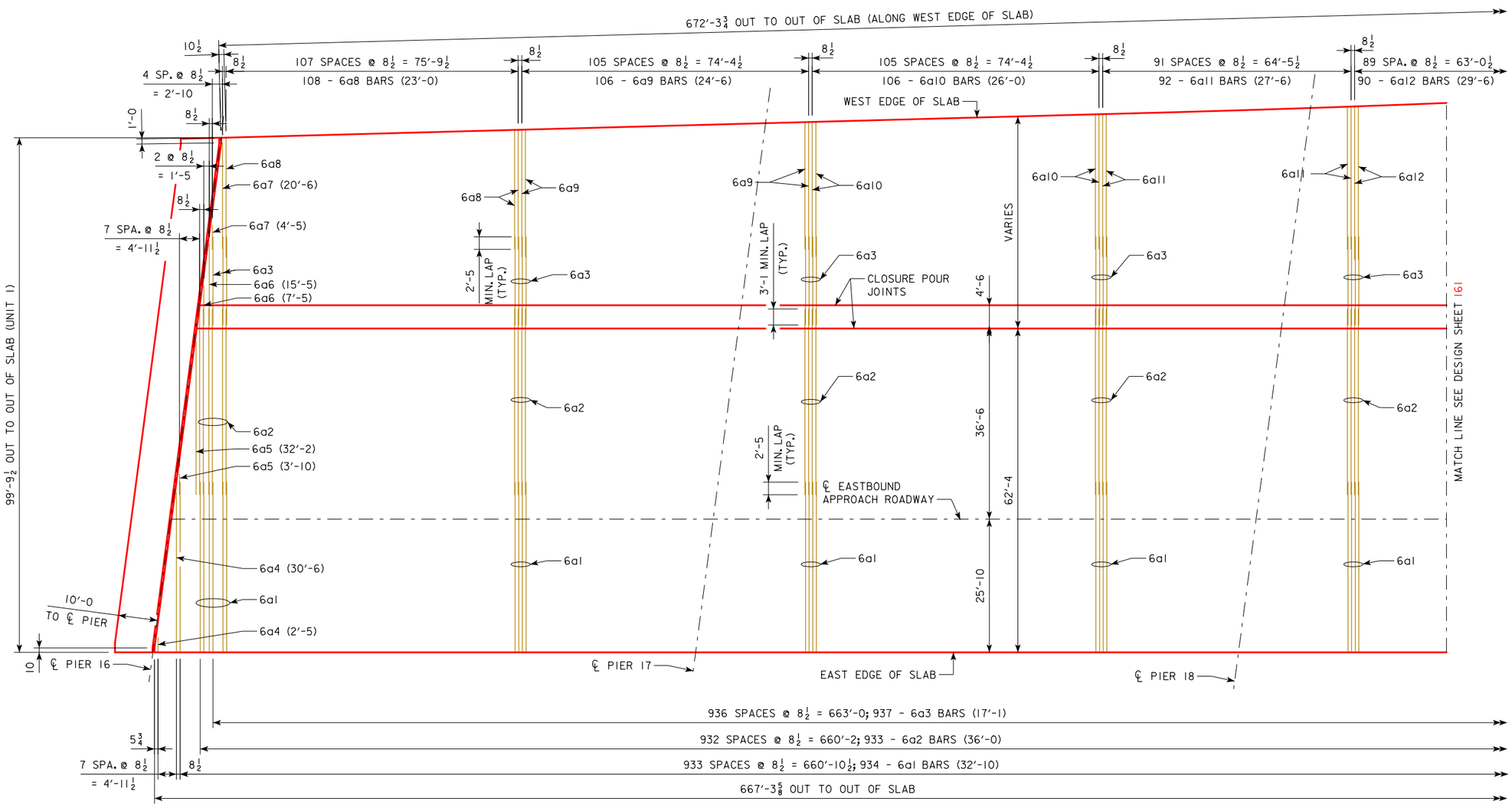

SLAB PLAN REINFORCING LAYOUT - BOTTOM TRANSVERSE

NOTE:
DIMENSIONS ALONG ℄ EASTBOUND APPROACH ROADWAY

N

whks
engineers + planners + land surveyors

DESIGN FOR VARIABLE SKEW (L.A.)

2271'-6 x VARI. CONTINUOUS WELDED GIRDER BRIDGE-EBL W/14' BIKE TRAIL

138'-10 & 151'-0 7/8 END SPANS MULTIPLE LENGTH INTERIOR SPANS

TRANSVERSE REINFORCING-UNIT 1

STA. 6792+60.93 - 52' LEFT ℄ I-74 OCTOBER, 2015

SCOTT COUNTY

IOWA DEPARTMENT OF TRANSPORTATION - HIGHWAY DIVISION

DESIGN SHEET NO. 160 OF 282 FILE NO. 30253 DESIGN NO. 3408

DESIGN TEAM MG / BB / CF	SCOTT COUNTY	PROJECT NUMBER BRFIM-074-1(200)5--05-82	SHEET NUMBER 161

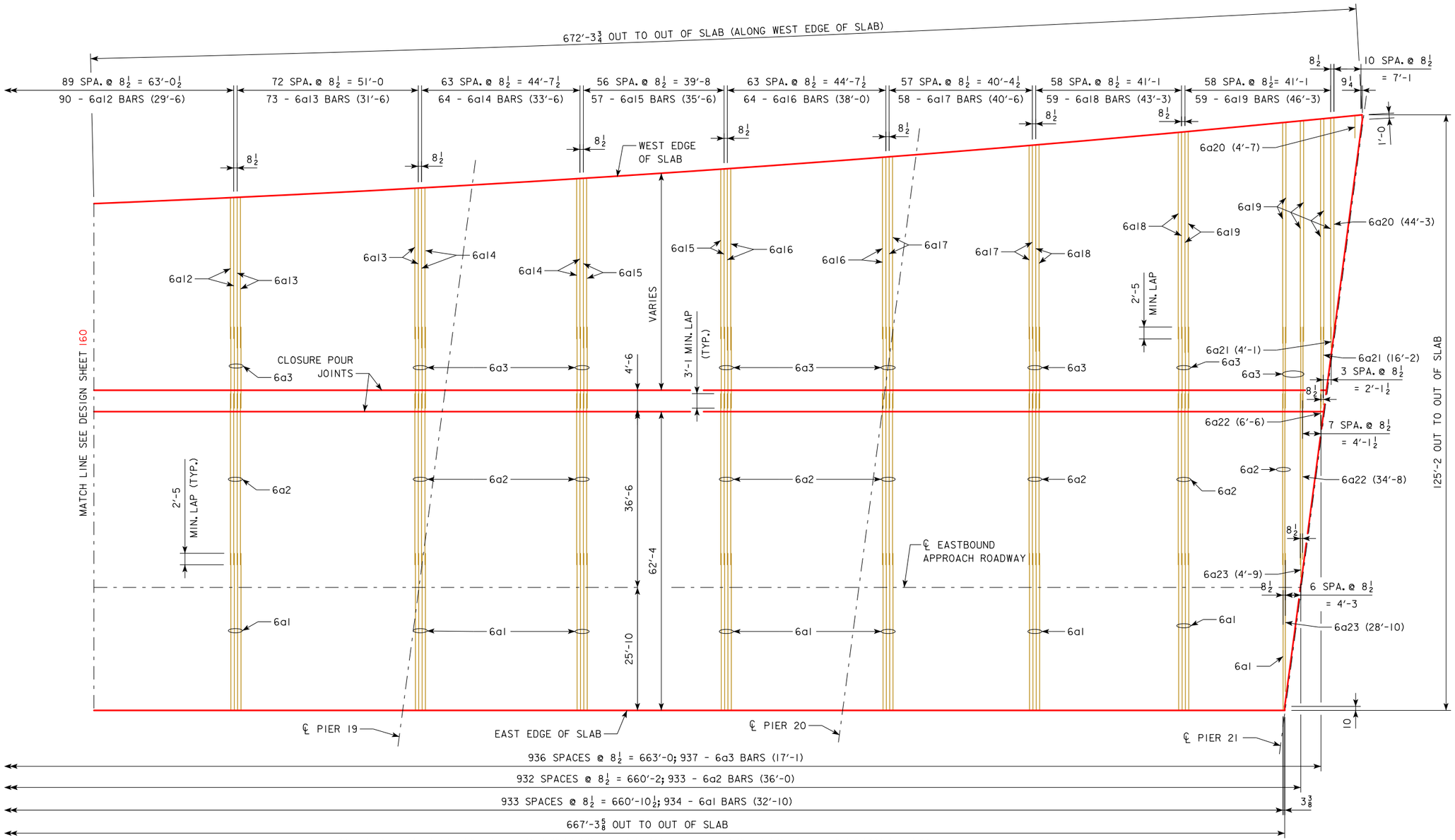

SLAB PLAN REINFORCING LAYOUT - BOTTOM TRANSVERSE

NOTE:
DIMENSIONS ALONG ℄ EASTBOUND APPROACH ROADWAY

N

whks
engineers + planners + land surveyors

DESIGN FOR VARIABLE SKEW (L.A.)

2271'-6 x VARI. CONTINUOUS WELDED GIRDER BRIDGE-EBL W/14' BIKE TRAIL

138'-10 & 151'-0⅞ END SPANS MULTIPLE LENGTH INTERIOR SPANS

TRANSVERSE REINFORCING-UNIT 1

STA. 6792+60.93 - 52' LEFT ℄ I-74 OCTOBER, 2015

SCOTT COUNTY

IOWA DEPARTMENT OF TRANSPORTATION - HIGHWAY DIVISION

DESIGN SHEET NO. 161 OF 282 FILE NO. 30253 DESIGN NO. 3408

DESIGN TEAM MG / BB / CF	SCOTT COUNTY	PROJECT NUMBER BRFIM-074-1(200)5--05-82	SHEET NUMBER 162

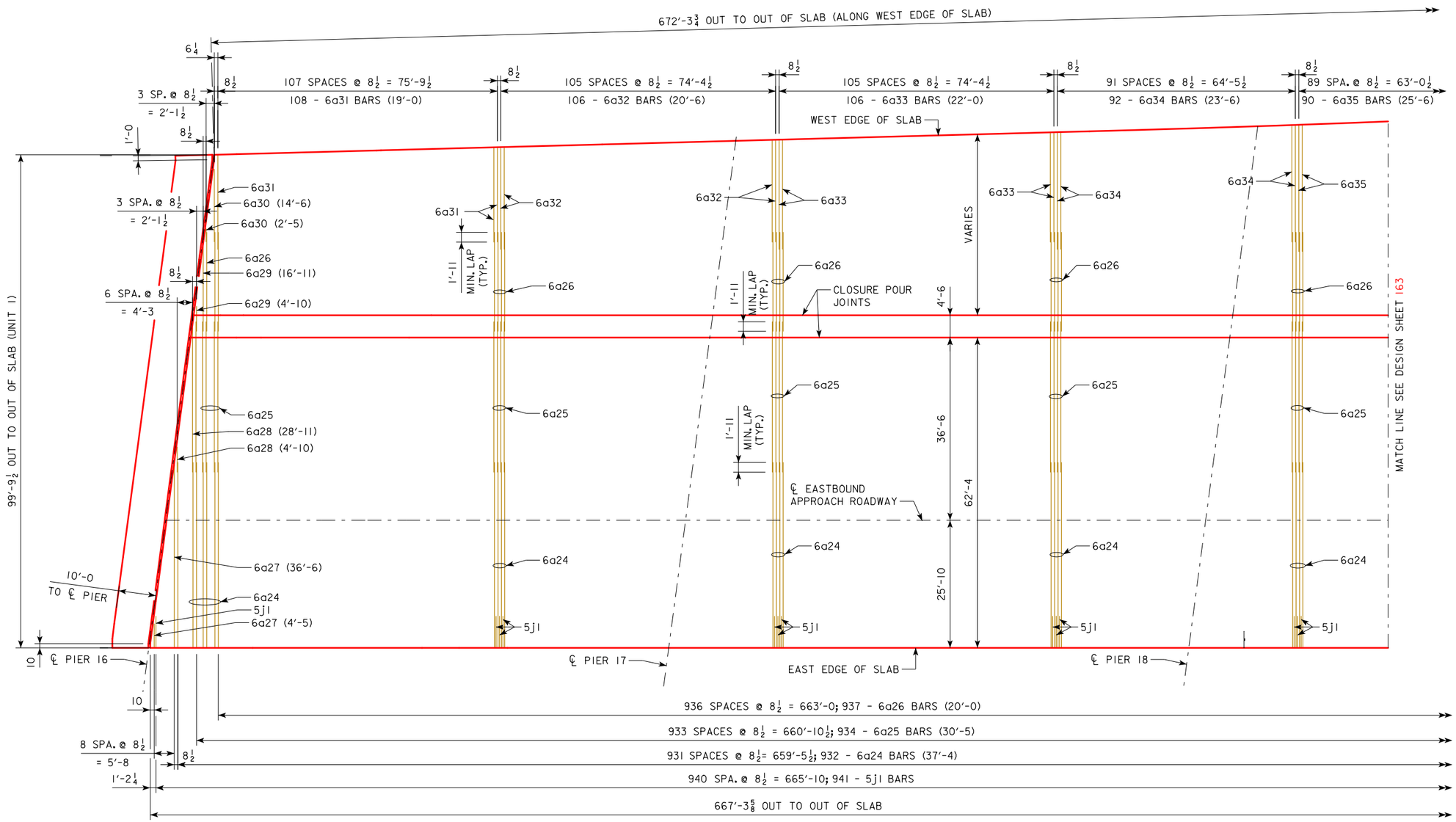

SLAB PLAN REINFORCING LAYOUT - TOP TRANSVERSE

NOTE:
DIMENSIONS ALONG ℄ EASTBOUND
APPROACH ROADWAY

N

whks
engineers + planners + land surveyors

DESIGN FOR VARIABLE SKEW (L.A.)

2271'-6 x VARI. CONTINUOUS WELDED GIRDER BRIDGE-EBL W/14' BIKE TRAIL

138'-10 & 151'-0 7/8 END SPANS MULTIPLE LENGTH INTERIOR SPANS

TRANSVERSE REINFORCING-UNIT 1

STA. 6792+60.93 - 52' LEFT ℄ I-74 OCTOBER, 2015

SCOTT COUNTY

IOWA DEPARTMENT OF TRANSPORTATION - HIGHWAY DIVISION

DESIGN SHEET NO. 162 OF 282 FILE NO. 30253 DESIGN NO. 3408

DESIGN TEAM MG / BB / CF	SCOTT COUNTY	PROJECT NUMBER BRFIM-074-1(200)5--05-82	SHEET NUMBER 163

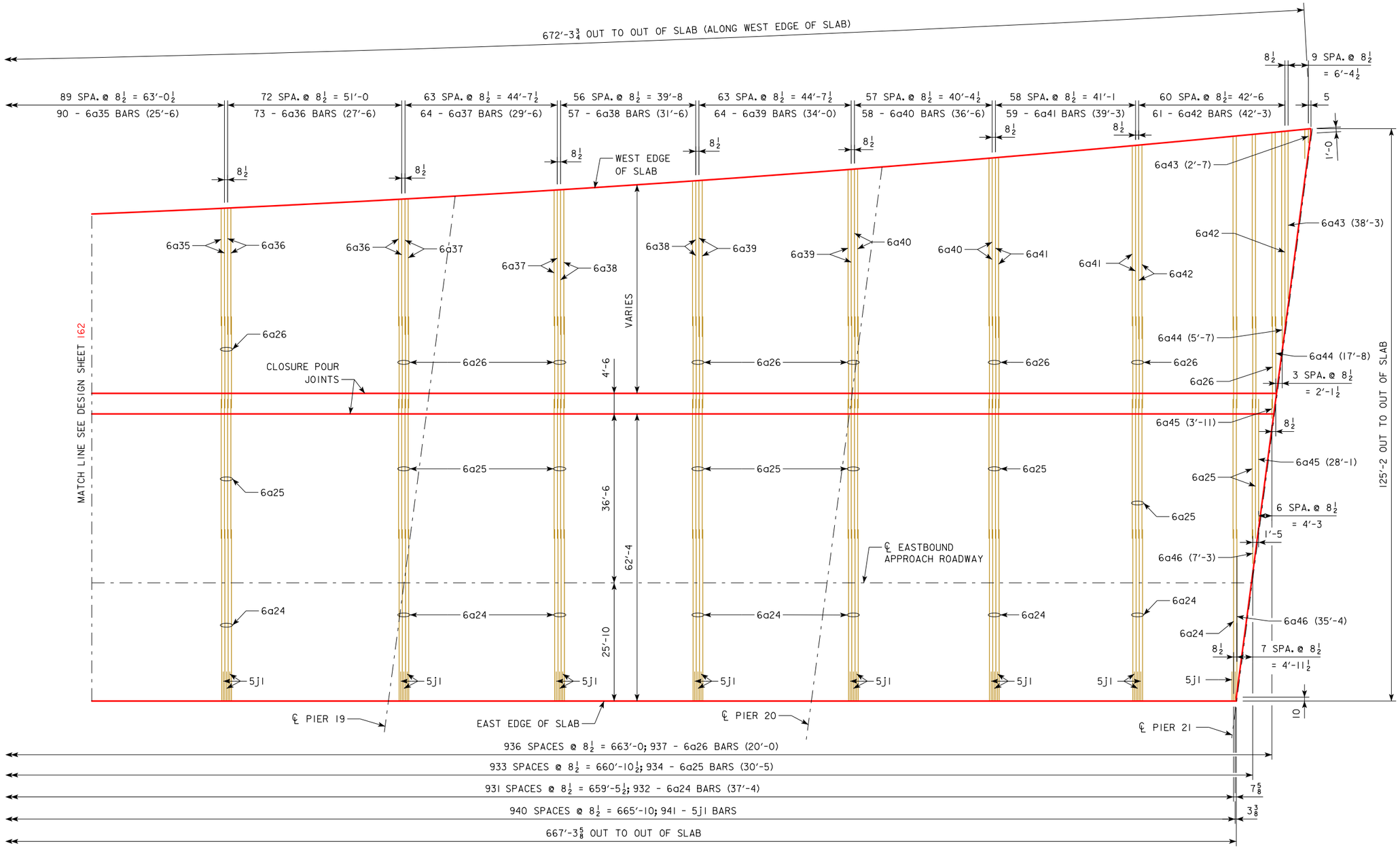

SLAB PLAN REINFORCING LAYOUT - TOP TRANSVERSE

NOTE:
DIMENSIONS ALONG ℄ EASTBOUND APPROACH ROADWAY

N

whks
engineers + planners + land surveyors

DESIGN FOR VARIABLE SKEW (L.A.)

2271'-6 x VARI. CONTINUOUS WELDED GIRDER BRIDGE-EBL W/14' BIKE TRAIL

138'-10 & 151'-0⅞ END SPANS MULTIPLE LENGTH INTERIOR SPANS

TRANSVERSE REINFORCING-UNIT 1

STA. 6792+60.93 - 52' LEFT ℄ I-74 OCTOBER, 2015

SCOTT COUNTY

IOWA DEPARTMENT OF TRANSPORTATION - HIGHWAY DIVISION

DESIGN SHEET NO. 163 OF 282 FILE NO. 30253 DESIGN NO. 3408

DESIGN TEAM MG / BB / CF	SCOTT COUNTY	PROJECT NUMBER BRFIM-074-1(200)5--05-82	SHEET NUMBER 164

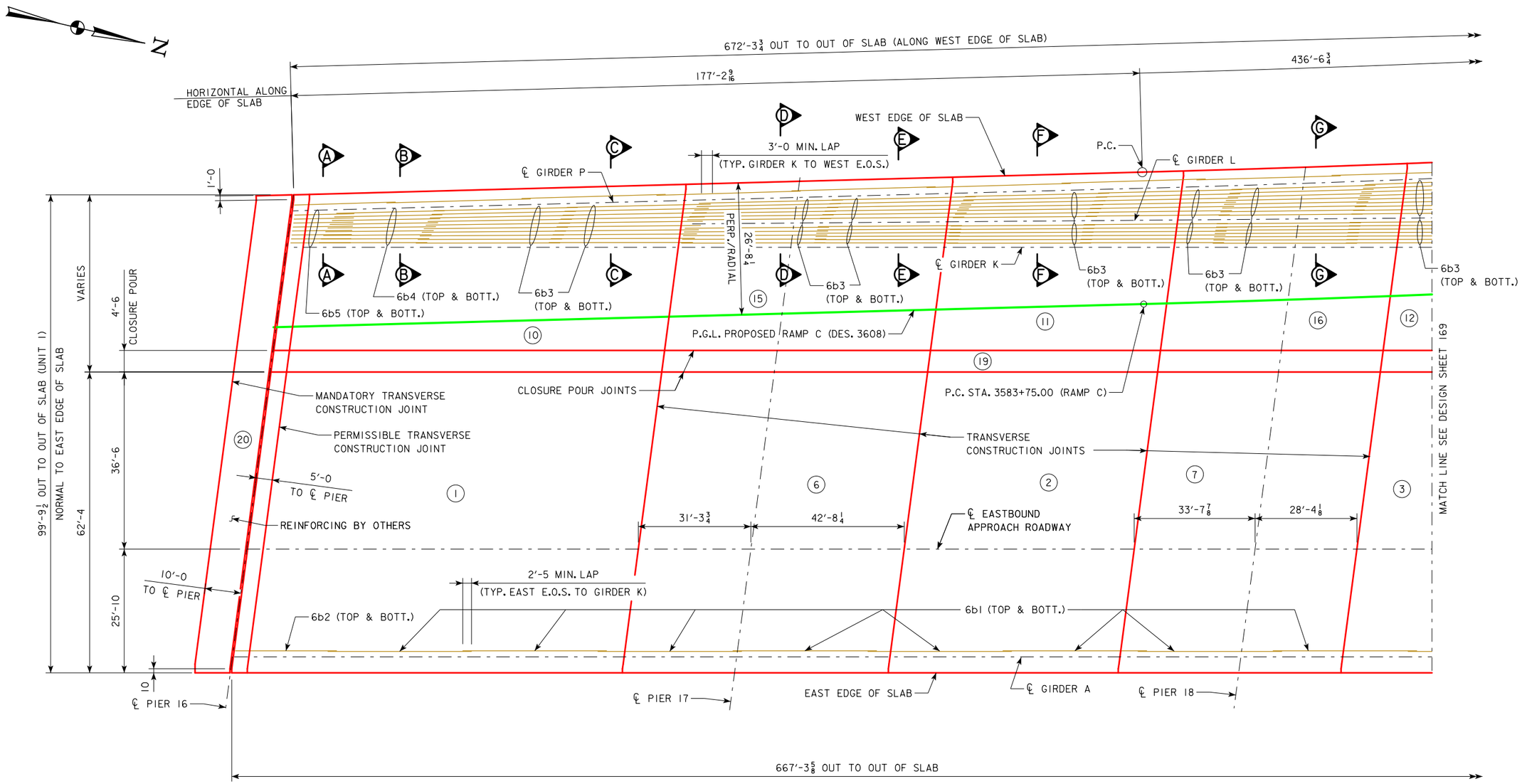

SLAB LONGITUDINAL REINFORCING LAYOUT AND CONCRETE PLACEMENT DIAGRAM

NOTES:
ROADWAY SLAB SHALL BE PLACED IN SECTIONS AND SEQUENCES INDICATED. ALTERNATE PROCEDURES FOR PLACING SLAB CONCRETE MAY BE SUBMITTED FOR APPROVAL TOGETHER WITH A STATEMENT OF THE PROPOSED METHOD AND EVIDENCE THAT THE CONTRACTOR POSSESSES THE NECESSARY EQUIPMENT AND FACILITIES TO ACCOMPLISH THE REQUIRED RESULTS.

THE LONGITUDINAL STEEL SECTION CHANGES AT EACH LAP SPLICE AND ENDS OF PARTIAL LENGTH GIRDERS BETWEEN GIRDER K AND P.

FOR ACTUAL TOP AND BOTTOM REINFORCING BAR LAYOUT FOR SPACES BETWEEN GIRDERS K TO P AND WEST OVERHANG SEE THE CROSS SECTION DETAILS ON DESIGN SHEETS 166 & 167.

THE TRANSVERSE CONSTRUCTION JOINTS SHOWN ARE PERPENDICULAR TO THE ℄ EASTBOUND APPROACH ROADWAY AT THE EDGE OF SLAB BELOW THE EAST RAIL AND THE WEST CURB.

WEST EDGE OF SLAB IS PARALLEL TO P.G.L. PROPOSED RAMP C (DES. 3608)

whks
engineers + planners + land surveyors

DESIGN FOR VARIABLE SKEW (L.A.)
2271'-6 x VARI. CONTINUOUS WELDED GIRDER BRIDGE-EBL W/14' BIKE TRAIL
138'-10 & 151'-0 7/8 END SPANS MULTIPLE LENGTH INTERIOR SPANS
LONGITUDINAL REINFORCING-UNIT 1
STA. 6792+60.93 - 52' LEFT ℄ I-74 OCTOBER, 2015
SCOTT COUNTY
IOWA DEPARTMENT OF TRANSPORTATION - HIGHWAY DIVISION
DESIGN SHEET NO. 164 OF 282 FILE NO. 30253 DESIGN NO. 3408

DESIGN TEAM MG / BB / CF	SCOTT COUNTY	PROJECT NUMBER BRFIM-074-1(200)5--05-82	SHEET NUMBER 165

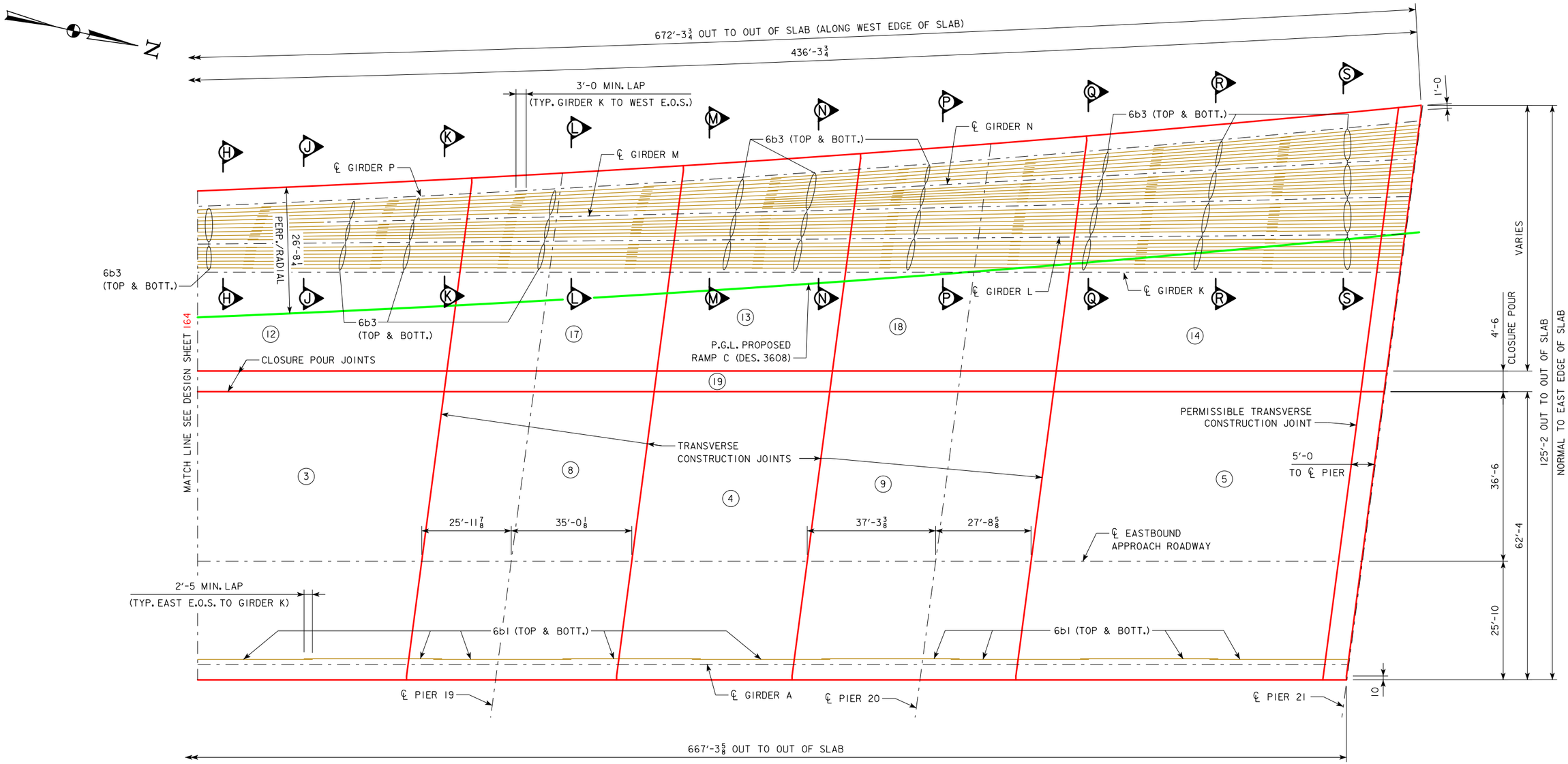

SLAB LONGITUDINAL REINFORCING LAYOUT AND CONCRETE PLACEMENT DIAGRAM

NOTE:

FOR DETAILS OF SECTIONS H-H THRU N-N, SEE DESIGN SHEET 166 .

FOR DETAILS OF SECTIONS P-P THRU S-S, SEE DESIGN SHEET 167 .

SEE DESIGN SHEET 164 FOR NOTES.

whks
engineers + planners + land surveyors

DESIGN FOR VARIABLE SKEW (L.A.)

2271'-6 x VARI. CONTINUOUS WELDED GIRDER BRIDGE-EBL W/14' BIKE TRAIL

138'-10 & 151'-0 7/8 END SPANS MULTIPLE LENGTH INTERIOR SPANS

LONGITUDINAL REINFORCING-UNIT 1

STA. 6792+60.93 - 52' LEFT ℄ I-74 OCTOBER, 2015

SCOTT COUNTY

IOWA DEPARTMENT OF TRANSPORTATION - HIGHWAY DIVISION

DESIGN SHEET NO. 165 OF 282 FILE NO. 30253 DESIGN NO. 3408

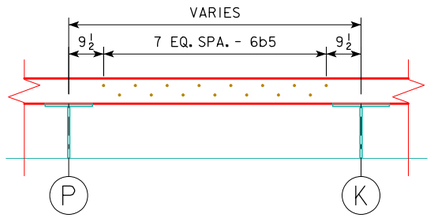

SECTION A-A

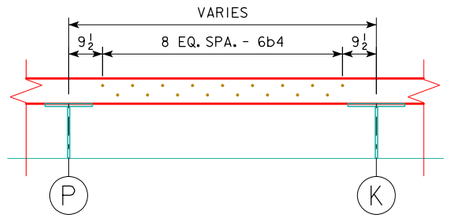

SECTION B-B

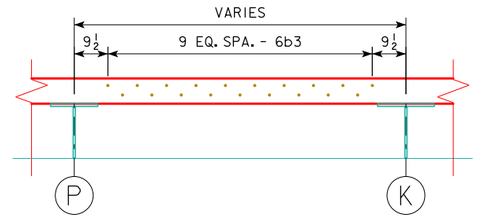

SECTION C-C

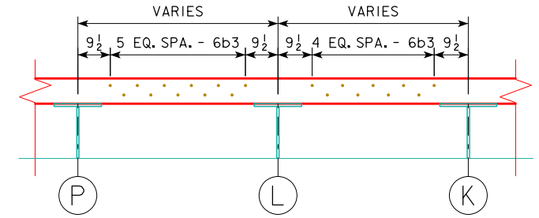

SECTION D-D

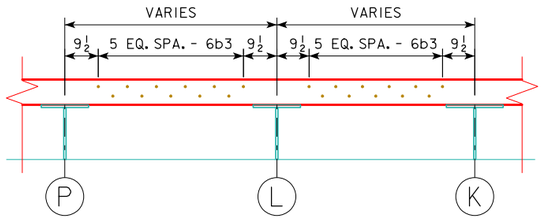

SECTION E-E

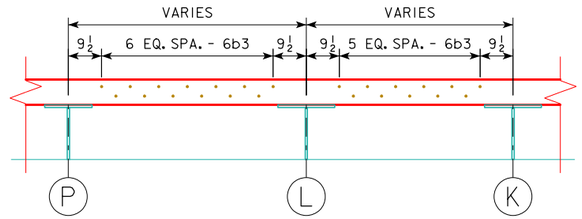

SECTION F-F

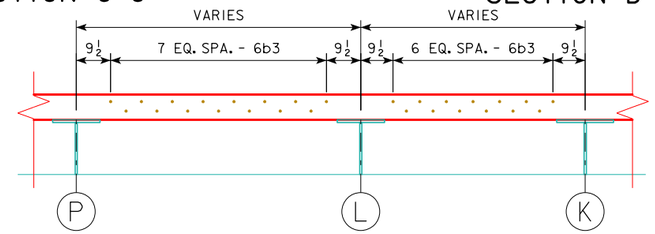

SECTION G-G

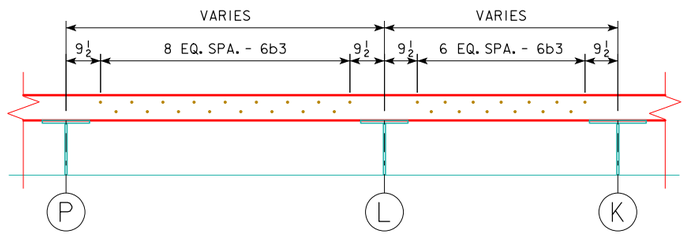

SECTION H-H

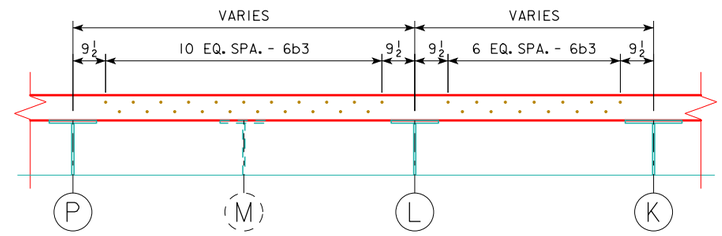

SECTION J-J

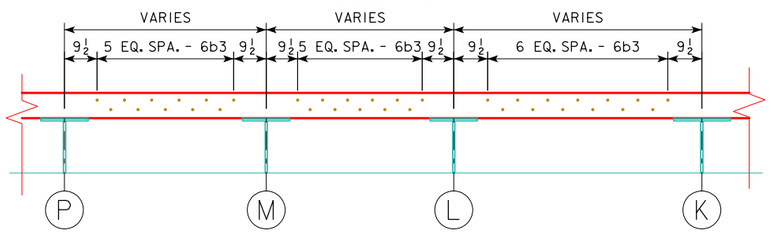

SECTION K-K

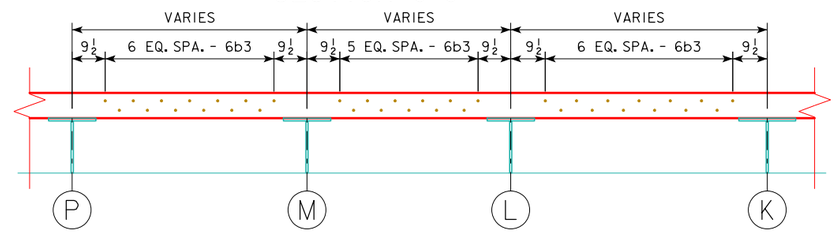

SECTION L-L

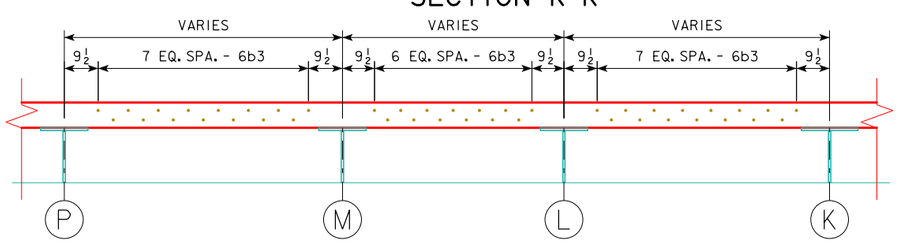

SECTION M-M

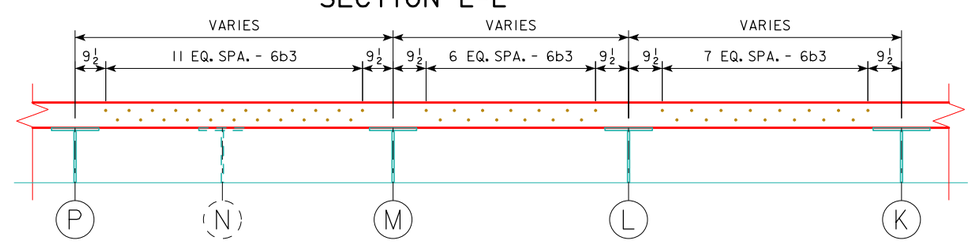

SECTION N-N

NOTE:

FOR PLAN VIEW OF LONGITUDINAL SLAB REINFORCING LAYOUT SEE DESIGN SHEETS 164 165.

LOCATION OF SECTIONS A-A THRU G-G, SEE DESIGN SHEET 164 .

FOR LOCATION OF SECTIONS H-H THRU N-N, SEE DESIGN SHEET 165 .

whks
engineers + planners + land surveyors

DESIGN FOR VARIABLE SKEW (L.A.)

2271'-6 x VARI. CONTINUOUS WELDED GIRDER BRIDGE-EBL W/14' BIKE TRAIL

138'-10 & 151'-0⅞ END SPANS MULTIPLE LENGTH INTERIOR SPANS

TRANSVERSE SLAB SECTIONS-UNIT 1

STA. 6792+60.93 - 52' LEFT ℄ I-74 OCTOBER, 2015

SCOTT COUNTY

IOWA DEPARTMENT OF TRANSPORTATION - HIGHWAY DIVISION

DESIGN SHEET NO. 166 OF 282 FILE NO. 30253 DESIGN NO. 3408

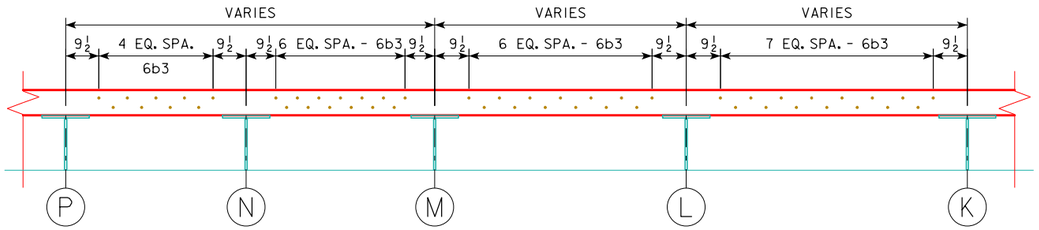

SECTION P-P

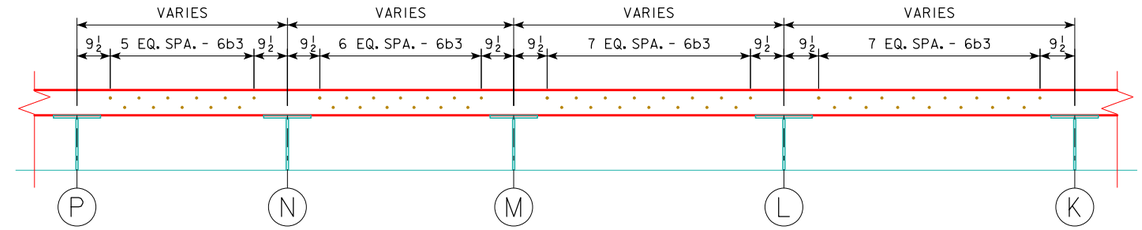

SECTION Q-Q

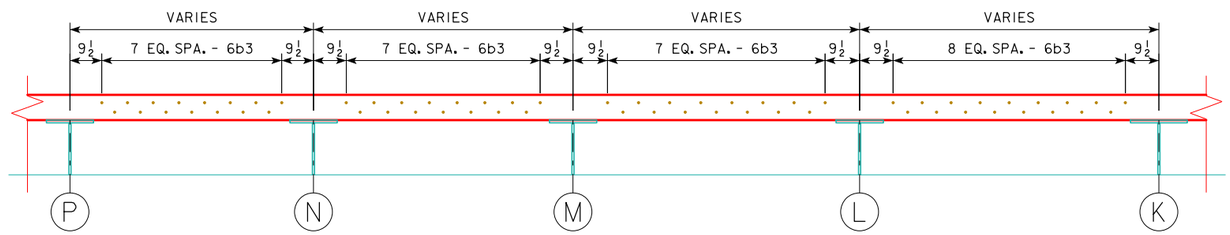

SECTION R-R

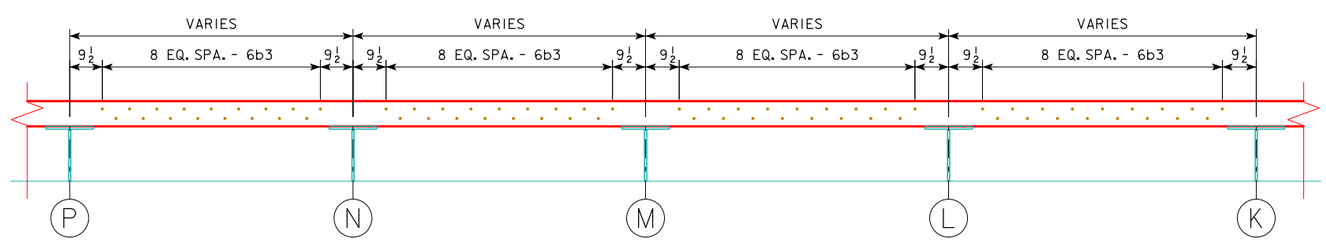

SECTION S-S

NOTE:

FOR PLAN VIEW OF LONGITUDINAL SLAB REINFORCING LAYOUT SEE DESIGN SHEETS 164 165

FOR LOCATION OF SECTIONS P-P THRU S-S, SEE DESIGN SHEET 165

whks
engineers + planners + land surveyors

DESIGN FOR VARIABLE SKEW (L.A.)

2271'-6 x VARI. CONTINUOUS WELDED GIRDER BRIDGE-EBL W/14' BIKE TRAIL

138'-10 & 151'-0⅞ END SPANS MULTIPLE LENGTH INTERIOR SPANS

TRANSVERSE SLAB SECTIONS-UNIT 1

STA. 6792+60.93 - 52' LEFT ℄ I-74 OCTOBER, 2015

SCOTT COUNTY

IOWA DEPARTMENT OF TRANSPORTATION - HIGHWAY DIVISION

DESIGN SHEET NO. 167 OF 282 FILE NO. 30253 DESIGN NO. 3408

REINFORCING BAR LIST-SUPERSTRUCTURE

	BAR	LOCATION	SHAPE	NO.	LENGTH	WEIGHT
EPOXY COATED REINFORCING	6a1-1	SLAB, TRANSVERSE, BOTT.		934	32'-10	46,061
	6a2-1	SLAB, TRANSVERSE, BOTT.		933	36'-0	50,449
	6a3-1	SLAB, TRANSVERSE, BOTT.		937	17'-1	24,043
	6a4-1	SLAB, TRANSVERSE, BOTT., S. END		8	VARIES	198
	6a5-1	SLAB, TRANSVERSE, BOTT., S. END		8	VARIES	216
	6a6-1	SLAB, TRANSVERSE, BOTT., S. END		3	VARIES	51
	6a7-1	SLAB, TRANSVERSE, BOTT., S. END		5	VARIES	94
	6a8-1	SLAB, TRANSVERSE, BOTT.		108	23'-0	3,731
	6a9-1	SLAB, TRANSVERSE, BOTT.		106	24'-6	3,901
	6a10-1	SLAB, TRANSVERSE, BOTT.		106	26'-0	4,140
	6a11-1	SLAB, TRANSVERSE, BOTT.		92	27'-6	3,800
	6a12-1	SLAB, TRANSVERSE, BOTT.		90	29'-6	3,988
	6a13-1	SLAB, TRANSVERSE, BOTT.		73	31'-6	3,454
	6a14-1	SLAB, TRANSVERSE, BOTT.		64	33'-6	3,220
	6a15-1	SLAB, TRANSVERSE, BOTT.		57	35'-6	3,039
	6a16-1	SLAB, TRANSVERSE, BOTT.		64	38'-0	3,653
	6a17-1	SLAB, TRANSVERSE, BOTT.		58	40'-6	3,528
	6a18-1	SLAB, TRANSVERSE, BOTT.		59	43'-3	3,833
	6a19-1	SLAB, TRANSVERSE, BOTT.		59	46'-3	4,099
	6a20-1	SLAB, TRANSVERSE, BOTT., N. END		11	VARIES	403
	6a21-1	SLAB, TRANSVERSE, BOTT., N. END		4	VARIES	61
	6a22-1	SLAB, TRANSVERSE, BOTT., N. END		8	VARIES	247
	6a23-1	SLAB, TRANSVERSE, BOTT., N. END		7	VARIES	177
	6a24-1	SLAB, TRANSVERSE, TOP		932	37'-4	52,262
	6a25-1	SLAB, TRANSVERSE, TOP		934	30'-5	42,671
	6a26-1	SLAB, TRANSVERSE, TOP		937	20'-0	28,147
	6a27-1	SLAB, TRANSVERSE, TOP, S. END		9	VARIES	274
	6a28-1	SLAB, TRANSVERSE, TOP, S. END		7	VARIES	177
	6a29-1	SLAB, TRANSVERSE, TOP, S. END		4	VARIES	65
	6a30-1	SLAB, TRANSVERSE, TOP, S. END		4	VARIES	51
	6a31-1	SLAB, TRANSVERSE, TOP		108	19'-0	3,082
	6a32-1	SLAB, TRANSVERSE, TOP		106	20'-6	3,264
	6a33-1	SLAB, TRANSVERSE, TOP		106	22'-0	3,503
	6a34-1	SLAB, TRANSVERSE, TOP		92	23'-6	3,247
	6a35-1	SLAB, TRANSVERSE, TOP		90	25'-6	3,447
	6a36-1	SLAB, TRANSVERSE, TOP		73	27'-6	3,015
	6a37-1	SLAB, TRANSVERSE, TOP		64	29'-6	2,836
	6a38-1	SLAB, TRANSVERSE, TOP		57	31'-6	2,697
	6a39-1	SLAB, TRANSVERSE, TOP		64	34'-0	3,268
	6a40-1	SLAB, TRANSVERSE, TOP		58	36'-6	3,180
	6a41-1	SLAB, TRANSVERSE, TOP		59	39'-3	3,478
	6a42-1	SLAB, TRANSVERSE, TOP		61	42'-3	3,871
	6a43-1	SLAB, TRANSVERSE, TOP, N. END		10	VARIES	307
	6a44-1	SLAB, TRANSVERSE, TOP, N. END		4	VARIES	70
	6a45-1	SLAB, TRANSVERSE, TOP, N. END		7	VARIES	168
	6a46-1	SLAB, TRANSVERSE, TOP, N. END		8	VARIES	256
	6b1-1	SLAB LONGIT., TOP & BOTT.		3349	40'-0	201,208
	6b2-1	SLAB LONGIT., TOP & BOTT. S. END		197	29'-6	8,729
	6b3-1	SLAB LONGIT., TOP & BOTT. TAPER		739	40'-0	44,399
	6b4-1	SLAB LONGIT., TOP & BOTT., TAPER, S.END		24	30'-0	1,081
	6b5-1	SLAB LONGIT., TOP & BOTT., TAPER, S.END		22	16'-6	545
	5d1-1	DIAPHRAGM		484	3'-6	1,767
	5d2-1	DIAPHRAGM		242	2'-10	715
	5e1-1	DIAPH., TRANSV., PIER 16		3	32'-10	103
	5e2-1	DIAPH., TRANSV., PIER 21		4	31'-7	132
	5e3-1	DIAPH., TRANSV., BTWN. BMS. A THRU K, PIERS 16 & 21		90	9'-3	868
	5e4-1	DIAPH., TRANSV., BTWN. BMS. K THRU P, PIER 16		5	7'-4	38
	5e5-1	DIAPH., TRANSV., BTWN. BMS. K THRU P, PIER 21		20	8'-0	167
	5j1-1	SLAB OVERHANG, TOP		949	6'-3	6,186
		LIGHT POLE BASES - SEE DES. SHT. NO'S. 229 & 230				903
		BARRIER RAILS - SEE DES. SHT. NO. 224				51,142
		EPOXY COATED REINFORCING STEEL-TOTAL (LBS)				647,705
S.S. BARS						
		BARRIER RAILS - SEE DES. SHT. NO. 224				15,667
		REINFORCING STEEL, STAINLESS STEEL - TOTAL (LBS.)				15,667

CONC. PLACEMENT QUANTITIES HIGH PERFORMANCE STR. CONCRETE

LOCATION	QUANTITY
POUR 1, SPAN 16 RT & END DIAPHRAGM	175.6
POUR 2, SPAN 17 RT	101.2
POUR 3, SPAN 18 RT	136.8
POUR 4, SPAN 19 RT	80.7
POUR 5, SPAN 20 RT & END DIAPHRAGM	154.9
POUR 6, PIER 17 RT	116.9
POUR 7, PIER 18 RT	98.2
POUR 8, PIER 19 RT	96.5
POUR 9, PIER 20 RT	102.9
POUR 10, SPAN 16 LT & END DIAPHRAGM	100.5
POUR 11, SPAN 17 LT	63.3
POUR 12, SPAN 18 LT	93.5
POUR 13, SPAN 19 LT	62.4
POUR 14, SPAN 20 LT & END DIAPHRAGM	141.0
POUR 15, PIER 17 LT	70.5
POUR 16, PIER 18 LT	63.5
POUR 17, PIER 19 LT	70.6
POUR 18, PIER 20 LT	85.0
POUR 19, CLOSURE POUR	74.1
POUR 20, PIER 16 & END DIAPHRAGM	30.5
TOTAL CONCRETE (CY)	1918.7

ESTIMATED QUANTITIES SUPERSTR.

ITEM	UNIT	QUANTITY
HIGH PERFORMANCE STRUCTURAL CONCRETE	CY	1,918.7
REINFORCING STEEL, EPOXY COATED	LB	647,705
STRUCTURAL STEEL	LB	2,118,186
STRUCTURAL STEEL (GRADE HPS 70W)	LB	368,381
DISC BEARING ASSEMBLIES	EA	76
REINFORCING STEEL, STAINLESS STEEL	LB	15,667
ALTERNATE AA OPTION 1		
DECK SURFACING (CLASS O PCC)	SY	133
ALTERNATE AA OPTION 2		
DECK SURFACING (CLASS HPC-O PCC)	SY	133

BENT BAR DETAILS

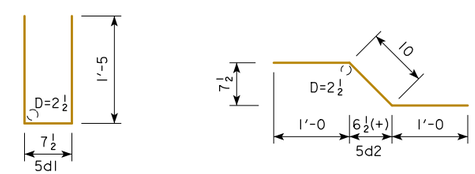

NOTE: ALL DIMENSIONS ARE OUT TO OUT. D= PIN DIAMETER.

NOTE:
DESIGNATION "-1" SIGNIFIES BAR ASSOCIATED WITH UNIT 1 (DESIGN 3408). "-1" NOT SHOWN IN DETAILS FOR CLARITY.

whks
engineers + planners + land surveyors

DESIGN FOR VARIABLE SKEW (L.A.)

227'-6 x VARI. CONTINUOUS WELDED GIRDER BRIDGE-EBL W/14' BIKE TRAIL

138'-10 & 151'-0⅞ END SPANS MULTIPLE LENGTH INTERIOR SPANS

SUPERSTRUCTURE DETAILS-UNIT 1

STA. 6792+60.93 - 52' LEFT ℄ I-74 OCTOBER, 2015

SCOTT COUNTY

IOWA DEPARTMENT OF TRANSPORTATION - HIGHWAY DIVISION

DESIGN SHEET NO. 168 OF 282 FILE NO. 30253 DESIGN NO. 3408

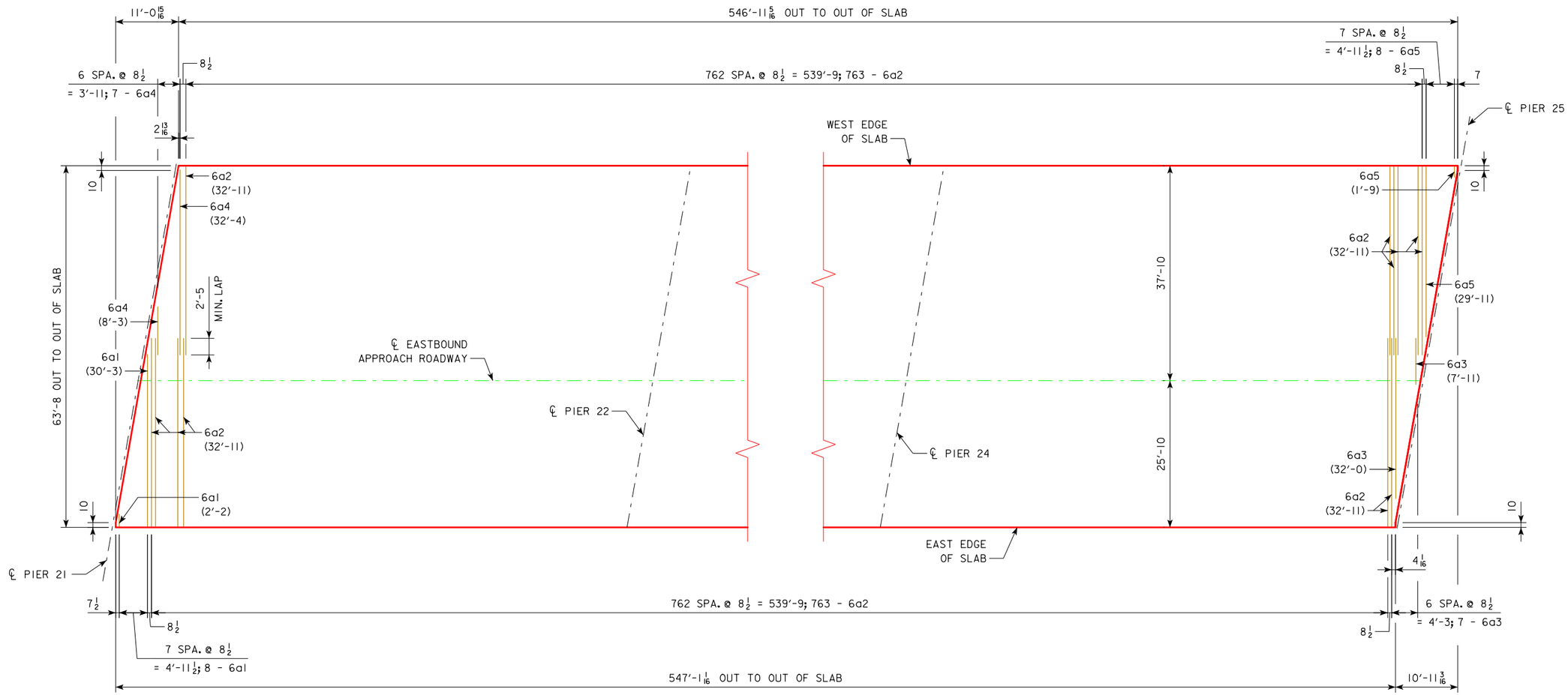

SLAB PLAN REINFORCING LAYOUT - BOTTOM TRANSVERSE

NOTE:

ALL TRANSVERSE DIMENSIONS ARE PERPENDICULAR TO ℄ APPROACH ROADWAY UNLESS NOTED OTHERWISE.

DESIGN FOR VARIABLE SKEW (L.A.)

2271'-6 x VARI. CONTINUOUS WELDED GIRDER BRIDGE-EBL W/14' BIKE TRAIL

138'-10 & 151'-0 7/8 END SPANS MULTIPLE LENGTH INTERIOR SPANS

TRANSVERSE REINFORCING-UNIT 2

STA. 6792+60.93 - 52' LEFT ℄ I-74 OCTOBER, 2015

SCOTT COUNTY

IOWA DEPARTMENT OF TRANSPORTATION - HIGHWAY DIVISION

DESIGN SHEET NO. 169 OF 282 FILE NO. 30253 DESIGN NO. 3408

whks engineers + planners + land surveyors

DESIGN TEAM MG / BB / CF	SCOTT COUNTY	PROJECT NUMBER BRFIM-074-1(200)5--05-82	SHEET NUMBER 170

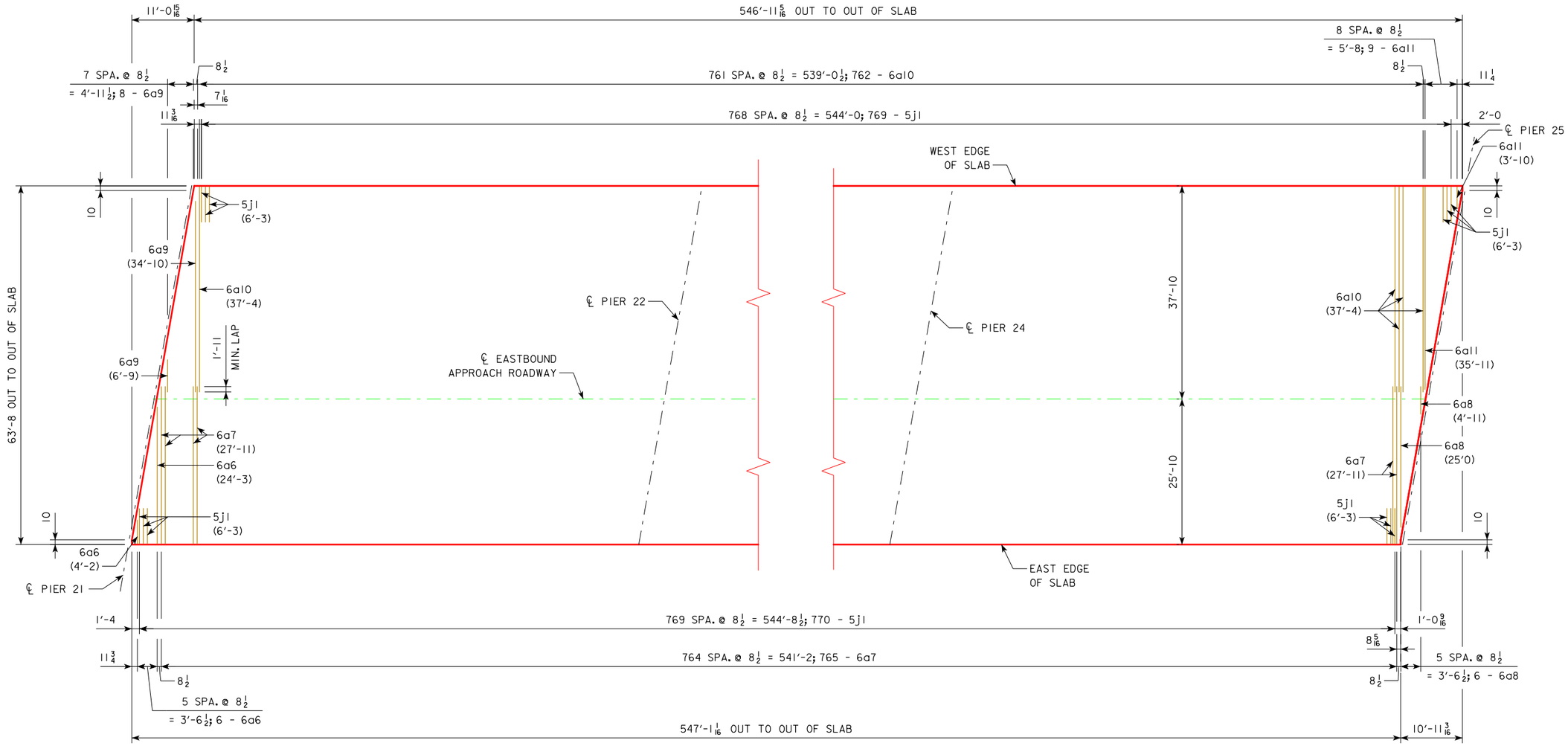

SLAB PLAN REINFORCING LAYOUT - TOP TRANSVERSE

NOTE:

ALL TRANSVERSE DIMENSIONS ARE PERPENDICULAR TO ℄ APPROACH ROADWAY UNLESS NOTED OTHERWISE.

DESIGN FOR VARIABLE SKEW (L.A.)

2271'-6 x VARI. CONTINUOUS WELDED GIRDER BRIDGE-EBL W/14' BIKE TRAIL

138'-10 & 151'-0 7/8 END SPANS MULTIPLE LENGTH INTERIOR SPANS

TRANSVERSE REINFORCING-UNIT 2

STA. 6792+60.93 - 52' LEFT ℄ I-74 OCTOBER, 2015

SCOTT COUNTY

IOWA DEPARTMENT OF TRANSPORTATION - HIGHWAY DIVISION

DESIGN SHEET NO. 170 OF 282 FILE NO. 30253 DESIGN NO. 3408

whks engineers + planners + land surveyors

DESIGN TEAM MG / BB / CF	SCOTT COUNTY	PROJECT NUMBER BRFIM-074-1(200)5--05-82	SHEET NUMBER 171

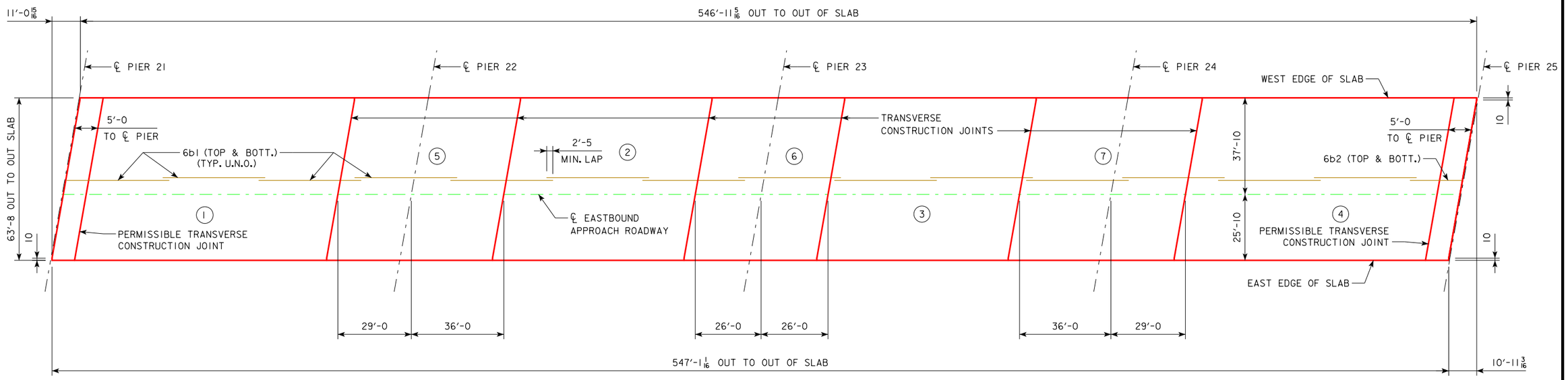

SLAB LONGITUDINAL REINFORCING LAYOUT AND CONCRETE PLACEMENT DIAGRAM

N

NOTES:
ROADWAY SLAB SHALL BE PLACED IN SECTIONS AND SEQUENCES INDICATED. ALTERNATE PROCEDURES FOR PLACING SLAB CONCRETE MAY BE SUBMITTED FOR APPROVAL TOGETHER WITH A STATEMENT OF THE PROPOSED METHOD AND EVIDENCE THAT THE CONTRACTOR POSSESSES THE NECESSARY EQUIPMENT AND FACILITIES TO ACCOMPLISH THE REQUIRED RESULTS.

THE TRANSVERSE CONSTRUCTION JOINTS SHOWN ARE PERPENDICULAR TO THE ℄ EASTBOUND APPROACH ROADWAY AT THE EDGE OF SLAB BELOW THE RAIL.

FOR TRANSVERSE SPACINGS OF THE LONGITUDINAL REINFORCEMENT, SEE TRANSVERSE SECTIONS ON DESIGN SHEET 146.

whks
engineers + planners + land surveyors

DESIGN FOR VARIABLE SKEW (L.A.)
2271'-6 x VARI. CONTINUOUS WELDED GIRDER BRIDGE-EBL W/14' BIKE TRAIL
138'-10 & 151'-0 7/8 END SPANS MULTIPLE LENGTH INTERIOR SPANS
LONGITUDINAL REINFORCING-UNIT 2
STA. 6792+60.93 - 52' LEFT ℄ I-74 OCTOBER, 2015
SCOTT COUNTY
IOWA DEPARTMENT OF TRANSPORTATION - HIGHWAY DIVISION
DESIGN SHEET NO. 171 OF 282 FILE NO. 30253 DESIGN NO. 3408

REINFORCING BAR LIST-SUPERSTRUCTURE

	BAR	LOCATION	SHAPE	NO.	LENGTH	WEIGHT
EPOXY COATED REINFORCING	6a1-2	SLAB, TRANSVERSE, BOTT, END		8	VARIES	195
	6a2-2	SLAB, TRANSVERSE, BOTT,		1526	32'-11	75,447
	6a3-2	SLAB, TRANSVERSE, BOTT, END		7	VARIES	210
	6a4-2	SLAB, TRANSVERSE, BOTT, END		7	VARIES	213
	6a5-2	SLAB, TRANSVERSE, BOTT, END		8	VARIES	190
	6a6-2	SLAB, TRANSVERSE, TOP, END		6	VARIES	128
	6a7-2	SLAB, TRANSVERSE, TOP		765	27'-11	32,077
	6a8-2	SLAB, TRANSVERSE, TOP, END		6	VARIES	135
	6a9-2	SLAB, TRANSVERSE, TOP, END		8	VARIES	250
	6a10-2	SLAB, TRANSVERSE, TOP		762	37'-4	42,729
	6a11-2	SLAB, TRANSVERSE, TOP, END		9	VARIES	269
	6b1-2	SLAB LONGIT., TOP & BOTT.		1988	40'-0	119,439
	6b2-2	SLAB LONGIT., TOP & BOTT., END		142	21'-0	4,479
	5d1-2	DIAPHRAGM		264	3'-6	964
	5d2-2	DIAPHRAGM		132	2'-10	390
	5e1-2	DIAPH., TRANSV.		2	57'-6	120
	5e2-2	DIAPH., TRANSV., BTWN. BMS.		60	9'-3	579
	5j1-2	SLAB OVERHANG, TOP		1547	6'-3	10,085
		LIGHT POLE BASES - SEE DES. SHT. NO. 229				350
		BARRIER RAILS - SEE DES. SHT. NO. 224				35,091
		EPOXY COATED REINFORCING STEEL-TOTAL (LBS)				323,340
S.S. BARS		BARRIER RAILS - SEE DES. SHT. NO. 224				7,892
		REINFORCING STEEL, STAINLESS STEEL - TOTAL (LBS.)				7,892

CONC. PLACEMENT QUANTITIES HIGH PERFORMANCE STR. CONCRETE

LOCATION	QUANTITY
POUR 1, SPAN 21 & END DIAPH.	179.5
POUR 2, SPAN 22	122.4
POUR 3, SPAN 23	122.4
POUR 4, SPAN 24 & END DIAPH.	179.0
POUR 5, PIER 22	106.1
POUR 6, PIER 23	84.9
POUR 7, PIER 24	106.1
TOTAL (CU. YDS.)	900.6

ESTIMATED QUANTITIES SUPERSTR.

ITEM	UNIT	QUANTITY
HIGH PERFORMANCE STRUCTURAL CONCRETE	CY	900.6
REINFORCING STEEL, EPOXY COATED	LB	323,340
STRUCTURAL STEEL	LB	773,779
STRUCTURAL STEEL (GRADE HPS 70W)	LB	140,627
DISC BEARING ASSEMBLIES	EA	35
REINFORCING STEEL, STAINLESS STEEL	LB	7,892

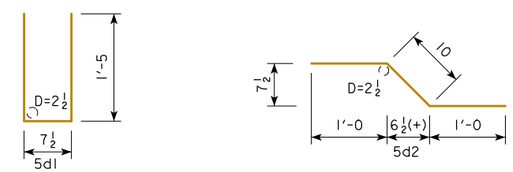

NOTE: ALL DIMENSIONS ARE OUT TO OUT. D= PIN DIAMETER.

BENT BAR DETAILS

NOTE:
DESIGNATION "-2" SIGNIFIES BAR ASSOCIATED WITH UNIT 2 (DESIGN 3408). "-2" NOT SHOWN IN DETAILS FOR CLARITY.

whks
engineers + planners + land surveyors

DESIGN FOR VARIABLE SKEW (L.A.)

2271'-6 x VARI. CONTINUOUS WELDED GIRDER BRIDGE-EBL W/14' BIKE TRAIL

138'-10 & 151'-0⅞ END SPANS MULTIPLE LENGTH INTERIOR SPANS

SUPERSTRUCTURE DETAILS-UNIT 2

STA. 6792+60.93 - 52' LEFT ℄ I-74 OCTOBER, 2015

SCOTT COUNTY

IOWA DEPARTMENT OF TRANSPORTATION - HIGHWAY DIVISION

DESIGN SHEET NO. 172 OF 282 FILE NO. 30253 DESIGN NO. 3408

DESIGN TEAM MG / BB / CF | SCOTT COUNTY | PROJECT NUMBER BRFIM-074-1(200)5--05-82 | SHEET NUMBER 173

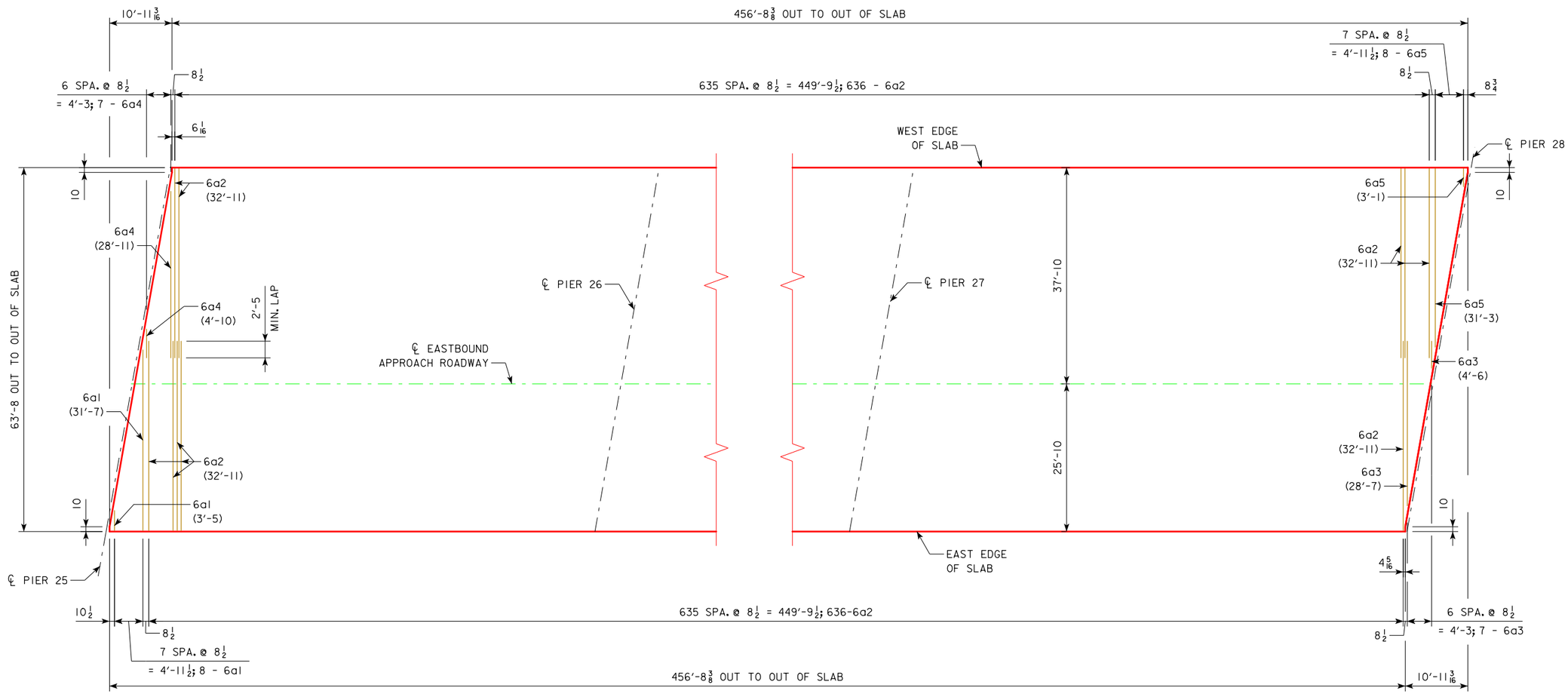

SLAB PLAN REINFORCING LAYOUT - BOTTOM TRANSVERSE

N

NOTE:

ALL TRANSVERSE DIMENSIONS ARE PERPENDICULAR TO ℄ APPROACH ROADWAY UNLESS NOTED OTHERWISE.

whks
engineers + planners + land surveyors

DESIGN FOR VARIABLE SKEW (L.A.)

2271'-6 x VARI. CONTINUOUS WELDED GIRDER BRIDGE-EBL W/14' BIKE TRAIL

138'-10 & 151'-0 7/8 END SPANS MULTIPLE LENGTH INTERIOR SPANS

TRANSVERSE REINFORCING-UNIT 3

STA. 6792+60.93 - 52' LEFT ℄ I-74 OCTOBER, 2015

SCOTT COUNTY

IOWA DEPARTMENT OF TRANSPORTATION - HIGHWAY DIVISION

DESIGN SHEET NO. 173 OF 282 FILE NO. 30253 DESIGN NO. 3408

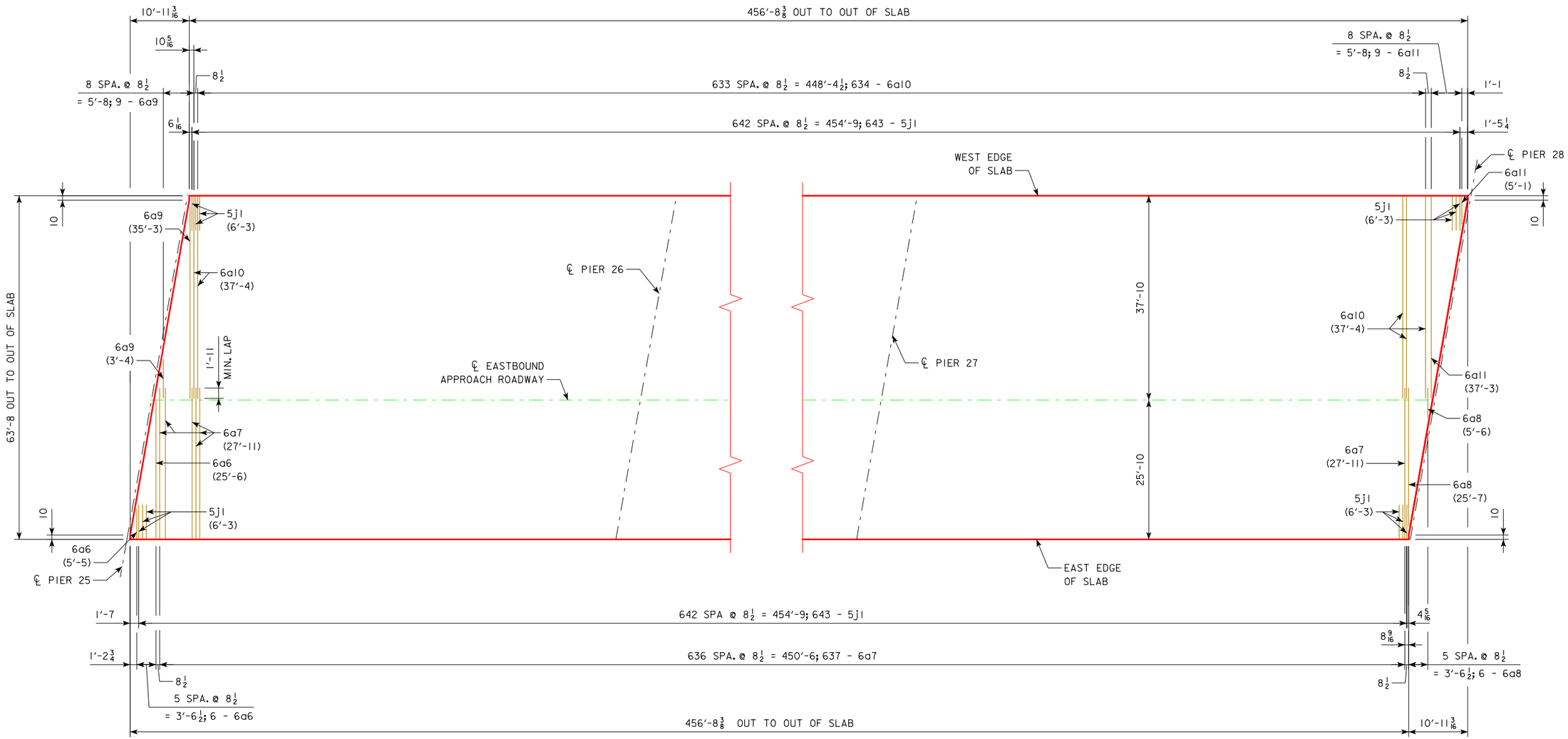

SLAB PLAN REINFORCING LAYOUT - TOP TRANSVERSE

N

NOTE:

ALL TRANSVERSE DIMENSIONS ARE PERPENDICULAR TO ℄ APPROACH ROADWAY UNLESS NOTED OTHERWISE.

whks
engineers + planners + land surveyors

DESIGN FOR VARIABLE SKEW (L.A.)

227'-6 x VARI. CONTINUOUS WELDED GIRDER BRIDGE-EBL W/14' BIKE TRAIL

138'-10 & 151'-0 7/8 END SPANS MULTIPLE LENGTH INTERIOR SPANS

TRANSVERSE REINFORCING-UNIT 3

STA. 6792+60.93 - 52' LEFT ℄ I-74 OCTOBER, 2015

SCOTT COUNTY

IOWA DEPARTMENT OF TRANSPORTATION - HIGHWAY DIVISION

DESIGN SHEET NO. 174 OF 282 FILE NO. 30253 DESIGN NO. 3408

DESIGN TEAM MG / BB / CF	SCOTT COUNTY	PROJECT NUMBER BRFIM-074-1(200)5--05-82	SHEET NUMBER 175

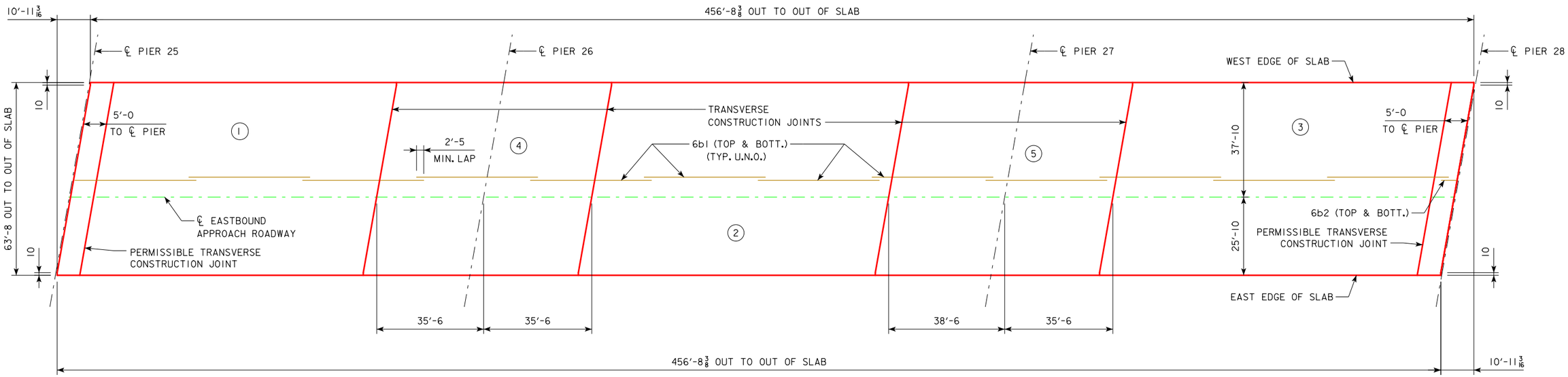

SLAB LONGITUDINAL REINFORCING LAYOUT AND CONCRETE PLACEMENT DIAGRAM

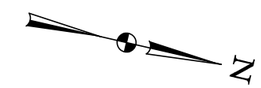

NOTES:
ROADWAY SLAB SHALL BE PLACED IN SECTIONS AND SEQUENCES INDICATED. ALTERNATE PROCEDURES FOR PLACING SLAB CONCRETE MAY BE SUBMITTED FOR APPROVAL TOGETHER WITH A STATEMENT OF THE PROPOSED METHOD AND EVIDENCE THAT THE CONTRACTOR POSSESSES THE NECESSARY EQUIPMENT AND FACILITIES TO ACCOMPLISH THE REQUIRED RESULTS.

THE TRANSVERSE CONSTRUCTION JOINTS SHOWN ARE PERPENDICULAR TO THE ℄ EASTBOUND APPROACH ROADWAY AT THE EDGE OF SLAB BELOW THE RAIL.

FOR TRANSVERSE SPACING OF THE LONGITUDINAL REINFORCEMENT, SEE TRANSVERSE SECTIONS ON DESIGN SHEET 146.

whks
engineers + planners + land surveyors

DESIGN FOR VARIABLE SKEW (L.A.)

2271'-6 x VARI. CONTINUOUS WELDED GIRDER BRIDGE-EBL W/14' BIKE TRAIL

138'-10 & 151'-0 7/8 END SPANS MULTIPLE LENGTH INTERIOR SPANS

LONGITUDINAL REINFORCING-UNIT 3

STA. 6792+60.93 - 52' LEFT ℄ I-74 OCTOBER, 2015

SCOTT COUNTY

IOWA DEPARTMENT OF TRANSPORTATION - HIGHWAY DIVISION

DESIGN SHEET NO. 175 OF 282 FILE NO. 30253 DESIGN NO. 3408

REINFORCING BAR LIST-SUPERSTRUCTURE

	BAR	LOCATION	SHAPE	NO.	LENGTH	WEIGHT
EPOXY COATED REINFORCING	6a1-3	SLAB, TRANSVERSE, BOTT, END		8	VARIES	210
	6a2-3	SLAB, TRANSVERSE, BOTT.		1272	32'-11	62,889
	6a3-3	SLAB, TRANSVERSE, BOTT, END		7	VARIES	174
	6a4-3	SLAB, TRANSVERSE, BOTT, END		7	VARIES	177
	6a5-3	SLAB, TRANSVERSE, BOTT, END		8	VARIES	206
	6a6-3	SLAB, TRANSVERSE, TOP, END		6	VARIES	139
	6a7-3	SLAB, TRANSVERSE, TOP		637	27'-11	26,710
	6a8-3	SLAB, TRANSVERSE, TOP, END		6	VARIES	140
	6a9-3	SLAB, TRANSVERSE, TOP, END		9	VARIES	262
	6a10-3	SLAB, TRANSVERSE, TOP		634	37'-4	35,551
	6a11-3	SLAB, TRANSVERSE, TOP, END		9	VARIES	286
	6b1-3	SLAB LONGIT., TOP & BOTT.		1704	40'-0	102,376
	6b2-3	SLAB LONGIT., TOP & BOTT., END		142	6'-0	1,280
	5d1-3	DIAPHRAGM		264	3'-6	964
	5d2-3	DIAPHRAGM		132	2'-10	390
	5e1-3	DIAPH., TRANSV.		2	57'-6	120
	5e2-3	DIAPH., TRANSV., BTWN. BMS.		60	9'-3	579
	5j1-3	SLAB OVERHANG, TOP		1294	6'-3	8,435
		LIGHT POLE BASES - SEE DES. SHT. NO. 229				350
		BARRIER RAILS - SEE DES. SHT. NO. 224				29,262
		EPOXY COATED REINFORCING STEEL-TOTAL (LBS)				270,500
S.S. BARS		BARRIER RAILS - SEE DES. SHT. NO. 224				6,579
		REINFORCING STEEL, STAINLESS STEEL - TOTAL (LBS.)				6,579

CONC. PLACEMENT QUANTITIES HIGH PERFORMANCE STR. CONCRETE

LOCATION	QUANTITY
POUR 1, SPAN 25 & END DIAPH.	168.1
POUR 2, SPAN 26	160.1
POUR 3, SPAN 27 & END DIAPH.	187.2
POUR 4, PIER 26	115.6
POUR 5, PIER 27	120.2
TOTAL (CU. YDS.)	751.2

ESTIMATED QUANTITIES SUPERSTR.

ITEM	UNIT	QUANTITY
HIGH PERFORMANCE STRUCTURAL CONCRETE	CY	751.2
REINFORCING STEEL, EPOXY COATED	LB	270,500
STRUCTURAL STEEL	LB	771,800
STRUCTURAL STEEL (GRADE HPS 70W)	LB	144,322
DISC BEARING ASSEMBLIES	EA	28
REINFORCING STEEL, STAINLESS STEEL	LB	6,579

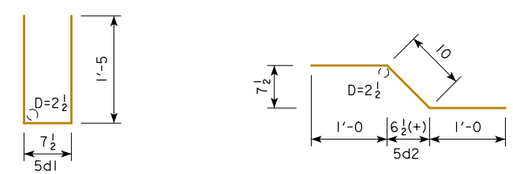

NOTE: ALL DIMENSIONS ARE OUT TO OUT. D= PIN DIAMETER.

BENT BAR DETAILS

NOTE:
DESIGNATION "-3" SIGNIFIES BAR ASSOCIATED WITH UNIT 3 (DESIGN 3408). "-3" NOT SHOWN IN DETAILS FOR CLARITY.

whks
engineers + planners + land surveyors

DESIGN FOR VARIABLE SKEW (L.A.)

2271'-6 x VARI. CONTINUOUS WELDED GIRDER BRIDGE-EBL W/14' BIKE TRAIL

138'-10 & 151'-0⅞ END SPANS MULTIPLE LENGTH INTERIOR SPANS

SUPERSTRUCTURE DETAILS-UNIT 3

STA. 6792+60.93 - 52' LEFT ℄ I-74 OCTOBER, 2015

SCOTT COUNTY

IOWA DEPARTMENT OF TRANSPORTATION - HIGHWAY DIVISION

DESIGN SHEET NO. 176 OF 282 FILE NO. 30253 DESIGN NO. 3408

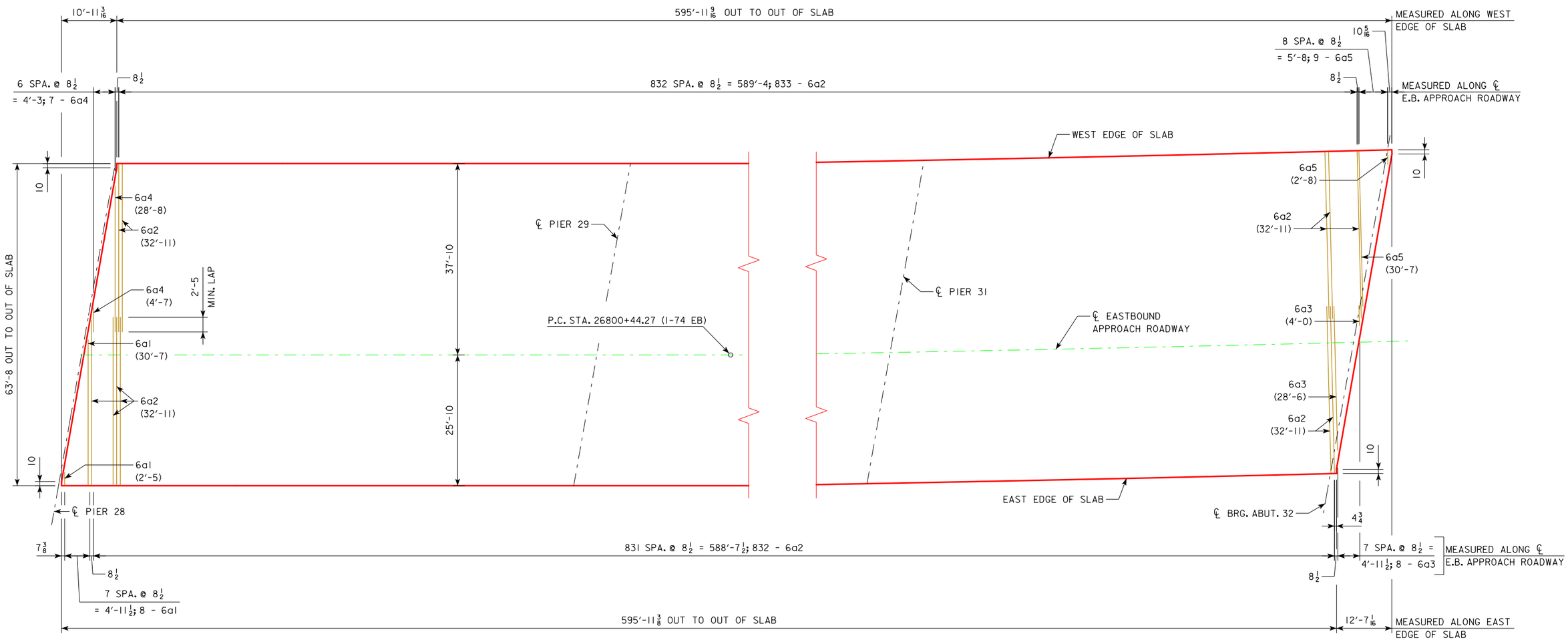

SLAB PLAN REINFORCING LAYOUT - BOTTOM TRANSVERSE

N

NOTE:

ALL TRANSVERSE DIMENSIONS ARE PERPENDICULAR TO ℄ APPROACH ROADWAY UNLESS NOTED OTHERWISE.

DESIGN FOR VARIABLE SKEW (L.A.)

2271'-6 x VARI. CONTINUOUS WELDED GIRDER BRIDGE-EBL W/14' BIKE TRAIL

138'-10 & 151'-0 7/8 END SPANS MULTIPLE LENGTH INTERIOR SPANS

TRANSVERSE REINFORCING-UNIT 4

STA. 6792+60.93 - 52' LEFT ℄ I-74 OCTOBER, 2015

SCOTT COUNTY

IOWA DEPARTMENT OF TRANSPORTATION - HIGHWAY DIVISION

DESIGN SHEET NO. 177 OF 282 FILE NO. 30253 DESIGN NO. 3408

whks engineers + planners + land surveyors

DESIGN TEAM CF / BB / MG	SCOTT COUNTY	PROJECT NUMBER BRFIM-074-1(200)5--05-82	SHEET NUMBER 178

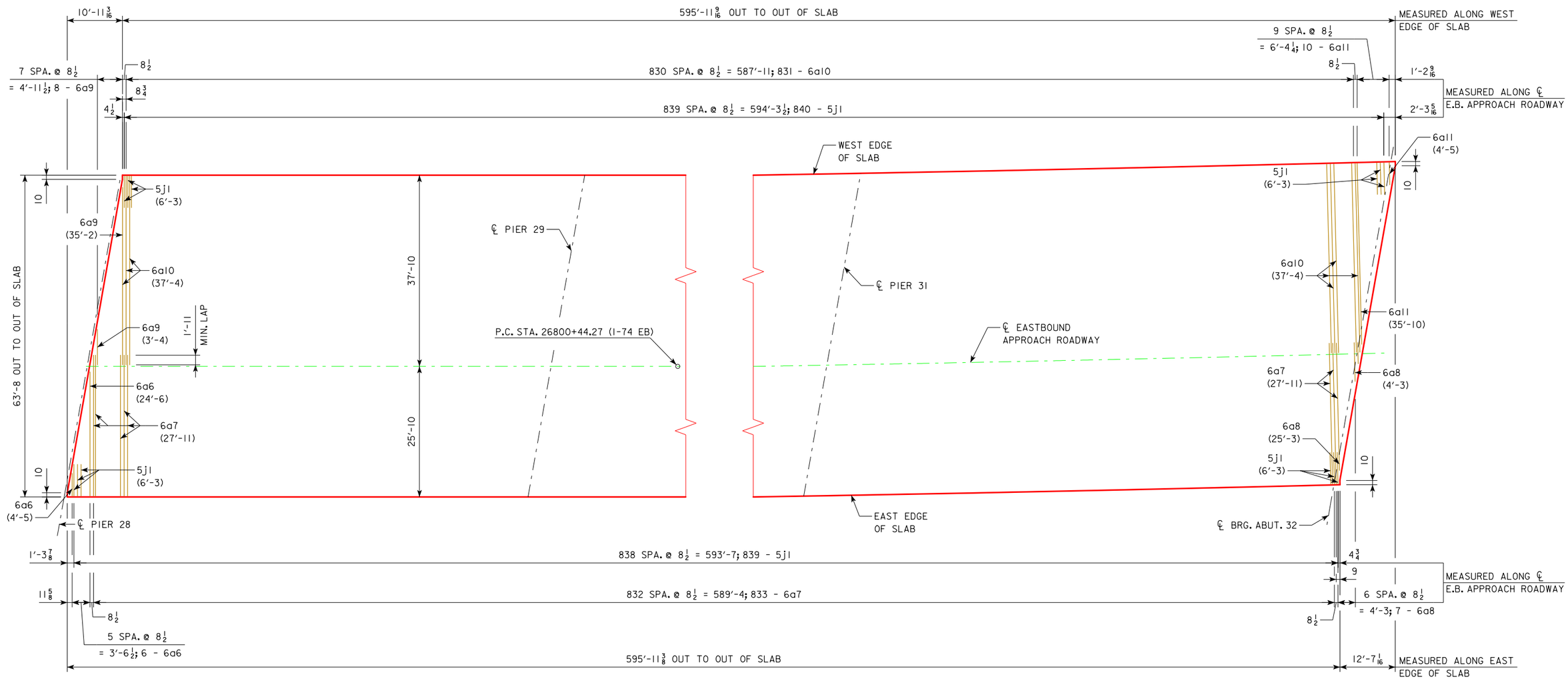

SLAB PLAN REINFORCING LAYOUT - TOP TRANSVERSE

N

NOTE:

ALL TRANSVERSE DIMENSIONS ARE PERPENDICULAR TO ℄ APPROACH ROADWAY UNLESS NOTED OTHERWISE.

DESIGN FOR VARIABLE SKEW (L.A.)

2271'-6 x VARI. CONTINUOUS WELDED GIRDER BRIDGE-EBL W/14' BIKE TRAIL

138'-10 & 151'-0 7/8 END SPANS MULTIPLE LENGTH INTERIOR SPANS

TRANSVERSE REINFORCING-UNIT 4

STA. 6792+60.93 - 52' LEFT ℄ I-74 OCTOBER, 2015

SCOTT COUNTY

IOWA DEPARTMENT OF TRANSPORTATION - HIGHWAY DIVISION

DESIGN SHEET NO. 178 OF 282 FILE NO. 30253 DESIGN NO. 3408

whks engineers + planners + land surveyors

DESIGN TEAM CF / BB / MG	SCOTT COUNTY	PROJECT NUMBER BRFIM-074-1(200)5--05-82	SHEET NUMBER 179

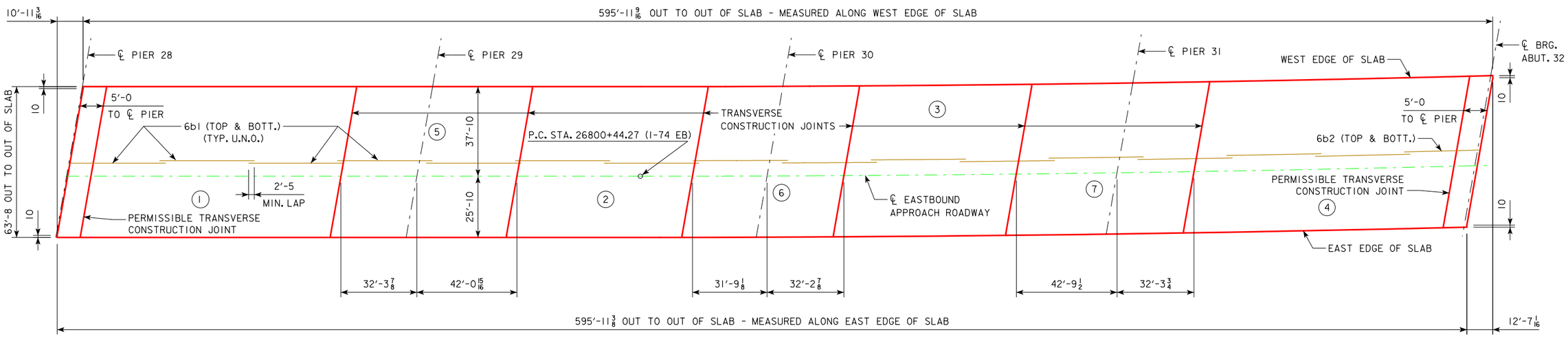

SLAB LONGITUDINAL REINFORCING LAYOUT AND CONCRETE PLACEMENT DIAGRAM

N

NOTES:
ROADWAY SLAB SHALL BE PLACED IN SECTIONS AND SEQUENCES INDICATED. ALTERNATE PROCEDURES FOR PLACING SLAB CONCRETE MAY BE SUBMITTED FOR APPROVAL TOGETHER WITH A STATEMENT OF THE PROPOSED METHOD AND EVIDENCE THAT THE CONTRACTOR POSSESSES THE NECESSARY EQUIPMENT AND FACILITIES TO ACCOMPLISH THE REQUIRED RESULTS.

THE TRANSVERSE CONSTRUCTION JOINTS SHOWN ARE PERPENDICULAR TO THE ℄ EASTBOUND APPROACH ROADWAY AT THE EDGE OF SLAB BELOW THE RAIL.

FOR TRANSVERSE SPACINGS OF THE LONGITUDINAL REINFORCEMENT, SEE TRANSVERSE SECTIONS ON DESIGN SHEET 146.

whks
engineers + planners + land surveyors

DESIGN FOR VARIABLE SKEW (L.A.)

2271'-6 x VARI. CONTINUOUS WELDED GIRDER BRIDGE-EBL W/14' BIKE TRAIL

138'-10 & 151'-0 7/8 END SPANS MULTIPLE LENGTH INTERIOR SPANS

LONGITUDINAL REINFORCING-UNIT 4

STA. 6792+60.93 - 52' LEFT ℄ I-74 OCTOBER, 2015

SCOTT COUNTY

IOWA DEPARTMENT OF TRANSPORTATION - HIGHWAY DIVISION

DESIGN SHEET NO. 179 OF 282 FILE NO. 30253 DESIGN NO. 3408

REINFORCING BAR LIST-SUPERSTRUCTURE

	BAR	LOCATION	SHAPE	NO.	LENGTH	WEIGHT
EPOXY COATED REINFORCING	6a1-4	SLAB, TRANSVERSE, BOTT, END		8	VARIES	198
	6a2-4	SLAB, TRANSVERSE, BOTT.		1665	32'-11	82,319
	6a3-4	SLAB, TRANSVERSE, BOTT, END		8	VARIES	195
	6a4-4	SLAB, TRANSVERSE, BOTT, END		7	VARIES	175
	6a5-4	SLAB, TRANSVERSE, BOTT, END		9	VARIES	225
	6a6-4	SLAB, TRANSVERSE, TOP, END		6	VARIES	130
	6a7-4	SLAB, TRANSVERSE, TOP		833	27'-11	34,928
	6a8-4	SLAB, TRANSVERSE, TOP, END		7	VARIES	155
	6a9-4	SLAB, TRANSVERSE, TOP, END		8	VARIES	231
	6a10-4	SLAB, TRANSVERSE, TOP.		831	37'-4	46,598
	6a11-4	SLAB, TRANSVERSE, TOP, END		10	VARIES	302
	6b1-4	SLAB LONGIT., TOP & BOTT.		2130	40'-0	127,970
	6b2-4	SLAB LONGIT., TOP & BOTT., END		142	32'-9	6,985
	5d1-4	DIAPHRAGM		264	3'-6	964
	5d2-4	DIAPHRAGM		132	2'-10	390
	5e1-4	DIAPH., TRANSV.		1	57'-6	60
	5e2-4	DIAPH., TRANSV.		1	57'-10	60
	5e3-4	DIAPH., TRANSV., BTWN. BMS.		60	9'-3	579
	5j1-4	SLAB OVERHANG, TOP		1687	6'-3	10,997
		LIGHT POLE BASES - SEE DES. SHT. NO. 229				350
		BARRIER RAILS - SEE DES. SHT. NO. 224				39,645
		EPOXY COATED REINFORCING STEEL-TOTAL (LBS)				353,456
S.S. BARS		BARRIER RAILS - SEE DES. SHT. NO. 224				9,160
		REINFORCING STEEL, STAINLESS STEEL - TOTAL (LBS.)				9,160

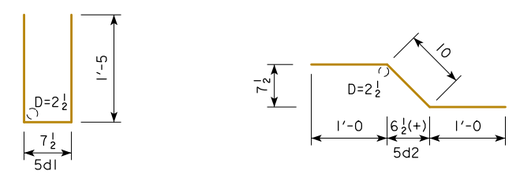

NOTE: ALL DIMENSIONS ARE OUT TO OUT. D= PIN DIAMETER.

BENT BAR DETAILS

CONC. PLACEMENT QUANTITIES HIGH PERFORMANCE STR. CONCRETE

LOCATION	QUANTITY
POUR 1, SPAN 28 & END DIAPH.	191.6
POUR 2, SPAN 29	121.1
POUR 3, SPAN 30	118.9
POUR 4, SPAN 31 & END DIAPH.	198.5
POUR 5, PIER 29	121.4
POUR 6, PIER 30	104.7
POUR 7, PIER 31	122.5
TOTAL (CU. YDS.)	978.7

ESTIMATED QUANTITIES SUPERSTR.

	UNIT	QUANTITY
HIGH PERFORMANCE STRUCTURAL CONCRETE	CY	978.7
REINFORCING STEEL, EPOXY COATED	LB	353,456
STRUCTURAL STEEL	LB	975,429
STRUCTURAL STEEL (GRADE HPS 70W)	LB	214,124
DISC BEARING ASSEMBLIES	EA	35
REINFORCING STEEL, STAINLESS STEEL	LB	9,160

NOTE:
DESIGNATION "-4" SIGNIFIES BAR ASSOCIATED WITH UNIT 4 (DESIGN 3408). "-4" NOT SHOWN IN DETAILS FOR CLARITY.

whks
engineers + planners + land surveyors

DESIGN FOR VARIABLE SKEW (L.A.)

227'-6 x VARI. CONTINUOUS WELDED GIRDER BRIDGE-EBL W/14' BIKE TRAIL

138'-10 & 151'-0⅞ END SPANS MULTIPLE LENGTH INTERIOR SPANS

SUPERSTRUCTURE DETAILS-UNIT 4

STA. 6792+60.93 - 52' LEFT ℄ I-74 OCTOBER, 2015

SCOTT COUNTY

IOWA DEPARTMENT OF TRANSPORTATION - HIGHWAY DIVISION

DESIGN SHEET NO. 180 OF 282 FILE NO. 30253 DESIGN NO. 3408

BENCH MARK NO. 500: STA. 6781+18.92 LT. 161.19'
ELEV. 575.797, CHISELED "X" IN BOLT E. SIDE
CONCRETE STRUCTURE

TABLE OF BEAM LINE HAUNCH ELEVATIONS

BEAM LINE	℄ BRG. PIER 16											℄ BOLTED SPLICE 1				℄ PIER 17					℄ BOLTED SPLICE 2							℄ BOLTED SPLICE 3				℄ PIER 18			℄ BOLTED SPLICE 4		
	LINE 1	LINE 2	LINE 3	LINE 4	LINE 5	LINE 6	LINE 7	LINE 8	LINE 9	LINE 10	LINE 11	LINE 12	LINE 13	LINE 14	LINE 15	LINE 16	LINE 17	LINE 18	LINE 19	LINE 20	LINE 190	LINE 191	LINE 192	LINE 193	LINE 194	LINE 195	LINE 196	LINE 197	LINE 198	LINE 199	LINE 200	LINE 201	LINE 202	LINE 203	LINE 204	LINE 205	LINE 206
P	615.45	615.22	614.99	614.75	614.50	614.24	613.97	613.69	613.40	613.10	612.79	612.48	612.23	611.98	611.74	611.50	611.25	611.00	610.76	610.53	610.29	610.05	609.80	609.55	609.30	609.04	608.78	608.52	608.26	608.00	607.75	607.49	607.25	607.01	606.77	606.53	606.28
													S. END GIRDER L			℄ PIER 17					℄ BOLTED SPLICE 2							℄ BOLTED SPLICE 3				℄ PIER 18			℄ BOLTED SPLICE 4		
													LINE 75	LINE 76	LINE 77	LINE 78	LINE 79	LINE 80	LINE 81	LINE 82	LINE 83	LINE 84	LINE 85	LINE 86	LINE 87	LINE 88	LINE 89	LINE 90	LINE 91	LINE 92	LINE 93	LINE 94	LINE 95	LINE 96	LINE 97	LINE 98	LINE 99
L													612.48	612.18	611.89	611.60	611.36	611.12	610.88	610.65	610.42	610.18	609.93	609.69	609.44	609.18	608.93	608.67	608.41	608.15	607.89	607.64	607.40	607.17	606.94	606.70	606.45
	℄ BRG. PIER 16											℄ BOLTED SPLICE 1				℄ PIER 17					℄ BOLTED SPLICE 2							℄ BOLTED SPLICE 3				℄ PIER 18			℄ BOLTED SPLICE 4		
	LINE 1	LINE 2	LINE 3	LINE 4	LINE 5	LINE 6	LINE 7	LINE 8	LINE 9	LINE 10	LINE 11	LINE 12	LINE 13	LINE 14	LINE 15	LINE 16	LINE 17	LINE 18	LINE 19	LINE 20	LINE 21	LINE 22	LINE 23	LINE 24	LINE 25	LINE 26	LINE 27	LINE 28	LINE 29	LINE 30	LINE 31	LINE 32	LINE 33	LINE 34	LINE 35	LINE 36	LINE 37
K	615.61	615.39	615.17	614.94	614.70	614.45	614.19	613.91	613.62	613.31	613.01	612.69	612.44	612.19	611.95	611.70	611.46	611.22	610.99	610.76	610.53	610.28	610.03	609.78	609.53	609.26	609.00	608.73	608.48	608.24	608.00	607.77	607.52	607.28	607.05	606.81	606.57
J	615.82	615.62	615.41	615.19	614.96	614.71	614.45	614.17	613.88	613.57	613.26	612.94	612.68	612.43	612.18	611.94	611.69	611.45	611.22	610.99	610.77	610.53	610.28	610.04	609.78	609.51	609.25	608.98	608.73	608.48	608.24	608.01	607.76	607.52	607.29	607.06	606.82
H	616.06	615.86	615.66	615.45	615.23	614.98	614.72	614.45	614.15	613.84	613.52	613.19	612.93	612.67	612.42	612.17	611.93	611.69	611.46	611.23	611.01	610.77	610.53	610.28	610.03	609.76	609.49	609.22	608.97	608.72	608.48	608.24	608.00	607.76	607.53	607.30	607.07
G	616.30	616.10	615.89	615.68	615.45	615.21	614.95	614.67	614.37	614.07	613.75	613.43	613.17	612.91	612.66	612.41	612.16	611.92	611.69	611.47	611.24	611.00	610.76	610.51	610.26	609.99	609.72	609.45	609.20	608.96	608.72	608.48	608.24	608.00	607.77	607.54	607.30
F	616.53	616.33	616.13	615.91	615.68	615.44	615.18	614.90	614.61	614.30	613.98	613.66	613.40	613.14	612.89	612.65	612.40	612.16	611.93	611.70	611.48	611.24	611.00	610.75	610.49	610.23	609.96	609.69	609.44	609.19	608.95	608.72	608.47	608.24	608.00	607.77	607.54
E	616.77	616.57	616.36	616.15	615.92	615.67	615.41	615.14	614.84	614.53	614.22	613.90	613.64	613.38	613.13	612.88	612.64	612.40	612.17	611.94	611.72	611.48	611.24	610.99	610.73	610.47	610.20	609.93	609.68	609.43	609.19	608.95	608.71	608.47	608.24	608.01	607.77
D	617.01	616.81	616.60	616.38	616.15	615.90	615.64	615.37	615.07	614.77	614.45	614.13	613.87	613.61	613.37	613.12	612.88	612.64	612.40	612.18	611.96	611.72	611.47	611.23	610.97	610.71	610.44	610.17	609.92	609.67	609.43	609.19	608.95	608.71	608.47	608.24	608.01
C	617.10	616.90	616.69	616.47	616.24	615.99	615.73	615.46	615.16	614.86	614.54	614.22	613.97	613.71	613.46	613.22	612.97	612.73	612.50	612.28	612.05	611.81	611.57	611.32	611.06	610.80	610.53	610.26	610.01	609.76	609.52	609.29	609.04	608.80	608.57	608.34	608.10
B	616.96	616.75	616.54	616.32	616.09	615.84	615.58	615.30	615.01	614.70	614.39	614.07	613.82	613.56	613.32	613.07	612.83	612.59	612.36	612.13	611.91	611.66	611.42	611.17	610.91	610.65	610.39	610.12	609.87	609.62	609.38	609.14	608.90	608.66	608.42	608.19	607.95
A	616.82	616.61	616.39	616.17	615.93	615.68	615.42	615.15	614.85	614.55	614.24	613.92	613.67	613.42	613.17	612.93	612.68	612.44	612.21	611.99	611.76	611.52	611.27	611.02	610.76	610.50	610.24	609.97	609.72	609.48	609.24	609.00	608.75	608.51	608.28	608.04	607.80

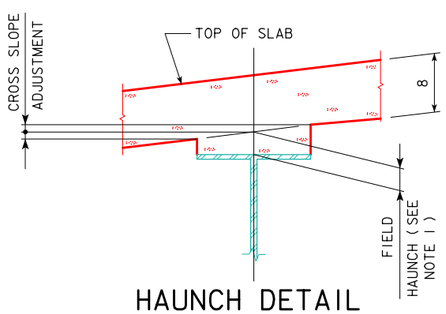

HAUNCH DETAIL

NOTE 1:
TO CALCULATE FIELD HAUNCH NEEDED AT EACH LOCATION, SURVEY THE BEAM TOPS CONSISTENT WITH THE SPACINGS SHOWN ON THE "SLAB ELEVATION PLAN" SHEETS. SUBTRACT THE SURVEYED BEAM SHOT FROM THE "BEAM LINE HAUNCH ELEVATION". THIS VALUE WILL BE THE HAUNCH NEEDED (SEE "FIELD HAUNCH" IN HAUNCH DETAIL). THE "BEAM LINE HAUNCH ELEVATION" INCLUDES ADJUSTMENTS FOR SLAB THICKNESSES AND ANTICIPATED DEFLECTIONS. NO ADDITIONAL CALCULATIONS ARE REQUIRED. IF THE FIELD HAUNCH EXCEEDS THE MAXIMUMS AND MINIMUMS, SHOWN IN INCHES AND DECIMALS FEET IN THE MISC. DATA TABLE, ADJUSTMENTS TO THE GRADE OR ADDITIONAL HAUNCH REINFORCEMENT WILL BE REQUIRED.

NOTE 2:
BRIDGE SEAT ELEVATIONS ARE SET BASED ON THEORETICAL CAMBER AND BEAM DEFLECTIONS. THESE BRIDGE SEATS WILL PROVIDE A THEORETICAL BEAM HAUNCH WITHIN DESIGN PARAMETERS. FIELD HAUNCHES ARE DETERMINED USING SURVEYED TOP OF BEAM ELEVATIONS AND "BEAM LINE HAUNCH ELEVATION" DATA. ALLOWABLE MAXIMUM AND MINIMUM "FIELD HAUNCH" VALUES, SHOWN IN INCHES AND DECIMALS FEET, ARE GIVEN IN THE "MISCELLANEOUS DATA" TABLE. "CROSS SLOPE ADJUSTMENT" VALUES WILL AID THE CONTRACTOR IN DETERMINING ACTUAL FORMED HAUNCH DIMENSIONS AT THE EDGES OF THE TOP FLANGE.

NOTE:
LINE NUMBERS CORRESPOND TO THE HEXAGONAL NUMBERS SHOWN ON DESIGN SHEETS 192 -193.

whks
engineers + planners + land surveyors

DESIGN FOR VARIABLE SKEW (L.A.)
2271'-6 x VARI. CONTINUOUS WELDED GIRDER BRIDGE-EBL W/14' BIKE TRAIL
138'-10 & 151'-0 7/8 END SPANS MULTIPLE LENGTH INTERIOR SPANS
BEAM LINE HAUNCH DATA-UNIT 1
STA. 6792+60.93 - 52' LEFT ℄ I-74 OCTOBER, 2015
SCOTT COUNTY
IOWA DEPARTMENT OF TRANSPORTATION - HIGHWAY DIVISION
DESIGN SHEET NO. 181 OF 282 FILE NO. 30253 DESIGN NO. 3408

DESIGN TEAM MG / BB / CF | SCOTT COUNTY | PROJECT NUMBER BRFIM-074-1(200)5--05-82 | SHEET NUMBER 182

BENCH MARK NO. 500: STA. 6781+18.92 LT. 161.19'
ELEV. 575.797, CHISELED "X" IN BOLT E. SIDE
CONCRETE STRUCTURE

TABLE OF BEAM LINE HAUNCH ELEVATIONS

BEAM LINE							℄ BOLTED SPLICE 5			℄ PIER 19				℄ BOLTED SPLICE 6					℄ BOLTED SPLICE 7					℄ PIER 20		℄ BOLTED SPLICE 8										℄ BRG. PIER 21
	LINE 207	LINE 208	LINE 209	LINE 210	LINE 211	LINE 212	LINE 213	LINE 214	LINE 215	LINE 216	LINE 217	LINE 218	LINE 219	LINE 220	LINE 221	LINE 222	LINE 223	LINE 224	LINE 225	LINE 226	LINE 227	LINE 228	LINE 229	LINE 230	LINE 231	LINE 232	LINE 233	LINE 234	LINE 235	LINE 236	LINE 237	LINE 238	LINE 239	LINE 240	LINE 241	LINE 242	LINE 243
P	606.02	605.76	605.49	605.21	604.92	604.63	604.34	604.04	603.74	603.44	603.20	602.97	602.73	602.50	602.22	601.94	601.36	601.07	600.82	600.56	600.32	600.07	600.07	599.83	599.61	599.39	599.17	598.92	598.66	598.39	598.11	597.82	597.53	597.23	596.92	596.62	596.31
																				S. END GIRDER N				℄ PIER 20			℄ BOLTED SPLICE 8										℄ BRG. PIER 21
																				LINE 172	LINE 173	LINE 174	LINE 175	LINE 176	LINE 177	LINE 178	LINE 179	LINE 180	LINE 181	LINE 182	LINE 183	LINE 184	LINE 185	LINE 186	LINE 187	LINE 188	LINE 189
N																				601.03	600.75	600.47	600.20	599.93	599.71	599.50	599.28	599.04	598.78	598.52	598.25	597.97	597.68	597.38	597.08	596.78	596.47
			S. END GIRDER M							℄ PIER 19				℄ BOLTED SPLICE 6					℄ BOLTED SPLICE 7					℄ PIER 20		℄ BOLTED SPLICE 8										℄ BRG. PIER 21
			LINE 137	LINE 138	LINE 139	LINE 140	LINE 141	LINE 142	LINE 143	LINE 144	LINE 145	LINE 146	LINE 147	LINE 148	LINE 149	LINE 150	LINE 151	LINE 152	LINE 153	LINE 154	LINE 155	LINE 156	LINE 157	LINE 158	LINE 159	LINE 160	LINE 161	LINE 162	LINE 163	LINE 164	LINE 165	LINE 166	LINE 167	LINE 168	LINE 169	LINE 170	LINE 171
M			605.63	605.35	605.06	604.76	604.46	604.16	603.86	603.57	603.33	603.10	602.87	602.64	602.37	602.09	601.81	601.53	601.24	601.00	600.75	600.51	600.27	600.04	599.82	599.61	599.40	599.16	598.92	598.67	598.40	598.13	597.84	597.55	597.25	596.95	596.65
							℄ BOLTED SPLICE 5			℄ PIER 19				℄ BOLTED SPLICE 6					℄ BOLTED SPLICE 7					℄ PIER 20		℄ BOLTED SPLICE 8										℄ BRG. PIER 21
	LINE 100	LINE 101	LINE 102	LINE 103	LINE 104	LINE 105	LINE 106	LINE 107	LINE 108	LINE 109	LINE 110	LINE 111	LINE 112	LINE 113	LINE 114	LINE 115	LINE 116	LINE 117	LINE 118	LINE 119	LINE 120	LINE 121	LINE 122	LINE 123	LINE 124	LINE 125	LINE 126	LINE 127	LINE 128	LINE 129	LINE 130	LINE 131	LINE 132	LINE 133	LINE 134	LINE 135	LINE 136
L	606.20	605.93	605.65	605.37	605.07	604.77	604.47	604.20	603.94	603.67	603.44	603.21	602.98	602.76	602.49	602.22	601.95	601.67	601.38	601.14	600.90	600.66	600.43	600.20	599.99	599.78	599.58	599.35	599.11	598.86	598.60	598.33	598.04	597.75	597.45	597.15	596.85
							℄ BOLTED SPLICE 5			℄ PIER 19				℄ BOLTED SPLICE 6					℄ BOLTED SPLICE 7				℄ PIER 20			℄ BOLTED SPLICE 8										℄ BRG. PIER 21
	LINE 38	LINE 39	LINE 40	LINE 41	LINE 42	LINE 43	LINE 44	LINE 45	LINE 46	LINE 47	LINE 48	LINE 49	LINE 50	LINE 51	LINE 52	LINE 53	LINE 54	LINE 55	LINE 56	LINE 57	LINE 58	LINE 59	LINE 60	LINE 61	LINE 62	LINE 63	LINE 64	LINE 65	LINE 66	LINE 67	LINE 68	LINE 69	LINE 70	LINE 71	LINE 72	LINE 73	LINE 74
K	606.33	606.07	605.80	605.52	605.23	604.94	604.64	604.37	604.10	603.84	603.59	603.34	603.10	602.87	602.63	602.40	602.16	601.92	601.68	601.43	601.16	600.90	600.64	600.39	600.16	599.93	599.71	599.49	599.26	599.01	598.76	598.49	598.22	597.93	597.64	597.35	597.05
J	606.58	606.32	606.06	605.78	605.49	605.19	604.89	604.61	604.34	604.08	603.82	603.58	603.34	603.10	602.87	602.63	602.40	602.16	601.91	601.67	601.40	601.13	600.87	600.62	600.39	600.17	599.95	599.73	599.50	599.26	599.00	598.74	598.46	598.17	597.88	597.58	597.28
H	606.83	606.58	606.31	606.03	605.74	605.44	605.14	604.86	604.58	604.31	604.06	603.81	603.57	603.33	603.10	602.87	602.63	602.39	602.15	601.90	601.64	601.37	601.11	600.86	600.63	600.41	600.19	599.97	599.74	599.50	599.25	598.98	598.70	598.41	598.12	597.82	597.51
G	607.06	606.81	606.54	606.26	605.97	605.67	605.37	605.09	604.82	604.55	604.30	604.05	603.81	603.57	603.34	603.11	602.87	602.63	602.39	602.14	601.87	601.61	601.35	601.10	600.87	600.65	600.43	600.21	599.98	599.74	599.49	599.22	598.94	598.65	598.35	598.05	597.75
F	607.30	607.04	606.77	606.50	606.21	605.91	605.60	605.32	605.05	604.79	604.53	604.29	604.05	603.81	603.58	603.35	603.11	602.87	602.63	602.38	602.11	601.85	601.59	601.33	601.10	600.88	600.66	600.44	600.21	599.97	599.72	599.45	599.17	598.88	598.58	598.28	597.98
E	607.53	607.28	607.01	606.73	606.44	606.14	605.84	605.56	605.29	605.02	604.77	604.53	604.29	604.05	603.82	603.59	603.35	603.11	602.86	602.62	602.35	602.08	601.82	601.57	601.34	601.12	600.90	600.68	600.45	600.21	599.95	599.69	599.41	599.11	598.81	598.51	598.21
D	607.76	607.51	607.24	606.97	606.67	606.38	606.07	605.80	605.53	605.26	605.01	604.76	604.52	604.29	604.06	603.82	603.59	603.35	603.10	602.86	602.59	602.32	602.06	601.81	601.58	601.35	601.13	600.91	600.68	600.44	600.19	599.92	599.64	599.34	599.05	598.74	598.44
C	607.86	607.60	607.33	607.06	606.77	606.47	606.17	605.89	605.62	605.36	605.11	604.86	604.62	604.38	604.15	603.92	603.69	603.45	603.20	602.96	602.69	602.42	602.16	601.91	601.67	601.45	601.22	601.00	600.77	600.53	600.27	600.01	599.73	599.43	599.14	598.84	598.53
B	607.70	607.45	607.18	606.90	606.62	606.32	606.02	605.75	605.48	605.21	604.96	604.72	604.48	604.24	604.01	603.78	603.54	603.30	603.06	602.81	602.54	602.28	602.02	601.76	601.53	601.30	601.08	600.85	600.61	600.37	600.12	599.85	599.57	599.28	598.98	598.68	598.39
A	607.55	607.29	607.03	606.75	606.46	606.17	605.87	605.60	605.34	605.07	604.82	604.58	604.33	604.10	603.86	603.63	603.40	603.16	602.91	602.67	602.40	602.13	601.87	601.62	601.38	601.15	600.93	600.69	600.46	600.21	599.96	599.69	599.41	599.12	598.83	598.53	598.24

NOTE:

SEE DESIGN SHEET 181 FOR NOTES AND HAUNCH DETAIL.

NOTE:
LINE NUMBERS CORRESPOND TO THE HEXAGONAL NUMBERS SHOWN ON DESIGN SHEETS 192 -193.

whks
engineers + planners + land surveyors

DESIGN FOR VARIABLE SKEW (L.A.)

227'-6 x VARI. CONTINUOUS WELDED GIRDER BRIDGE-EBL W/14' BIKE TRAIL

138'-10 & 151'-0 7/8 END SPANS MULTIPLE LENGTH INTERIOR SPANS

BEAM LINE HAUNCH DATA-UNIT 1

STA. 6792+60.93 - 52' LEFT ℄ I-74 OCTOBER, 2015

SCOTT COUNTY

IOWA DEPARTMENT OF TRANSPORTATION - HIGHWAY DIVISION

DESIGN SHEET NO. 182 OF 282 FILE NO. 30253 DESIGN NO. 3408

BENCH MARK NO. 500: STA. 6781+18.92 LT. 161.19'
ELEV. 575.797, CHISELED "X" IN BOLT E. SIDE
CONCRETE STRUCTURE

TABLE OF BEAM LINE HAUNCH ELEVATIONS

BEAM LINE	℄ BEARING PIER 21											℄ BOLTED SPLICE 1			℄ PIER 22				℄ BOLTED SPLICE 2								℄ BOLTED SPLICE 3			℄ PIER 23
	LINE 1	LINE 2	LINE 3	LINE 4	LINE 5	LINE 6	LINE 7	LINE 8	LINE 9	LINE 10	LINE 11	LINE 12	LINE 13	LINE 14	LINE 15	LINE 16	LINE 17	LINE 18	LINE 19	LINE 20	LINE 21	LINE 22	LINE 23	LINE 24	LINE 25	LINE 26	LINE 27	LINE 28	LINE 29	LINE 30
G	597.67	597.49	597.32	597.14	596.96	596.77	596.58	596.38	596.17	595.96	595.75	595.54	595.34	595.15	594.97	594.83	594.70	594.59	594.49	594.39	594.29	594.20	594.10	594.00	593.91	593.81	593.72	593.63	593.56	593.50
F	597.90	597.73	597.56	597.39	597.22	597.03	596.83	596.63	596.42	596.20	595.99	595.77	595.56	595.37	595.18	595.04	594.92	594.80	594.70	594.61	594.51	594.42	594.32	594.22	594.12	594.02	593.92	593.84	593.76	593.70
E	598.13	597.97	597.80	597.64	597.46	597.27	597.08	596.88	596.66	596.44	596.22	596.00	595.78	595.58	595.40	595.26	595.13	595.02	594.92	594.82	594.73	594.63	594.53	594.43	594.33	594.23	594.13	594.04	593.96	593.90
D	598.37	598.20	598.04	597.87	597.70	597.51	597.31	597.11	596.89	596.67	596.44	596.22	596.00	595.80	595.62	595.47	595.35	595.23	595.13	595.03	594.94	594.84	594.74	594.64	594.54	594.43	594.33	594.24	594.17	594.10
C	598.46	598.29	598.12	597.95	597.78	597.59	597.39	597.19	596.97	596.74	596.52	596.30	596.08	595.88	595.69	595.55	595.42	595.31	595.20	595.10	595.01	594.91	594.81	594.71	594.60	594.50	594.40	594.31	594.23	594.16
B	598.31	598.14	597.96	597.79	597.60	597.41	597.22	597.01	596.79	596.57	596.35	596.13	595.91	595.71	595.53	595.39	595.26	595.14	595.03	594.93	594.83	594.73	594.63	594.53	594.42	594.32	594.22	594.13	594.05	593.98
A	598.16	597.98	597.80	597.61	597.43	597.23	597.03	596.83	596.61	596.39	596.18	595.96	595.75	595.55	595.37	595.22	595.09	594.97	594.86	594.75	594.65	594.55	594.45	594.34	594.24	594.14	594.04	593.95	593.87	593.80

TABLE OF BEAM LINE HAUNCH ELEVATIONS

BEAM LINE			℄ BOLTED SPLICE 4									℄ BOLTED SPLICE 5				℄ PIER 24			℄ BOLTED SPLICE 6											℄ BEARING PIER 25
	LINE 31	LINE 32	LINE 33	LINE 34	LINE 35	LINE 36	LINE 37	LINE 38	LINE 39	LINE 40	LINE 41	LINE 42	LINE 43	LINE 44	LINE 45	LINE 46	LINE 47	LINE 48	LINE 49	LINE 50	LINE 51	LINE 52	LINE 53	LINE 54	LINE 55	LINE 56	LINE 57	LINE 58	LINE 59
G	593.45	593.42	593.39	593.37	593.36	593.34	593.32	593.31	593.29	593.27	593.26	593.25	593.25	593.27	593.30	593.35	593.43	593.51	593.60	593.70	593.78	593.86	593.92	593.96	594.00	594.02	594.03	594.04	594.03
F	593.65	593.62	593.59	593.58	593.56	593.55	593.53	593.51	593.49	593.47	593.45	593.44	593.44	593.45	593.48	593.54	593.61	593.70	593.80	593.90	593.98	594.06	594.13	594.17	594.21	594.22	594.23	594.22	594.21
E	593.85	593.82	593.79	593.78	593.76	593.75	593.73	593.71	593.69	593.66	593.64	593.63	593.63	593.64	593.67	593.73	593.80	593.89	593.99	594.09	594.18	594.26	594.33	594.37	594.40	594.42	594.42	594.41	594.39
D	594.05	594.02	593.99	593.98	593.96	593.95	593.93	593.90	593.88	593.86	593.83	593.82	593.82	593.83	593.85	593.91	593.98	594.07	594.17	594.27	594.37	594.45	594.51	594.56	594.59	594.61	594.60	594.59	594.57
C	594.11	594.08	594.05	594.03	594.01	594.00	593.98	593.95	593.93	593.90	593.88	593.87	593.86	593.87	593.90	593.95	594.02	594.11	594.21	594.31	594.40	594.48	594.55	594.59	594.63	594.64	594.64	594.63	594.62
B	593.93	593.89	593.87	593.84	593.82	593.81	593.78	593.76	593.74	593.71	593.69	593.68	593.67	593.68	593.70	593.75	593.82	593.91	594.00	594.09	594.18	594.27	594.33	594.37	594.41	594.43	594.43	594.43	594.42
A	593.75	593.71	593.68	593.65	593.63	593.61	593.59	593.56	593.54	593.51	593.49	593.48	593.48	593.49	593.51	593.56	593.62	593.70	593.79	593.88	593.96	594.04	594.10	594.14	594.18	594.20	594.21	594.22	594.22

NOTE:
LINE NUMBERS CORRESPOND TO THE HEXAGONAL NUMBERS SHOWN ON DESIGN SHEET 194.

NOTE:

SEE DESIGN SHEET 181 FOR NOTES AND HAUNCH DETAIL.

DESIGN FOR VARIABLE SKEW (L.A.)

2271'-6 x VARI. CONTINUOUS WELDED GIRDER BRIDGE-EBL W/14' BIKE TRAIL

138'-10 & 151'-0 7/8 END SPANS MULTIPLE LENGTH INTERIOR SPANS

BEAM LINE HAUNCH DATA-UNIT 2

STA. 6792+60.93 - 52' LEFT ℄ I-74 OCTOBER, 2015

SCOTT COUNTY

IOWA DEPARTMENT OF TRANSPORTATION - HIGHWAY DIVISION

DESIGN SHEET NO. 183 OF 282 FILE NO. 30253 DESIGN NO. 3408

whks engineers + planners + land surveyors

BENCH MARK NO. 500: STA. 6781+18.92 LT. 161.19'
ELEV. 575.797, CHISELED "X" IN BOLT E. SIDE
CONCRETE STRUCTURE

TABLE OF BEAM LINE HAUNCH ELEVATIONS

BEAM LINE	℄ BEARING PIER 25										℄ BOLTED SPLICE 1				℄ PIER 26				℄ BOLTED SPLICE 2							
	LINE 1	LINE 2	LINE 3	LINE 4	LINE 5	LINE 6	LINE 7	LINE 8	LINE 9	LINE 10	LINE 11	LINE 12	LINE 13	LINE 14	LINE 15	LINE 16	LINE 17	LINE 18	LINE 19	LINE 20	LINE 21	LINE 22	LINE 23	LINE 24	LINE 25	LINE 26
G	594.05	594.15	594.25	594.34	594.43	594.50	594.56	594.61	594.65	594.68	594.71	594.74	594.77	594.80	594.84	594.91	594.97	595.05	595.13	595.21	595.30	595.38	595.45	595.51	595.56	595.61
F	594.23	594.34	594.45	594.55	594.64	594.71	594.77	594.81	594.85	594.88	594.90	594.92	594.95	594.98	595.02	595.09	595.16	595.24	595.32	595.41	595.50	595.58	595.65	595.72	595.77	595.81
E	594.41	594.53	594.64	594.74	594.83	594.91	594.97	595.01	595.05	595.07	595.09	595.11	595.13	595.17	595.20	595.27	595.34	595.42	595.50	595.60	595.69	595.78	595.85	595.92	595.97	596.01
D	594.59	594.71	594.82	594.93	595.02	595.09	595.15	595.20	595.23	595.26	595.28	595.29	595.32	595.35	595.38	595.45	595.52	595.60	595.68	595.78	595.88	595.96	596.04	596.11	596.15	596.19
C	594.63	594.75	594.86	594.96	595.05	595.13	595.19	595.23	595.27	595.29	595.31	595.33	595.35	595.39	595.42	595.49	595.56	595.64	595.72	595.82	595.91	596.00	596.07	596.14	596.19	596.23
B	594.43	594.55	594.65	594.75	594.83	594.91	594.97	595.02	595.06	595.08	595.11	595.13	595.15	595.18	595.22	595.29	595.36	595.44	595.52	595.61	595.70	595.78	595.86	595.92	595.97	596.01
A	594.23	594.34	594.44	594.53	594.61	594.68	594.74	594.79	594.83	594.86	594.89	594.92	594.95	594.98	595.02	595.09	595.15	595.23	595.31	595.40	595.48	595.56	595.63	595.70	595.75	595.79

TABLE OF BEAM LINE HAUNCH ELEVATIONS

BEAM LINE			℄ BOLTED SPLICE 3				℄ PIER 27				℄ BOLTED SPLICE 4												℄ BEARING PIER 28
	LINE 27	LINE 28	LINE 29	LINE 30	LINE 31	LINE 32	LINE 33	LINE 34	LINE 35	LINE 36	LINE 37	LINE 38	LINE 39	LINE 40	LINE 41	LINE 42	LINE 43	LINE 44	LINE 45	LINE 46	LINE 47	LINE 48	LINE 49
G	595.64	595.67	595.70	595.73	595.76	595.80	595.85	595.92	595.99	596.07	596.16	596.25	596.34	596.42	596.50	596.56	596.62	596.66	596.69	596.71	596.71	596.71	596.71
F	595.84	595.86	595.89	595.91	595.94	595.98	596.03	596.10	596.17	596.26	596.35	596.45	596.54	596.63	596.71	596.77	596.82	596.86	596.89	596.90	596.91	596.90	596.89
E	596.03	596.06	596.08	596.10	596.12	596.16	596.21	596.28	596.35	596.44	596.54	596.64	596.73	596.82	596.90	596.97	597.02	597.06	597.08	597.10	597.09	597.08	597.07
D	596.22	596.24	596.26	596.28	596.30	596.34	596.39	596.46	596.53	596.62	596.72	596.82	596.92	597.01	597.09	597.16	597.21	597.25	597.27	597.28	597.28	597.27	597.25
C	596.26	596.28	596.30	596.32	596.34	596.38	596.43	596.50	596.57	596.66	596.75	596.85	596.95	597.04	597.12	597.19	597.24	597.28	597.30	597.32	597.31	597.30	597.29
B	596.04	596.07	596.09	596.12	596.14	596.18	596.23	596.30	596.37	596.46	596.55	596.64	596.74	596.82	596.90	596.97	597.02	597.06	597.09	597.10	597.10	597.10	597.09
A	595.82	595.86	595.88	595.91	595.94	595.98	596.03	596.10	596.17	596.25	596.34	596.43	596.52	596.60	596.68	596.74	596.79	596.84	596.86	596.88	596.89	596.89	596.89

NOTE:
LINE NUMBERS CORRESPOND TO THE HEXAGONAL NUMBERS SHOWN ON DESIGN SHEET 195.

NOTE:

SEE DESIGN SHEET 181 FOR NOTES AND HAUNCH DETAIL.

DESIGN FOR VARIABLE SKEW (L.A.)

2271'-6 x VARI. CONTINUOUS WELDED GIRDER BRIDGE-EBL W/14' BIKE TRAIL

138'-10 & 151'-0 7/8 END SPANS MULTIPLE LENGTH INTERIOR SPANS

BEAM LINE HAUNCH DATA-UNIT 3

STA. 6792+60.93 - 52' LEFT ℄ I-74 OCTOBER, 2015

SCOTT COUNTY

IOWA DEPARTMENT OF TRANSPORTATION - HIGHWAY DIVISION

DESIGN SHEET NO. 184 OF 282 FILE NO. 30253 DESIGN NO. 3408

whks engineers + planners + land surveyors

BENCH MARK NO. 500: STA. 6781+18.92 LT. 161.19'
ELEV. 575.797, CHISELED "X" IN BOLT E. SIDE
CONCRETE STRUCTURE

TABLE OF BEAM LINE HAUNCH ELEVATIONS

BEAM LINE	℄ BEARING PIER 28												℄ BOLTED SPLICE 1				℄ PIER 29					℄ BOLTED SPLICE 2				
	LINE 1	LINE 2	LINE 3	LINE 4	LINE 5	LINE 6	LINE 7	LINE 8	LINE 9	LINE 10	LINE 11	LINE 12	LINE 13	LINE 14	LINE 15	LINE 16	LINE 17	LINE 18	LINE 19	LINE 20	LINE 21	LINE 22	LINE 23	LINE 24	LINE 25	LINE 26
G	596.73	596.84	596.95	597.05	597.14	597.22	597.30	597.35	597.40	597.44	597.47	597.49	597.51	597.52	597.54	597.56	597.59	597.64	597.69	597.76	597.83	597.90	597.97	598.04	598.11	598.17
F	596.91	597.02	597.14	597.24	597.33	597.42	597.49	597.55	597.60	597.63	597.66	597.68	597.69	597.71	597.72	597.74	597.77	597.82	597.87	597.94	598.01	598.08	598.16	598.23	598.30	598.36
E	597.09	597.21	597.32	597.43	597.52	597.61	597.68	597.74	597.79	597.82	597.85	597.86	597.88	597.89	597.90	597.92	597.95	598.00	598.05	598.12	598.19	598.26	598.34	598.41	598.48	598.54
D	597.27	597.39	597.50	597.61	597.71	597.79	597.87	597.92	597.97	598.00	598.03	598.04	598.06	598.07	598.08	598.10	598.13	598.18	598.23	598.30	598.37	598.44	598.52	598.60	598.66	598.72
C	597.31	597.43	597.54	597.65	597.74	597.83	597.90	597.96	598.01	598.04	598.06	598.08	598.10	598.11	598.12	598.14	598.17	598.22	598.27	598.34	598.41	598.48	598.56	598.63	598.70	598.76
B	597.11	597.22	597.33	597.44	597.53	597.62	597.69	597.75	597.80	597.83	597.85	597.88	597.89	597.90	597.92	597.94	597.97	598.02	598.07	598.14	598.20	598.28	598.35	598.43	598.49	598.55
A	596.91	597.02	597.13	597.23	597.32	597.40	597.47	597.53	597.58	597.62	597.64	597.67	597.68	597.70	597.71	597.74	597.77	597.82	597.87	597.93	598.00	598.07	598.15	598.22	598.29	598.34

TABLE OF BEAM LINE HAUNCH ELEVATIONS

BEAM LINE				℄ BOLTED SPLICE 3				℄ PIER 30				℄ BOLTED SPLICE 4								℄ BOLTED SPLICE 5					℄ PIER 31	
	LINE 27	LINE 28	LINE 29	LINE 30	LINE 31	LINE 32	LINE 33	LINE 34	LINE 35	LINE 36	LINE 37	LINE 38	LINE 39	LINE 40	LINE 41	LINE 42	LINE 43	LINE 44	LINE 45	LINE 46	LINE 47	LINE 48	LINE 49	LINE 50	LINE 51	LINE 52
G	598.22	598.26	598.30	598.33	598.36	598.39	598.44	598.49	598.56	598.64	598.73	598.83	598.95	599.06	599.19	599.30	599.42	599.54	599.66	599.78	599.90	600.03	600.16	600.31	600.47	600.65
F	598.41	598.45	598.48	598.51	598.54	598.57	598.61	598.66	598.74	598.81	598.91	599.00	599.12	599.24	599.36	599.48	599.60	599.71	599.83	599.94	600.06	600.18	600.32	600.46	600.62	600.80
E	598.59	598.63	598.66	598.69	598.72	598.75	598.79	598.84	598.91	598.99	599.08	599.17	599.29	599.41	599.53	599.65	599.77	599.88	599.99	600.11	600.22	600.34	600.47	600.62	600.77	600.95
D	598.77	598.81	598.84	598.87	598.90	598.92	598.96	599.01	599.08	599.16	599.25	599.35	599.46	599.58	599.70	599.82	599.93	600.04	600.15	600.27	600.38	600.50	600.62	600.77	600.93	601.10
C	598.81	598.85	598.88	598.91	598.94	598.96	599.00	599.05	599.12	599.19	599.28	599.37	599.49	599.61	599.73	599.84	599.95	600.06	600.17	600.28	600.39	600.51	600.64	600.78	600.94	601.11
B	598.60	598.64	598.68	598.71	598.74	598.76	598.80	598.84	598.91	598.98	599.07	599.16	599.27	599.39	599.50	599.62	599.73	599.84	599.95	600.06	600.17	600.29	600.41	600.56	600.71	600.88
A	598.40	598.44	598.47	598.51	598.53	598.56	598.60	598.64	598.70	598.78	598.86	598.95	599.06	599.17	599.28	599.39	599.50	599.61	599.72	599.83	599.94	600.06	600.19	600.33	600.48	600.65

TABLE OF BEAM LINE HAUNCH ELEVATIONS

BEAM LINE			℄ BOLTED SPLICE 6												℄ BEARING ABUT. 32
	LINE 53	LINE 54	LINE 55	LINE 56	LINE 57	LINE 58	LINE 59	LINE 60	LINE 61	LINE 62	LINE 63	LINE 64	LINE 65	LINE 66	LINE 67
G	600.83	601.03	601.23	601.49	601.75	602.01	602.27	602.52	602.77	603.01	603.24	603.47	603.70	603.91	604.12
F	600.98	601.18	601.39	601.64	601.91	602.17	602.42	602.67	602.92	603.16	603.39	603.61	603.83	604.04	604.25
E	601.13	601.33	601.54	601.79	602.06	602.32	602.57	602.82	603.07	603.30	603.53	603.75	603.97	604.18	604.38
D	601.28	601.48	601.68	601.94	602.20	602.46	602.72	602.96	603.21	603.44	603.66	603.89	604.10	604.31	604.51
C	601.29	601.49	601.69	601.95	602.20	602.46	602.71	602.96	603.20	603.43	603.65	603.88	604.09	604.30	604.50
B	601.06	601.26	601.46	601.71	601.96	602.22	602.47	602.71	602.95	603.18	603.40	603.62	603.83	604.04	604.25
A	600.83	601.02	601.22	601.47	601.72	601.97	602.22	602.46	602.70	602.92	603.15	603.37	603.58	603.79	604.00

NOTE:

SEE DESIGN SHEET 181 FOR NOTES AND HAUNCH DETAIL.

NOTE:
LINE NUMBERS CORRESPOND TO THE HEXAGONAL NUMBERS SHOWN ON DESIGN SHEET 196.

whks
engineers + planners + land surveyors

DESIGN FOR VARIABLE SKEW (L.A.)

2271'-6 x VARI. CONTINUOUS WELDED GIRDER BRIDGE-EBL W/14' BIKE TRAIL

138'-10 & 151'-0 7/8 END SPANS MULTIPLE LENGTH INTERIOR SPANS

BEAM LINE HAUNCH DATA-UNIT 4

STA. 6792+60.93 - 52' LEFT ℄ I-74 OCTOBER, 2015

SCOTT COUNTY

IOWA DEPARTMENT OF TRANSPORTATION - HIGHWAY DIVISION

DESIGN SHEET NO. 185 OF 282 FILE NO. 30253 DESIGN NO. 3408

BENCH MARK NO. 500: STA. 6781+18.92 LT. 161.19'
ELEV. 575.797, CHISELED "X" IN BOLT E. SIDE
CONCRETE STRUCTURE

MISCELLANEOUS DATA TABLE

	BEAM LINE	℄ BRG. PIER 16											℄ BOLTED SPLICE 1				℄ PIER 17					℄ BOLTED SPLICE 2							℄ BOLTED SPLICE 3			
		LINE 1	LINE 2	LINE 3	LINE 4	LINE 5	LINE 6	LINE 7	LINE 8	LINE 9	LINE 10	LINE 11	LINE 12	LINE 13	LINE 14	LINE 15	LINE 16	LINE 17	LINE 18	LINE 19	LINE 20	LINE 190	LINE 191	LINE 192	LINE 193	LINE 194	LINE 195	LINE 196	LINE 197	LINE 198	LINE 199	LINE 200
ANTIC. DEFL. DUE TO SLAB (IN.)	P	0	9/16	1 1/8	1 5/8	1 15/16	2 3/16	2 1/4	2 1/4	2 1/16	1 13/16	1 7/16	1 1/16	3/4	7/16	3/16	0	-1/16	-1/16	-1/16	1/16	1/8	3/16	1/4	5/16	5/16	1/4	3/16	1/8	1/16	0	-1/16
CROSS SLOPE ADJUSTMENTS (IN.)	P	1/8	1/8	1/8	1/8	1/8	1/8	1/8	1/8	1/8	1/8	1/8	1/8	1/8	1/8	1/8	1/8	1/8	1/8	1/8	1/8	1/8	1/8	1/8	1/8	1/8	1/8	1/8	1/8	1/8	1/8	1/8
ALLOWABLE FIELD HAUNCH INCH (IN. & FT.)	MAX. P	3 (0.25)											2 (0.167)										3 (0.25)						2 (0.167)			
	MIN. P	-3/8 (-0.031)											-3/8 (-0.031)										-3/8 (-0.031)						-3/8 (-0.031)			

	BEAM LINE	S. END GIRDER L			℄ PIER 17					℄ BOLTED SPLICE 2							℄ BOLTED SPLICE 3			
		LINE 75	LINE 76	LINE 77	LINE 78	LINE 79	LINE 80	LINE 81	LINE 82	LINE 83	LINE 84	LINE 85	LINE 86	LINE 87	LINE 88	LINE 89	LINE 90	LINE 91	LINE 92	LINE 93
ANTIC. DEFL. DUE TO SLAB (IN.)	L	1	9/16	1/4	0	-1/16	-1/16	0	1/8	3/16	5/16	7/16	7/16	7/16	7/16	5/16	3/16	1/16	0	0
CROSS SLOPE ADJUSTMENTS (IN.)	L	1/16	1/16	1/16	1/16	1/16	1/16	1/16	1/16	1/16	1/16	1/16	1/16	1/16	1/16	1/16	1/8	1/8	1/8	1/8
ALLOWABLE FIELD HAUNCH INCH (IN. & FT.)	MAX. L	2 (0.167)									3 (0.25)						2 (0.167)			
	MIN. L	-7/16 (-0.036)									-7/16 (-0.036)						-3/8 (-0.031)			

	BEAM LINE	℄ BRG. PIER 16											℄ BOLTED SPLICE 1				℄ PIER 17					℄ BOLTED SPLICE 2							℄ BOLTED SPLICE 3			
		LINE 1	LINE 2	LINE 3	LINE 4	LINE 5	LINE 6	LINE 7	LINE 8	LINE 9	LINE 10	LINE 11	LINE 12	LINE 13	LINE 14	LINE 15	LINE 16	LINE 17	LINE 18	LINE 19	LINE 20	LINE 21	LINE 22	LINE 23	LINE 24	LINE 25	LINE 26	LINE 27	LINE 28	LINE 29	LINE 30	LINE 31
ANTICIPATED DEFLECTION DUE TO SLAB (IN.)	K	0	11/16	1 3/8	1 15/16	2 3/8	2 5/8	2 3/4	2 11/16	2 1/2	2 3/16	1 3/4	1 1/4	7/8	1/2	1/4	0	-1/16	-1/16	0	1/8	1/4	7/16	1/2	5/8	9/16	1/2	3/8	1/4	1/8	0	0
	J	0	13/16	1 9/16	2 1/4	2 3/4	3 1/16	3 1/4	3 3/16	2 15/16	2 9/16	2 1/16	1 1/2	1 1/16	5/8	5/16	0	-1/16	-1/16	1/16	3/16	3/8	9/16	11/16	3/4	3/4	5/8	1/2	5/16	3/16	1/16	0
	H	0	15/16	1 13/16	2 9/16	3 1/8	3 1/2	3 11/16	3 5/8	3 3/8	2 15/16	2 3/8	1 3/4	1 1/4	3/4	3/8	0	-1/16	-1/8	1/16	3/16	3/8	5/8	13/16	7/8	7/8	13/16	5/8	7/16	1/4	1/16	0
	G	0	7/8	1 3/4	2 7/16	3	3 5/16	3 1/2	3 1/2	3 3/16	2 13/16	2 1/4	1 11/16	1 3/16	3/4	3/8	0	-1/16	-1/8	0	3/16	3/8	9/16	11/16	13/16	13/16	11/16	9/16	3/8	3/16	1/16	0
	F	0	7/8	1 11/16	2 7/16	2 15/16	3 5/16	3 7/16	3 7/16	3 3/16	2 3/4	2 1/4	1 5/8	1 3/16	11/16	5/16	0	-1/16	-1/16	0	3/16	3/8	9/16	3/4	13/16	13/16	3/4	9/16	3/8	1/4	1/16	0
	E	0	7/8	1 11/16	2 3/8	2 15/16	3 1/4	3 7/16	3 3/8	3 1/8	2 11/16	2 3/16	1 5/8	1 3/16	11/16	5/16	0	-1/16	-1/16	0	3/16	3/8	5/8	3/4	13/16	13/16	3/4	9/16	3/8	1/4	1/16	0
	D	0	7/8	1 5/8	2 5/16	2 7/8	3 3/16	3 3/8	3 5/16	3 1/16	2 11/16	2 3/16	1 5/8	1 1/8	11/16	5/16	0	-1/16	-1/16	0	3/16	3/8	5/8	3/4	13/16	13/16	3/4	9/16	7/16	1/4	1/16	0
	C	0	13/16	1 5/8	2 1/4	2 3/4	3 1/16	3 1/4	3 1/4	2 15/16	2 9/16	2 1/8	1 9/16	1 1/8	5/8	5/16	0	-1/16	-1/16	0	3/16	3/8	9/16	11/16	13/16	13/16	3/4	9/16	3/8	1/4	1/16	0
	B	0	13/16	1 1/2	2 3/16	2 5/8	2 15/16	3 1/8	3 1/16	2 13/16	2 1/2	2 1/16	1 1/2	1 1/16	5/8	5/16	0	-1/16	-1/16	0	3/16	3/8	1/2	5/8	3/4	3/4	11/16	9/16	3/8	3/16	1/16	0
	A	0	3/4	1 7/16	2 1/16	2 1/2	2 13/16	2 15/16	2 15/16	2 11/16	2 3/8	1 15/16	1 7/16	1	9/16	5/16	0	-1/16	-1/8	0	1/8	5/16	7/16	9/16	5/8	5/8	9/16	7/16	5/16	3/16	1/16	0
CROSS SLOPE ADJUSTMENTS (IN.)	K	1/8	1/8	1/8	1/8	1/8	1/8	1/8	1/8	1/8	1/8	1/8	1/8	1/8	1/8	1/8	1/8	1/8	1/8	1/8	1/8	1/8	1/8	1/8	1/8	1/8	1/8	1/8	3/16	3/16	3/16	3/16
	B-H, J	3/16	3/16	3/16	3/16	3/16	3/16	3/16	3/16	3/16	3/16	3/16	3/16	3/16	3/16	3/16	3/16	3/16	3/16	3/16	3/16	3/16	1/8	1/8	1/8	1/8	1/8	1/8	3/16	3/16	3/16	3/16
	A	3/16	3/16	3/16	3/16	3/16	3/16	3/16	3/16	3/16	3/16	3/16	3/16	3/16	3/16	3/16	3/16	3/16	3/16	3/16	3/16	3/16	3/16	3/16	3/16	3/16	3/16	3/16	3/16	3/16	3/16	3/16
ALLOWABLE FIELD HAUNCH INCH (IN. & FT.)	MAX. K	3 (0.25)											2 (0.167)										3 (0.25)						2 (0.167)			
	MAX. B-H, J	3 (0.25)											2 (0.167)										3 (0.25)						2 (0.167)			
	MAX. A	3 (0.25)											2 (0.167)										3 (0.25)						2 (0.167)			
	MIN. K	-3/8 (-0.031)											-3/8 (-0.031)										-3/8 (-0.031)						-5/16 (-0.026)			
	MIN. B-H, J	-5/16 (-0.026)											-5/16 (-0.026)										-3/8 (-0.031)						-5/16 (-0.026)			
	MIN. A	-5/16 (-0.026)											-5/16 (-0.026)										-5/16 (-0.026)						-5/16 (-0.026)			

NOTE:
LINE NUMBERS CORRESPOND TO THE HEXAGONAL NUMBERS SHOWN ON DESIGN SHEETS 192 -193.

NOTES:

SEE DESIGN SHEET 181 FOR NOTES AND HAUNCH DETAIL.

NEGATIVE DEFLECTION NUMBERS INDICATE UPWARD DEFLECTION.

whks
engineers + planners + land surveyors

DESIGN FOR VARIABLE SKEW (L.A.)

2271'-6 x VARI. CONTINUOUS WELDED GIRDER BRIDGE-EBL W/14' BIKE TRAIL

138'-10 & 151'-0 7/8 END SPANS MULTIPLE LENGTH INTERIOR SPANS

MISCELLANEOUS DATA-UNIT 1

STA. 6792+60.93 - 52' LEFT ℄ I-74 OCTOBER, 2015

SCOTT COUNTY

IOWA DEPARTMENT OF TRANSPORTATION - HIGHWAY DIVISION

DESIGN SHEET NO. 186 OF 282 FILE NO. 30253 DESIGN NO. 3408

MISCELLANEOUS DATA TABLE

	BEAM LINE		℄ PIER 18			℄ BOLTED SPLICE 4									℄ BOLTED SPLICE 5			℄ PIER 19				℄ BOLTED SPLICE 6					℄ BOLTED SPLICE 7
			LINE 201	LINE 202	LINE 203	LINE 204	LINE 205	LINE 206	LINE 207	LINE 208	LINE 209	LINE 210	LINE 211	LINE 212	LINE 213	LINE 214	LINE 215	LINE 216	LINE 217	LINE 218	LINE 219	LINE 220	LINE 221	LINE 222	LINE 223	LINE 224	LINE 225
ANTIC. DEFL. DUE TO SLAB (IN.)	P		0	3/16	3/8	11/16	15/16	1 3/16	1 7/16	1 1/2	1 1/2	1 7/16	1 1/4	1	3/4	7/16	3/16	0	0	0	0	1/8	3/16	1/4	3/16	1/8	0
CROSS SLOPE ADJUSTMENTS (IN.)	P		1/8	1/8	1/8	1/8	1/8	1/8	1/8	1/8	1/8	1/8	1/8	1/8	1/8	1/8	1/8	1/8	1/8	1/8	1/8	1/8	1/8	1/8	1/8	1/8	1/8
ALLOWABLE FIELD HAUNCH INCH (IN. & FT.)	MAX.	P	2 (0.167)				3 (0.25)								2 (0.167)								3 (0.25)				2 (0.167)
	MIN.	P	-3/8 (-0.031)				-3/8 (-0.031)								-3/8 (-0.031)								-3/8 (-0.031)				-3/8 (-0.031)

	BEAM LINE		S. END GIRDER M							℄ PIER 19				℄ BOLTED SPLICE 6					℄ BOLTED SPLICE 7
			LINE 137	LINE 138	LINE 139	LINE 140	LINE 141	LINE 142	LINE 143	LINE 144	LINE 145	LINE 146	LINE 147	LINE 148	LINE 149	LINE 150	LINE 151	LINE 152	LINE 153
ANTIC. DEFL. DUE TO SLAB (IN.)	M		1 11/16	1 9/16	1 3/8	1 1/8	13/16	1/2	1/4	0	-1/16	0	0	1/8	3/16	1/4	1/4	3/16	1/8
CROSS SLOPE ADJUSTMENTS (IN.)	M		1/8	1/8	1/8	1/8	1/8	1/8	1/8	1/8	1/8	1/8	1/8	1/8	1/16	1/16	1/16	1/16	1/16
ALLOWABLE FIELD HAUNCH INCH (IN. & FT.)	MAX.	M	2 (0.167)												3 (0.25)				2 (0.167)
	MIN.	M	-3/8 (-0.031)												-7/16 (-0.036)				-7/16 (-0.036)

	BEAM LINE		℄ PIER 18			℄ BOLTED SPLICE 4									℄ BOLTED SPLICE 5			℄ PIER 19				℄ BOLTED SPLICE 6					℄ BOLTED SPLICE 7
			LINE 94	LINE 95	LINE 96	LINE 97	LINE 98	LINE 99	LINE 100	LINE 101	LINE 102	LINE 103	LINE 104	LINE 105	LINE 106	LINE 107	LINE 108	LINE 109	LINE 110	LINE 111	LINE 112	LINE 113	LINE 114	LINE 115	LINE 116	LINE 117	LINE 118
ANTIC. DEFL. DUE TO SLAB (IN.)	L		0	3/16	1/2	13/16	1 1/8	1 7/16	1 11/16	1 3/4	1 3/4	1 5/8	1 3/8	1 1/8	3/4	1/2	1/4	0	-1/16	-1/16	0	1/16	3/16	1/4	1/4	3/16	1/16
CROSS SLOPE ADJUSTMENTS (IN.)	L		1/8	1/8	1/8	1/8	1/8	1/8	1/8	1/8	1/8	1/8	1/8	1/8	1/8	1/8	1/8	1/8	1/8	1/8	1/8	1/8	1/8	1/8	1/8	1/8	1/8
ALLOWABLE FIELD HAUNCH INCH (IN. & FT.)	MAX.	L	2 (0.167)				3 (0.25)								2 (0.167)								3 (0.25)				2 (0.167)
	MIN.	L	-3/8 (-0.031)				-3/8 (-0.031)								-3/8 (-0.031)								-3/8 (-0.031)				-3/8 (-0.031)

	BEAM LINE		℄ PIER 18			℄ BOLTED SPLICE 4									℄ BOLTED SPLICE 5			℄ PIER 19				℄ BOLTED SPLICE 6					
			LINE 32	LINE 33	LINE 34	LINE 35	LINE 36	LINE 37	LINE 38	LINE 39	LINE 40	LINE 41	LINE 42	LINE 43	LINE 44	LINE 45	LINE 46	LINE 47	LINE 48	LINE 49	LINE 50	LINE 51	LINE 52	LINE 53	LINE 54	LINE 55	LINE 56
ANTICIPATED DEFLECTION DUE TO SLAB (IN.)	K		0	1/4	9/16	7/8	1 1/4	1 9/16	1 7/8	1 15/16	1 15/16	1 13/16	1 9/16	1 1/4	7/8	9/16	1/4	0	-1/16	-1/16	0	1/16	3/16	3/16	1/4	3/16	1/8
	J		0	1/4	9/16	15/16	1 3/8	1 3/4	2 1/16	2 3/16	2 3/16	2 1/16	1 3/4	1 7/16	1	5/8	5/16	0	-1/16	-1/8	-1/16	1/16	1/8	3/16	3/16	3/16	1/8
	H		0	1/4	5/8	1	1 1/2	1 7/8	2 1/4	2 3/8	2 3/8	2 1/4	2	1 9/16	1 1/8	11/16	5/16	0	-1/8	-1/8	-1/8	0	1/16	1/8	3/16	1/8	1/16
	G		0	1/4	5/8	1	1 7/16	1 13/16	2 1/8	2 5/16	2 5/16	2 3/16	1 7/8	1 1/2	1 1/16	5/8	5/16	0	-1/8	-1/8	-1/16	0	1/16	1/8	3/16	1/8	1/16
	F		0	1/4	9/16	1	1 7/16	1 13/16	2 1/8	2 1/4	2 1/4	2 3/16	1 7/8	1 1/2	1 1/16	5/8	5/16	0	-1/16	-1/8	-1/16	0	1/8	3/16	3/16	3/16	1/8
	E		0	1/4	9/16	15/16	1 7/16	1 13/16	2 1/16	2 1/4	2 1/4	2 1/8	1 7/8	1 1/2	1 1/16	5/8	5/16	0	-1/16	-1/16	-1/16	1/16	1/8	3/16	1/4	3/16	1/8
	D		0	1/4	9/16	15/16	1 3/8	1 3/4	2 1/16	2 3/16	2 3/16	2 1/16	1 13/16	1 7/16	1	5/8	5/16	0	-1/16	-1/16	0	1/16	3/16	1/4	1/4	1/4	3/16
	C		0	1/4	9/16	15/16	1 5/16	1 11/16	2	2 1/8	2 1/8	2	1 3/4	1 3/8	1	5/8	5/16	0	-1/16	-1/16	0	1/16	3/16	1/4	1/4	1/4	3/16
	B		0	3/16	1/2	7/8	1 1/4	1 5/8	1 7/8	2	2	1 15/16	1 11/16	1 5/16	15/16	9/16	5/16	0	-1/16	-1/16	0	1/16	3/16	1/4	1/4	1/4	3/16
	A		0	3/16	1/2	7/8	1 3/16	1 1/2	1 3/4	1 7/8	1 7/8	1 3/4	1 9/16	1 1/4	7/8	9/16	1/4	0	-1/16	-1/16	0	1/16	1/8	3/16	1/4	3/16	1/8
CROSS SLOPE ADJUSTMENTS (IN.)	K		3/16	3/16	3/16	3/16	3/16	3/16	3/16	3/16	3/16	3/16	3/16	3/16	3/16	1/8	1/8	1/8	1/8	1/8	1/8	1/8	1/8	1/8	1/8	1/8	1/8
	B-H, J		3/16	3/16	3/16	3/16	3/16	3/16	3/16	3/16	3/16	3/16	3/16	3/16	3/16	1/8	1/8	1/8	1/8	1/8	1/8	1/8	1/8	1/8	1/8	1/8	1/8
	A		3/16	3/16	3/16	3/16	1/8	1/8	1/8	1/8	1/8	1/8	1/8	1/8	3/16	3/16	3/16	3/16	3/16	3/16	3/16	3/16	3/16	3/16	3/16	3/16	3/16
ALLOWABLE FIELD HAUNCH INCH (IN. & FT.)	MAX.	K	2 (0.167)				3 (0.25)								2 (0.167)								3 (0.25)				
		B-H, J	2 (0.167)				3 (0.25)								2 (0.167)								3 (0.25)				
		A	2 (0.167)				3 (0.25)								2 (0.167)								3 (0.25)				
	MIN.	K	-5/16 (-0.026)				-5/16 (-0.026)								-3/8 (-0.031)								-3/8 (-0.031)				
		B-H, J	-5/16 (-0.026)				-5/16 (-0.026)								-3/8 (-0.031)								-3/8 (-0.031)				
		A	-5/16 (-0.026)				-3/8 (-0.031)								-5/16 (-0.026)								-5/16 (-0.026)				

BENCH MARK NO. 500: STA. 6781+18.92 LT. 161.19'
ELEV. 575.797, CHISELED "X" IN BOLT E. SIDE
CONCRETE STRUCTURE

NOTE:
LINE NUMBERS CORRESPOND TO THE HEXAGONAL NUMBERS SHOWN ON DESIGN SHEETS 192 -193.

NOTES:

SEE DESIGN SHEET 181 FOR NOTES AND HAUNCH DETAIL.

NEGATIVE DEFLECTION NUMBERS INDICATE UPWARD DEFLECTION.

whks
engineers + planners + land surveyors

DESIGN FOR VARIABLE SKEW (L.A.)

227'-6 x VARI. CONTINUOUS WELDED GIRDER BRIDGE-EBL W/14' BIKE TRAIL

138'-10 & 151'-0 7/8 END SPANS MULTIPLE LENGTH INTERIOR SPANS

MISCELLANEOUS DATA-UNIT 1

STA. 6792+60.93 - 52' LEFT ℄ I-74 OCTOBER, 2015

SCOTT COUNTY

IOWA DEPARTMENT OF TRANSPORTATION - HIGHWAY DIVISION

DESIGN SHEET NO. 187 OF 282 FILE NO. 30253 DESIGN NO. 3408

MISCELLANEOUS DATA TABLE

	BEAM LINE																			
						℄ PIER 20			℄ BOLTED SPLICE 8											℄ BRG. PIER 21
			LINE 226	LINE 227	LINE 228	LINE 229	LINE 230	LINE 231	LINE 232	LINE 233	LINE 234	LINE 235	LINE 236	LINE 237	LINE 238	LINE 239	LINE 240	LINE 241	LINE 242	LINE 243
ANTIC. DEFL. DUE TO SLAB (IN.)	P		$-\frac{1}{16}$	$-\frac{1}{8}$	$-\frac{1}{16}$	$-\frac{1}{16}$	0	$\frac{1}{4}$	$\frac{9}{16}$	$\frac{15}{16}$	$1\frac{3}{8}$	$1\frac{3}{4}$	2	$2\frac{1}{8}$	$2\frac{1}{8}$	$1\frac{15}{16}$	$1\frac{9}{16}$	$1\frac{1}{8}$	$\frac{5}{8}$	0
CROSS SLOPE ADJUSTMENTS (IN.)	P		$\frac{1}{8}$	$\frac{1}{8}$	$\frac{1}{8}$	$\frac{1}{8}$	$\frac{1}{8}$	$\frac{1}{8}$	$\frac{1}{8}$	$\frac{1}{8}$	$\frac{1}{8}$	$\frac{1}{8}$	$\frac{1}{8}$	$\frac{1}{8}$	$\frac{1}{8}$	$\frac{1}{8}$	$\frac{1}{8}$	$\frac{1}{8}$	$\frac{1}{8}$	$\frac{1}{8}$
ALLOWABLE FIELD HAUNCH INCH (IN. & FT.)	MAX.	P	2 (0.167)								3 (0.25)									
	MIN.	P	$-\frac{3}{8}$ (-0.031)								$-\frac{3}{8}$ (-0.031)									

			S. END GIRDER N				℄ PIER 20			℄ BOLTED SPLICE 8										℄ BRG. PIER 21
			LINE 172	LINE 173	LINE 174	LINE 175	LINE 176	LINE 177	LINE 178	LINE 179	LINE 180	LINE 181	LINE 182	LINE 183	LINE 184	LINE 185	LINE 186	LINE 187	LINE 188	LINE 189
ANTIC. DEFL. DUE TO SLAB (IN.)	N		$\frac{1}{16}$	$-\frac{1}{16}$	$-\frac{1}{8}$	$-\frac{1}{8}$	0	$\frac{1}{4}$	$\frac{5}{8}$	1	$1\frac{7}{16}$	$1\frac{13}{16}$	$2\frac{1}{16}$	$2\frac{3}{16}$	$2\frac{3}{16}$	2	$1\frac{11}{16}$	$1\frac{3}{16}$	$\frac{5}{8}$	0
CROSS SLOPE ADJUSTMENTS (IN.)	N		$\frac{1}{16}$	$\frac{1}{16}$	$\frac{1}{16}$	$\frac{1}{16}$	$\frac{1}{16}$	$\frac{1}{16}$	$\frac{1}{16}$	$\frac{1}{8}$	$\frac{1}{8}$	$\frac{1}{8}$	$\frac{1}{8}$	$\frac{1}{8}$	$\frac{1}{8}$	$\frac{1}{8}$	$\frac{1}{8}$	$\frac{1}{8}$	$\frac{1}{8}$	$\frac{1}{8}$
ALLOWABLE FIELD HAUNCH INCH (IN. & FT.)	MAX.	N	2 (0.167)								3 (0.25)									
	MIN.	N	$-\frac{7}{16}$ (-0.036)								$-\frac{3}{8}$ (-0.031)									

							℄ PIER 20			℄ BOLTED SPLICE 8										℄ BRG. PIER 21
			LINE 154	LINE 155	LINE 156	LINE 157	LINE 158	LINE 159	LINE 160	LINE 161	LINE 162	LINE 163	LINE 164	LINE 165	LINE 166	LINE 167	LINE 168	LINE 169	LINE 170	LINE 171
ANTIC. DEFL. DUE TO SLAB (IN.)	M		0	$-\frac{1}{16}$	$-\frac{1}{8}$	$-\frac{1}{16}$	0	$\frac{5}{16}$	$\frac{5}{8}$	1	$1\frac{1}{2}$	$1\frac{7}{8}$	$2\frac{3}{16}$	$2\frac{5}{16}$	$2\frac{5}{16}$	$2\frac{1}{8}$	$1\frac{3}{4}$	$1\frac{1}{4}$	$\frac{11}{16}$	0
CROSS SLOPE ADJUSTMENTS (IN.)	M		$\frac{1}{16}$	$\frac{1}{16}$	$\frac{1}{16}$	$\frac{1}{16}$	$\frac{1}{16}$	$\frac{1}{16}$	$\frac{1}{16}$	$\frac{1}{8}$	$\frac{1}{8}$	$\frac{1}{8}$	$\frac{1}{8}$	$\frac{1}{8}$	$\frac{1}{8}$	$\frac{1}{8}$	$\frac{1}{8}$	$\frac{1}{8}$	$\frac{1}{8}$	$\frac{1}{8}$
ALLOWABLE FIELD HAUNCH INCH (IN. & FT.)	MAX.	M	2 (0.167)								3 (0.25)									
	MIN.	M	$-\frac{7}{16}$ (-0.036)								$-\frac{3}{8}$ (-0.031)									

							℄ PIER 20			℄ BOLTED SPLICE 8										℄ BRG. PIER 21
			LINE 119	LINE 120	LINE 121	LINE 122	LINE 123	LINE 124	LINE 125	LINE 126	LINE 127	LINE 128	LINE 129	LINE 130	LINE 131	LINE 132	LINE 133	LINE 134	LINE 135	LINE 136
ANTIC. DEFL. DUE TO SLAB (IN.)	L		0	$-\frac{1}{16}$	$-\frac{1}{8}$	$-\frac{1}{8}$	0	$\frac{5}{16}$	$\frac{5}{8}$	$1\frac{1}{16}$	$1\frac{9}{16}$	$1\frac{15}{16}$	$2\frac{1}{4}$	$2\frac{7}{16}$	$2\frac{7}{16}$	$2\frac{3}{16}$	$1\frac{13}{16}$	$1\frac{5}{16}$	$\frac{11}{16}$	0
CROSS SLOPE ADJUSTMENTS (IN.)	L		$\frac{1}{8}$	$\frac{1}{8}$	$\frac{1}{8}$	$\frac{1}{8}$	$\frac{1}{8}$	$\frac{1}{8}$	$\frac{1}{8}$	$\frac{1}{8}$	$\frac{1}{8}$	$\frac{1}{8}$	$\frac{1}{8}$	$\frac{1}{8}$	$\frac{1}{8}$	$\frac{1}{8}$	$\frac{1}{8}$	$\frac{1}{8}$	$\frac{1}{8}$	$\frac{1}{8}$
ALLOWABLE FIELD HAUNCH INCH (IN. & FT.)	MAX.	L	2 (0.167)								3 (0.25)									
	MIN.	L	$-\frac{3}{8}$ (-0.031)								$-\frac{3}{8}$ (-0.031)									

			℄ BOLTED SPLICE 7				℄ PIER 20			℄ BOLTED SPLICE 8										℄ BRG. PIER 21
			LINE 57	LINE 58	LINE 59	LINE 60	LINE 61	LINE 62	LINE 63	LINE 64	LINE 65	LINE 66	LINE 67	LINE 68	LINE 69	LINE 70	LINE 71	LINE 72	LINE 73	LINE 74
ANTICIPATED DEFLECTION DUE TO SLAB (IN.)	K		0	$-\frac{1}{16}$	$-\frac{1}{8}$	$-\frac{1}{8}$	0	$\frac{5}{16}$	$\frac{3}{4}$	$1\frac{3}{16}$	$1\frac{11}{16}$	$2\frac{1}{8}$	$2\frac{3}{4}$	$2\frac{1}{2}$	$2\frac{1}{2}$	$2\frac{5}{16}$	$1\frac{7}{8}$	$1\frac{3}{8}$	$\frac{3}{4}$	0
	J		0	$-\frac{1}{16}$	$-\frac{1}{8}$	$-\frac{1}{8}$	0	$\frac{5}{16}$	$\frac{3}{4}$	$1\frac{1}{4}$	$1\frac{3}{4}$	$2\frac{3}{16}$	$2\frac{7}{16}$	$2\frac{5}{8}$	$2\frac{5}{8}$	$2\frac{3}{8}$	2	$1\frac{7}{16}$	$\frac{3}{4}$	0
	H		0	$-\frac{1}{8}$	$-\frac{1}{8}$	$-\frac{1}{8}$	0	$\frac{3}{8}$	$\frac{3}{4}$	$1\frac{1}{4}$	$1\frac{13}{16}$	$2\frac{1}{4}$	$2\frac{9}{16}$	$2\frac{11}{16}$	$2\frac{11}{16}$	$2\frac{1}{2}$	$2\frac{1}{16}$	$1\frac{1}{2}$	$\frac{3}{4}$	0
	G		0	$-\frac{1}{8}$	$-\frac{1}{8}$	$-\frac{1}{8}$	0	$\frac{3}{8}$	$\frac{13}{16}$	$1\frac{5}{16}$	$1\frac{13}{16}$	$2\frac{1}{4}$	$2\frac{9}{16}$	$2\frac{3}{4}$	$2\frac{3}{4}$	$2\frac{1}{2}$	$2\frac{1}{16}$	$1\frac{1}{2}$	$\frac{3}{4}$	0
	F		0	$-\frac{1}{16}$	$-\frac{1}{8}$	$-\frac{1}{8}$	0	$\frac{5}{16}$	$\frac{3}{4}$	$1\frac{1}{4}$	$1\frac{13}{16}$	$2\frac{1}{4}$	$2\frac{9}{16}$	$2\frac{11}{16}$	$2\frac{11}{16}$	$2\frac{7}{16}$	$2\frac{1}{16}$	$1\frac{7}{16}$	$\frac{3}{4}$	0
	E		$\frac{1}{16}$	$-\frac{1}{16}$	$-\frac{1}{8}$	$-\frac{1}{8}$	0	$\frac{5}{16}$	$\frac{3}{4}$	$1\frac{1}{4}$	$1\frac{3}{4}$	$2\frac{3}{16}$	$2\frac{1}{2}$	$2\frac{5}{8}$	$2\frac{5}{8}$	$2\frac{7}{16}$	2	$1\frac{7}{16}$	$\frac{3}{4}$	0
	D		$\frac{1}{16}$	$-\frac{1}{16}$	$-\frac{1}{16}$	$-\frac{1}{16}$	0	$\frac{5}{16}$	$\frac{3}{4}$	$1\frac{3}{16}$	$1\frac{11}{16}$	$2\frac{1}{8}$	$2\frac{7}{16}$	$2\frac{9}{16}$	$2\frac{9}{16}$	$2\frac{3}{8}$	$1\frac{15}{16}$	$1\frac{3}{8}$	$\frac{3}{4}$	0
	C		$\frac{1}{16}$	0	$-\frac{1}{16}$	$-\frac{1}{16}$	0	$\frac{5}{16}$	$\frac{11}{16}$	$1\frac{1}{8}$	$1\frac{5}{8}$	2	$2\frac{5}{16}$	$2\frac{1}{2}$	$2\frac{7}{16}$	$2\frac{1}{4}$	$1\frac{7}{8}$	$1\frac{3}{8}$	$\frac{3}{4}$	0
	B		$\frac{1}{16}$	0	$-\frac{1}{16}$	$-\frac{1}{16}$	0	$\frac{1}{4}$	$\frac{11}{16}$	$1\frac{1}{16}$	$1\frac{1}{2}$	$1\frac{15}{16}$	$2\frac{3}{16}$	$2\frac{5}{16}$	$2\frac{5}{16}$	$2\frac{1}{8}$	$1\frac{3}{4}$	$1\frac{1}{4}$	$\frac{11}{16}$	0
	A		$\frac{1}{16}$	0	$-\frac{1}{16}$	$-\frac{1}{16}$	0	$\frac{1}{4}$	$\frac{5}{8}$	1	$1\frac{3}{8}$	$1\frac{3}{4}$	2	$2\frac{1}{8}$	$2\frac{1}{8}$	$1\frac{15}{16}$	$1\frac{9}{16}$	$1\frac{1}{8}$	$\frac{5}{8}$	0
CROSS SLOPE ADJUSTMENTS (IN.)	K		$\frac{3}{16}$	$\frac{3}{16}$	$\frac{3}{16}$	$\frac{3}{16}$	$\frac{3}{16}$	$\frac{3}{16}$	$\frac{3}{16}$	$\frac{3}{16}$	$\frac{1}{8}$	$\frac{1}{8}$	$\frac{1}{8}$	$\frac{1}{8}$	$\frac{1}{8}$	$\frac{1}{8}$	$\frac{1}{8}$	$\frac{1}{8}$	$\frac{1}{8}$	$\frac{1}{8}$
	B-H, J		$\frac{3}{16}$	$\frac{3}{16}$	$\frac{3}{16}$	$\frac{3}{16}$	$\frac{3}{16}$	$\frac{3}{16}$	$\frac{3}{16}$	$\frac{3}{16}$	$\frac{1}{8}$	$\frac{1}{8}$	$\frac{1}{8}$	$\frac{1}{8}$	$\frac{1}{8}$	$\frac{1}{8}$	$\frac{1}{8}$	$\frac{1}{8}$	$\frac{1}{8}$	$\frac{1}{8}$
	A		$\frac{3}{16}$	$\frac{3}{16}$	$\frac{3}{16}$	$\frac{3}{16}$	$\frac{3}{16}$	$\frac{3}{16}$	$\frac{3}{16}$	$\frac{3}{16}$	$\frac{1}{8}$	$\frac{1}{8}$	$\frac{1}{8}$	$\frac{1}{8}$	$\frac{1}{8}$	$\frac{1}{8}$	$\frac{1}{8}$	$\frac{1}{8}$	$\frac{1}{8}$	$\frac{1}{8}$
ALLOWABLE FIELD HAUNCH INCH (IN. & FT.)	MAX.	K	2 (0.167)								3 (0.25)									
		B-H, J	2 (0.167)								3 (0.25)									
		A	2 (0.167)								3 (0.25)									
	MIN.	K	$-\frac{5}{16}$ (-0.026)								$-\frac{3}{8}$ (-0.031)									
		B-H, J	$-\frac{5}{16}$ (-0.026)								$-\frac{3}{8}$ (-0.031)									
		A	$-\frac{5}{16}$ (-0.026)								$-\frac{3}{8}$ (-0.031)									

BENCH MARK NO. 500: STA. 6781+18.92 LT. 161.19'
ELEV. 575.797, CHISELED "X" IN BOLT E. SIDE
CONCRETE STRUCTURE

NOTE:
LINE NUMBERS CORRESPOND TO THE HEXAGONAL NUMBERS SHOWN ON DESIGN SHEETS 192 -193.

NOTES:

SEE DESIGN SHEET 181 FOR NOTES AND HAUNCH DETAIL.

NEGATIVE DEFLECTION NUMBERS INDICATE UPWARD DEFLECTION.

whks
engineers + planners + land surveyors

DESIGN FOR VARIABLE SKEW (L.A.)

227'-6 x VARI. CONTINUOUS WELDED GIRDER BRIDGE-EBL W/14' BIKE TRAIL

138'-10 & 151'-0 7/8 END SPANS MULTIPLE LENGTH INTERIOR SPANS

MISCELLANEOUS DATA-UNIT 1

STA. 6792+60.93 - 52' LEFT ℄ I-74 OCTOBER, 2015

SCOTT COUNTY

IOWA DEPARTMENT OF TRANSPORTATION - HIGHWAY DIVISION

DESIGN SHEET NO. 188 OF 282 FILE NO. 30253 DESIGN NO. 3408

BENCH MARK NO. 500: STA. 6781+18.92 LT. 161.19'
ELEV. 575.797, CHISELED "X" IN BOLT E. SIDE
CONCRETE STRUCTURE

MISCELLANEOUS DATA TABLE

	BEAM LINE		℄ BEARING PIER 21											℄ BOLTED SPLICE 1			℄ PIER 22				℄ BOLTED SPLICE 2									℄ BOLTED SPLICE 3			℄ PIER 23
			LINE 1	LINE 2	LINE 3	LINE 4	LINE 5	LINE 6	LINE 7	LINE 8	LINE 9	LINE 10	LINE 11	LINE 12	LINE 13	LINE 14	LINE 15	LINE 16	LINE 17	LINE 18	LINE 19	LINE 20	LINE 21	LINE 22	LINE 23	LINE 24	LINE 25	LINE 26	LINE 27	LINE 28	LINE 29	LINE 30
ANTICIPATED DEFLECTION DUE TO SLAB (IN.)	G		0	11/16	1 5/16	1 7/8	2 1/4	2 1/2	2 5/8	2 5/8	2 3/8	2 1/16	1 11/16	1 3/16	3/4	5/16	0	-1/16	0	1/8	3/8	9/16	3/4	7/8	15/16	15/16	13/16	5/8	7/16	1/4	1/8	0
	F		0	13/16	1 1/2	2 1/8	2 5/8	2 7/8	3	2 15/16	2 11/16	2 5/16	1 13/16	1 5/16	13/16	3/8	0	0	0	3/16	7/16	11/16	7/8	1	1 1/16	1 1/16	15/16	3/4	1/2	1/4	1/8	0
	E		0	7/8	1 5/8	2 5/16	2 13/16	3 1/8	3 1/4	3 3/16	2 7/8	2 7/16	1 15/16	1 3/8	13/16	3/8	0	0	1/16	3/16	7/16	11/16	15/16	1 1/8	1 3/16	1 1/8	1	13/16	9/16	5/16	1/8	0
	D		0	7/8	1 11/16	2 3/8	2 7/8	3 3/16	3 5/16	3 1/4	2 15/16	2 1/2	2	1 7/16	7/8	3/8	0	-1/16	1/16	3/16	7/16	11/16	1	1 1/8	1 3/16	1 3/16	1	13/16	9/16	5/16	1/8	0
	C		0	7/8	1 5/8	2 5/16	2 13/16	3 1/8	3 1/4	3 3/16	2 7/8	2 1/2	1 15/16	1 3/8	13/16	3/8	0	-1/16	1/16	3/16	7/16	11/16	15/16	1 1/8	1 3/16	1 1/8	1	13/16	9/16	5/16	1/8	0
	B		0	13/16	1 1/2	2 1/8	2 5/8	2 7/8	3	3	2 11/16	2 5/16	1 7/8	1 5/16	13/16	5/16	0	0	0	3/16	3/8	5/8	7/8	1	1 1/16	1 1/16	15/16	3/4	1/2	1/4	1/8	0
	A		0	11/16	1 5/16	1 7/8	2 5/16	2 1/2	2 5/8	2 5/8	2 3/8	2 1/16	1 11/16	1 3/16	3/4	5/16	0	-1/16	0	3/16	3/8	9/16	3/4	7/8	15/16	15/16	13/16	5/8	7/16	1/4	1/8	0
CROSS SLOPE ADJUSTMENTS (IN.)	A & G		3/16	3/16	3/16	3/16	3/16	3/16	3/16	3/16	3/16	3/16	3/16	3/16	3/16	3/16	3/16	3/16	3/16	3/16	3/16	3/16	3/16	3/16	3/16	3/16	3/16	3/16	3/16	3/16	3/16	3/16
	B - F		3/16	3/16	3/16	3/16	3/16	3/16	3/16	3/16	3/16	3/16	3/16	3/16	3/16	3/16	3/16	3/16	3/16	3/16	3/16	1/8	1/8	1/8	1/8	1/8	1/8	1/8	1/8	1/8	1/8	1/8
ALLOWABLE FIELD HAUNCH INCH (IN. & FT.)	MAX.	A & G	3 (0.25)											2 (0.167)								3 (0.25)							2 (0.167)			
		B - F	3 (0.25)											2 (0.167)								3 (0.25)							2 (0.167)			
	MIN.	A & G	-5/16 (-0.026)											-5/16 (-0.026)								-5/16 (-0.026)							-5/16 (-0.026)			
		B - F	-5/16 (-0.026)											-5/16 (-0.026)								-3/8 (-0.031)							-3/8 (-0.031)			

MISCELLANEOUS DATA TABLE

	BEAM LINE				℄ BOLTED SPLICE 4									℄ BOLTED SPLICE 5				℄ PIER 24			℄ BOLTED SPLICE 6											℄ BEARING PIER 25
			LINE 31	LINE 32	LINE 33	LINE 34	LINE 35	LINE 36	LINE 37	LINE 38	LINE 39	LINE 40	LINE 41	LINE 42	LINE 43	LINE 44	LINE 45	LINE 46	LINE 47	LINE 48	LINE 49	LINE 50	LINE 51	LINE 52	LINE 53	LINE 54	LINE 55	LINE 56	LINE 57	LINE 58	LINE 59
ANTICIPATED DEFLECTION DUE TO SLAB (IN.)	G		1/16	3/16	3/8	5/8	13/16	15/16	15/16	7/8	3/4	5/8	3/8	3/16	0	0	0	5/16	11/16	1 1/8	1 5/8	2 1/16	2 3/8	2 5/8	2 5/8	2 9/16	2 5/16	1 7/8	1 5/16	11/16	0
	F		1/8	1/4	7/16	11/16	7/8	1 1/16	1 1/16	1	7/8	11/16	7/16	3/16	1/16	0	0	5/16	3/4	1 1/4	1 13/16	2 5/16	2 11/16	2 15/16	3	2 7/8	2 5/8	2 1/8	1 1/2	13/16	0
	E		1/8	1/4	7/16	3/4	1	1 1/8	1 3/16	1 1/8	1	3/4	1/2	1/4	1/16	0	0	5/16	3/4	1 5/16	1 15/16	2 7/16	2 7/8	3 3/16	3 1/4	3 1/8	2 13/16	2 5/16	1 5/8	7/8	0
	D		1/8	1/4	1/2	3/4	1	1 3/16	1 3/16	1 1/8	1	3/4	1/2	1/4	1/16	0	0	5/16	13/16	1 5/16	1 15/16	2 1/2	2 15/16	3 1/4	3 5/16	3 3/16	2 15/16	2 3/8	1 11/16	7/8	0
	C		1/8	1/4	7/16	3/4	1	1 1/8	1 3/16	1 1/8	1	3/4	1/2	1/4	1/16	0	0	5/16	3/4	1 5/16	1 7/8	2 7/16	2 7/8	3 3/16	3 1/4	3 1/8	2 13/16	2 5/16	1 5/8	7/8	0
	B		1/8	1/4	7/16	11/16	15/16	1 1/16	1 1/16	1 1/16	15/16	11/16	7/16	1/4	1/16	0	0	5/16	11/16	1 3/16	1 3/4	2 1/4	2 5/8	2 15/16	3	2 7/8	2 5/8	2 1/8	1 1/2	13/16	0
	A		1/16	3/16	3/8	5/8	13/16	15/16	15/16	15/16	13/16	5/8	3/8	3/16	1/16	0	0	5/16	11/16	1 1/8	1 5/8	2	2 3/8	2 5/8	2 5/8	2 1/2	2 1/4	1 7/8	1 5/16	11/16	0
CROSS SLOPE ADJUSTMENTS (IN.)	A & G		3/16	3/16	3/16	3/16	3/16	3/16	3/16	3/16	3/16	3/16	3/16	3/16	3/16	3/16	3/16	3/16	3/16	3/16	3/16	3/16	3/16	3/16	3/16	3/16	3/16	3/16	3/16	3/16	3/16
	B - F		1/8	1/8	1/8	1/8	1/8	1/8	1/8	1/8	1/8	1/8	3/16	3/16	3/16	3/16	3/16	3/16	3/16	3/16	3/16	3/16	3/16	3/16	3/16	3/16	3/16	3/16	3/16	3/16	3/16
ALLOWABLE FIELD HAUNCH INCH (IN. & FT.)	MAX.	A & G	2 (0.167)			3 (0.25)							2 (0.167)								3 (0.25)										
		B - F	2 (0.167)			3 (0.25)							2 (0.167)								3 (0.25)										
	MIN.	A & G	-5/16 (-0.026)			-5/16 (-0.026)							-5/16 (-0.026)								-5/16 (-0.026)										
		B - F	-3/8 (-0.031)			-3/8 (-0.031)							-5/16 (-0.026)								-5/16 (-0.026)										

NOTE:
LINE NUMBERS CORRESPOND TO THE HEXAGONAL NUMBERS SHOWN ON DESIGN SHEET 194.

NOTES:

SEE DESIGN SHEET 181 FOR NOTES AND HAUNCH DETAIL.

NEGATIVE DEFLECTION NUMBERS INDICATE UPWARD DEFLECTION.

whks
engineers + planners + land surveyors

DESIGN FOR VARIABLE SKEW (L.A.)

227'-6 x VARI. CONTINUOUS WELDED GIRDER BRIDGE-EBL W/14' BIKE TRAIL

138'-10 & 151'-0 7/8 END SPANS MULTIPLE LENGTH INTERIOR SPANS

MISCELLANEOUS DATA-UNIT 2

STA. 6792+60.93 - 52' LEFT ℄ I-74 OCTOBER, 2015

SCOTT COUNTY

IOWA DEPARTMENT OF TRANSPORTATION - HIGHWAY DIVISION

DESIGN SHEET NO. 189 OF 282 FILE NO. 30253 DESIGN NO. 3408

BENCH MARK NO. 500: STA. 6781+18.92 LT. 161.19'
ELEV. 575.797, CHISELED "X" IN BOLT E. SIDE
CONCRETE STRUCTURE

MISCELLANEOUS DATA TABLE

	BEAM LINE		℄ BEARING PIER 25										℄ BOLTED SPLICE 1				℄ PIER 26				℄ BOLTED SPLICE 2							
			LINE 1	LINE 2	LINE 3	LINE 4	LINE 5	LINE 6	LINE 7	LINE 8	LINE 9	LINE 10	LINE 11	LINE 12	LINE 13	LINE 14	LINE 15	LINE 16	LINE 17	LINE 18	LINE 19	LINE 20	LINE 21	LINE 22	LINE 23	LINE 24	LINE 25	LINE 26
ANTICIPATED DEFLECTION DUE TO SLAB (IN.)	G		0	9/16	1	1 3/8	1 11/16	1 7/8	1 7/8	1 13/16	1 9/16	1 1/4	15/16	9/16	5/16	1/8	0	1/8	5/16	5/8	7/8	1 1/4	1 5/8	1 7/8	2	2 1/8	2	1 7/8
	F		0	5/8	1 3/16	1 11/16	2 1/16	2 3/16	2 3/16	2 1/16	1 13/16	1 7/16	1 1/16	11/16	3/8	3/16	0	3/16	5/16	11/16	1	1 7/16	1 13/16	2 1/8	2 5/16	2 7/16	2 5/16	2 1/8
	E		0	11/16	1 5/16	1 7/8	2 1/4	2 7/16	2 7/16	2 5/16	2	1 5/8	1 1/8	3/4	7/16	3/16	0	3/16	3/8	3/4	1 1/8	1 9/16	2	2 3/8	2 9/16	2 5/8	2 9/16	2 3/8
	D		0	3/4	1 3/8	1 7/8	2 5/16	2 1/2	2 1/2	2 3/8	2 1/8	1 11/16	1 3/16	13/16	7/16	3/16	0	3/16	3/8	3/4	1 1/8	1 5/8	2 1/16	2 7/16	2 5/8	2 3/4	2 5/8	2 7/16
	C		0	11/16	1 5/16	1 13/16	2 1/4	2 7/16	2 7/16	2 5/16	2 1/16	1 5/8	1 3/16	3/4	7/16	3/16	0	3/16	3/8	11/16	1 1/16	1 9/16	2	2 5/16	2 9/16	2 11/16	2 9/16	2 3/8
	B		0	5/8	1 3/16	1 11/16	2	2 3/16	2 1/4	2 1/8	1 7/8	1 7/16	1 1/16	11/16	3/8	1/8	0	3/16	5/16	11/16	1	1 7/16	1 13/16	2 1/8	2 3/8	2 7/16	2 3/8	2 3/16
	A		0	9/16	1 1/16	1 7/16	1 11/16	1 7/8	1 7/8	1 13/16	1 9/16	1 1/4	15/16	5/8	5/16	1/8	0	1/8	5/16	5/8	15/16	1 5/16	1 5/8	1 7/8	2 1/16	2 1/8	2 1/16	1 15/16
CROSS SLOPE ADJUSTMENTS (IN.)	A & G		3/16	3/16	3/16	3/16	3/16	3/16	3/16	3/16	3/16	3/16	3/16	3/16	3/16	3/16	3/16	3/16	3/16	3/16	3/16	3/16	3/16	3/16	3/16	3/16	3/16	3/16
	B - F		1/8	1/8	1/8	1/8	1/8	1/8	1/8	1/8	1/8	1/8	3/16	3/16	3/16	3/16	3/16	3/16	3/16	3/16	1/8	1/8	1/8	1/8	1/8	1/8	1/8	1/8
ALLOWABLE FIELD HAUNCH INCH (IN. & FT.)	MAX.	A & G	3 (0.25)										2 (0.167)									3 (0.25)						
		B - F	3 (0.25)										2 (0.167)									3 (0.25)						
	MIN.	A & G	-5/16 (-0.026)										-5/16 (-0.026)									-5/16 (-0.026)						
		B - F	-3/8 (-0.031)										-5/16 (-0.026)									-3/8 (-0.031)						

MISCELLANEOUS DATA TABLE

	BEAM LINE				℄ BOLTED SPLICE 3					℄ PIER 27				℄ BOLTED SPLICE 4												℄ BEARING PIER 28
			LINE 27	LINE 28	LINE 29	LINE 30	LINE 31	LINE 32	LINE 33	LINE 34	LINE 35	LINE 36	LINE 37	LINE 38	LINE 39	LINE 40	LINE 41	LINE 42	LINE 43	LINE 44	LINE 45	LINE 46	LINE 47	LINE 48	LINE 49
ANTICIPATED DEFLECTION DUE TO SLAB (IN.)	G		1 9/16	1 1/4	7/8	9/16	1/4	1/8	0	3/16	7/16	13/16	1 1/4	1 11/16	2 1/8	2 7/16	2 3/4	2 13/16	2 13/16	2 5/8	2 5/16	1 7/8	1 5/16	11/16	0
	F		1 13/16	1 7/16	1	5/8	1/4	1/8	0	3/16	1/2	7/8	1 3/8	1 7/8	2 3/8	2 3/4	3 1/16	3 1/8	3 1/8	2 15/16	2 9/16	2 1/8	1 1/2	3/4	0
	E		2	1 9/16	1 1/8	11/16	5/16	1/8	0	1/4	1/2	15/16	1 7/16	2	2 1/2	2 7/8	3 1/4	3 3/8	3 3/8	3 3/16	2 3/4	2 5/16	1 5/8	13/16	0
	D		2 1/16	1 5/8	1 3/16	3/4	5/16	1/8	0	3/16	1/2	15/16	1 7/16	2 1/16	2 9/16	2 15/16	3 5/16	3 7/16	3 7/16	3 1/4	2 7/8	2 5/16	1 5/8	7/8	0
	C		2	1 5/8	1 1/8	3/4	5/16	1/8	0	3/16	1/2	15/16	1 7/16	1 15/16	2 7/16	2 7/8	3 1/4	3 3/8	3 3/8	3 3/16	2 13/16	2 5/16	1 9/16	13/16	0
	B		1 7/8	1 1/2	1 1/16	11/16	5/16	1/8	0	3/16	7/16	7/8	1 5/16	1 13/16	2 5/16	2 11/16	3	3 1/8	3 1/8	2 15/16	2 9/16	2 1/8	1 1/2	3/4	0
	A		1 5/8	1 5/16	15/16	5/8	1/4	1/8	0	3/16	7/16	13/16	1 3/16	1 5/8	2 1/16	2 7/16	2 11/16	2 13/16	2 3/4	2 5/8	2 5/16	1 7/8	1 5/16	11/16	0
CROSS SLOPE ADJUSTMENTS (IN.)	A & G		3/16	3/16	3/16	3/16	3/16	3/16	3/16	3/16	3/16	3/16	3/16	3/16	3/16	3/16	3/16	3/16	3/16	3/16	3/16	3/16	3/16	3/16	3/16
	B - F		1/8	1/8	3/16	3/16	3/16	3/16	3/16	3/16	3/16	3/16	3/16	3/16	3/16	3/16	3/16	3/16	3/16	3/16	3/16	3/16	3/16	3/16	3/16
ALLOWABLE FIELD HAUNCH INCH (IN. & FT.)	MAX.	A & G	3 (0.25)		2 (0.167)									3 (0.25)											
		B - F	3 (0.25)		2 (0.167)									3 (0.25)											
	MIN.	A & G	-5/16(-0.026)		-5/16 (-0.026)									-5/16 (-0.026)											
		B - F	-3/8(-0.031)		-5/16 (-0.026)									-5/16 (-0.026)											

NOTE:
LINE NUMBERS CORRESPOND TO THE HEXAGONAL NUMBERS SHOWN ON DESIGN SHEET 195.

NOTES:

SEE DESIGN SHEET 181 FOR NOTES AND HAUNCH DETAIL.

NEGATIVE DEFLECTION NUMBERS INDICATE UPWARD DEFLECTION.

whks
engineers + planners + land surveyors

DESIGN FOR VARIABLE SKEW (L.A.)

2271'-6 x VARI. CONTINUOUS WELDED GIRDER BRIDGE-EBL W/14' BIKE TRAIL

138'-10 & 151'-0 7/8 END SPANS MULTIPLE LENGTH INTERIOR SPANS

MISCELLANEOUS DATA-UNIT 3

STA. 6792+60.93 - 52' LEFT ℄ I-74 OCTOBER, 2015

SCOTT COUNTY

IOWA DEPARTMENT OF TRANSPORTATION - HIGHWAY DIVISION

DESIGN SHEET NO. 190 OF 282 FILE NO. 30253 DESIGN NO. 3408

BENCH MARK NO. 500: STA. 6781+18.92 LT. 161.19'
ELEV. 575.797, CHISELED "X" IN BOLT E. SIDE
CONCRETE STRUCTURE

MISCELLANEOUS DATA TABLE

	BEAM LINE		℄ BEARING PIER 28												℄ BOLTED SPLICE 1				℄ PIER 29					℄ BOLTED SPLICE 2		
			LINE 1	LINE 2	LINE 3	LINE 4	LINE 5	LINE 6	LINE 7	LINE 8	LINE 9	LINE 10	LINE 11	LINE 12	LINE 13	LINE 14	LINE 15	LINE 16	LINE 17	LINE 18	LINE 19	LINE 20	LINE 21	LINE 22	LINE 23	LINE 24
ANTICIPATED DEFLECTION DUE TO SLAB (IN.)	G		0	11/16	1 1/4	1 7/8	2 1/4	2 9/16	2 13/16	2 13/16	2 11/16	2 1/2	2 1/8	1 3/4	1 1/4	7/8	1/2	1/4	0	0	1/16	1/4	7/16	11/16	15/16	1 3/16
	F		0	11/16	1 3/8	2	2 3/8	2 3/4	3	3	2 7/8	2 5/8	2 1/4	1 13/16	1 5/16	15/16	1/2	1/4	0	0	1/16	1/4	1/2	3/4	1	1 1/4
	E		0	3/4	1 7/16	2 1/16	2 9/16	2 7/8	3 1/8	3 1/8	3	2 3/4	2 3/8	1 7/8	1 3/8	1	9/16	1/4	0	0	1/16	1/4	1/2	3/4	1 1/16	1 5/16
	D		0	3/4	1 7/16	2 1/16	2 9/16	2 15/16	3 3/16	3 3/16	3 1/16	2 13/16	2 3/8	1 15/16	1 7/16	1	9/16	1/4	0	0	1/16	1/4	1/2	3/4	1 1/16	1 5/16
	C		0	3/4	1 7/16	2 1/16	2 1/2	2 7/8	3 1/8	3 1/8	3	2 3/4	2 3/8	1 15/16	1 3/8	1	9/16	1/4	0	0	1/16	1/4	1/2	3/4	1 1/16	1 5/16
	B		0	3/4	1 3/8	1 15/16	2 7/16	2 3/4	3	3	2 7/8	2 5/8	2 1/4	1 13/16	1 3/8	15/16	9/16	1/4	0	0	1/16	1/4	1/2	3/4	1	1 1/4
	A		0	11/16	1 5/16	1 13/16	2 1/4	2 9/16	2 3/4	2 13/16	2 11/16	2 1/2	2 1/8	1 3/4	1 1/4	7/8	1/2	1/4	0	0	1/16	1/4	7/16	11/16	15/16	1 3/16
CROSS SLOPE ADJUSTMENTS (IN.)	A & G		3/16	3/16	3/16	3/16	3/16	3/16	3/16	3/16	3/16	3/16	3/16	3/16	3/16	3/16	3/16	3/16	3/16	3/16	3/16	3/16	3/16	3/16	1/8	1/8
	B - F		3/16	3/16	3/16	3/16	3/16	3/16	3/16	3/16	3/16	3/16	3/16	3/16	3/16	3/16	3/16	3/16	3/16	3/16	3/16	3/16	3/16	3/16	1/8	1/8
ALLOWABLE FIELD HAUNCH INCH (IN. & FT.)	MAX.	A & G	3 (0.25)												2 (0.167)										3 (0.25)	
		B - F	3 (0.25)												2 (0.167)										3 (0.25)	
	MIN.	A & G	-5/8 (-0.026)												-5/16 (-0.026)										-3/8 (-0.031)	
		B - F	-5/16 (-0.026)												-5/16 (-0.026)										-3/8 (-0.031)	

MISCELLANEOUS DATA TABLE

	BEAM LINE							℄ BOLTED SPLICE 3				℄ PIER 30				℄ BOLTED SPLICE 4								℄ BOLTED SPLICE 5					℄ PIER 31		
			LINE 25	LINE 26	LINE 27	LINE 28	LINE 29	LINE 30	LINE 31	LINE 32	LINE 33	LINE 34	LINE 35	LINE 36	LINE 37	LINE 38	LINE 39	LINE 40	LINE 41	LINE 42	LINE 43	LINE 44	LINE 45	LINE 46	LINE 47	LINE 48	LINE 49	LINE 50	LINE 51	LINE 52	LINE 53	LINE 54
ANTICIPATED DEFLECTION DUE TO SLAB (IN.)	G		1 5/16	1 3/8	1 5/16	1 1/8	15/16	11/16	1/2	1/4	1/8	0	1/16	3/16	3/8	9/16	3/4	15/16	1 1/8	1 1/8	1 1/16	1	1 3/16	9/16	3/8	3/16	0	0	0	1/4	9/16	1
	F		1 3/8	1 7/16	1 7/16	1 1/4	1	3/4	1/2	1/4	1/8	0	1/16	3/16	3/8	9/16	7/8	1 1/16	1 1/4	1 1/4	1 1/4	1 1/16	7/8	5/8	3/8	3/16	0	0	0	1/4	9/16	1
	E		1 7/16	1 1/2	1 1/2	1 1/4	1 1/16	3/4	1/2	1/4	1/8	0	1/16	3/16	3/8	5/8	7/8	1 1/8	1 5/16	1 3/8	1 5/16	1 3/16	15/16	11/16	7/16	3/16	0	0	0	5/16	5/8	1 1/16
	D		1 1/2	1 9/16	1 1/2	1 5/16	1 1/16	3/4	1/2	1/4	1/8	0	1/16	3/16	3/8	5/8	15/16	1 1/8	1 3/8	1 3/8	1 5/16	1 3/16	15/16	11/16	7/16	3/16	0	0	0	5/16	5/8	1 1/16
	C		1 1/2	1 1/2	1 1/2	1 5/16	1 1/16	3/4	1/2	1/4	1/8	0	1/16	3/16	3/8	5/8	7/8	1 1/8	1 5/16	1 5/16	1 5/16	1 3/16	15/16	11/16	7/16	3/16	0	0	0	5/16	5/8	1 1/16
	B		1 7/16	1 7/16	1 7/16	1 1/4	1	3/4	1/2	1/4	1/8	0	1/16	3/16	3/8	9/16	13/16	1 1/16	1 3/16	1 1/4	1 3/16	1 1/16	7/8	5/8	3/8	1/8	0	0	0	5/16	5/8	1 1/16
	A		1 5/16	1 3/8	1 3/8	1 3/16	1	11/16	1/2	1/4	1/8	0	1/16	1/8	5/16	9/16	3/4	15/16	1 1/16	1 1/8	1 1/16	15/16	3/4	9/16	5/16	1/8	0	0	0	5/16	9/16	1
CROSS SLOPE ADJUSTMENTS (IN.)	A & G		1/8	1/8	1/8	1/8	1/8	3/16	3/16	3/16	3/16	3/16	3/16	3/16	3/16	3/16	3/16	3/16	3/16	3/16	3/16	3/16	3/16	3/16	3/16	3/16	3/16	3/16	3/16	3/16	3/16	3/16
	B - F		1/8	1/8	1/8	1/8	1/8	3/16	3/16	3/16	3/16	3/16	3/16	3/16	3/16	3/16	1/8	1/8	1/8	1/8	1/8	1/8	1/8	3/16	3/16	3/16	3/16	3/16	3/16	3/16	3/16	3/16
ALLOWABLE FIELD HAUNCH INCH (IN. & FT.)	MAX.	A & G	3 (0.25)					2 (0.167)									3 (0.25)							2 (0.167)								
		B - F	3 (0.25)					2 (0.167)									3 (0.25)							2 (0.167)								
	MIN.	A & G	-3/8 (-0.031)					-5/16 (-0.026)									-5/16 (-0.026)							-5/16 (-0.026)								
		B - F	-3/8 (-0.031)					-5/16 (-0.026)									-3/8 (-0.031)							-5/16 (-0.026)								

MISCELLANEOUS DATA TABLE

	BEAM LINE		℄ BOLTED SPLICE 6												℄ BEARING ABUT. 32
			LINE 55	LINE 56	LINE 57	LINE 58	LINE 59	LINE 60	LINE 61	LINE 62	LINE 63	LINE 64	LINE 65	LINE 66	LINE 67
ANTICIPATED DEFLECTION DUE TO SLAB (IN.)	G		1 3/8	1 15/16	2 3/8	2 13/16	3 1/16	3 3/16	3 3/16	2 15/16	2 5/8	2 1/8	1 1/2	3/4	0
	F		1 7/16	2	2 1/2	2 15/16	3 1/4	3 3/8	3 3/8	3 1/8	2 3/4	2 1/4	1 9/16	13/16	0
	E		1 1/2	2 1/8	2 5/8	3 1/16	3 3/8	3 1/2	3 1/2	3 1/4	2 13/16	2 5/16	1 5/8	13/16	0
	D		1 1/2	2 1/8	2 5/8	3 1/8	3 3/8	3 1/2	3 1/2	3 1/4	2 7/8	2 3/8	1 5/8	13/16	0
	C		1 1/2	2 1/8	2 5/8	3 1/16	3 3/8	3 1/2	3 1/2	3 1/4	2 7/8	2 5/16	1 5/8	13/16	0
	B		1 1/2	2 1/16	2 9/16	3	3 1/4	3 3/8	3 3/8	3 1/8	2 3/4	2 1/4	1 9/16	13/16	0
	A		1 7/16	2	2 7/16	2 7/8	3 1/8	3 1/4	3 1/4	3	2 5/8	2 3/16	1 1/2	13/16	0
CROSS SLOPE ADJUSTMENTS (IN.)	A & G		3/16	3/16	3/16	3/16	3/16	3/16	3/16	3/16	3/16	3/16	3/16	3/16	3/16
	B - F		3/16	3/16	3/16	3/16	3/16	3/16	3/16	3/16	3/16	3/16	3/16	3/16	3/16
ALLOWABLE FIELD HAUNCH INCH (IN. & FT.)	MAX.	A & G	2 (0.167)	3 (0.25)											
		B - F	2 (0.167)	3 (0.25)											
	MIN.	A & G	-5/16 (-0.026)	-5/16 (-0.026)											
		B - F	-5/16 (-0.026)	-5/16 (-0.026)											

NOTE:
LINE NUMBERS CORRESPOND TO THE HEXAGONAL NUMBERS SHOWN ON DESIGN SHEET 196.

NOTES:

SEE DESIGN SHEET 181 FOR NOTES AND HAUNCH DETAIL.

NEGATIVE DEFLECTION NUMBERS INDICATE UPWARD DEFLECTION.

whks
engineers + planners + land surveyors

DESIGN FOR VARIABLE SKEW (L.A.)

2271'-6 x VARI. CONTINUOUS WELDED GIRDER BRIDGE-EBL W/14' BIKE TRAIL

138'-10 & 151'-0 7/8 END SPANS MULTIPLE LENGTH INTERIOR SPANS

MISCELLANEOUS DATA-UNIT 4

STA. 6792+60.93 - 52' LEFT ℄ I-74 OCTOBER, 2015

SCOTT COUNTY

IOWA DEPARTMENT OF TRANSPORTATION - HIGHWAY DIVISION

DESIGN SHEET NO. 191 OF 282 FILE NO. 30253 DESIGN NO. 3408

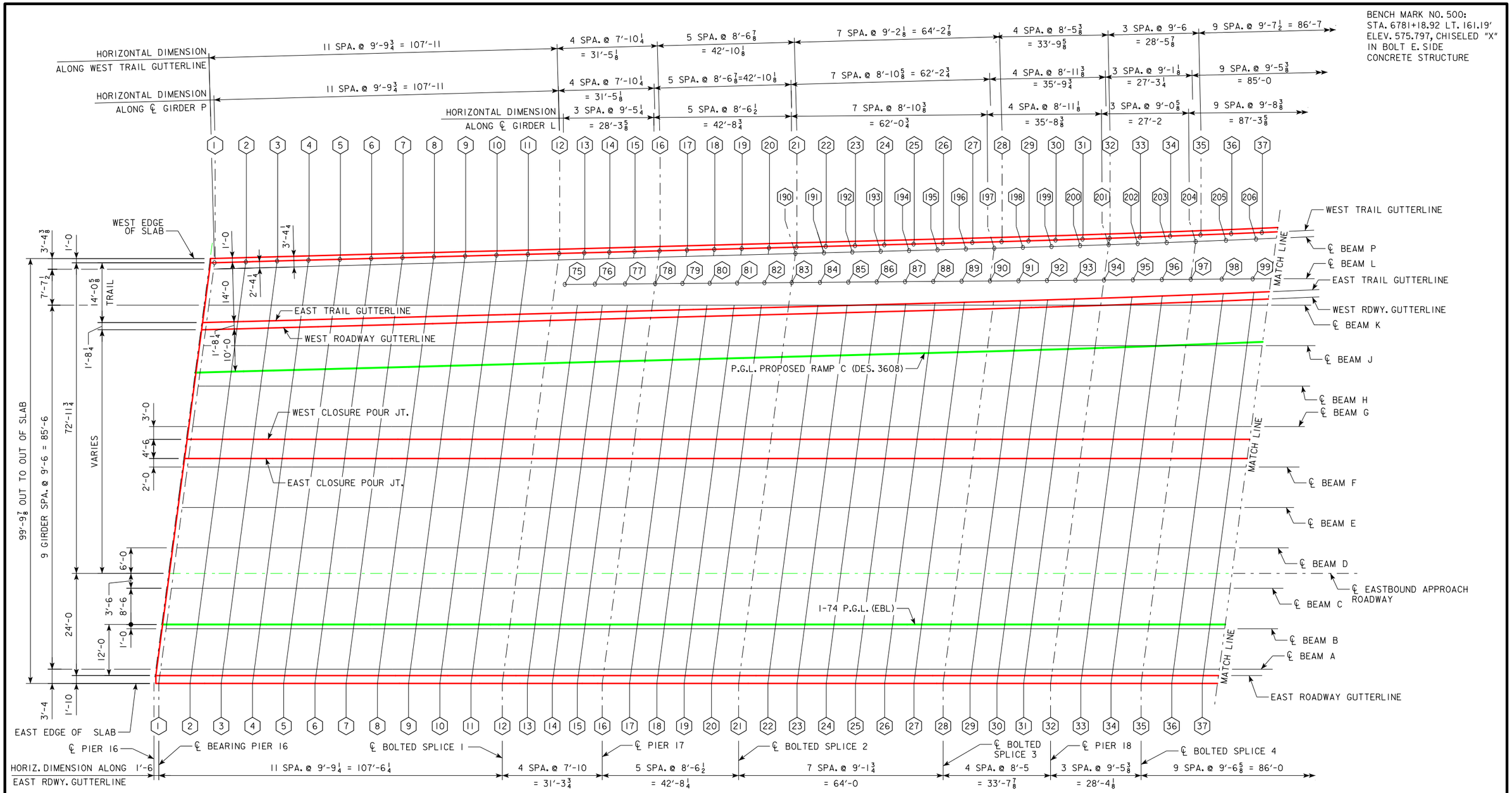

SLAB ELEVATION PLAN

whks
engineers + planners + land surveyors

DESIGN FOR VARIABLE SKEW (L.A.)

2271'-6 x VARI. CONTINUOUS WELDED GIRDER BRIDGE-EBL W/14' BIKE TRAIL

138'-10 & 151'-0 7/8 END SPANS MULTIPLE LENGTH INTERIOR SPANS

SLAB ELEVATION PLAN-UNIT 1

STA. 6792+60.93 - 52' LEFT ℄ I-74 OCTOBER, 2015

SCOTT COUNTY

IOWA DEPARTMENT OF TRANSPORTATION - HIGHWAY DIVISION

DESIGN SHEET NO. 192 OF 282 FILE NO. 30253 DESIGN NO. 3408

DESIGN TEAM MG / BB / CF	SCOTT COUNTY	PROJECT NUMBER BRFIM-074-1(200)5--05-82	SHEET NUMBER 193

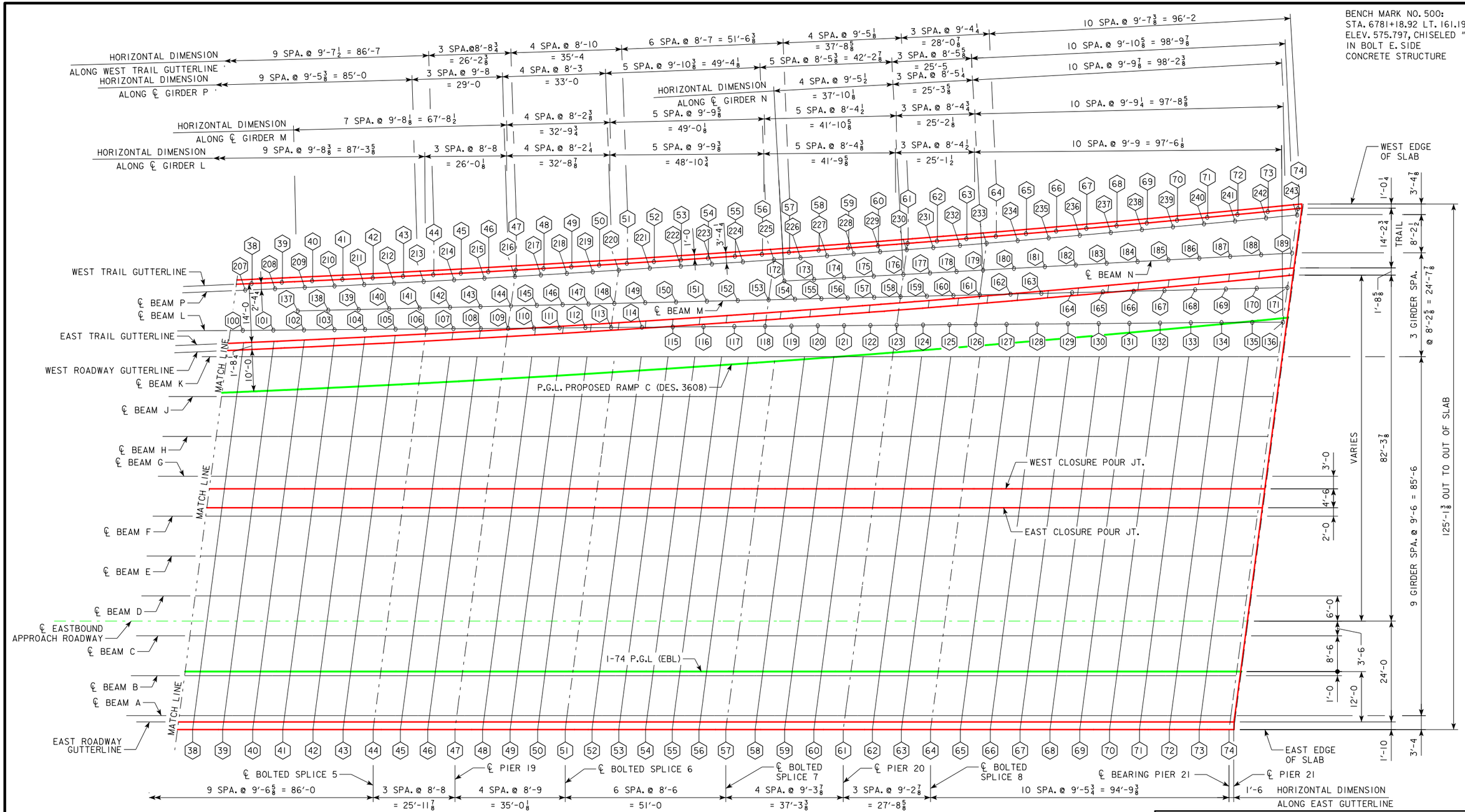

DESIGN FOR VARIABLE SKEW (L.A.)

2271'-6 x VARI. CONTINUOUS WELDED GIRDER BRIDGE-EBL W/14' BIKE TRAIL

138'-10 & 151'-0 7/8 END SPANS MULTIPLE LENGTH INTERIOR SPANS

SLAB ELEVATION PLAN-UNIT 1

STA. 6792+60.93 - 52' LEFT ℄ I-74 OCTOBER, 2015

SCOTT COUNTY

IOWA DEPARTMENT OF TRANSPORTATION - HIGHWAY DIVISION

DESIGN SHEET NO. 193 OF 282 FILE NO. 30253 DESIGN NO. 3408

SLAB ELEVATION PLAN

whks engineers + planners + land surveyors

DESIGN TEAM MG / BB / CF	SCOTT COUNTY	PROJECT NUMBER BRFIM-074-1(200)5--05-82	SHEET NUMBER 194

BENCH MARK NO. 500: STA. 6781+18.92 LT. 161.19'
ELEV. 575.797, CHISELED "X" IN BOLT E. SIDE
CONCRETE STRUCTURE

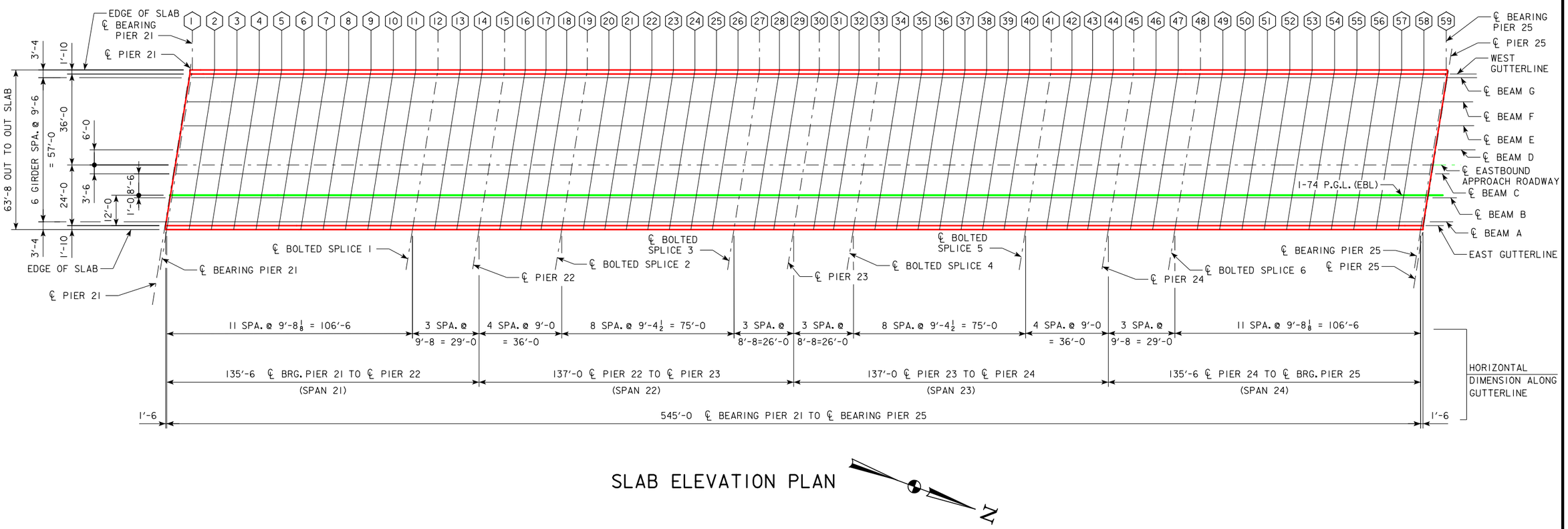

SLAB ELEVATION PLAN

N

whks
engineers + planners + land surveyors

DESIGN FOR VARIABLE SKEW (L.A.)

2271'-6 x VARI. CONTINUOUS WELDED GIRDER BRIDGE-EBL W/14' BIKE TRAIL

138'-10 & 151'-0 7/8 END SPANS MULTIPLE LENGTH INTERIOR SPANS

SLAB ELEVATION PLAN-UNIT 2

STA. 6792+60.93 - 52' LEFT ℄ I-74 OCTOBER, 2015

SCOTT COUNTY

IOWA DEPARTMENT OF TRANSPORTATION - HIGHWAY DIVISION

DESIGN SHEET NO. 194 OF 282 FILE NO. 30253 DESIGN NO. 3408

DESIGN TEAM MG / BB / CF	SCOTT COUNTY	PROJECT NUMBER BRFIM-074-1(200)5--05-82	SHEET NUMBER 195

BENCH MARK NO. 500: STA. 6781+18.92 LT. 161.19'
ELEV. 575.797, CHISELED "X" IN BOLT E. SIDE
CONCRETE STRUCTURE

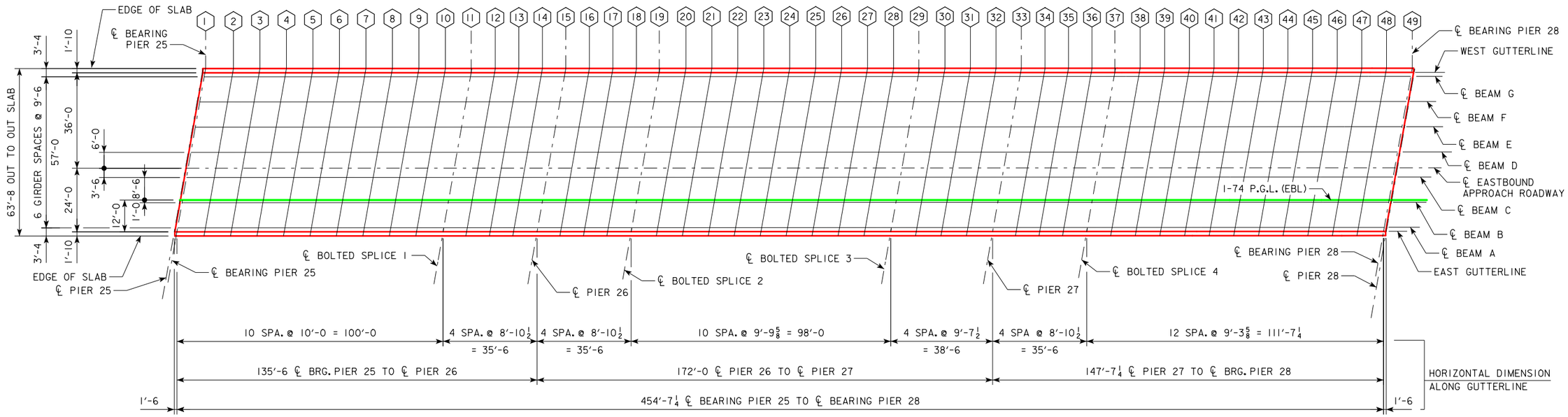

SLAB ELEVATION PLAN

N

DESIGN FOR VARIABLE SKEW (L.A.)

2271'-6 x VARI. CONTINUOUS WELDED GIRDER BRIDGE-EBL W/14' BIKE TRAIL

138'-10 & 151'-0⅞ END SPANS MULTIPLE LENGTH INTERIOR SPANS

SLAB ELEVATION PLAN-UNIT 3

STA. 6792+60.93 - 52' LEFT ℄ I-74 OCTOBER, 2015

SCOTT COUNTY

IOWA DEPARTMENT OF TRANSPORTATION - HIGHWAY DIVISION

DESIGN SHEET NO. 195 OF 282 FILE NO. 30253 DESIGN NO. 3408

whks engineers + planners + land surveyors

DESIGN TEAM MG / BB / CF	SCOTT COUNTY	PROJECT NUMBER BRFIM-074-1(200)5--05-82	SHEET NUMBER 196

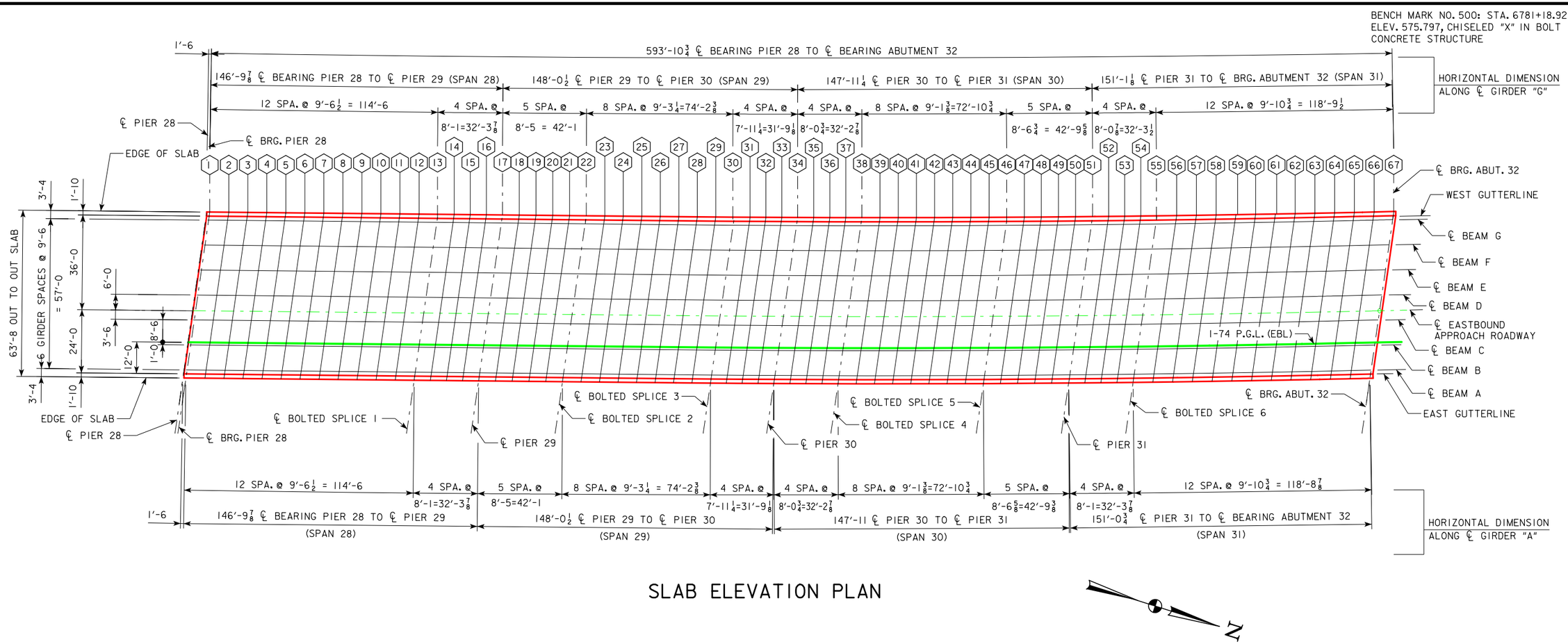

SLAB ELEVATION PLAN

DESIGN FOR VARIABLE SKEW (L.A.)

2271'-6 x VARI. CONTINUOUS WELDED GIRDER BRIDGE-EBL W/14' BIKE TRAIL

138'-10 & 151'-0⅞ END SPANS MULTIPLE LENGTH INTERIOR SPANS

SLAB ELEVATION PLAN-UNIT 4

STA. 6792+60.93 - 52' LEFT ℄ I-74 OCTOBER, 2015

SCOTT COUNTY

IOWA DEPARTMENT OF TRANSPORTATION - HIGHWAY DIVISION

DESIGN SHEET NO. 196 OF 282 FILE NO. 30253 DESIGN NO. 3408

whks engineers + planners + land surveyors

DESIGN TEAM CF / BB / MG	SCOTT COUNTY	PROJECT NUMBER BRFIM-074-1(200)5--05-82	SHEET NUMBER 197

TOP OF SLAB ELEVATIONS

LOCATION	℄ BEARING PIER 16											℄ BOLTED SPLICE 1				℄ PIER 17					℄ BOLTED SPLICE 2							℄ BOLTED SPLICE 3				℄ PIER 18			℄ BOLTED SPLICE 4		
	1	2	3	4	5	6	7	8	9	10	11	12	13	14	15	16	17	18	19	20	21	22	23	24	25	26	27	28	29	30	31	32	33	34	35	36	37
WEST TRAIL GUTTERLINE	616.07	615.79	615.52	615.24	614.96	614.68	614.40	614.12	613.84	613.57	613.29	613.01	612.79	612.56	612.34	612.12	611.87	611.63	611.39	611.14	610.90	610.64	610.38	610.12	609.86	609.60	609.34	609.08	608.84	608.60	608.35	608.11	607.84	607.57	607.30	607.03	606.75
	℄ BEARING PIER 16											℄ BOLTED SPLICE 1				℄ PIER 17					℄ BOLTED SPLICE 2							℄ BOLTED SPLICE 3				℄ PIER 18			℄ BOLTED SPLICE 4		
	1	2	3	4	5	6	7	8	9	10	11	12	13	14	15	16	17	18	19	20	190	191	192	193	194	195	196	197	198	199	200	201	202	203	204	205	206
BEAM P	616.12	615.84	615.56	615.28	615.01	614.73	614.45	614.17	613.89	613.61	613.33	613.06	612.83	612.61	612.39	612.16	611.92	611.68	611.43	611.19	610.95	610.69	610.44	610.19	609.94	609.69	609.43	609.18	608.93	608.67	608.42	608.16	607.90	607.64	607.38	607.11	606.84
BEAM N																																					
BEAM M																																					
													SOUTH END GIRDER L			℄ PIER 17					℄ BOLTED SPLICE 2							℄ BOLTED SPLICE 3				℄ PIER 18			℄ BOLTED SPLICE 4		
													75	76	77	78	79	80	81	82	83	84	85	86	87	88	89	90	91	92	93	94	95	96	97	98	99
BEAM L													613.07	612.80	612.54	612.27	612.03	611.79	611.55	611.31	611.07	610.82	610.57	610.32	610.07	609.82	609.57	609.32	609.06	608.81	608.56	608.31	608.05	607.80	607.54	607.27	606.99
	℄ BEARING PIER 16											℄ BOLTED SPLICE 1				℄ PIER 17					℄ BOLTED SPLICE 2							℄ BOLTED SPLICE 3				℄ PIER 18			℄ BOLTED SPLICE 4		
	1	2	3	4	5	6	7	8	9	10	11	12	13	14	15	16	17	18	19	20	21	22	23	24	25	26	27	28	29	30	31	32	33	34	35	36	37
BEAM K	616.27	616.00	615.72	615.45	615.17	614.90	614.62	614.35	614.08	613.80	613.53	613.25	613.03	612.81	612.59	612.37	612.13	611.89	611.65	611.41	611.17	610.91	610.66	610.40	610.15	609.89	609.63	609.38	609.14	608.91	608.67	608.44	608.17	607.91	607.64	607.37	607.11
EAST TRAIL GUTTERLINE	616.35	616.08	615.80	615.52	615.24	614.96	614.68	614.40	614.13	613.85	613.57	613.29	613.07	612.84	612.62	612.40	612.15	611.91	611.67	611.42	611.18	610.92	610.66	610.40	610.14	609.88	609.62	609.36	609.12	608.88	608.64	608.39	608.12	607.85	607.58	607.31	607.03
WEST ROADWAY GUTTERLINE	616.40	616.12	615.84	615.56	615.28	615.00	614.72	614.45	614.17	613.89	613.61	613.33	613.11	612.89	612.66	612.44	612.20	611.95	611.71	611.47	611.22	610.96	610.70	610.44	610.18	609.92	609.66	609.40	609.16	608.92	608.68	608.44	608.17	607.90	607.62	607.35	607.07
BEAM J	616.49	616.22	615.94	615.67	615.39	615.12	614.85	614.57	614.30	614.03	613.75	613.48	613.26	613.04	612.82	612.60	612.36	612.12	611.88	611.65	611.41	611.15	610.89	610.64	610.38	610.13	609.87	609.61	609.38	609.14	608.91	608.67	608.41	608.14	607.88	607.61	607.34
BEAM H	616.73	616.45	616.18	615.90	615.63	615.36	615.08	614.81	614.54	614.26	613.99	613.72	613.50	613.28	613.06	612.84	612.60	612.36	612.12	611.88	611.64	611.39	611.13	610.88	610.62	610.36	610.11	609.85	609.62	609.38	609.14	608.91	608.64	608.38	608.12	607.85	607.58
WEST CLOSURE POUR JT.	616.81	616.53	616.26	615.98	615.71	615.44	615.16	614.89	614.62	614.34	614.07	613.80	613.58	613.36	613.14	612.92	612.68	612.44	612.20	611.96	611.72	611.47	611.21	610.96	610.70	610.44	610.19	609.93	609.70	609.46	609.22	608.99	608.72	608.46	608.20	607.93	607.66
EAST CLOSURE POUR JT.	616.91	616.64	616.37	616.09	615.82	615.54	615.27	615.00	614.72	614.45	614.18	613.90	613.68	613.46	613.25	613.03	612.79	612.55	612.31	612.07	611.83	611.57	611.32	611.06	610.81	610.55	610.29	610.04	609.80	609.57	609.33	609.10	608.83	608.57	608.30	608.04	607.77
BEAM G	616.96	616.69	616.42	616.14	615.87	615.59	615.32	615.05	614.77	614.50	614.23	613.95	613.73	613.51	613.29	613.08	612.84	612.60	612.36	612.12	611.88	611.62	611.37	611.11	610.86	610.60	610.34	610.09	609.85	609.62	609.38	609.15	608.88	608.62	608.35	608.08	607.82
BEAM F	617.20	616.93	616.65	616.38	616.11	615.83	615.56	615.28	615.01	614.74	614.46	614.19	613.97	613.75	613.53	613.31	613.07	612.83	612.60	612.36	612.12	611.86	611.61	611.35	611.09	610.84	610.58	610.33	610.09	609.85	609.62	609.38	609.12	608.85	608.59	608.32	608.05
BEAM E	617.44	617.16	616.89	616.62	616.34	616.07	615.79	615.52	615.25	614.97	614.70	614.43	614.21	613.99	613.77	613.55	613.31	613.07	612.83	612.59	612.35	612.10	611.84	611.59	611.33	611.07	610.82	610.56	610.33	610.09	609.86	609.62	609.36	609.09	608.83	608.56	608.29
BEAM D	617.67	617.40	617.13	616.85	616.58	616.31	616.03	615.76	615.48	615.21	614.94	614.66	614.44	614.22	614.01	613.79	613.55	613.31	613.07	612.83	612.59	612.33	612.08	611.82	611.57	611.31	611.05	610.80	610.56	610.33	610.09	609.86	609.59	609.33	609.06	608.80	608.53
CENTERLINE APPROACH RDWY	617.79	617.52	617.25	616.97	616.70	616.43	616.15	615.88	615.60	615.33	615.06	614.78	614.56	614.35	614.13	613.91	613.67	613.43	613.19	612.95	612.71	612.46	612.20	611.94	611.69	611.43	611.18	610.92	610.68	610.45	610.21	609.98	609.71	609.45	609.18	608.92	608.65
BEAM C	617.77	617.50	617.22	616.95	616.68	616.40	616.13	615.85	615.58	615.31	615.03	614.76	614.54	614.32	614.10	613.88	613.64	613.41	613.17	612.93	612.69	612.43	612.18	611.92	611.66	611.41	611.15	610.90	610.66	610.42	610.19	609.95	609.69	609.42	609.16	608.89	608.62
BEAM B	617.63	617.35	617.08	616.81	616.53	616.26	615.99	615.71	615.44	615.16	614.89	614.62	614.40	614.18	613.96	613.74	613.50	613.26	613.02	612.78	612.54	612.29	612.03	611.78	611.52	611.26	611.01	610.75	610.52	610.28	610.05	609.81	609.55	609.28	609.02	608.75	608.48
BEAM A	617.48	617.21	616.94	616.66	616.39	616.12	615.84	615.57	615.29	615.02	614.75	614.47	614.25	614.04	613.82	613.60	613.36	613.12	612.88	612.64	612.40	612.15	611.89	611.63	611.38	611.12	610.87	610.61	610.37	610.14	609.90	609.67	609.40	609.14	608.87	608.61	608.34
EAST GUTTERLINE	617.46	617.19	616.91	616.64	616.37	616.09	615.82	615.55	615.27	615.00	614.72	614.45	614.23	614.01	613.79	613.57	613.34	613.10	612.86	612.62	612.38	612.12	611.87	611.61	611.36	611.10	610.84	610.59	610.35	610.12	609.88	609.64	609.38	609.12	608.85	608.58	608.32
EAST EDGE OF SLAB	617.64	617.36	617.09	616.82	616.54	616.27	616.00	615.72	615.45	615.17	614.90	614.63	614.41	614.19	613.97	613.75	613.51	613.27	613.03	612.79	612.56	612.30	612.04	611.79	611.53	611.28	611.02	610.76	610.53	610.29	610.06	609.82	609.56	609.29	609.03	608.76	608.49

BENCH MARK NO. 500: STA. 6781+18.92 LT. 161.19'
ELEV. 575.797, CHISELED "X" IN BOLT E. SIDE
CONCRETE STRUCTURE

NOTE:
HEXAGONAL NUMBERS
CORRESPOND TO THE
HEXAGONAL NUMBERS SHOWN
ON DESIGN SHEETS 192-193.

whks
engineers + planners + land surveyors

DESIGN FOR VARIABLE SKEW (L.A.)

2271'-6 × VARI. CONTINUOUS WELDED GIRDER BRIDGE-EBL W/14' BIKE TRAIL

138'-10 & 151'-0 7/8 END SPANS MULTIPLE LENGTH INTERIOR SPANS

SLAB ELEVATIONS-UNIT 1

STA. 6792+60.93 - 52' LEFT ℄ I-74 OCTOBER, 2015

SCOTT COUNTY

IOWA DEPARTMENT OF TRANSPORTATION - HIGHWAY DIVISION

DESIGN SHEET NO. 197 OF 282 FILE NO. 30253 DESIGN NO. 3408

DESIGN TEAM MG / BB / CF | SCOTT COUNTY | PROJECT NUMBER BRFIM-074-1(200)5--05-82 | SHEET NUMBER 198

TOP OF SLAB ELEVATIONS

LOCATION							℄ BOLTED SPLICE 5			℄ PIER 19				℄ BOLTED SPLICE 6						℄ BOLTED SPLICE 7				℄ PIER 20			℄ BOLTED SPLICE 8									℄ BEARING PIER 21
	38	39	40	41	42	43	44	45	46	47	48	49	50	51	52	53	54	55	56	57	58	59	60	61	62	63	64	65	66	67	68	69	70	71	72	73	74
WEST TRAIL GUTTERLINE	606.48	606.20	605.92	605.65	605.37	605.09	604.82	604.57	604.31	604.06	603.81	603.55	603.30	603.04	602.79	602.55	602.30	602.05	601.80	601.55	601.27	601.00	600.73	600.45	600.18	599.91	599.63	599.35	599.07	598.79	598.51	598.23	597.96	597.69	597.44	597.18	596.93
							℄ BOLTED SPLICE 5			℄ PIER 19				℄ BOLTED SPLICE 6					℄ BOLTED SPLICE 7					℄ PIER 20			℄ BOLTED SPLICE 8										℄ BEARING PIER 21
	207	208	209	210	211	212	213	214	215	216	217	218	219	220	221	222	223	224	225	226	227	228	229	230	231	232	233	234	235	236	237	238	239	240	241	242	243
BEAM P	606.57	606.30	606.03	605.76	605.49	605.22	604.95	604.67	604.39	604.11	603.87	603.63	603.40	603.16	602.87	602.59	602.30	602.01	601.73	601.48	601.24	600.99	600.75	600.50	600.25	600.01	599.76	599.47	599.18	598.89	598.60	598.32	598.04	597.76	597.50	597.23	596.98
																				SOUTH END GIRDER N				℄ PIER 20			℄ BOLTED SPLICE 8										℄ BEARING PIER 21
																				172	173	174	175	176	177	178	179	180	181	182	183	184	185	186	187	188	189
BEAM N																				601.69	601.42	601.15	600.87	600.60	600.36	600.11	599.87	599.58	599.30	599.02	598.73	598.45	598.18	597.91	597.64	597.39	597.14
			SOUTH END GIRDER M							℄ PIER 19				℄ BOLTED SPLICE 6					℄ BOLTED SPLICE 7					℄ PIER 20			℄ BOLTED SPLICE 8										℄ BEARING PIER 21
			137	138	139	140	141	142	143	144	145	146	147	148	149	150	151	152	153	154	155	156	157	158	159	160	161	162	163	164	165	166	167	168	169	170	171
BEAM M			606.16	605.88	605.61	605.33	605.06	604.78	604.51	604.23	604.00	603.77	603.53	603.30	603.02	602.74	602.46	602.18	601.90	601.66	601.42	601.18	600.94	600.71	600.47	600.23	599.99	599.71	599.43	599.15	598.88	598.60	598.33	598.07	597.81	597.56	597.32
							℄ BOLTED SPLICE 5			℄ PIER 19				℄ BOLTED SPLICE 6					℄ BOLTED SPLICE 7					℄ PIER 20			℄ BOLTED SPLICE 8										℄ BEARING PIER 21
	100	101	102	103	104	105	106	107	108	109	110	111	112	113	114	115	116	117	118	119	120	121	122	123	124	125	126	127	128	129	130	131	132	133	134	135	136
BEAM L	606.72	606.45	606.17	605.90	605.62	605.35	605.08	604.83	604.58	604.34	604.11	603.88	603.65	603.42	603.14	602.87	602.59	602.32	602.04	601.81	601.57	601.34	601.10	600.87	600.63	600.40	600.16	599.89	599.61	599.34	599.06	598.79	598.52	598.26	598.01	597.76	597.52
							℄ BOLTED SPLICE 5			℄ PIER 19				℄ BOLTED SPLICE 6						℄ BOLTED SPLICE 7				℄ PIER 20			℄ BOLTED SPLICE 8										℄ BEARING PIER 21
	38	39	40	41	42	43	44	45	46	47	48	49	50	51	52	53	54	55	56	57	58	59	60	61	62	63	64	65	66	67	68	69	70	71	72	73	74
BEAM K	606.84	606.57	606.30	606.04	605.77	605.50	605.23	604.99	604.75	604.51	604.26	604.02	603.77	603.53	603.29	603.05	602.81	602.57	602.34	602.10	601.84	601.58	601.31	601.05	600.80	600.54	600.28	600.01	599.75	599.48	599.22	598.95	598.69	598.44	598.19	597.95	597.72
EAST TRAIL GUTTERLINE	606.76	606.48	606.21	605.93	605.65	605.38	605.10	604.85	604.60	604.34	604.09	603.84	603.58	603.32	603.08	602.83	602.58	602.33	602.08	601.83	601.56	601.28	601.01	600.73	600.46	600.19	599.92	599.64	599.36	599.07	598.79	598.51	598.24	597.97	597.71	597.46	597.21
WEST ROADWAY GUTTERLINE	606.80	606.52	606.25	605.97	605.70	605.42	605.14	604.89	604.64	604.39	604.13	603.88	603.62	603.37	603.12	602.87	602.62	602.37	602.12	601.87	601.60	601.33	601.05	600.78	600.50	600.23	599.96	599.68	599.40	599.12	598.84	598.56	598.28	598.02	597.75	597.50	597.25
BEAM J	607.08	606.81	606.54	606.27	606.01	605.74	605.47	605.23	604.99	604.74	604.50	604.25	604.01	603.76	603.52	603.29	603.05	602.81	602.57	602.33	602.07	601.81	601.55	601.29	601.03	600.77	600.51	600.25	599.98	599.72	599.45	599.19	598.93	598.67	598.43	598.19	597.95
BEAM H	607.31	607.05	606.78	606.51	606.24	605.97	605.71	605.46	605.22	604.98	604.73	604.49	604.24	604.00	603.76	603.52	603.29	603.05	602.81	602.57	602.31	602.05	601.79	601.53	601.27	601.01	600.75	600.49	600.22	599.96	599.69	599.42	599.16	598.91	598.66	598.42	598.18
WEST CLOSURE POUR JT.	607.39	607.13	606.86	606.59	606.32	606.05	605.79	605.54	605.30	605.06	604.81	604.57	604.32	604.08	603.84	603.60	603.37	603.13	602.89	602.65	602.39	602.13	601.87	601.61	601.35	601.09	600.83	600.57	600.30	600.04	599.77	599.50	599.24	598.99	598.74	598.50	598.26
EAST CLOSURE POUR JT.	607.50	607.23	606.96	606.70	606.43	606.16	605.89	605.65	605.41	605.17	604.92	604.68	604.43	604.19	603.95	603.71	603.47	603.23	603.00	602.76	602.50	602.24	601.98	601.71	601.46	601.20	600.94	600.67	600.41	600.14	599.88	599.61	599.35	599.09	598.84	598.60	598.36
BEAM G	607.55	607.28	607.01	606.75	606.48	606.21	605.94	605.70	605.46	605.22	604.97	604.73	604.48	604.24	604.00	603.76	603.52	603.28	603.05	602.81	602.55	602.29	602.03	601.76	601.51	601.25	600.99	600.72	600.46	600.19	599.93	599.66	599.40	599.14	598.89	598.65	598.41
BEAM F	607.79	607.52	607.25	606.98	606.72	606.45	606.18	605.94	605.70	605.45	605.21	604.96	604.72	604.47	604.24	604.00	603.76	603.52	603.28	603.05	602.78	602.52	602.26	602.00	601.74	601.48	601.23	600.96	600.69	600.43	600.16	599.90	599.64	599.38	599.13	598.88	598.64
BEAM E	608.02	607.76	607.49	607.22	606.95	606.69	606.42	606.18	605.93	605.69	605.45	605.20	604.96	604.71	604.47	604.23	604.00	603.76	603.52	603.28	603.02	602.76	602.50	602.24	601.98	601.72	601.46	601.20	600.93	600.67	600.40	600.14	599.87	599.61	599.36	599.12	598.88
BEAM D	608.26	607.99	607.73	607.46	607.19	606.92	606.65	606.41	606.17	605.93	605.68	605.44	605.19	604.95	604.71	604.47	604.23	603.99	603.76	603.52	603.26	603.00	602.74	602.48	602.22	601.96	601.70	601.43	601.17	600.90	600.64	600.37	600.11	599.85	599.60	599.35	599.11
CENTERLINE APPROACH RDWY	608.38	608.11	607.85	607.58	607.31	607.04	606.78	606.53	606.29	606.05	605.80	605.56	605.31	605.07	604.83	604.59	604.35	604.12	603.88	603.64	603.38	603.12	602.86	602.60	602.34	602.08	601.82	601.55	601.29	601.02	600.76	600.49	600.23	599.97	599.71	599.47	599.23
BEAM C	608.36	608.09	607.82	607.55	607.29	607.02	606.75	606.51	606.27	606.02	605.78	605.53	605.29	605.04	604.81	604.57	604.33	604.09	603.85	603.62	603.36	603.09	602.83	602.57	602.31	602.05	601.80	601.53	601.27	601.00	600.73	600.47	600.20	599.94	599.69	599.44	599.20
BEAM B	608.21	607.95	607.68	607.41	607.14	606.88	606.61	606.37	606.12	605.88	605.64	605.39	605.15	604.90	604.66	604.42	604.19	603.95	603.71	603.47	603.21	602.95	602.69	602.43	602.17	601.91	601.65	601.39	601.12	600.86	600.59	600.33	600.06	599.80	599.54	599.30	599.05
BEAM A	608.07	607.80	607.54	607.27	607.00	606.73	606.47	606.22	605.98	605.74	605.49	605.25	605.00	604.76	604.52	604.28	604.04	603.81	603.57	603.33	603.07	602.81	602.55	602.29	602.03	601.77	601.51	601.24	600.98	600.71	600.45	600.18	599.92	599.66	599.40	599.15	598.90
EAST GUTTERLINE	608.05	607.78	607.51	607.25	606.98	606.71	606.44	606.20	605.96	605.72	605.47	605.23	604.98	604.74	604.50	604.26	604.02	603.78	603.55	603.31	603.05	602.79	602.52	602.26	602.00	601.75	601.49	601.22	600.96	600.69	600.43	600.16	599.89	599.63	599.38	599.13	598.88
EAST EDGE OF SLAB	608.22	607.96	607.69	607.42	607.15	606.89	606.62	606.38	606.13	605.89	605.65	605.40	605.16	604.91	604.67	604.44	604.20	603.96	603.72	603.48	603.22	602.96	602.70	602.44	602.18	601.92	601.66	601.40	601.13	600.87	600.60	600.34	600.07	599.81	599.55	599.30	599.06

BENCH MARK NO. 500: STA. 6781+18.92 LT. 161.19'
ELEV. 575.797, CHISELED "X" IN BOLT E. SIDE
CONCRETE STRUCTURE

NOTE:
HEXAGONAL NUMBERS
CORRESPOND TO THE
HEXAGONAL NUMBERS SHOWN
ON DESIGN SHEETS 192-193.

whks
engineers + planners + land surveyors

DESIGN FOR VARIABLE SKEW (L.A.)

2271'-6 x VARI. CONTINUOUS WELDED GIRDER BRIDGE-EBL W/14' BIKE TRAIL

138'-10 & 151'-0 7/8 END SPANS MULTIPLE LENGTH INTERIOR SPANS

SLAB ELEVATIONS-UNIT 1

STA. 6792+60.93 - 52' LEFT ℄ I-74 OCTOBER, 2015

SCOTT COUNTY

IOWA DEPARTMENT OF TRANSPORTATION - HIGHWAY DIVISION

DESIGN SHEET NO. 198 OF 282 FILE NO. 30253 DESIGN NO. 3408

BENCH MARK NO. 500: STA. 6781+18.92 LT. 161.19'
ELEV. 575.797, CHISELED "X" IN BOLT E. SIDE
CONCRETE STRUCTURE

TOP OF SLAB ELEVATIONS

LOCATION	℄ BEARING PIER 21											℄ BOLTED SPLICE 1			℄ PIER 22				℄ BOLTED SPLICE 2								℄ BOLTED SPLICE 3			℄ PIER 23
	1	2	3	4	5	6	7	8	9	10	11	12	13	14	15	16	17	18	19	20	21	22	23	24	25	26	27	28	29	30
WEST EDGE OF SLAB	598.46	598.23	598.00	597.78	597.56	597.35	597.15	596.96	596.77	596.58	596.41	596.24	596.07	595.91	595.76	595.63	595.50	595.37	595.25	595.14	595.02	594.92	594.82	594.72	594.64	594.55	594.48	594.41	594.35	594.30
WEST GUTTERLINE	598.30	598.07	597.84	597.62	597.40	597.19	596.99	596.80	596.61	596.42	596.24	596.07	595.91	595.75	595.60	595.46	595.33	595.21	595.09	594.97	594.86	594.75	594.65	594.56	594.47	594.39	594.31	594.25	594.19	594.13
BEAM G	598.34	598.10	597.88	597.65	597.44	597.23	597.03	596.83	596.64	596.46	596.28	596.11	595.94	595.79	595.63	595.50	595.37	595.24	595.12	595.01	594.89	594.79	594.69	594.59	594.50	594.42	594.34	594.28	594.22	594.16
BEAM F	598.57	598.33	598.11	597.88	597.67	597.46	597.25	597.05	596.86	596.68	596.50	596.33	596.16	596.00	595.85	595.71	595.58	595.46	595.34	595.22	595.10	595.00	594.89	594.80	594.71	594.63	594.55	594.48	594.42	594.36
BEAM E	598.80	598.56	598.33	598.11	597.89	597.68	597.48	597.28	597.09	596.90	596.72	596.55	596.38	596.22	596.07	595.93	595.80	595.67	595.55	595.43	595.31	595.20	595.10	595.01	594.91	594.83	594.75	594.68	594.62	594.56
BEAM D	599.03	598.80	598.56	598.34	598.12	597.91	597.70	597.50	597.31	597.12	596.94	596.77	596.60	596.44	596.28	596.14	596.01	595.88	595.76	595.64	595.52	595.41	595.31	595.21	595.12	595.03	594.95	594.89	594.82	594.76
CENTERLINE APPROACH RDWY	599.15	598.91	598.68	598.45	598.23	598.02	597.81	597.61	597.42	597.23	597.05	596.88	596.71	596.55	596.39	596.25	596.12	595.99	595.87	595.74	595.63	595.52	595.41	595.31	595.22	595.14	595.05	594.99	594.92	594.86
BEAM C	599.12	598.89	598.65	598.43	598.21	597.99	597.79	597.59	597.39	597.20	597.02	596.85	596.68	596.51	596.36	596.22	596.08	595.96	595.83	595.71	595.59	595.48	595.38	595.28	595.19	595.10	595.02	594.95	594.88	594.83
BEAM B	598.98	598.74	598.50	598.28	598.05	597.84	597.63	597.43	597.23	597.05	596.86	596.69	596.52	596.35	596.20	596.05	595.92	595.79	595.67	595.54	595.42	595.31	595.21	595.11	595.01	594.92	594.84	594.77	594.71	594.65
BEAM A	598.83	598.59	598.35	598.12	597.90	597.69	597.48	597.27	597.08	596.89	596.70	596.53	596.36	596.19	596.03	595.89	595.75	595.62	595.50	595.37	595.25	595.14	595.03	594.93	594.84	594.75	594.67	594.60	594.53	594.47
EAST GUTTERLINE	598.81	598.56	598.33	598.10	597.88	597.66	597.45	597.25	597.05	596.86	596.68	596.50	596.33	596.16	596.01	595.86	595.73	595.60	595.47	595.35	595.23	595.11	595.01	594.91	594.81	594.72	594.64	594.57	594.50	594.44
EAST EDGE OF SLAB	598.98	598.74	598.50	598.28	598.05	597.84	597.63	597.42	597.23	597.04	596.85	596.67	596.50	596.34	596.18	596.04	595.90	595.77	595.64	595.52	595.40	595.29	595.18	595.08	594.98	594.89	594.81	594.74	594.67	594.61

TOP OF SLAB ELEVATIONS

LOCATION			℄ BOLTED SPLICE 4									℄ BOLTED SPLICE 5				℄ PIER 24			℄ BOLTED SPLICE 6											℄ BEARING PIER 25
	31	32	33	34	35	36	37	38	39	40	41	42	43	44	45	46	47	48	49	50	51	52	53	54	55	56	57	58	59
WEST EDGE OF SLAB	594.25	594.20	594.16	594.12	594.09	594.07	594.05	594.03	594.03	594.02	594.03	594.04	594.05	594.07	594.10	594.14	594.18	594.22	594.28	594.33	594.39	594.45	594.50	594.56	594.61	594.67	594.73	594.78	594.84
WEST GUTTERLINE	594.08	594.04	594.00	593.96	593.93	593.90	593.88	593.87	593.86	593.86	593.86	593.87	593.89	593.91	593.93	593.97	594.01	594.05	594.11	594.16	594.22	594.28	594.33	594.39	594.45	594.50	594.56	594.62	594.67
BEAM G	594.11	594.07	594.03	593.99	593.96	593.93	593.91	593.90	593.89	593.89	593.89	593.90	593.92	593.94	593.96	594.00	594.04	594.08	594.14	594.19	594.25	594.31	594.36	594.42	594.47	594.53	594.59	594.64	594.70
BEAM F	594.31	594.27	594.22	594.19	594.15	594.13	594.11	594.09	594.08	594.08	594.08	594.09	594.10	594.12	594.15	594.18	594.22	594.26	594.32	594.37	594.43	594.49	594.54	594.60	594.66	594.71	594.77	594.82	594.88
BEAM E	594.51	594.46	594.42	594.38	594.35	594.32	594.30	594.28	594.27	594.27	594.27	594.28	594.29	594.31	594.33	594.36	594.40	594.45	594.50	594.55	594.61	594.67	594.72	594.78	594.84	594.89	594.95	595.00	595.06
BEAM D	594.71	594.66	594.62	594.58	594.54	594.52	594.49	594.47	594.46	594.46	594.46	594.47	594.48	594.49	594.52	594.55	594.58	594.63	594.68	594.73	594.79	594.85	594.90	594.96	595.02	595.07	595.13	595.19	595.24
CENTERLINE APPROACH RDWY	594.81	594.76	594.72	594.67	594.64	594.61	594.59	594.57	594.56	594.55	594.55	594.56	594.57	594.58	594.61	594.64	594.67	594.71	594.76	594.82	594.87	594.93	594.99	595.04	595.10	595.16	595.21	595.27	595.33
BEAM C	594.77	594.72	594.68	594.64	594.60	594.57	594.55	594.53	594.52	594.51	594.51	594.51	594.52	594.54	594.56	594.59	594.63	594.67	594.72	594.77	594.83	594.89	594.94	595.00	595.06	595.11	595.17	595.23	595.28
BEAM B	594.59	594.54	594.50	594.45	594.42	594.38	594.36	594.34	594.33	594.32	594.32	594.32	594.33	594.35	594.37	594.40	594.43	594.47	594.52	594.57	594.63	594.69	594.74	594.80	594.86	594.91	594.97	595.03	595.08
BEAM A	594.41	594.36	594.31	594.27	594.23	594.20	594.17	594.15	594.14	594.13	594.13	594.13	594.14	594.15	594.17	594.20	594.23	594.27	594.32	594.37	594.43	594.49	594.54	594.60	594.66	594.71	594.77	594.83	594.88
EAST GUTTERLINE	594.38	594.33	594.29	594.24	594.20	594.17	594.14	594.12	594.11	594.10	594.10	594.10	594.11	594.12	594.14	594.17	594.20	594.24	594.29	594.34	594.40	594.45	594.51	594.57	594.62	594.68	594.74	594.79	594.85
EAST EDGE OF SLAB	594.55	594.50	594.45	594.41	594.37	594.34	594.31	594.29	594.28	594.27	594.26	594.27	594.28	594.29	594.31	594.34	594.37	594.41	594.45	594.51	594.56	594.62	594.68	594.73	594.79	594.85	594.90	594.96	595.02

NOTE:
HEXAGONAL NUMBERS CORRESPOND TO THE HEXAGONAL NUMBERS SHOWN ON DESIGN SHEET 194.

whks
engineers + planners + land surveyors

DESIGN FOR VARIABLE SKEW (L.A.)

2271'-6 x VARI. CONTINUOUS WELDED GIRDER BRIDGE-EBL W/14' BIKE TRAIL

138'-10 & 151'-0 7/8 END SPANS MULTIPLE LENGTH INTERIOR SPANS

SLAB ELEVATIONS-UNIT 2

STA. 6792+60.93 - 52' LEFT ℄ I-74 OCTOBER, 2015

SCOTT COUNTY

IOWA DEPARTMENT OF TRANSPORTATION - HIGHWAY DIVISION

DESIGN SHEET NO. 199 OF 282 FILE NO. 30253 DESIGN NO. 3408

BENCH MARK NO. 500: STA. 6781+18.92 LT. 161.19'
ELEV. 575.797, CHISELED "X" IN BOLT E. SIDE
CONCRETE STRUCTURE

TOP OF SLAB ELEVATIONS

LOCATION	℄ BEARING PIER 25										℄ BOLTED SPLICE 1				℄ PIER 26				℄ BOLTED SPLICE 2						
	1	2	3	4	5	6	7	8	9	10	11	12	13	14	15	16	17	18	19	20	21	22	23	24	25
WEST EDGE OF SLAB	594.86	594.92	594.98	595.03	595.09	595.15	595.21	595.27	595.33	595.38	595.44	595.49	595.55	595.60	595.65	595.70	595.75	595.81	595.86	595.91	595.97	596.03	596.09	596.14	596.20
WEST GUTTERLINE	594.69	594.75	594.81	594.87	594.92	594.98	595.04	595.10	595.16	595.22	595.27	595.33	595.38	595.43	595.48	595.53	595.59	595.64	595.69	595.75	595.80	595.86	595.92	595.97	596.03
BEAM G	594.72	594.78	594.84	594.89	594.95	595.01	595.07	595.13	595.19	595.24	595.30	595.35	595.41	595.46	595.51	595.56	595.61	595.67	595.72	595.77	595.83	595.89	595.95	596.00	596.06
BEAM F	594.90	594.96	595.02	595.07	595.13	595.19	595.25	595.31	595.37	595.42	595.48	595.53	595.59	595.64	595.69	595.74	595.79	595.85	595.90	595.95	596.01	596.07	596.13	596.18	596.24
BEAM E	595.08	595.14	595.20	595.25	595.31	595.37	595.43	595.49	595.55	595.60	595.66	595.71	595.77	595.82	595.87	595.92	595.97	596.03	596.08	596.13	596.19	596.25	596.31	596.36	596.42
BEAM D	595.26	595.32	595.38	595.43	595.49	595.55	595.61	595.67	595.73	595.78	595.84	595.89	595.95	596.00	596.05	596.10	596.15	596.21	596.26	596.32	596.37	596.43	596.49	596.54	596.60
CENTERLINE APPROACH RDWY	595.34	595.40	595.46	595.52	595.58	595.64	595.69	595.75	595.81	595.87	595.93	595.98	596.03	596.08	596.14	596.19	596.24	596.29	596.34	596.40	596.46	596.51	596.57	596.63	596.69
BEAM C	595.30	595.36	595.42	595.47	595.53	595.59	595.65	595.71	595.77	595.82	595.88	595.94	595.99	596.04	596.09	596.14	596.19	596.25	596.30	596.36	596.41	596.47	596.53	596.58	596.64
BEAM B	595.10	595.16	595.22	595.27	595.33	595.39	595.45	595.51	595.57	595.63	595.68	595.74	595.79	595.84	595.89	595.94	595.99	596.05	596.10	596.16	596.21	596.27	596.33	596.38	596.44
BEAM A	594.90	594.96	595.02	595.07	595.13	595.19	595.25	595.31	595.37	595.43	595.48	595.54	595.59	595.64	595.69	595.74	595.79	595.85	595.90	595.96	596.01	596.07	596.13	596.18	596.24
EAST GUTTERLINE	594.87	594.93	594.99	595.04	595.10	595.16	595.22	595.28	595.34	595.39	595.45	595.50	595.56	595.61	595.66	595.71	595.76	595.82	595.87	595.92	595.98	596.04	596.10	596.15	596.21
EAST EDGE OF SLAB	595.03	595.09	595.15	595.21	595.27	595.32	595.38	595.44	595.50	595.56	595.62	595.67	595.72	595.77	595.82	595.88	595.93	595.98	596.03	596.09	596.15	596.20	596.26	596.32	596.38

TOP OF SLAB ELEVATIONS

LOCATION				℄ BOLTED SPLICE 3				℄ PIER 27				℄ BOLTED SPLICE 4												℄ BEARING PIER 28
	26	27	28	29	30	31	32	33	34	35	36	37	38	39	40	41	42	43	44	45	46	47	48	49
WEST EDGE OF SLAB	596.26	596.32	596.37	596.43	596.49	596.54	596.60	596.65	596.71	596.76	596.81	596.86	596.92	596.97	597.03	597.08	597.14	597.19	597.25	597.30	597.35	597.41	597.46	597.52
WEST GUTTERLINE	596.09	596.15	596.20	596.26	596.32	596.37	596.43	596.49	596.54	596.59	596.64	596.69	596.75	596.80	596.86	596.91	596.97	597.02	597.08	597.13	597.19	597.24	597.30	597.35
BEAM G	596.12	596.17	596.23	596.29	596.35	596.40	596.46	596.51	596.57	596.62	596.67	596.72	596.78	596.83	596.89	596.94	597.00	597.05	597.10	597.16	597.21	597.27	597.32	597.38
BEAM F	596.30	596.36	596.41	596.47	596.53	596.58	596.64	596.69	596.75	596.80	596.85	596.90	596.96	597.01	597.07	597.12	597.18	597.23	597.28	597.34	597.39	597.45	597.50	597.56
BEAM E	596.48	596.54	596.59	596.65	596.71	596.76	596.82	596.87	596.93	596.98	597.03	597.08	597.14	597.19	597.25	597.30	597.36	597.41	597.46	597.52	597.57	597.63	597.68	597.74
BEAM D	596.66	596.72	596.77	596.83	596.89	596.94	597.00	597.05	597.11	597.16	597.21	597.26	597.32	597.37	597.43	597.48	597.54	597.59	597.64	597.70	597.75	597.81	597.86	597.92
CENTERLINE APPROACH RDWY	596.74	596.80	596.86	596.92	596.97	597.03	597.08	597.14	597.19	597.24	597.30	597.35	597.40	597.46	597.51	597.57	597.62	597.67	597.73	597.78	597.84	597.89	597.95	598.00
BEAM C	596.70	596.76	596.81	596.87	596.93	596.98	597.04	597.10	597.15	597.20	597.25	597.30	597.36	597.41	597.47	597.52	597.58	597.63	597.68	597.74	597.79	597.85	597.90	597.96
BEAM B	596.50	596.56	596.61	596.67	596.73	596.78	596.84	596.90	596.95	597.00	597.05	597.10	597.16	597.21	597.27	597.32	597.38	597.43	597.48	597.54	597.59	597.65	597.70	597.76
BEAM A	596.30	596.36	596.41	596.47	596.53	596.58	596.64	596.70	596.75	596.80	596.85	596.90	596.96	597.01	597.07	597.12	597.18	597.23	597.28	597.34	597.39	597.45	597.50	597.56
EAST GUTTERLINE	596.27	596.32	596.38	596.44	596.50	596.55	596.61	596.66	596.72	596.77	596.82	596.87	596.93	596.98	597.03	597.09	597.14	597.20	597.25	597.31	597.36	597.42	597.47	597.52
EAST EDGE OF SLAB	596.43	596.49	596.55	596.60	596.66	596.72	596.77	596.83	596.88	596.93	596.98	597.04	597.09	597.15	597.20	597.25	597.31	597.36	597.42	597.47	597.53	597.58	597.63	597.69

NOTE:
HEXAGONAL NUMBERS CORRESPOND TO THE HEXAGONAL NUMBERS SHOWN ON DESIGN SHEET 195.

whks
engineers + planners + land surveyors

DESIGN FOR VARIABLE SKEW (L.A.)

2271'-6 x VARI. CONTINUOUS WELDED GIRDER BRIDGE-EBL W/14' BIKE TRAIL

138'-10 & 151'-0 7/8 END SPANS MULTIPLE LENGTH INTERIOR SPANS

SLAB ELEVATIONS-UNIT 3

STA. 6792+60.93 - 52' LEFT ℄ I-74 OCTOBER, 2015

SCOTT COUNTY

IOWA DEPARTMENT OF TRANSPORTATION - HIGHWAY DIVISION

DESIGN SHEET NO. 200 OF 282 FILE NO. 30253 DESIGN NO. 3408

BENCH MARK NO. 500: STA. 6781+18.92 LT. 161.19'
ELEV. 575.797, CHISELED "X" IN BOLT E. SIDE
CONCRETE STRUCTURE

TOP OF SLAB ELEVATIONS

LOCATION	℄ BEARING PIER 28												℄ BOLTED SPLICE 1				℄ PIER 29					℄ BOLTED SPLICE 2								℄ BOLTED SPLICE 3				℄ PIER 30
	1	2	3	4	5	6	7	8	9	10	11	12	13	14	15	16	17	18	19	20	21	22	23	24	25	26	27	28	29	30	31	32	33	34
WEST EDGE OF SLAB	597.54	597.59	597.65	597.70	597.76	597.82	597.87	597.93	597.98	598.04	598.10	598.15	598.21	598.26	598.30	598.35	598.40	598.45	598.50	598.55	598.60	598.65	598.70	598.76	598.81	598.86	598.92	598.97	599.03	599.08	599.13	599.18	599.24	599.30
WEST GUTTERLINE	597.37	597.42	597.48	597.54	597.59	597.65	597.70	597.76	597.82	597.87	597.93	597.98	598.04	598.09	598.14	598.18	598.23	598.28	598.33	598.38	598.43	598.48	598.53	598.59	598.64	598.70	598.75	598.80	598.86	598.91	598.96	599.01	599.07	599.13
BEAM G	597.40	597.45	597.51	597.56	597.62	597.68	597.73	597.79	597.84	597.90	597.96	598.01	598.07	598.12	598.16	598.21	598.26	598.31	598.36	598.41	598.46	598.51	598.56	598.61	598.67	598.72	598.78	598.83	598.89	598.94	598.98	599.04	599.09	599.15
BEAM F	597.58	597.63	597.69	597.74	597.80	597.86	597.91	597.97	598.02	598.08	598.14	598.19	598.25	598.30	598.34	598.39	598.44	598.49	598.54	598.59	598.63	598.68	598.74	598.79	598.85	598.90	598.96	599.01	599.07	599.12	599.16	599.21	599.27	599.33
BEAM E	597.76	597.81	597.87	597.92	597.98	598.03	598.09	598.15	598.20	598.26	598.31	598.37	598.43	598.47	598.52	598.57	598.62	598.67	598.72	598.76	598.81	598.86	598.92	598.97	599.03	599.08	599.14	599.19	599.24	599.30	599.34	599.39	599.44	599.50
BEAM D	597.93	597.99	598.05	598.10	598.16	598.21	598.27	598.33	598.38	598.44	598.49	598.55	598.61	598.65	598.70	598.75	598.80	598.84	598.89	598.94	598.99	599.04	599.10	599.15	599.21	599.26	599.31	599.37	599.42	599.48	599.52	599.57	599.62	599.68
CENTERLINE APPROACH RDWY	598.02	598.08	598.13	598.19	598.24	598.30	598.35	598.41	598.47	598.52	598.58	598.63	598.69	598.74	598.79	598.83	598.88	598.93	598.98	599.03	599.08	599.13	599.18	599.24	599.29	599.34	599.40	599.45	599.51	599.56	599.61	599.65	599.70	599.76
BEAM C	597.97	598.03	598.09	598.14	598.20	598.25	598.31	598.37	598.42	598.48	598.53	598.59	598.65	598.69	598.74	598.79	598.83	598.88	598.93	598.98	599.03	599.08	599.14	599.19	599.24	599.30	599.35	599.41	599.46	599.52	599.56	599.61	599.66	599.71
BEAM B	597.77	597.83	597.89	597.94	598.00	598.05	598.11	598.17	598.22	598.28	598.33	598.39	598.44	598.49	598.54	598.59	598.63	598.68	598.73	598.78	598.83	598.88	598.93	598.99	599.04	599.10	599.15	599.21	599.26	599.31	599.36	599.40	599.45	599.51
BEAM A	597.57	597.63	597.69	597.74	597.80	597.85	597.91	597.96	598.02	598.08	598.13	598.19	598.24	598.29	598.34	598.39	598.43	598.48	598.53	598.58	598.63	598.68	598.73	598.79	598.84	598.90	598.95	599.00	599.06	599.11	599.16	599.20	599.25	599.31
EAST GUTTERLINE	597.54	597.60	597.65	597.71	597.77	597.82	597.88	597.93	597.99	598.04	598.10	598.16	598.21	598.26	598.31	598.35	598.40	598.45	598.50	598.55	598.60	598.65	598.70	598.76	598.81	598.86	598.92	598.97	599.03	599.08	599.13	599.17	599.22	599.27
EAST EDGE OF SLAB	597.71	597.76	597.82	597.87	597.93	597.99	598.04	598.10	598.15	598.21	598.26	598.32	598.38	598.42	598.47	598.52	598.57	598.61	598.66	598.71	598.76	598.81	598.87	598.92	598.97	599.03	599.08	599.14	599.19	599.25	599.29	599.33	599.38	599.44

TOP OF SLAB ELEVATIONS

LOCATION				℄ BOLTED SPLICE 4								℄ BOLTED SPLICE 5					℄ PIER 31				℄ BOLTED SPLICE 6											℄ BEARING ABUT. 32
	35	36	37	38	39	40	41	42	43	44	45	46	47	48	49	50	51	52	53	54	55	56	57	58	59	60	61	62	63	64	65	66	67
WEST EDGE OF SLAB	599.36	599.44	599.51	599.59	599.69	599.80	599.91	600.02	600.14	600.27	600.41	600.55	600.69	600.83	600.98	601.13	601.29	601.44	601.60	601.77	601.94	602.15	602.37	602.60	602.84	603.08	603.33	603.59	603.85	604.12	604.40	604.67	604.95
WEST GUTTERLINE	599.19	599.27	599.34	599.42	599.52	599.62	599.73	599.85	599.97	600.10	600.23	600.37	600.51	600.65	600.80	600.96	601.11	601.27	601.43	601.59	601.76	601.98	602.20	602.42	602.66	602.90	603.15	603.41	603.67	603.94	604.22	604.49	604.77
BEAM G	599.22	599.29	599.37	599.45	599.55	599.65	599.76	599.88	600.00	600.13	600.26	600.40	600.54	600.68	600.83	600.98	601.14	601.29	601.45	601.62	601.78	602.00	602.22	602.45	602.68	602.92	603.17	603.43	603.69	603.96	604.24	604.51	604.79
BEAM F	599.39	599.46	599.54	599.62	599.72	599.82	599.93	600.04	600.16	600.29	600.42	600.56	600.69	600.83	600.98	601.13	601.29	601.44	601.60	601.76	601.93	602.14	602.36	602.59	602.82	603.06	603.31	603.56	603.83	604.09	604.37	604.64	604.92
BEAM E	599.57	599.64	599.71	599.79	599.88	599.98	600.09	600.20	600.32	600.45	600.58	600.72	600.85	600.99	601.14	601.29	601.44	601.59	601.75	601.91	602.08	602.29	602.50	602.73	602.96	603.20	603.44	603.70	603.96	604.23	604.50	604.77	605.05
BEAM D	599.74	599.81	599.88	599.96	600.05	600.15	600.26	600.37	600.49	600.61	600.74	600.88	601.01	601.15	601.29	601.44	601.59	601.74	601.90	602.06	602.22	602.43	602.65	602.87	603.10	603.34	603.58	603.83	604.09	604.36	604.63	604.90	605.18
CENTERLINE APPROACH RDWY	599.82	599.89	599.96	600.04	600.13	600.23	600.33	600.44	600.56	600.68	600.81	600.95	601.08	601.22	601.36	601.51	601.66	601.81	601.96	602.12	602.29	602.49	602.71	602.93	603.16	603.40	603.64	603.89	604.15	604.41	604.68	604.96	605.23
BEAM C	599.78	599.84	599.91	599.99	600.08	600.18	600.28	600.39	600.51	600.63	600.76	600.89	601.03	601.16	601.30	601.45	601.61	601.75	601.91	602.07	602.23	602.44	602.65	602.87	603.10	603.34	603.58	603.83	604.08	604.35	604.62	604.89	605.17
BEAM B	599.57	599.64	599.71	599.78	599.87	599.97	600.07	600.18	600.29	600.41	600.54	600.67	600.80	600.94	601.08	601.23	601.38	601.53	601.68	601.84	602.00	602.20	602.42	602.63	602.86	603.09	603.34	603.58	603.84	604.10	604.37	604.64	604.92
BEAM A	599.36	599.43	599.50	599.57	599.66	599.76	599.86	599.96	600.08	600.20	600.32	600.45	600.58	600.72	600.86	601.00	601.15	601.30	601.45	601.60	601.77	601.97	602.18	602.40	602.62	602.85	603.09	603.34	603.59	603.85	604.12	604.39	604.67
EAST GUTTERLINE	599.33	599.40	599.47	599.54	599.63	599.72	599.82	599.93	600.04	600.16	600.29	600.42	600.55	600.68	600.82	600.97	601.11	601.26	601.41	601.57	601.73	601.93	602.14	602.36	602.58	602.82	603.05	603.30	603.55	603.81	604.08	604.35	604.63
EAST EDGE OF SLAB	599.50	599.56	599.63	599.70	599.79	599.89	599.99	600.09	600.21	600.32	600.45	600.58	600.71	600.84	600.98	601.12	601.27	601.42	601.57	601.73	601.89	602.09	602.30	602.52	602.74	602.97	603.21	603.46	603.71	603.97	604.24	604.51	604.78

NOTE:
HEXAGONAL NUMBERS CORRESPOND TO THE HEXAGONAL NUMBERS SHOWN ON DESIGN SHEET 196.

whks
engineers + planners + land surveyors

DESIGN FOR VARIABLE SKEW (L.A.)

2271'-6 x VARI. CONTINUOUS WELDED GIRDER BRIDGE-EBL W/14' BIKE TRAIL

138'-10 & 151'-0 7/8 END SPANS MULTIPLE LENGTH INTERIOR SPANS

SLAB ELEVATIONS-UNIT 4

STA. 6792+60.93 - 52' LEFT ℄ I-74 OCTOBER, 2015

SCOTT COUNTY

IOWA DEPARTMENT OF TRANSPORTATION - HIGHWAY DIVISION

DESIGN SHEET NO. 201 OF 282 FILE NO. 30253 DESIGN NO. 3408

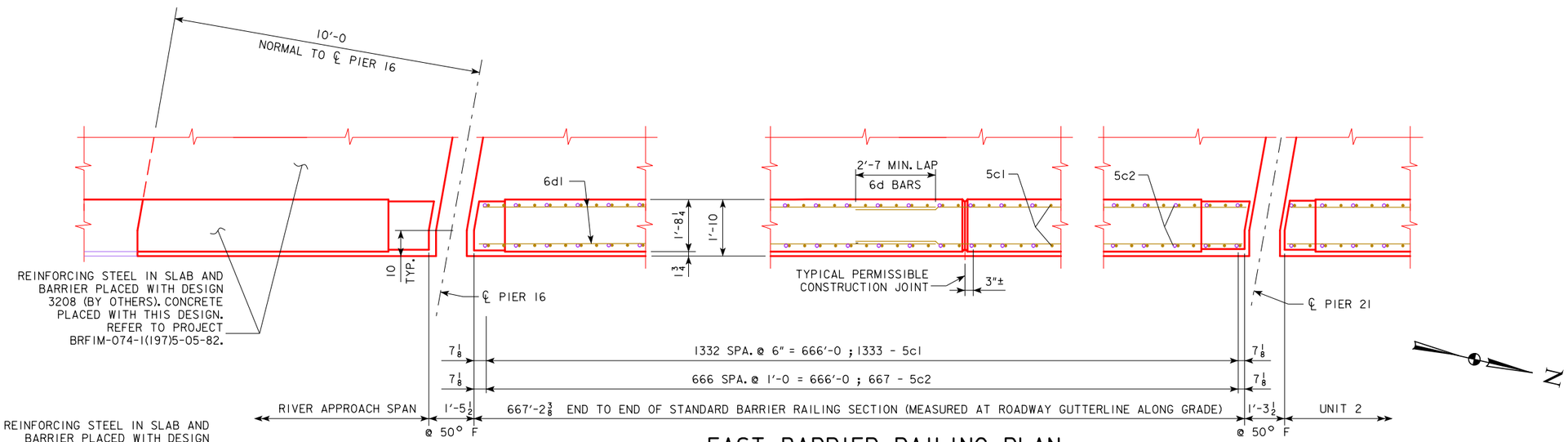

EAST BARRIER RAILING PLAN

SHOWN WITHOUT TRAFFIC BARRIER RAILING FOR CLARITY

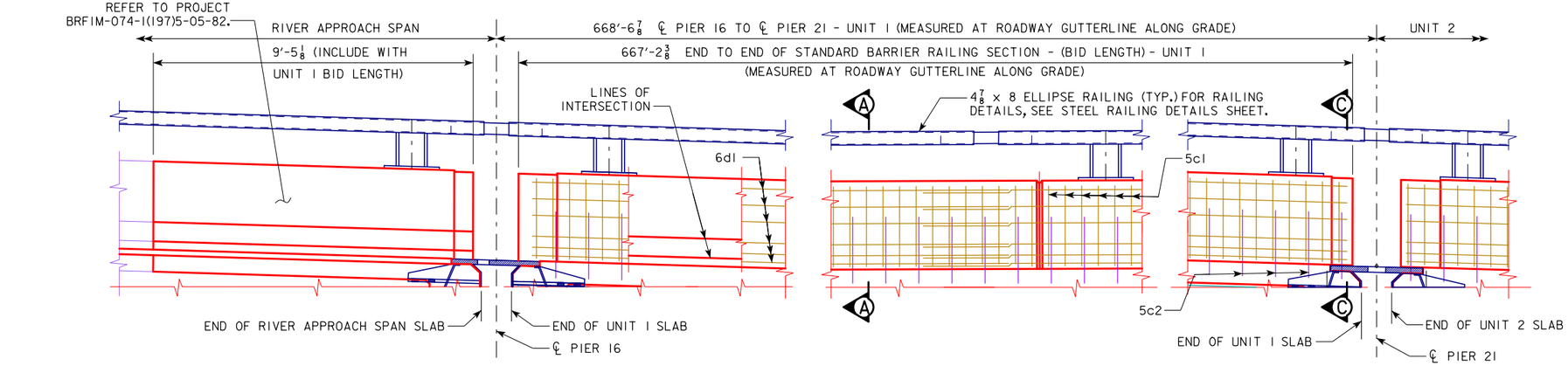

EAST BARRIER RAILING ELEVATION

LOOKING WEST

NOTES:

FINGER JOINTS IN PLAN VIEW AND SLIDING PLATES NOT SHOWN FOR CLARITY.

SEE DESIGN SHEET 215 FOR BARRIER RAILING NOTES, JOINT DETAILS, SECTION A-A AND SECTION C-C.

whks
engineers + planners + land surveyors

DESIGN FOR VARIABLE SKEW (L.A.)

2271'-6 x VARI. CONTINUOUS WELDED GIRDER BRIDGE-EBL W/14' BIKE TRAIL

138'-10 & 151'-0 7/8 END SPANS MULTIPLE LENGTH INTERIOR SPANS

BARRIER RAILING DETAILS - UNIT 1

STA. 6792+60.93 - 52' LEFT ℄ I-74 OCTOBER, 2015

SCOTT COUNTY

IOWA DEPARTMENT OF TRANSPORTATION - HIGHWAY DIVISION

DESIGN SHEET NO. 202 OF 282 FILE NO. 30253 DESIGN NO. 3408

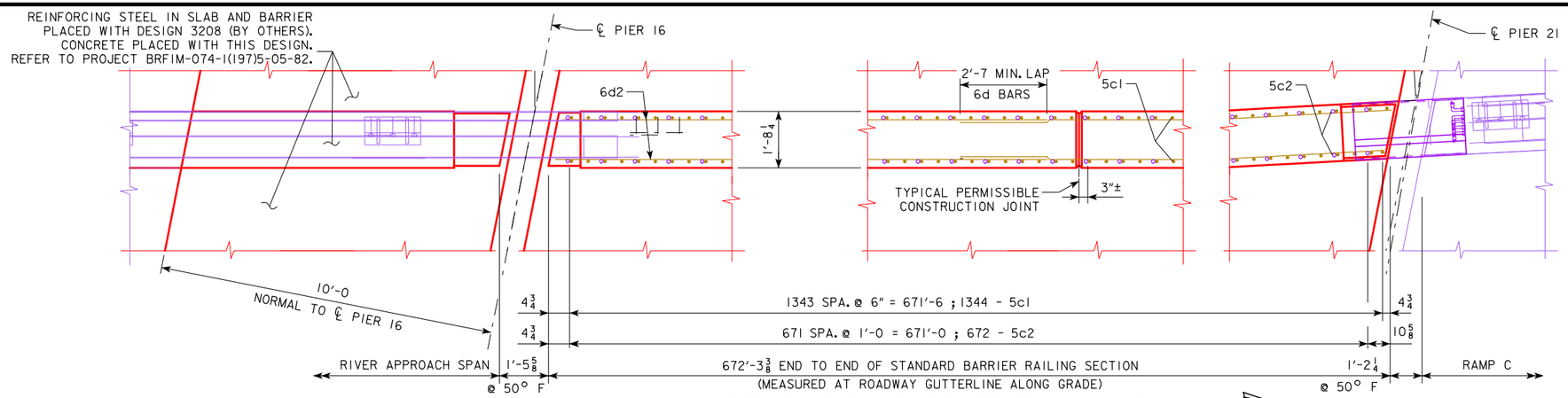

SEPARATION BARRIER RAILING PLAN

SHOWN WITHOUT TRAFFIC BARRIER RAILING FOR CLARITY

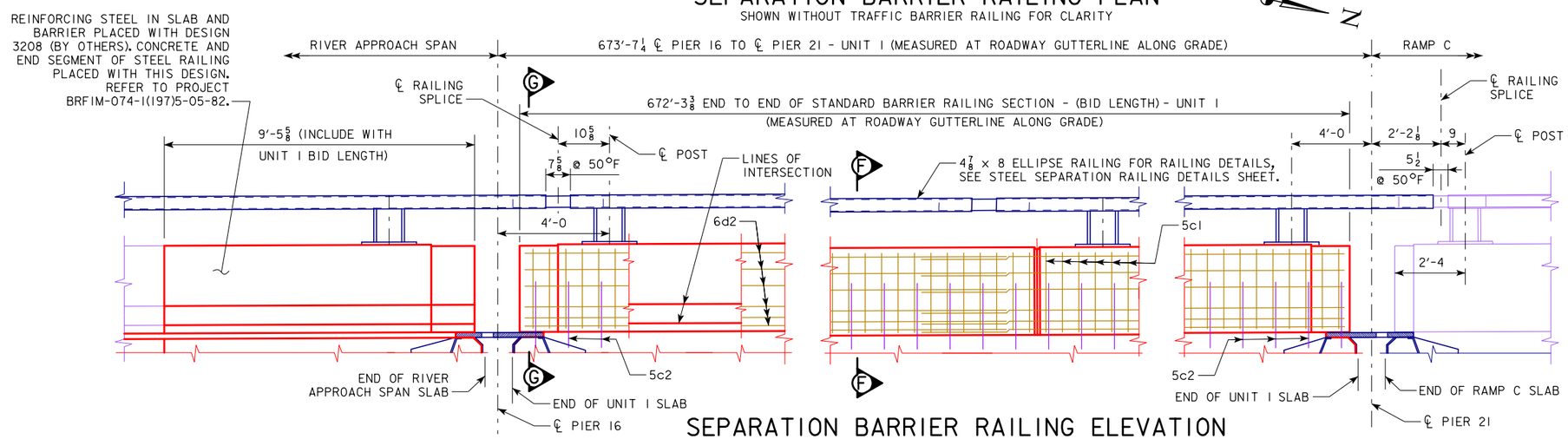

SEPARATION BARRIER RAILING ELEVATION

LOOKING WEST

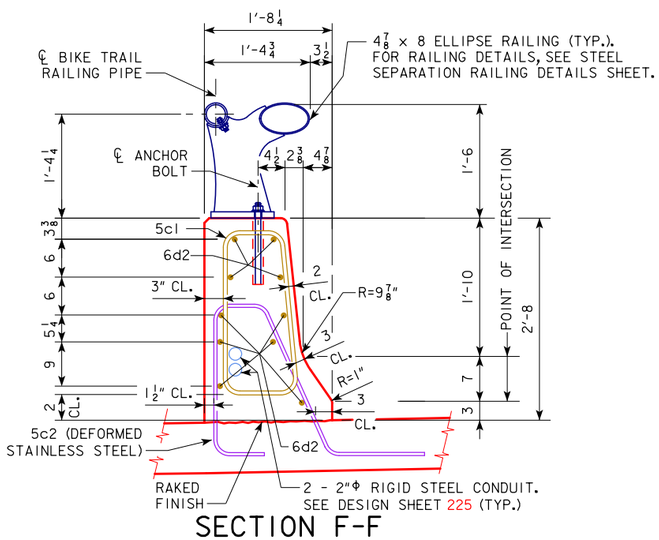

SECTION F-F

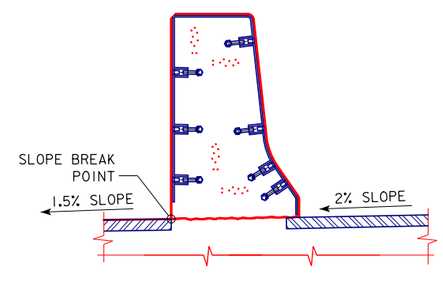

SECTION G-G

NOTES:

FINGER JOINTS IN PLAN VIEW AND SLIDING PLATES NOT SHOWN FOR CLARITY.

SEE DESIGN SHEET 215 FOR BARRIER RAILING NOTES AND JOINT DETAILS.

SEE DESIGN SHEET 222 FOR STEEL SEPARATION RAILING, POSTS, AND SPLICE DETAILS.

SEE DESIGN SHEET 225 TO 229 FOR CONDUIT DETAILS.

DESIGN FOR VARIABLE SKEW (L.A.)

2271'-6 × VARI. CONTINUOUS WELDED GIRDER BRIDGE-EBL W/14' BIKE TRAIL

138'-10 & 151'-0 7/8 END SPANS MULTIPLE LENGTH INTERIOR SPANS

SEPARATION BARRIER DETAILS-UNIT 1

STA. 6792+60.93 - 52' LEFT ℄ I-74 OCTOBER, 2015

SCOTT COUNTY

IOWA DEPARTMENT OF TRANSPORTATION - HIGHWAY DIVISION

DESIGN SHEET NO. 203 OF 282 FILE NO. 30253 DESIGN NO. 3408

whks engineers + planners + land surveyors

DESIGN TEAM JK / LG / RE	SCOTT COUNTY	PROJECT NUMBER BRFIM-074-1(200)5--05-82	SHEET NUMBER 204

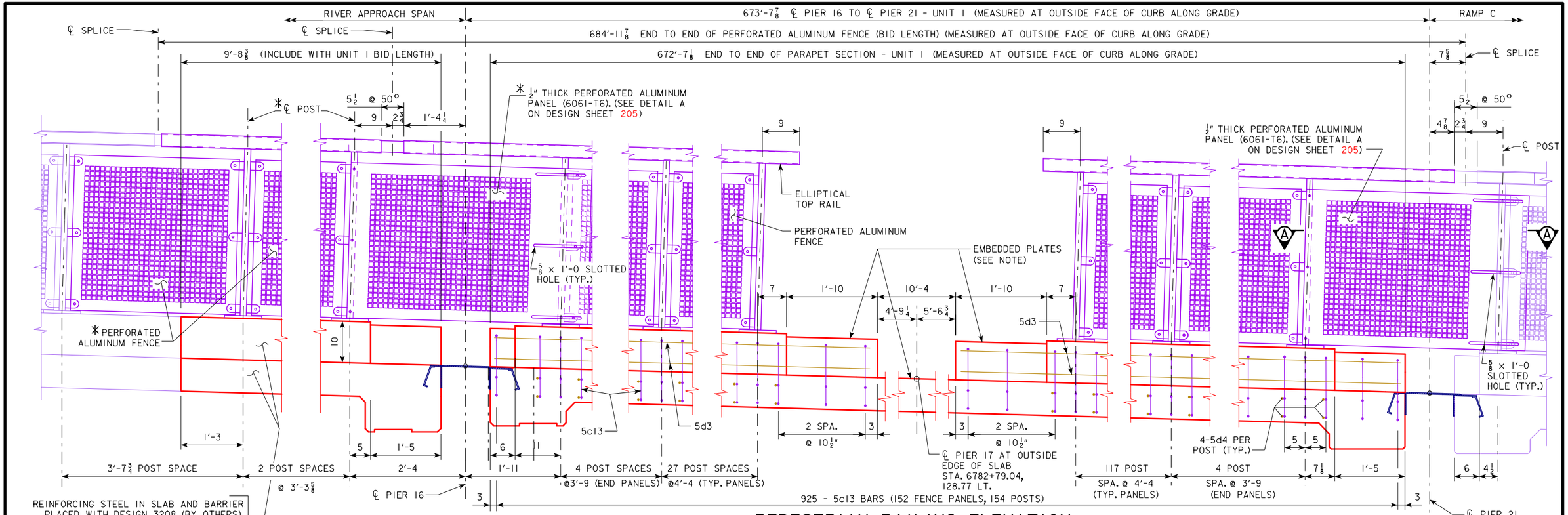

PEDESTRIAN RAILING ELEVATION

LOOKING WEST
(SLAB REINFORCING NOT SHOWN)

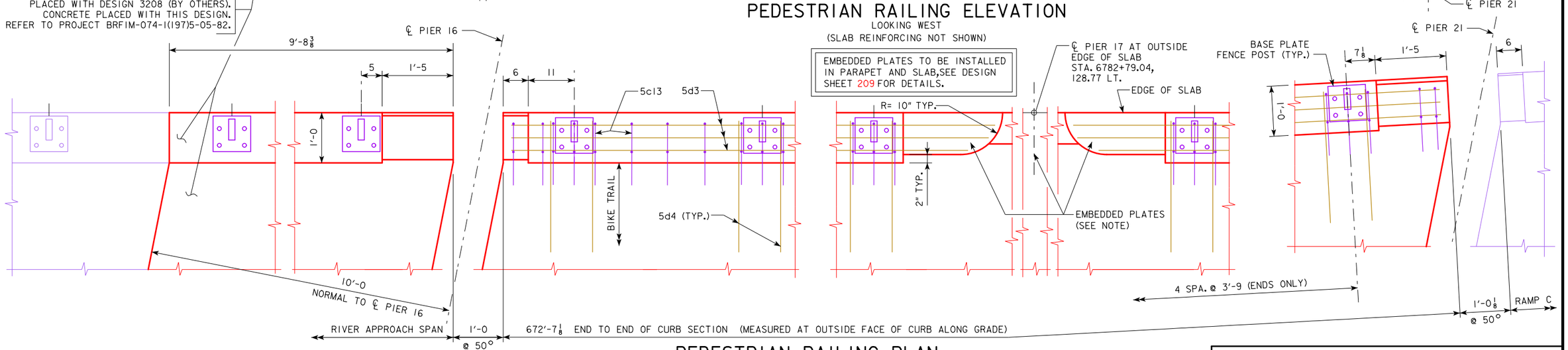

PEDESTRIAN RAILING PLAN

(SLAB REINFORCING NOT SHOWN)

* FURNISHING AND INSTALLING OF THE INDICATED POSTS AND FENCE PANELS INCLUDED IN THIS DESIGN.

SEE DESIGN SHEET 209 FOR LETDOWN STRUCTURE RAILING AND EXPANSION JOINT DETAILS AT PIER 17.

SEE PROJECT IM-074-1(255)5--13-82 FOR ADDITIONAL DETAILS OF LETDOWN STRUCTURE AND WALKWAY

NOTES:

SEE DESIGN SHEET 205 FOR SECTION A-A.

PEDESTRIAN RAILING IN PLAN VIEW AND BARRIER SLIDING PLATES NOT SHOWN FOR CLARITY.

SEE DESIGN SHEET 206 THRU 208 FOR RAILING DETAILS.

SEE DESIGN SHEETS 262 THRU 264 FOR SLIDING PLATE DETAILS.

SEE DETAIL 'B' ON DESIGN SHEET 205 FOR SPECIAL END PANELS.

N

whks
engineers + planners + land surveyors

DESIGN FOR VARIABLE SKEW (L.A.)

2271'-6 x VARI. CONTINUOUS WELDED GIRDER BRIDGE-EBL W/14' BIKE TRAIL

138'-10 & 151'-0 7/8 END SPANS MULTIPLE LENGTH INTERIOR SPANS

PEDESTRIAN RAILING DTLS.-UNIT 1

STA. 6792+60.93 - 52' LEFT ℄ I-74 OCTOBER, 2015

SCOTT COUNTY

IOWA DEPARTMENT OF TRANSPORTATION - HIGHWAY DIVISION

DESIGN SHEET NO. 204 OF 282 FILE NO. 30253 DESIGN NO. 3408

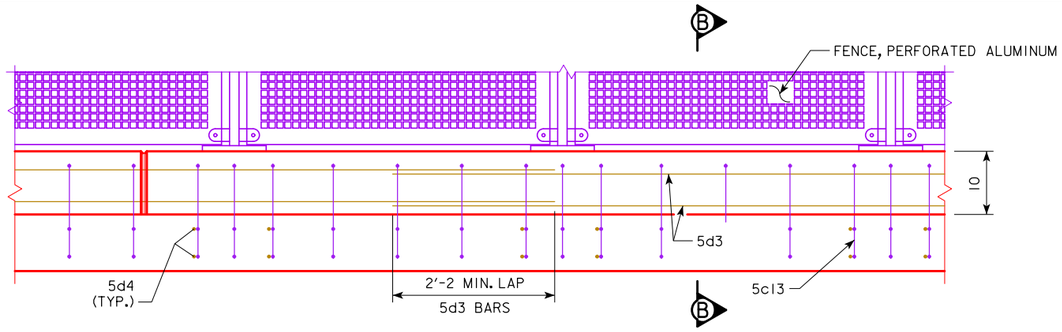

CONCRETE PARAPET ELEVATION

LOOKING WEST
(SLAB REINFORCING NOT SHOWN)

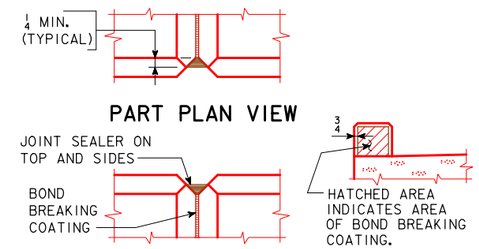

CONCRETE PARAPET JOINT DETAILS

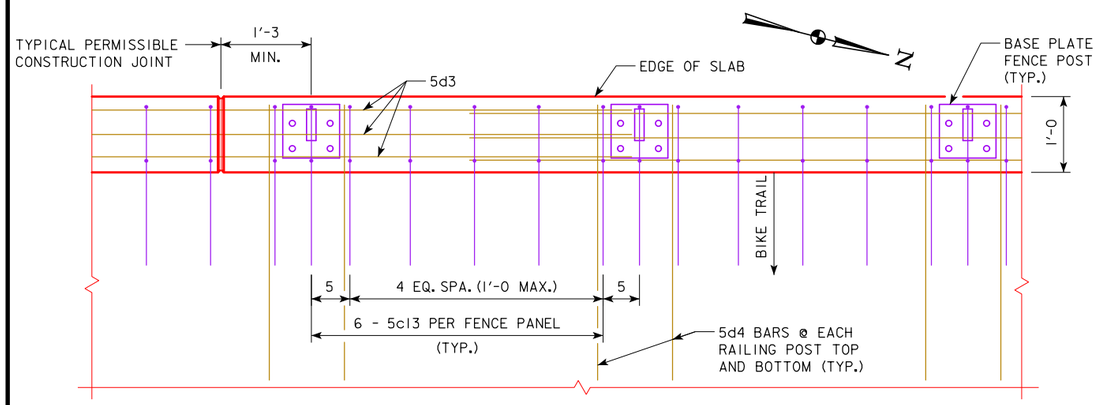

CONCRETE PARAPET PLAN

(SLAB REINFORCING NOT SHOWN)

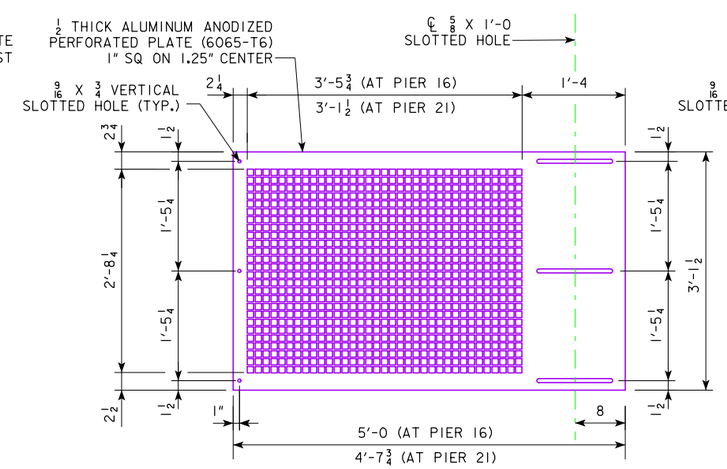

DETAIL A
PANEL LAYOUT (FLATTENED)

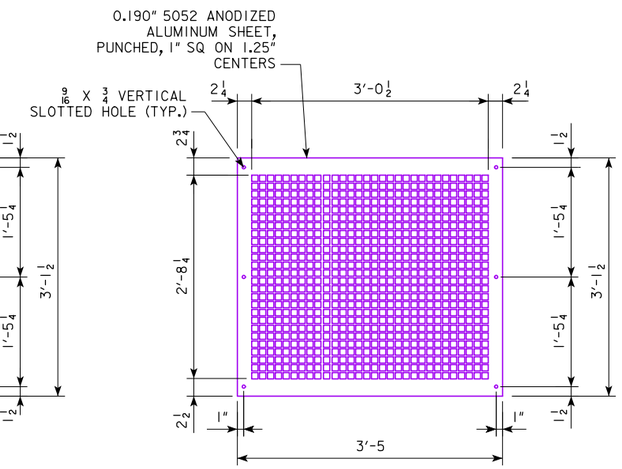

DETAIL B
PANEL LAYOUT (FLATTENED)

(FOR 3'-9 POST SPACINGS AT ENDS OF RAILING ONLY)

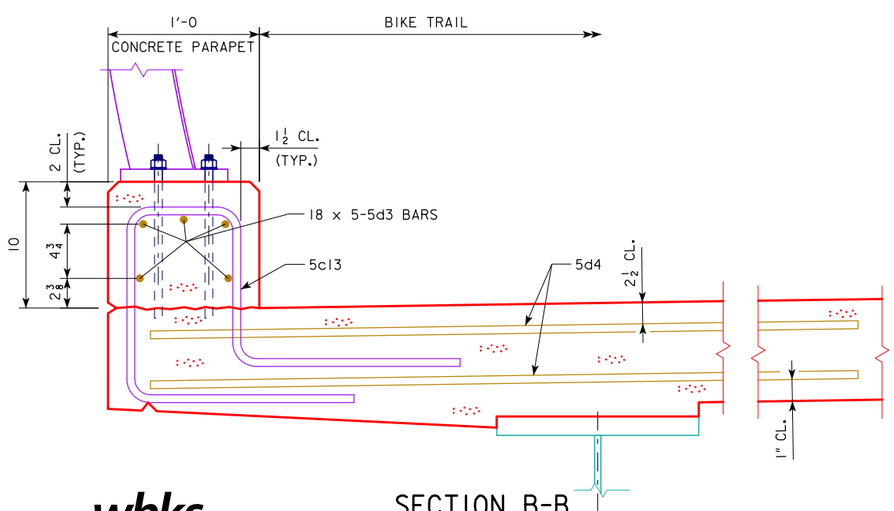

SECTION B-B

(SLAB REINFORCING NOT SHOWN)

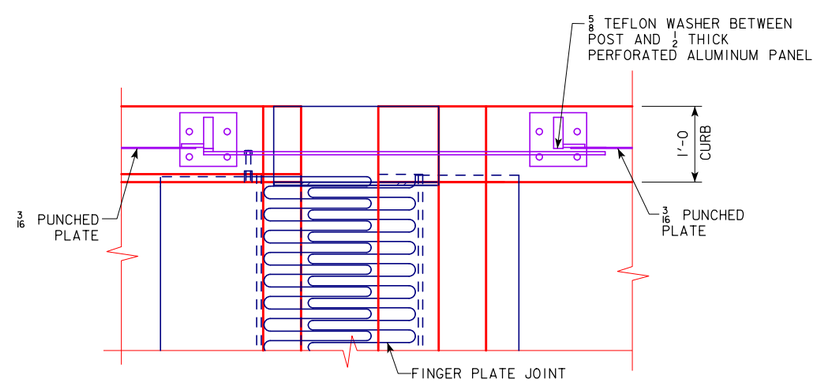

SECTION A-A

NOTES:

SEE DESIGN SHEET 206 FOR PERFORATED ALUMINUM FENCE DETAILS.

CLEAR DISTANCE FROM FACE OF CONCRETE TO NEAR REINFORCING BAR SHALL BE 2 INCHES UNLESS OTHERWISE NOTED OR SHOWN.

DESIGN SHEET 204 FOR LOCATION OF DETAIL A.

DESIGN SHEET 204 FOR LOCATION OF SECTION A-A.

whks
engineers + planners + land surveyors

DESIGN FOR VARIABLE SKEW (L.A.)

2271'-6 x VARI. CONTINUOUS WELDED GIRDER BRIDGE-EBL W/14' BIKE TRAIL

138'-10 & 151'-0 7/8 END SPANS MULTIPLE LENGTH INTERIOR SPANS

PEDESTRIAN RAILING DTLS.-UNIT 1

STA. 6792+60.93 - 52' LEFT ℄ I-74 OCTOBER, 2015

SCOTT COUNTY

IOWA DEPARTMENT OF TRANSPORTATION - HIGHWAY DIVISION

DESIGN SHEET NO. 205 OF 282 FILE NO. 30253 DESIGN NO. 3408

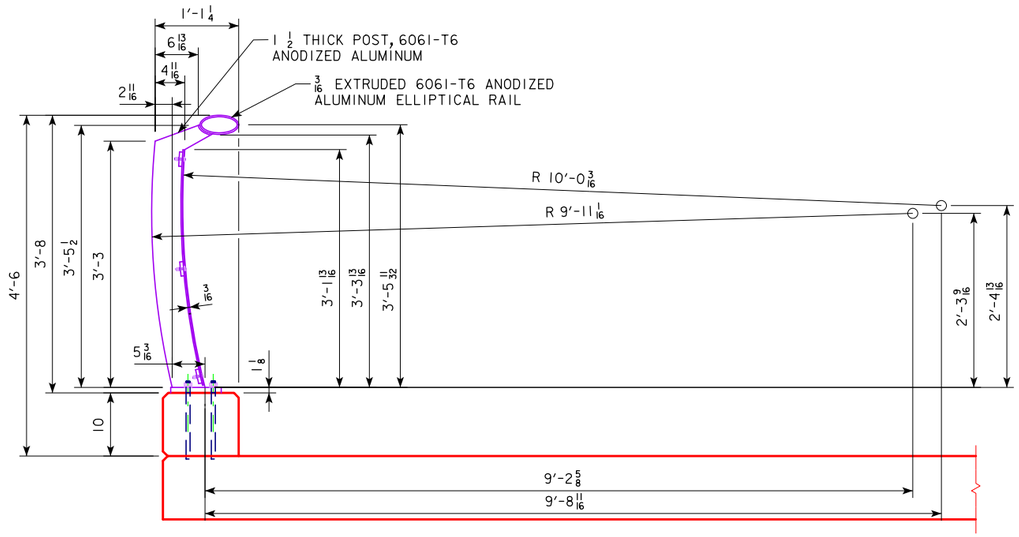

TYPICAL SECTION THRU RAILING

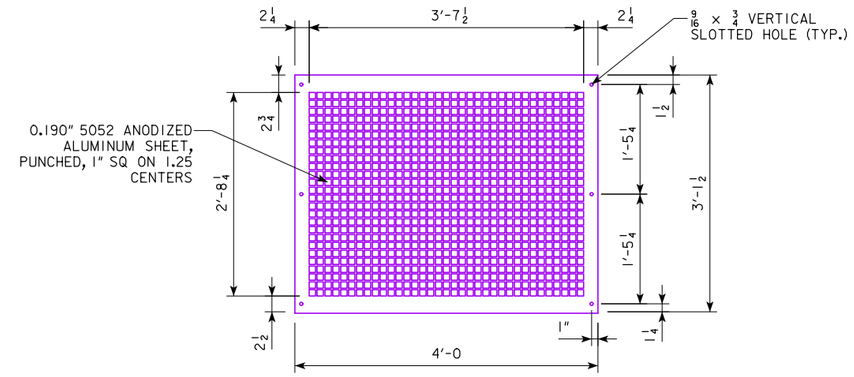

PANEL LAYOUT (FLATTENED)

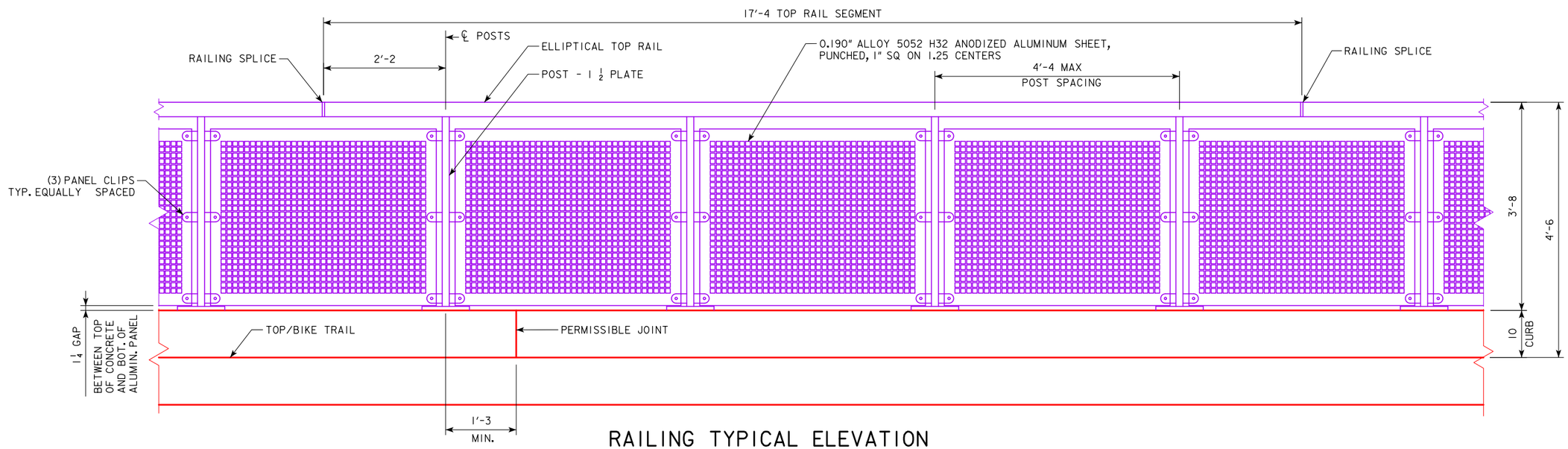

RAILING TYPICAL ELEVATION

NOTE:
SEE DESIGN SHEET 207 FOR NOTES.

whks
engineers + planners + land surveyors

DESIGN FOR VARIABLE SKEW (L.A.)

227'-6 x VARI. CONTINUOUS WELDED GIRDER BRIDGE-EBL W/14' BIKE TRAIL

138'-10 & 151'-0 7/8 END SPANS MULTIPLE LENGTH INTERIOR SPANS

PEDESTRIAN RAILING DTLS.-UNIT 1

STA. 6792+60.93 - 52' LEFT ℄ I-74 OCTOBER, 2015

SCOTT COUNTY

IOWA DEPARTMENT OF TRANSPORTATION - HIGHWAY DIVISION

DESIGN SHEET NO. 206 OF 282 FILE NO. 30253 DESIGN NO. 3408

DESIGN TEAM JK / LG / RE	SCOTT COUNTY	PROJECT NUMBER BRFIM-074-1(200)5--05-82	SHEET NUMBER 207

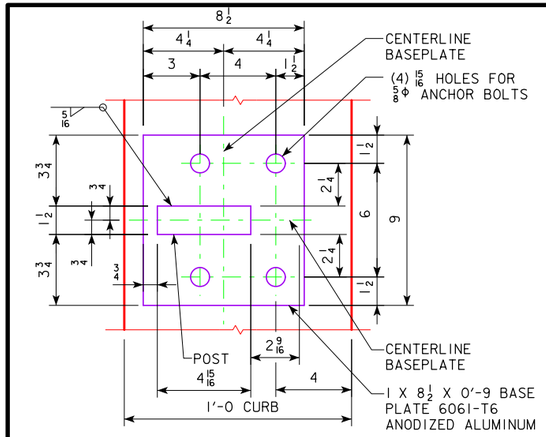

TYPICAL BASE PLATE PLAN DETAIL

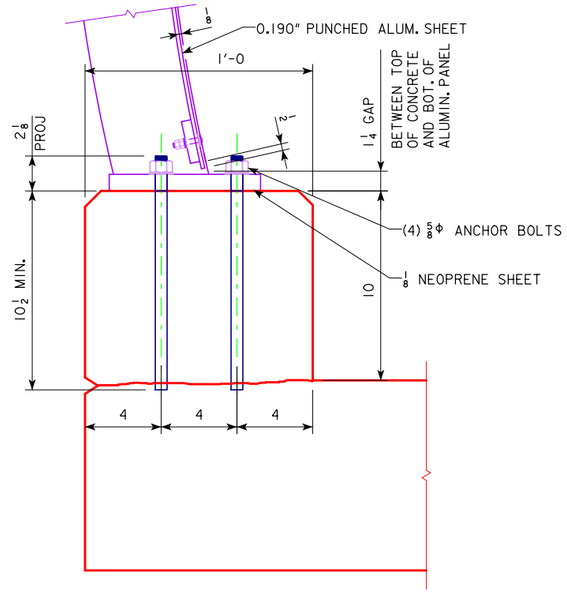

SECTION THRU BASE OF RAILING

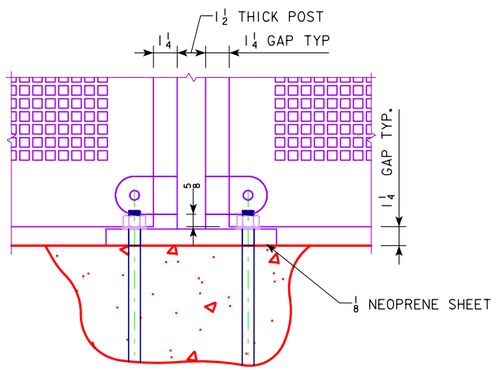

TYP. BOTTOM OF PANEL DETAIL

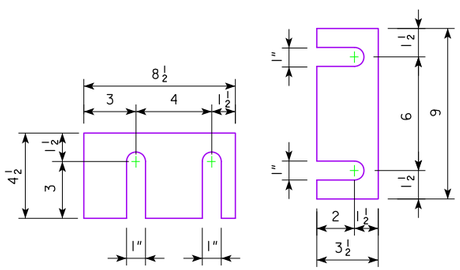

SHIM DETAILS

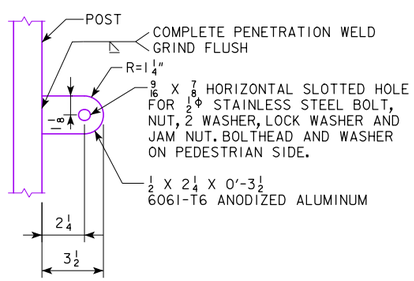

RAILING PANEL CLIP CONNECTION

PEDESTRIAN RAILING NOTES

THE PEDESTRIAN RAIL IS TO BE BID ON A LINEAL FOOT BASIS FOR EACH TYPE, MEASURED END TO END OF RAIL. THE PRICE BID FOR PEDESTRIAN RAIL OF EACH TYPE SHALL BE FULL COMPENSATION FOR FURNISHING ALL MATERIAL, INCLUDING ANCHOR BOLTS AND SHIMS, AND ALL OF THE EQUIPMENT AND LABOR REQUIRED TO ERECT THE RAIL IN ACCORDANCE WITH THESE PLANS AND SPECIFICATIONS.

ALL MATERIALS AND WORKMANSHIP SHALL BE IN ACCORDANCE WITH THE IOWA STANDARD SPECIFICATIONS WITH CURRENT GENERAL SUPPLEMENTAL SPECIFICATIONS.

ENDS OF RAIL SECTIONS ARE TO BE SAWED OR MILLED. ALL CUT ENDS ARE TO BE TRUE, SMOOTH, AND FREE OF BURRS OR RAGGED EDGES.

NO PAINTING WILL BE REQUIRED.

STAINLESS STEEL BOLTS SHALL BE ACCORDING TO ASTM A193-12B, CLASS 1 B8 (30 KSI MINIMUM OR 223 HB MINIMUM) OR CLASS 2 B8 (50 KSI MINIMUM OR 321 HB MINIMUM). STAINLESS STEEL NUTS SHALL BE ACCORDING TO ASTM A194-12 GRADE 8, 8M, OR 8F WITH A UNC SERIES CLASS 2B FIT. STAINLESS STEEL WASHERS SHALL BE PLAIN FLAT, TYPE 304 OR 304L, ACCORDING TO FEDERAL SPECIFICATION FF-W-92. STAINLESS STEEL BOLTS SHALL BE SNUG TIGHTENED IN ACCORDANCE WITH IM 453.07.

ANCHOR BOLTS SHALL BE 5/8" DIA., A193-12B GR. B7, BE FULLY THREADED WITH HEAVY HEX NUTS AND ONE HARDENED WASHER AND ONE 1 3/4" O.D. WASHER EACH. EMBED THREADED RODS 10 1/2" MIN. INTO CONCRETE PARAPET. ANCHOR BOLTS, NUTS, AND WASHERS SHALL BE GALVANIZED IN ACCORDANCE WITH ASTM F2329. ADHESIVE BONDING MATERIAL SYSTEM SHALL BE IN ACCORDANCE WITH MATERIALS I.M. 491.11. INSTALLED ANCHORS SHALL BE CAPABLE OF OBTAINING AN ULTIMATE LOAD PER THREADED ROD OF 8 KIPS IN TENSION FOR THE SPACING AND EDGE DISTANCE SHOWN IN THE PLANS.

ALUMINUM POST AND FRAMING MEMBERS SHALL COMPLY WITH THE REQUIREMENTS OF ASTM B221-12 AND ASTM B429-10 AND BE OF GRADE 6061-T6 AND MEET AMERICAN NATIONAL STANDARD DIMENSIONAL TOLERANCES FOR ALUMINUM MILL PRODUCTS. ALUMINUM 5052 H32 SHEET PANELS SHALL COMPLY WITH THE REQUIREMENTS OF ASTM B209-10.

ANY WELDS WITH BURRS ON THE FRAMING MEMBER SHALL BE GROUND FLUSH. WELDING SHALL COMPLY WITH THE REQUIREMENTS OF AWS D1.2, STRUCTURAL WELDING CODE - ALUMINUM.

ALUMINUM FILLER ALLOY ER5356 OR ER5556 SHALL BE USED [IOWA DOT STANDARD SPECIFICATIONS 4187.01, A, 7]. ONLY MICROSCOPICALLY CLEAN WELDING WIRE (THOSE WHICH HAVE BEEN SHAVED AFTER DRAWING) SHOULD BE USED, AND SPOOLS OF WIRE REMAINING AT THE END OF THE DAY'S PRODUCTION SHOULD BE SEALED IN POLYETHYLENE BAGS. WELDING WIRE IN DRIVE ROLLS AND GUN NOT SO PROTECTED SHALL BE DISCARDED.

THE INSTALLED ORIENTATION OF THE PUNCHED PANELS MUST BE PUNCHED TOWARD THE INSIDE, WITH THE BREAKOUT SIDE TOWARD THE OUTSIDE IN CASE OF SHARP EDGES AND FOR CONSISTENT APPEARANCE. PUNCHED PANELS SHALL EXHIBIT NO BURRS. IF RAW ALUMINUM STOCK EXHIBITS DIFFERENT FINISHES ON EACH FACE, THE PUNCHING SHALL BE PERFORMED ON THE BRIGHTEST FACE, WHICH SHALL THEN BE MOUNTED TOWARD THE PEDESTRIAN SIDE.

ALL AREAS TO BE WELDED SHALL BE BRUSHED WITH STAINLESS STEEL BRUSHES IMMEDIATELY PRIOR TO WELDING. ALL ALUMINUM WELDING SHALL BE PERFORMED BY THE GAS METAL ARC WELDING (GMAW) PROCESS. ONLY THE STRINGER BEAD TECHNIQUE SHALL BE USED. INTERPASS TEMPERATURE SHALL NOT EXCEED 200 DEGREES FAHRENHEIT. ALL INITIAL ROOT PASSES SHALL NOT EXCEED 5/16" INCH AND MUST PENETRATE THE ROOT. THE CONVEXITY OF A FILLET WELD SHALL NOT EXCEED 1/16" INCH.

POST AND FRAMING MEMBERS SHALL HAVE A SMOOTH, FLUSH SURFACE.

ANODIZE COATING SHALL BE PER AAMA 611-98 - VOLUNTARY SPECIFICATIONS FOR ANODIZED ARCHITECTURAL ALUMINUM. USE A CLASS 1 CLEAR ANODIZED FINISH (REQUIRES MINIMUM COATING THICKNESS OF 0.7 MIL). SURFACE PREPARATION SHALL BE IN ACCORDANCE WITH ASTM D 3933-10.

PROVIDE TWO 1/16" INCH ALUMINUM SHIMS OF EACH TYPE FOR EACH RAILING POST, TO BE USED AS REQUIRED.

PROVIDE AN 1/8" INCH THICK NEOPRENE SHEET BETWEEN CONCRETE AND SHIMS UNDER EACH RAIL POST BASE PLATE. THE NEOPRENE SHEET SHALL MATCH THE LENGTH AND WIDTH OF THE MASONRY PLATE.

THE NEOPRENE SHEETS ARE TO BE 50, 60, OR 70 DUROMETER HARDNESS AND SHALL MEET THE REQUIREMENTS OF IOWA DOT STANDARD SPECIFICATIONS SECTION 4195.02.

APPLY A NEAT CAULK BEAD AROUND PLATE EDGES. DO NOT CONTAMINATE SURROUNDING CONCRETE SURFACES WITH CAULK. CAULK SHALL BE LIGHT GREY NON-SLAG LATEX MARKETED FOR OUTDOOR USE. NO TESTING OR CERTIFICATION IS REQUIRED.

POSTS ARE TO BE SET NORMAL TO GRADE.

PROVIDE A RAILING MOCKUP FOR REVIEW AND APPROVAL. FOR THE PURPOSES OF THE MOCKUP, ONE ASSEMBLY INCLUDING A SINGLE STANDARD RAILING PANEL WITH 2 POSTS AND A TOP RAIL WILL BE REQUIRED.

THE ELLIPTICAL RAIL SHALL BE 6061-T6, 3/16" THICK AND SHALL CONFORM TO THE REQUIREMENTS OF ASTM B429-10. THE HEAT TREATMENT SHALL BE IN ACCORDANCE WITH PRACTICE B918-09.

THE 0.190 IN. THICK PUNCHED PLATE SHALL MEET THE REQUIREMENTS OF ASTM B209-10 ALLOY 5052 TEMPER H32 WITH A MINIMUM YIELD STRENGTH OF 23 KSI AND A MINIMUM ELONGATION OF 9% IN 2 INCHES. PUNCHED PLATES SHALL HAVE STANDARD MILL FINISH.

THE CONTRACTOR SHALL FURNISH A CERTIFICATE STATING THAT EACH LOT HAS BEEN SAMPLED, TESTED BY A CERTIFIED LAB AND INSPECTED IN ACCORDANCE WITH THE SPECIFICATION REQUIREMENT OF THE CORRESPONDING ASTM STANDARD.

IMMEDIATELY FOLLOWING FABRICATION, PROTECT ALL ALUMINUM RAILING AND PANEL SURFACES FROM DAMAGE DURING SHIPPING, HANDLING, STORAGE AND INSTALLATION. PROTECTIVE MEASURES SHALL REMAIN IN PLACE UNTIL FINAL ASSEMBLY AND INSTALLATION. REPAIR OR REPLACEMENT OF DAMAGED COMPONENTS SHALL BE AT THE CONTRACTOR'S COST AND TO THE SATISFACTION OF THE ENGINEER AT NO ADDITIONAL COST TO THE PROJECT.

whks
engineers + planners + land surveyors

DESIGN FOR VARIABLE SKEW (L.A.)

2271'-6 x VARI. CONTINUOUS WELDED GIRDER BRIDGE-EBL W/14' BIKE TRAIL

138'-10 & 151'-0 7/8 END SPANS MULTIPLE LENGTH INTERIOR SPANS

PEDESTRIAN RAILING DTLS.-UNIT 1

STA. 6792+60.93 - 52' LEFT ℄ I-74 OCTOBER, 2015

SCOTT COUNTY

IOWA DEPARTMENT OF TRANSPORTATION - HIGHWAY DIVISION

DESIGN SHEET NO. 207 OF 282 FILE NO. 30253 DESIGN NO. 3408

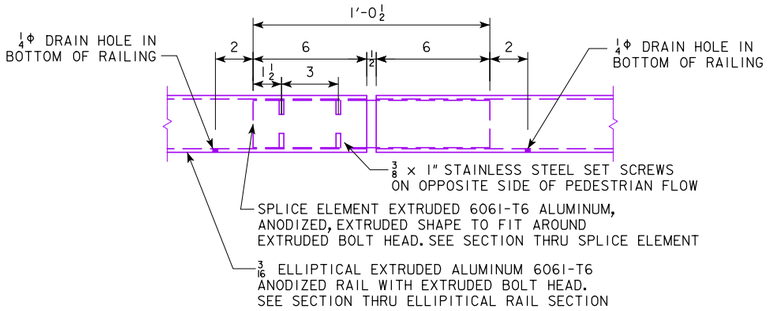

TYPICAL ELLIPTICAL RAILING SPLICE DETAIL

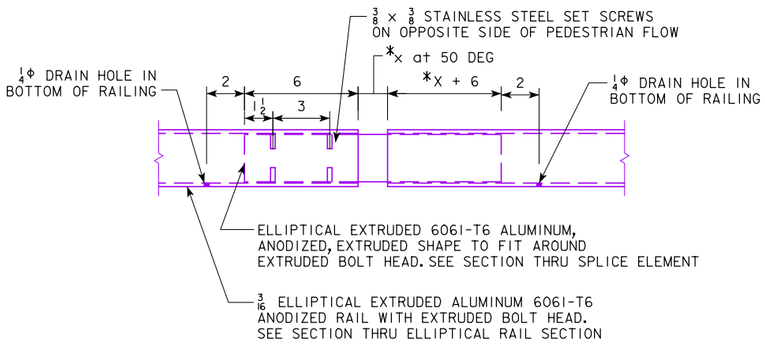

TYPICAL ELLIPTICAL RAILING EXPANSION JOINT SPLICE DETAIL

* DIMENSION "X" VARIES; SEE RAILING DETAILS ON DESIGN SHEETS 204 & 216 THRU 220

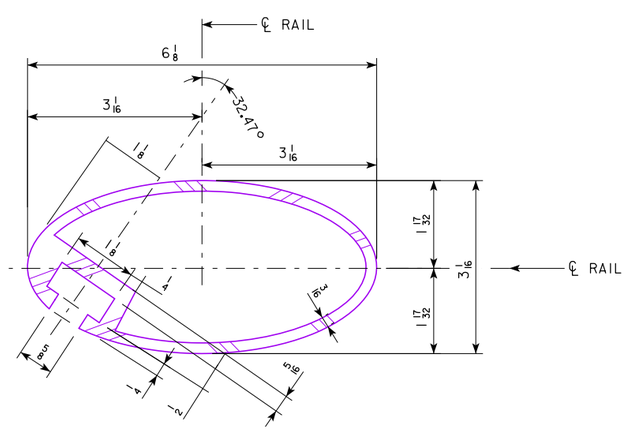

SECTION THRU ELLIPTICAL RAIL SECTION

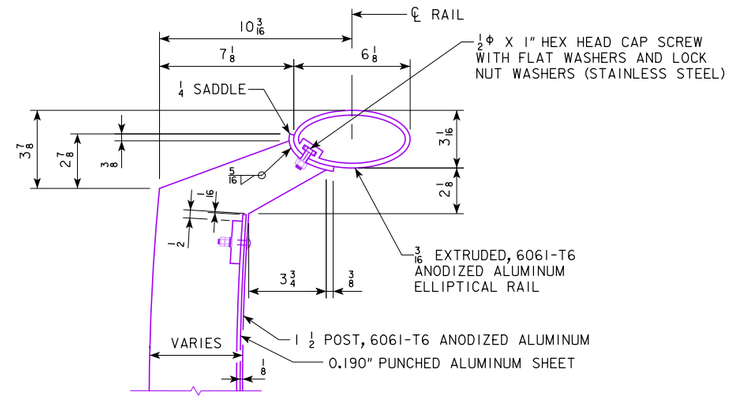

ELLIPTICAL RAILING POST CONNECTION DETAIL

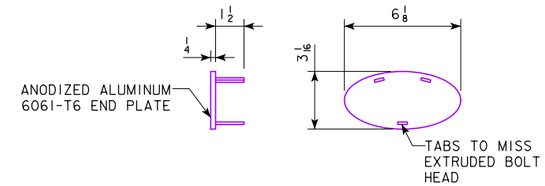

CAST END CAP FOR ELLIPTICAL RAIL

DRIVE FIT TYPE

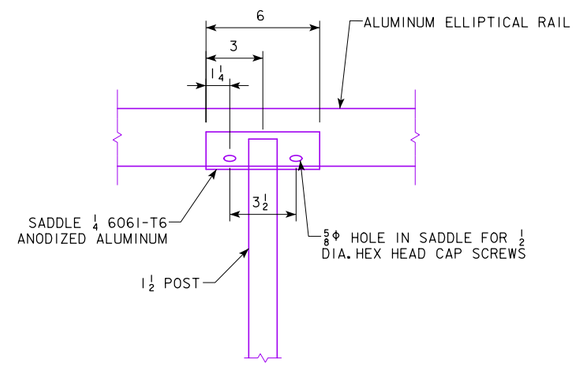

ELLIPTICAL RAILING CONNECTION LOOKING AT BACK FACE

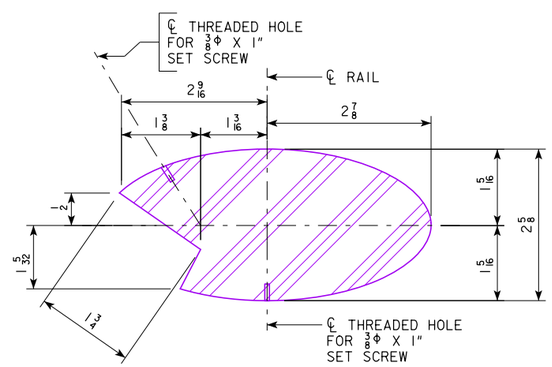

SECTION THRU SPLICE ELEMENT

NOTE: SPLICE MUST BE A SLIDING FIT IN RAIL SECTION

whks
engineers + planners + land surveyors

DESIGN FOR VARIABLE SKEW (L.A.)

2271'-6 x VARI. CONTINUOUS WELDED GIRDER BRIDGE-EBL W/14' BIKE TRAIL

138'-10 & 151'-0 7/8 END SPANS MULTIPLE LENGTH INTERIOR SPANS

PEDESTRIAN RAILING DTLS.-UNIT 1

STA. 6792+60.93 - 52' LEFT ℄ I-74 OCTOBER, 2015

SCOTT COUNTY

IOWA DEPARTMENT OF TRANSPORTATION - HIGHWAY DIVISION

DESIGN SHEET NO. 208 OF 282 FILE NO. 30253 DESIGN NO. 3408

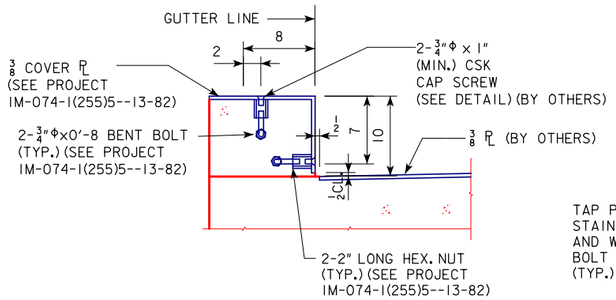

SECTION E-E

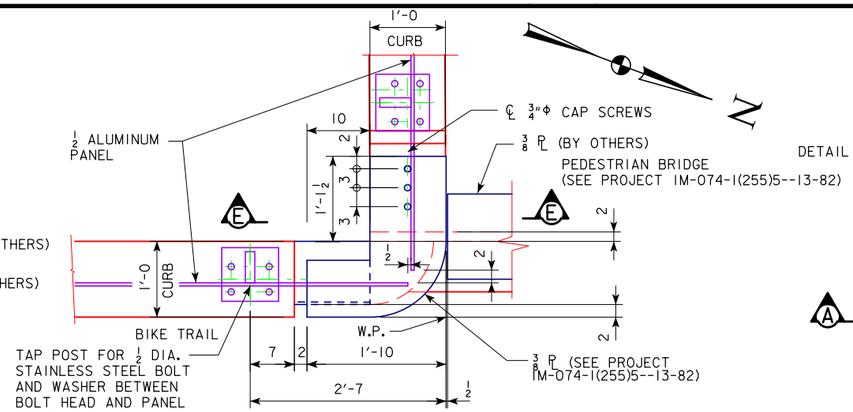

DETAIL I

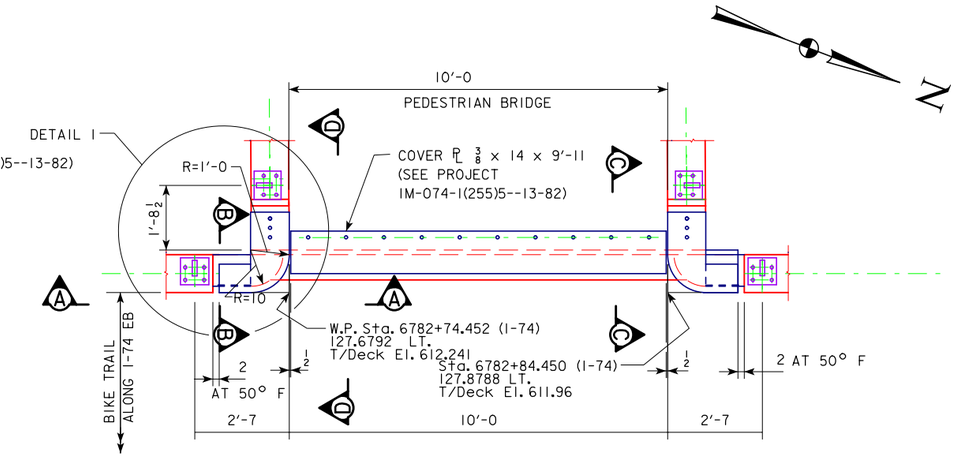

PLAN - DECK LEVEL

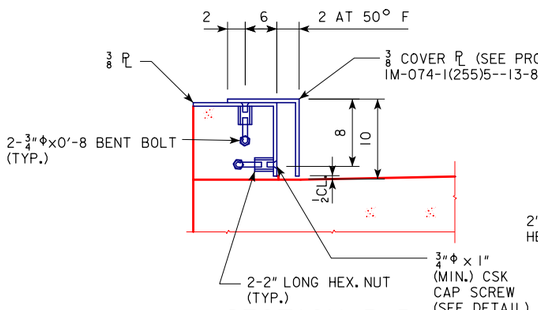

SECTION B-B

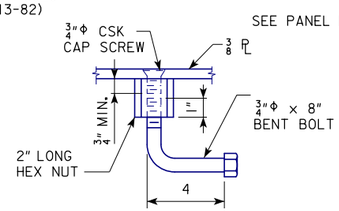

BENT BOLT DETAIL

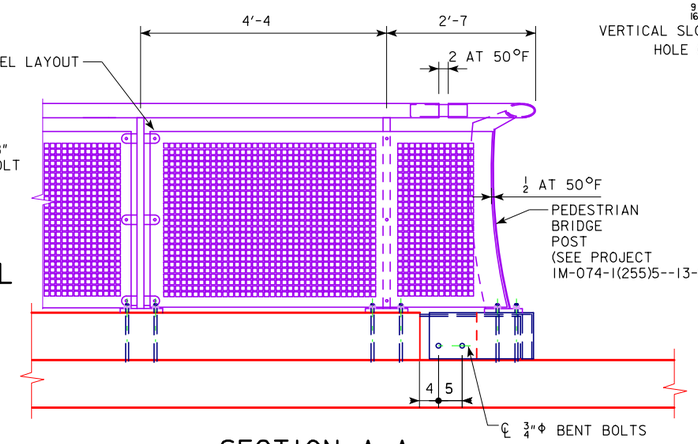

SECTION A-A

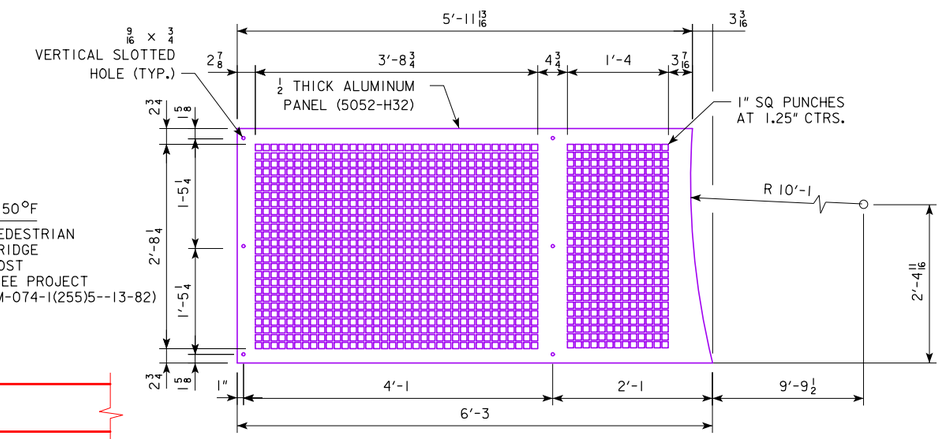

PANEL LAYOUT (FLATTENED)

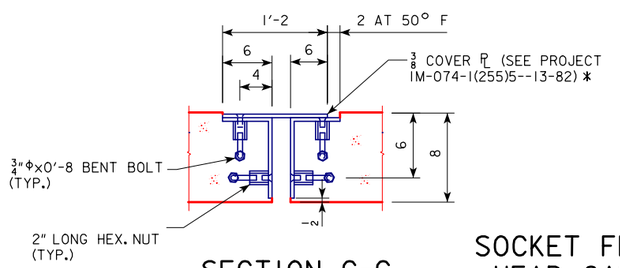

SECTION C-C

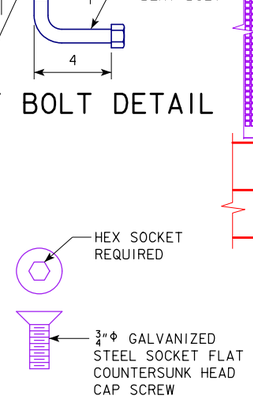

SOCKET FLAT COUNTERSUNK HEAD CAP SCREW DETAIL

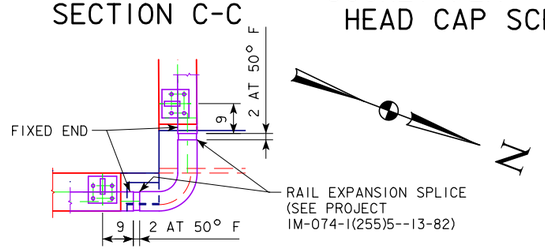

PLAN - RAILING LEVEL

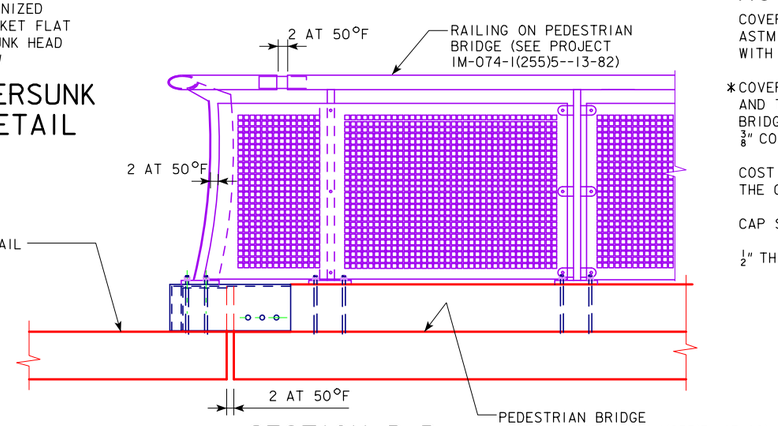

SECTION D-D

NOTES

COVER PLATES SHALL BE ASTM A709 GRADE 36. THE BOLTS SHALL MEET THE REQUIREMENTS OF ASTM A307. THE PLATES, BOLTS, NUTS AND CAP SCREWS ARE TO BE GALVANIZED IN ACCORDANCE WITH ARTICLE 4100.07 OF THE STANDARD SPECIFICATIONS.

*COVER PLATE SURFACE SHALL BE RECESSED 1/4" FROM BIKE TRAIL AND PEDESTRIAN BRIDGE AND THE PROFILE OF THE PLATE SHALL MATCH THE PROFILE OF THE BIKE TRAIL AND PEDESTRIAN BRIDGE SURFACE. IT IS INTENDED THAT THE 5/8" RECESSED AREA BE FORMED SO THAT WHEN THE 3/8" COVER PLATE IS INSTALLED, THE PLATE WILL BE ABLE TO MOVE FREELY IN THE RECESSED AREA.

COST OF FURNISHING AND INSTALLING THE COVER PLATE ASSEMBLY SHALL BE INCLUDED IN THE CONTRACT UNIT PRICE FOR STRUCTURAL CONCRETE (BRIDGE).

CAP SCREWS SHALL BE COUNTERSUNK 1/16" BELOW THE TOP OF THE PLATE.

1/2" THICK ALUMINUM PANEL SHALL MEET THE REQUIREMENTS OF ASTM B209-10 ALLOY 5052 TEMPER H32.

DESIGN FOR VARIABLE SKEW (L.A.)

2271'-6 x VARI. CONTINUOUS WELDED GIRDER BRIDGE-EBL W/14' BIKE TRAIL

138'-10 & 151'-0 7/8 END SPANS MULTIPLE LENGTH INTERIOR SPANS

RAILING DETAILS @ LETDOWN

STA. 6792+60.93 - 52' LEFT ℄ I-74 OCTOBER, 2015

SCOTT COUNTY

IOWA DEPARTMENT OF TRANSPORTATION - HIGHWAY DIVISION

DESIGN SHEET NO. 209 OF 282 FILE NO. 30253 DESIGN NO. 3408

benesch engineers · scientists · planners
Alfred Benesch & Company
205 North Michigan Avenue, Suite 2400
Chicago, Illinois 60601
312-565-0450 Job No. 10061

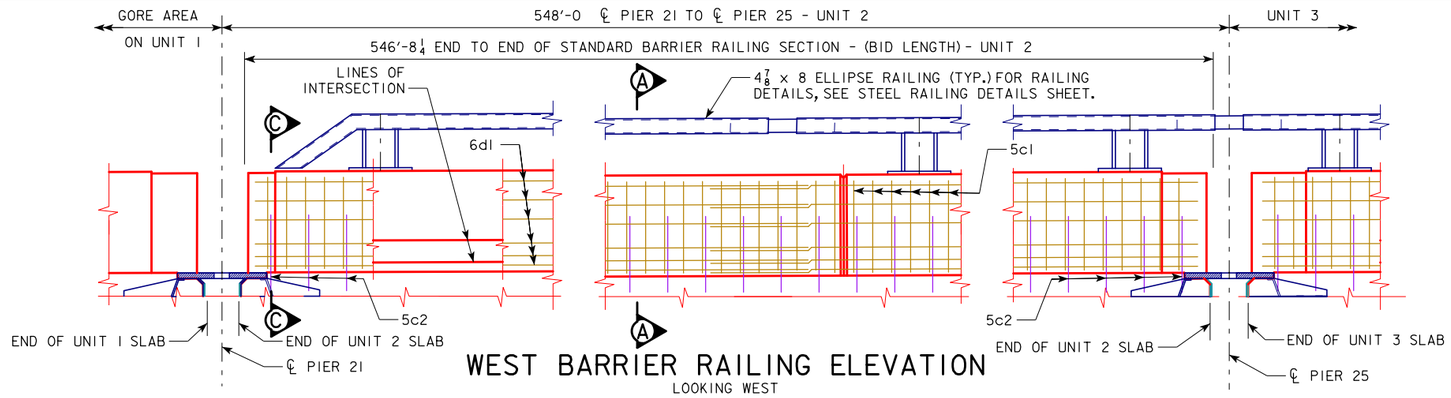

WEST BARRIER RAILING ELEVATION

LOOKING WEST

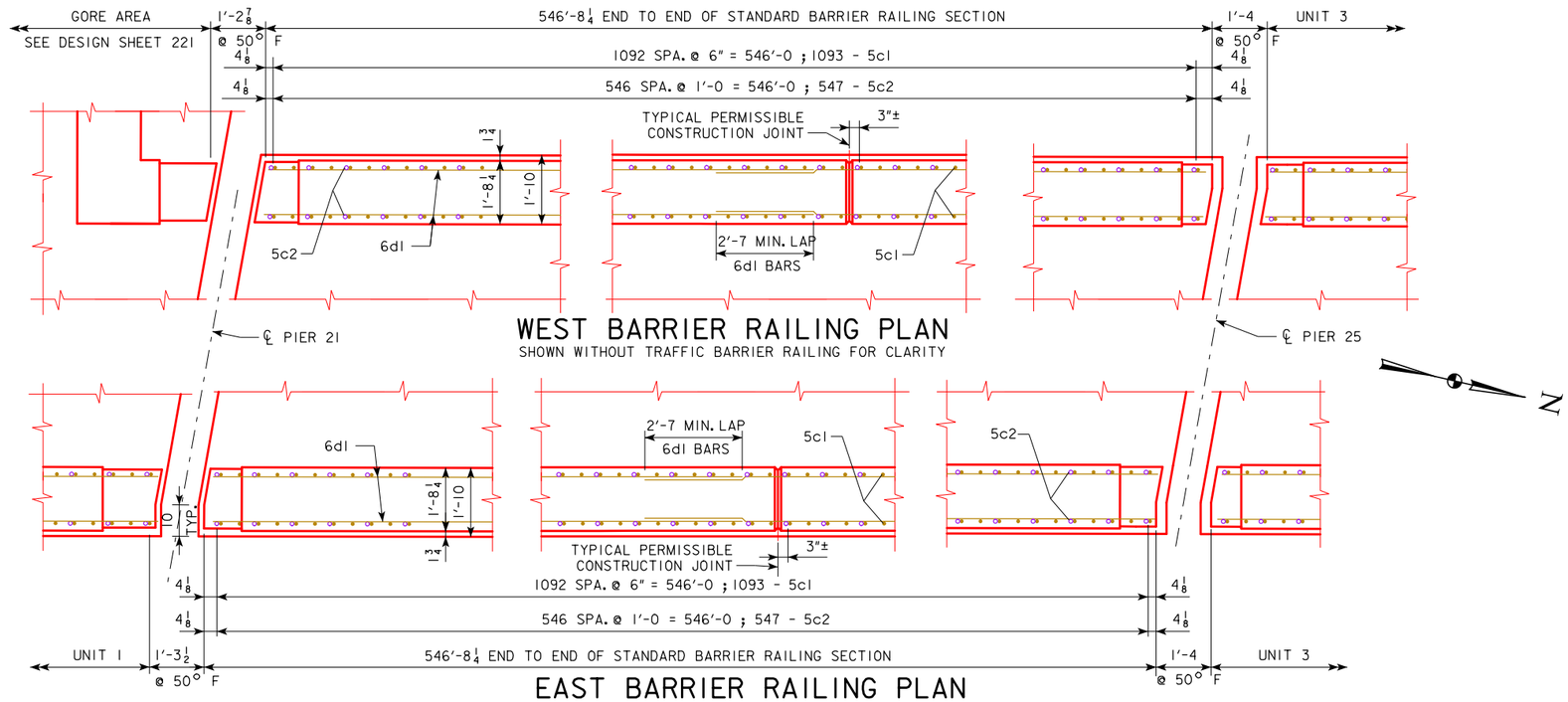

WEST BARRIER RAILING PLAN

SHOWN WITHOUT TRAFFIC BARRIER RAILING FOR CLARITY

EAST BARRIER RAILING PLAN

SHOWN WITHOUT TRAFFIC BARRIER RAILING FOR CLARITY

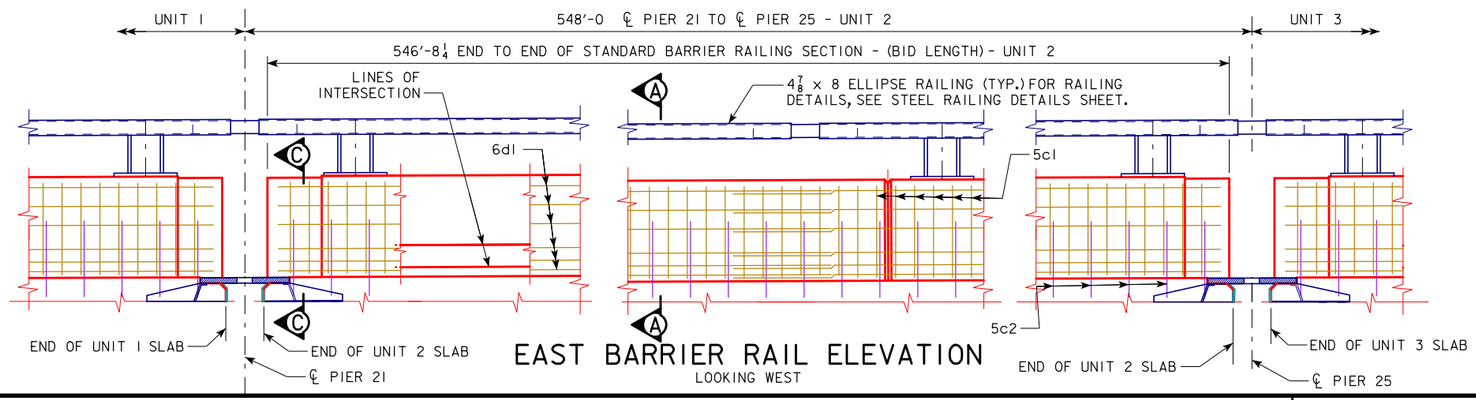

EAST BARRIER RAIL ELEVATION

LOOKING WEST

NOTES:

FINGER JOINTS IN PLAN VIEW AND SLIDING PLATES NOT SHOWN FOR CLARITY.

SEE DESIGN SHEET 215 FOR BARRIER RAILING NOTES, JOINT DETAILS, SECTION A-A AND SECTION C-C.

whks
engineers + planners + land surveyors

DESIGN FOR VARIABLE SKEW (L.A.)

2271'-6 x VARI. CONTINUOUS WELDED GIRDER BRIDGE-EBL W/14' BIKE TRAIL

138'-10 & 151'-0⅞ END SPANS MULTIPLE LENGTH INTERIOR SPANS

BARRIER RAILING DETAILS - UNIT 2

STA. 6792+60.93 - 52' LEFT ℄ I-74 OCTOBER, 2015

SCOTT COUNTY

IOWA DEPARTMENT OF TRANSPORTATION - HIGHWAY DIVISION

DESIGN SHEET NO. 210 OF 282 FILE NO. 30253 DESIGN NO. 3408

DESIGN TEAM JK / LG / RE	SCOTT COUNTY	PROJECT NUMBER BRFIM-074-1(200)5--05-82	SHEET NUMBER 211

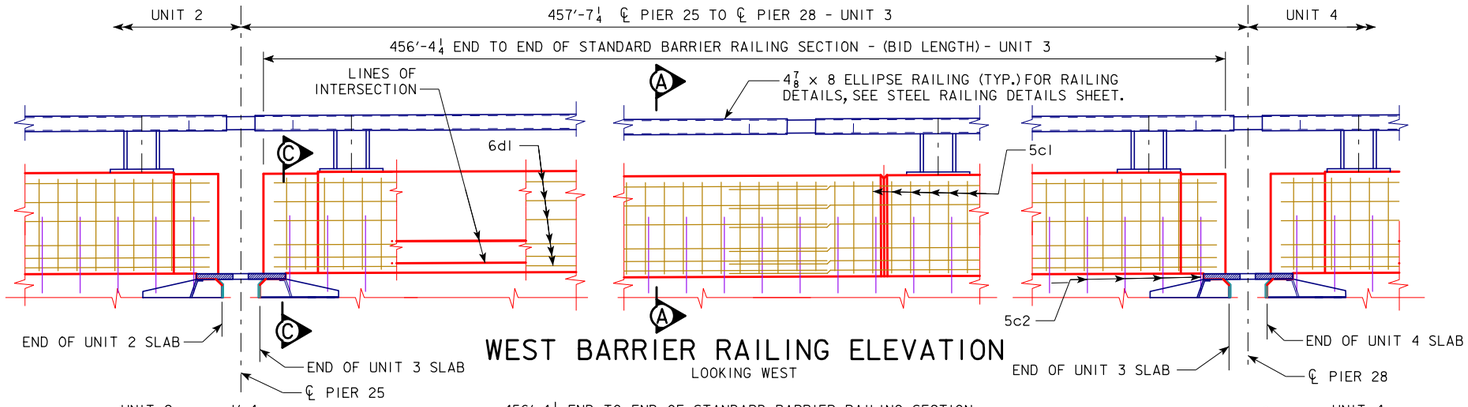

WEST BARRIER RAILING ELEVATION

LOOKING WEST

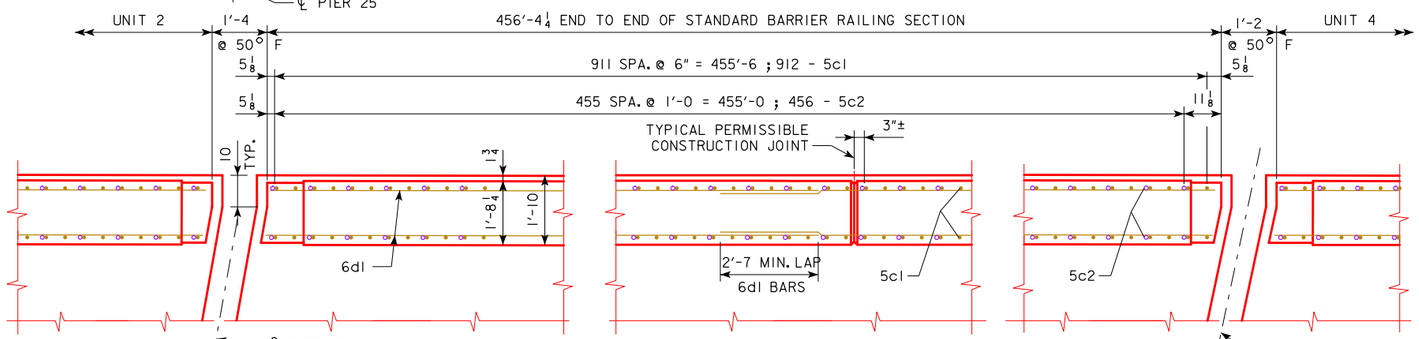

WEST BARRIER RAILING PLAN

SHOWN WITHOUT TRAFFIC BARRIER RAILING FOR CLARITY

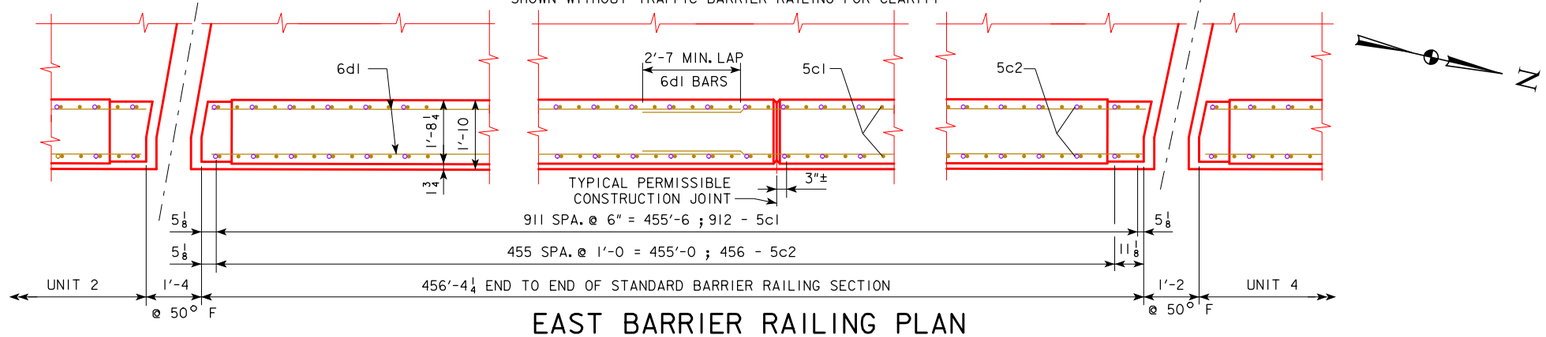

EAST BARRIER RAILING PLAN

SHOWN WITHOUT TRAFFIC BARRIER RAILING FOR CLARITY

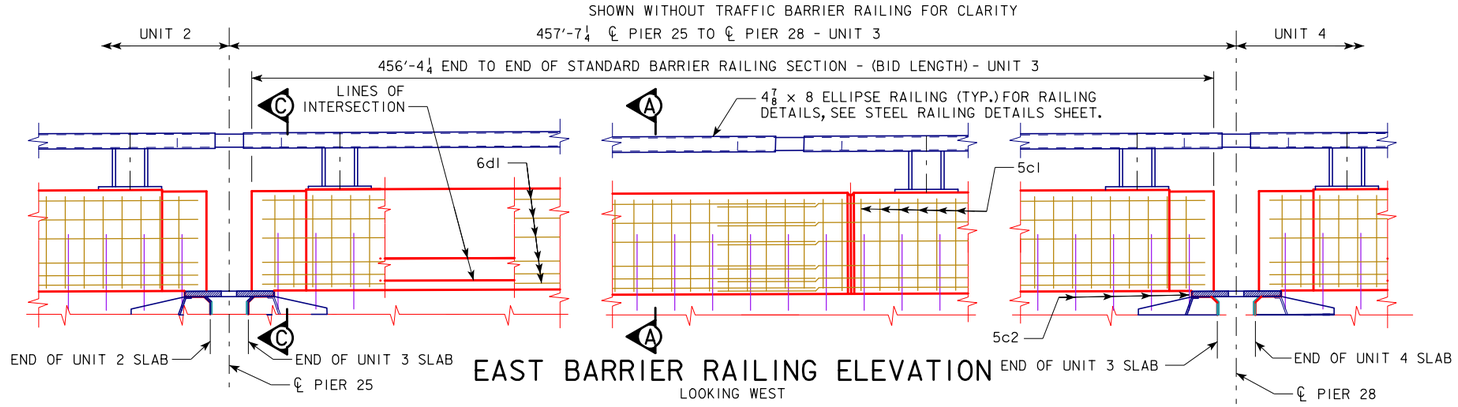

EAST BARRIER RAILING ELEVATION

LOOKING WEST

NOTES:

FINGER JOINTS IN PLAN VIEW AND SLIDING PLATES NOT SHOWN FOR CLARITY.

SEE DESIGN SHEET 215 FOR BARRIER RAILING NOTES, JOINT DETAILS, SECTION A-A AND SECTION C-C.

whks
engineers + planners + land surveyors

DESIGN FOR VARIABLE SKEW (L.A.)

2271'-6 x VARI. CONTINUOUS WELDED GIRDER BRIDGE-EBL W/14' BIKE TRAIL

138'-10 & 151'-0⅞ END SPANS MULTIPLE LENGTH INTERIOR SPANS

BARRIER RAILING DETAILS - UNIT 3

STA. 6792+60.93 - 52' LEFT ℄ I-74 OCTOBER, 2015

SCOTT COUNTY

IOWA DEPARTMENT OF TRANSPORTATION - HIGHWAY DIVISION

DESIGN SHEET NO. 211 OF 282 FILE NO. 30253 DESIGN NO. 3408

DESIGN TEAM JK / LG / RE	SCOTT COUNTY	PROJECT NUMBER BRFIM-074-1(200)5--05-82	SHEET NUMBER 212

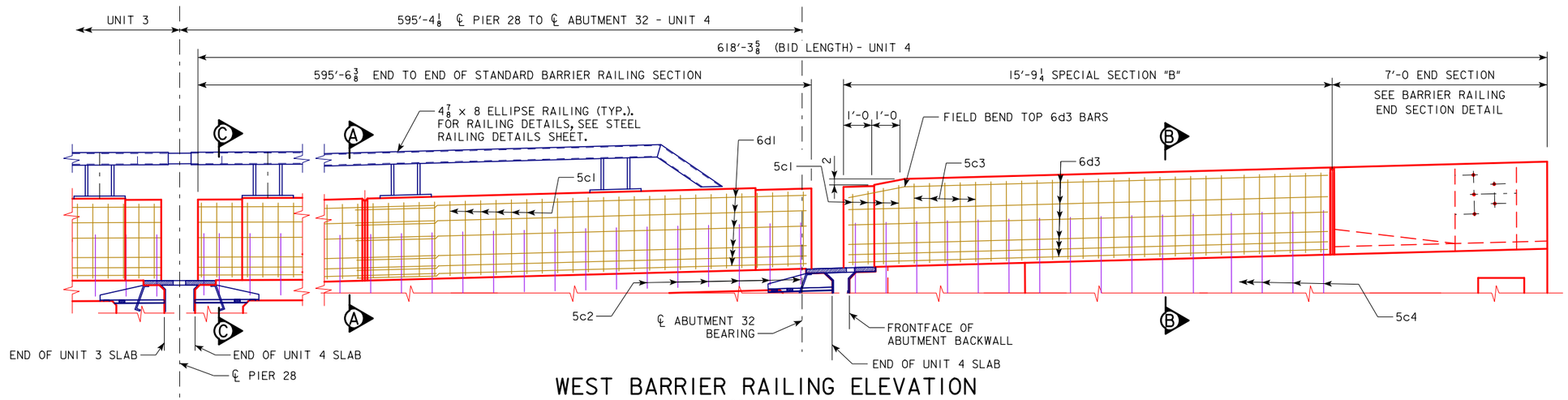

WEST BARRIER RAILING ELEVATION

LOOKING WEST

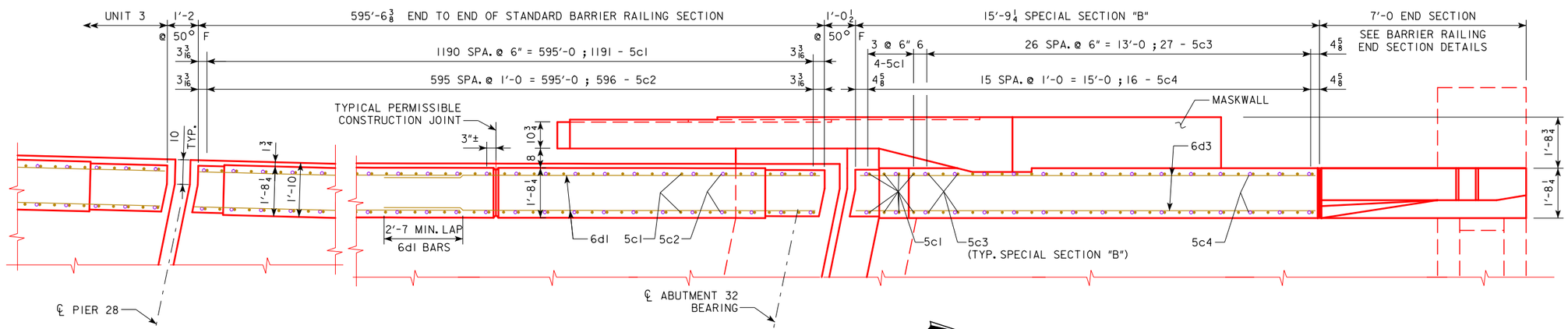

WEST BARRIER RAILING PLAN

SHOWN WITHOUT TRAFFIC BARRIER RAILING FOR CLARITY

NOTES:

FINGER JOINTS IN PLAN VIEW AND SLIDING PLATES NOT SHOWN FOR CLARITY.

SEE DESIGN SHEET 215 FOR BARRIER RAILING NOTES, JOINT DETAILS, SECTION A-A, SECTION B-B AND SECTION C-C.

whks
engineers + planners + land surveyors

DESIGN FOR VARIABLE SKEW (L.A.)

227'-6 x VARI. CONTINUOUS WELDED GIRDER BRIDGE-EBL W/14' BIKE TRAIL

138'-10 & 151'-0 7/8 END SPANS MULTIPLE LENGTH INTERIOR SPANS

WEST BARRIER RAILING DTLS.-UNIT 4

STA. 6792+60.93 - 52' LEFT ℄ I-74 OCTOBER, 2015

SCOTT COUNTY

IOWA DEPARTMENT OF TRANSPORTATION - HIGHWAY DIVISION

DESIGN SHEET NO. 212 OF 282 FILE NO. 30253 DESIGN NO. 3408

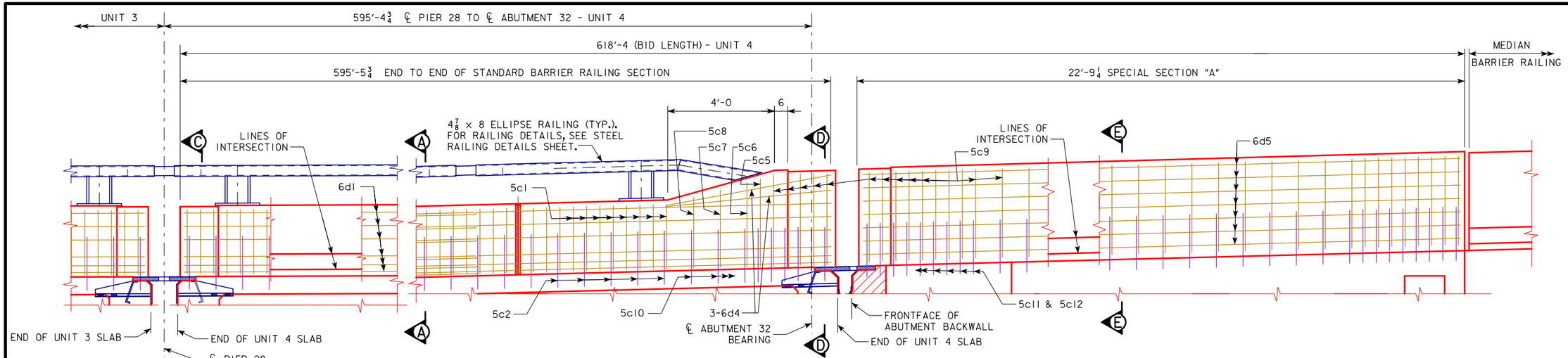

EAST BARRIER RAILING ELEVATION

LOOKING WEST
MASKWALL NOT SHOWN FOR CLARITY

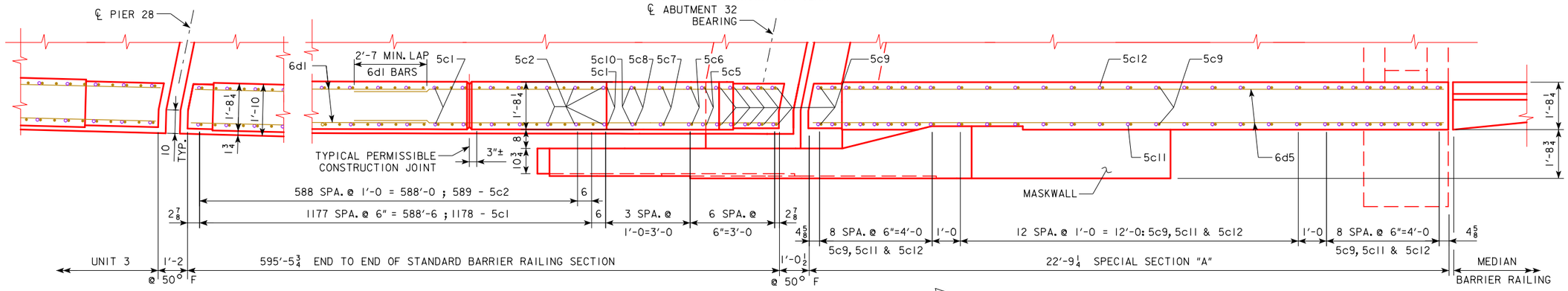

EAST BARRIER RAILING PLAN

SHOWN WITHOUT TRAFFIC BARRIER RAILING FOR CLARITY

* DENOTES THE MAXIMUM VALUE FOR THIS DIMENSION. THIS DIMENSION MAY VARY DUE TO CONSTRUCTION INACCURACIES.

CROSS SECTIONAL AREA OF THE SPECIAL SECTION 'A' OF THE BARRIER RAIL = 4.33 SQUARE FEET.

** CONTRACTOR TO PROVIDE SUPPORT FOR CONDUIT AS REQUIRED TO MAINTAIN 1½" CLEARANCE FROM STAINLESS STEEL REINFORCING.

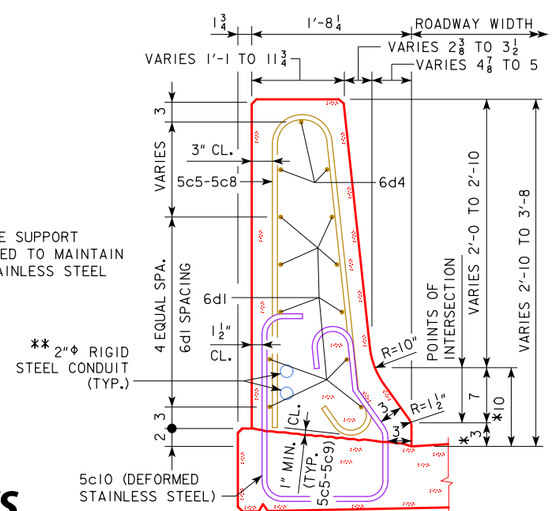

PART SECTION D-D

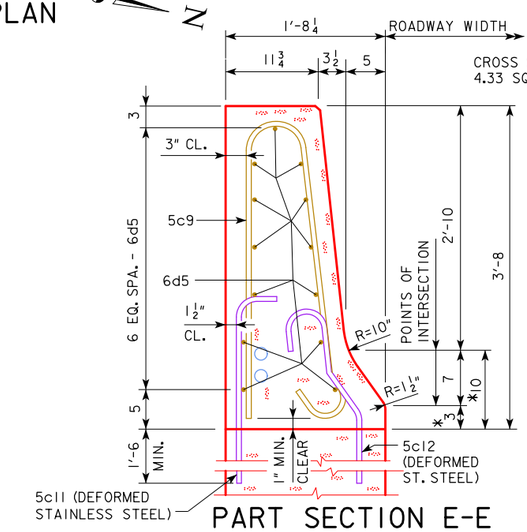

PART SECTION E-E

NOTES:

FINGER JOINTS IN PLAN VIEW AND SLIDING PLATES NOT SHOWN FOR CLARITY.

SEE DESIGN SHEET 215 FOR BARRIER RAILING NOTES, JOINT DETAILS AND SECTION A-A AND SECTION C-C.

SEE DESIGN SHEETS 225 TO 229 FOR CONDUIT DETAILS.

whks
engineers + planners + land surveyors

DESIGN FOR VARIABLE SKEW (L.A.)

227'-6 x VARI. CONTINUOUS WELDED GIRDER BRIDGE-EBL W/14' BIKE TRAIL

138'-10 & 151'-0⅞ END SPANS MULTIPLE LENGTH INTERIOR SPANS

EAST BARRIER RAILING DTLS.-UNIT 4

STA. 6792+60.93 - 52' LEFT ℄ I-74 OCTOBER, 2015

SCOTT COUNTY

IOWA DEPARTMENT OF TRANSPORTATION - HIGHWAY DIVISION

DESIGN SHEET NO. 213 OF 282 FILE NO. 30253 DESIGN NO. 3408

DESIGN TEAM JK / LG / RE	SCOTT COUNTY	PROJECT NUMBER BRFIM-074-1(200)5--05-82	SHEET NUMBER 214

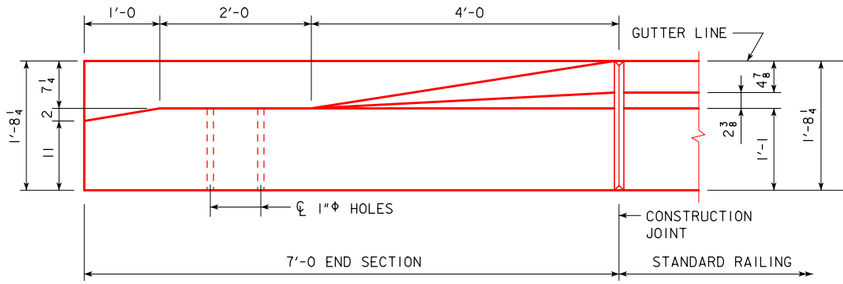

PART PLAN VIEW

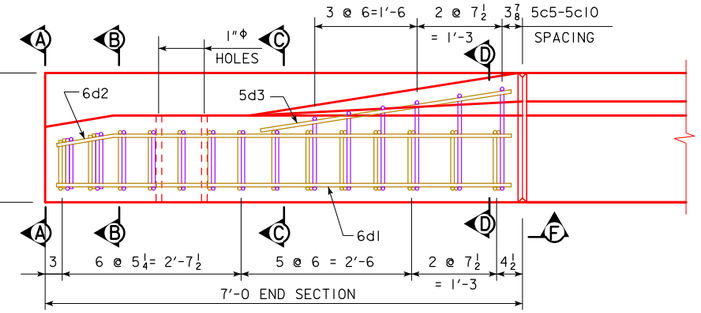

PART VIEW E-E

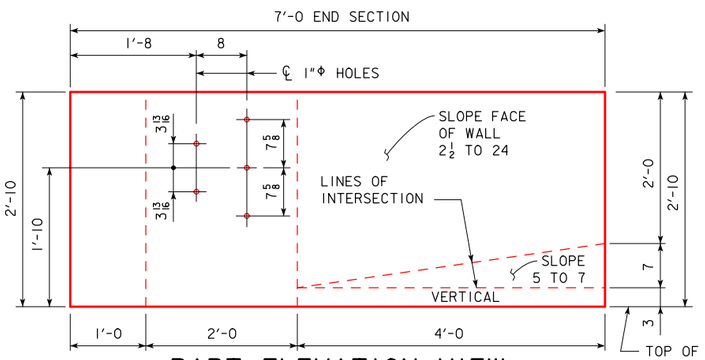

PART ELEVATION VIEW

BACKFACE VIEW

PROVIDE 5 HOLES FORMED WITH 1"Φ PLASTIC CONDUIT. COST TO BE INCLUDED IN PRICE BID FOR CONCRETE BARRIER RAILING.

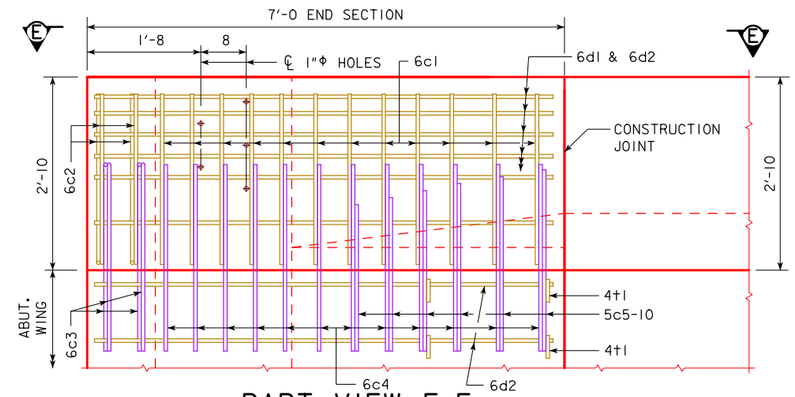

PART VIEW F-F

BACKFACE VIEW

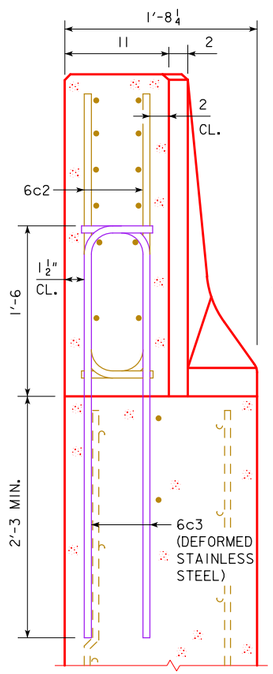

VIEW A-A

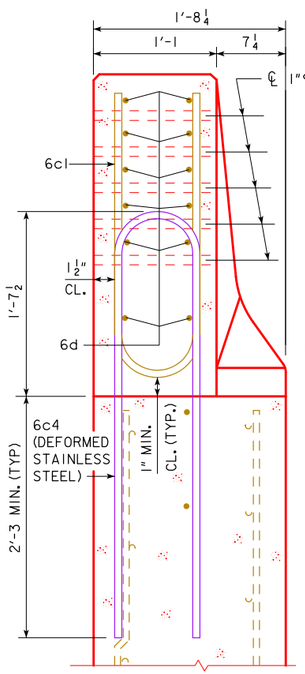

SECTION B-B

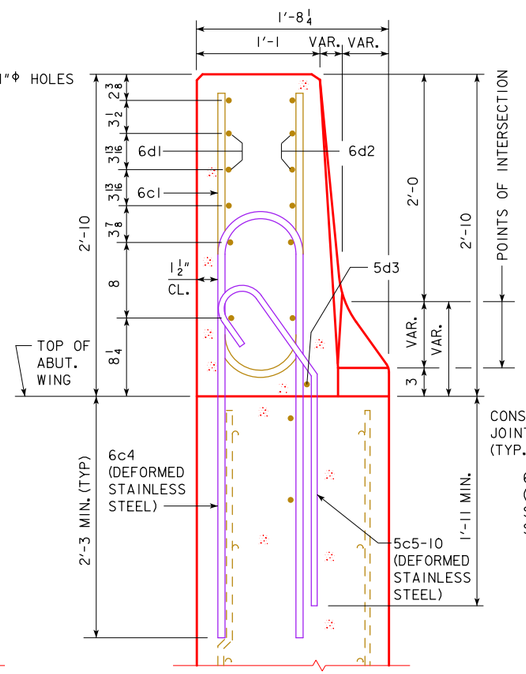

SECTION C-C

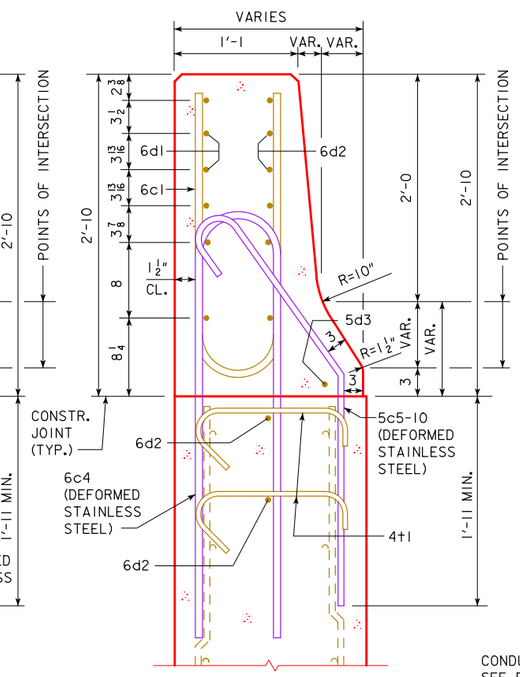

SECTION D-D

EPOXY REINFORCING STEEL - ONE END SECTION

BAR	LOCATION	SHAPE	NO.	LENGTH	WEIGHT
6c1-4	VERTICAL		12	5'-9	104
6c2-4	VERTICAL		4	3'-1	19
6d1-4	HORIZONTAL		6	6'-8	60
6d2-4	HORIZONTAL		8	6'-9	81
5d3-4	HORIZONTAL		1	3'-9	4
4+1-4	ABUTMENT WING TIE BARS		4	2'-3	6
(INCLUDE WITH UNIT 4 BARRIER REINFORCING)			TOTAL WT. (LBS.)		274

STAINLESS STEEL REINF.-ONE END SECTION

BAR	LOCATION	SHAPE	NO.	LENGTH	WEIGHT
6c3-4	VERTICAL		4	4'-4	26
6c4-4	VERTICAL		12	8'-6	153
5c5-10-4	VERTICAL		6	VARIES	26
(INCLUDE WITH UNIT 4 BARRIER STAINLESS STEEL REINF.)			TOTAL WT. (LBS.)		205

CONCRETE PLACEMENT SUMMARY

SECTION	TOTAL
BARRIER RAILING ONE END SECTION	0.8 CU. YD.

BENT BAR DETAILS

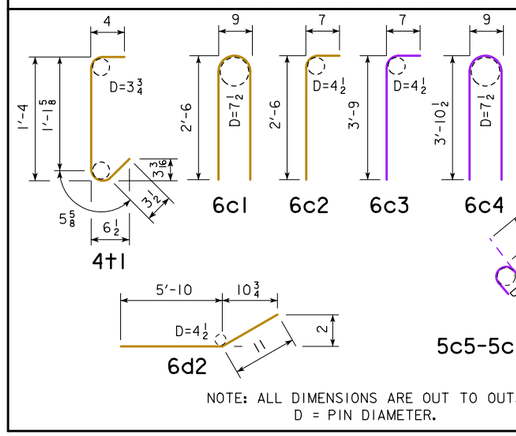

BAR	"X"
5c5	1'-0 3/4
5c6	1'-2 3/4
5c7	1'-4 1/2
5c8	1'-6
5c9	1'-7 3/4
5c10	1'-9 3/4

NOTE: ALL DIMENSIONS ARE OUT TO OUT.
D = PIN DIAMETER.

NOTES:

4+1 PLACEMENT- 2 BARS EACH LEVEL OF 6d2 IN WING FOOTING.

CONSTRUCTION JOINT BETWEEN TOP OF WING AND BARRIER RAILING IS ROUGHENED CONCRETE.

THE 10" RADIUS AND 1 1/2" RADIUS ARE TYPICAL AND SHALL BE USED WHEN CONSTRUCTING THE CORNERS FOR VIEW A-A, SECTION B-B, SECTION C-C AND SECTION D-D.

THE 6c4, 6c3, 5c5-10, 2 - 6d2 AND 4+1 BARS ARE TO BE PLACED WITH THE ABUTMENT WING. THE DETAILS FOR PLACEMENT ARE SHOWN ON THE WING ABUTMENT SHEET.

DASHED LINES BELOW THE TOP OF WING ARE THE ABUTMENT WING REINFORCING STEEL. SEE WING ABUTMENT SHEET FOR PLACEMENT.

DESIGNATION "-4" SIGNIFIES BAR ASSOCIATED WITH THE UNIT 4 BRIDGE. "-4" NOT SHOWN IN DETAILS FOR CLARITY.

CONDUIT IN END SECTION NOT SHOWN.
SEE DES. SHT. 225 FOR LOCATION.

DESIGN FOR VARIABLE SKEW (L.A.)

2271'-6 x VARI. CONTINUOUS WELDED GIRDER BRIDGE-EBL W/14' BIKE TRAIL

138'-10 & 151'-0 7/8 END SPANS MULTIPLE LENGTH INTERIOR SPANS

W. BARR. RAILING END SECTION-UNIT 4

STA. 6792+60.93 - 52' LEFT ℄ I-74 OCTOBER, 2015

SCOTT COUNTY

IOWA DEPARTMENT OF TRANSPORTATION - HIGHWAY DIVISION

DESIGN SHEET NO. 214 OF 282 FILE NO. 30253 DESIGN NO. 3408

REVISION 02-08 - REINFORCING STEEL PATTERN & SIZE CHANGED AND WEIGHT ADJUSTED. CONCRETE THICKNESS WAS INCREASED 1/2" AND QUANTITY ADJUSTED.
ENGLISHDECKRAILBRIDGES.DGN 1017 - THIS SHEET ISSUED 09-01

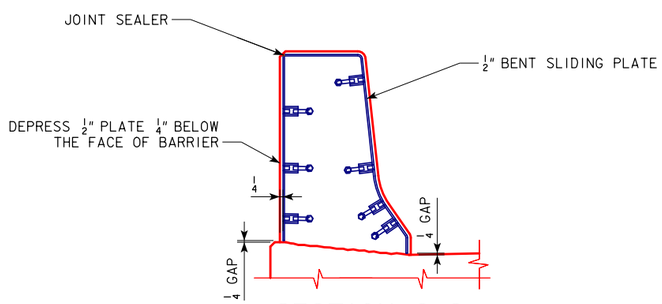

SECTION C-C

SHOWN WITHOUT TRAFFIC BARRIER RAILING FOR CLARITY

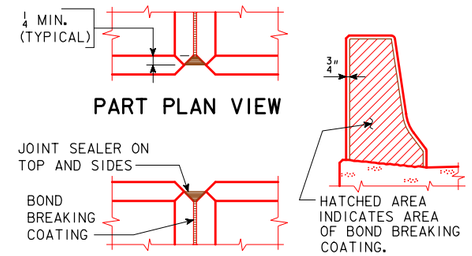

BARRIER RAILING JOINT DETAILS

NOTE:

SEE FINGER JOINT DETAIL SHEETS FOR SLIDING PLATE DETAILS.

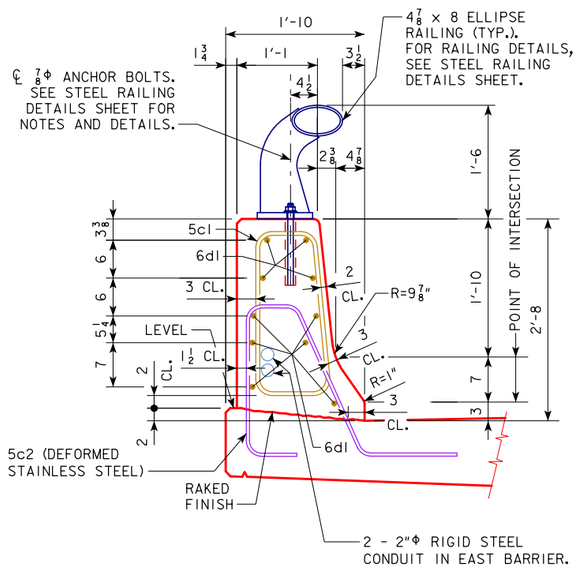

SECTION A-A

NOTE:

CONDUIT SHOWN MAY NOT BE PRESENT IN ALL SECTIONS.

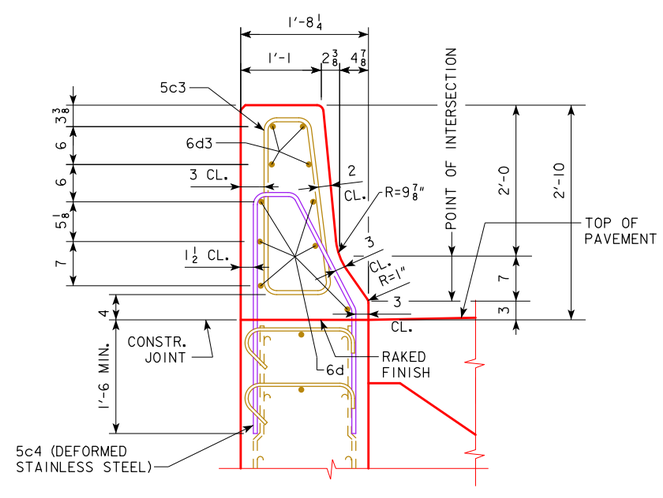

SECTION B-B

BARRIER RAILING NOTES:

MINIMUM CLEAR DISTANCE FROM FACE OF CONCRETE TO NEAR REINFORCING BAR IS TO BE 2" UNLESS OTHERWISE NOTED OR SHOWN.

THE PERMISSIBLE CONSTRUCTION JOINTS ARE TO BE PLACED BETWEEN VERTICAL BARS AT A MINIMUM SPACING OF 20 FEET. CONSTRUCTION JOINT CONTACT SURFACES ARE TO BE COATED WITH AN APPROVED BOND BREAKER. COST OF THE JOINT SEALER AND BOND BREAKER SHALL BE CONSIDERED INCIDENTAL TO OTHER CONSTRUCTION.

CONCRETE BARRIER RAILINGS PLACED USING THE SLIPFORM METHOD WILL REQUIRE THE USE OF A CLASS BR CONCRETE IN ACCORDANCE WITH ARTICLE 2513.03, A, 2, OF THE STANDARD SPECIFICATIONS. CAST-IN-PLACE BARRIER RAILINGS SHALL USE HIGH PERFORMANCE CONCRETE. CLASS D CONCRETE IS NOT PERMITTED FOR CONCRETE BARRIER RAILINGS (CAST-IN-PLACE OR SLIPFORMED METHOD).

THE CONCRETE BARRIER RAILING IS TO BE BID ON A LINEAL FOOT BASIS MEASURED FROM END TO END OF RAILING. THE NUMBER OF LINEAL FEET OF BARRIER RAILING INSTALLED WILL BE PAID FOR AT THE CONTRACT PRICE PER LINEAL FOOT BASED ON PLAN QUANTITIES. PRICE BID FOR "CONCRETE BARRIER RAILING" SHALL BE FULL COMPENSATION FOR FURNISHING ALL MATERIAL, EXCLUDING REINFORCING STEEL, AND ALL OF THE EQUIPMENT AND LABOR REQUIRED TO ERECT THE RAILING IN ACCORDANCE WITH THESE PLANS AND CURRENT SPECIFICATIONS.

COSTS ASSOCIATED WITH MATERIAL AND INSTALLATION OF CONDUIT, JUNCTION BOXES, FITTINGS, AND SUPPORT HARDWARE SHALL BE CONSIDERED INCIDENTAL TO THE BID ITEMS: "STRUCTURAL CONCRETE (BRIDGE)", "HIGH PERFORMANCE STRUCTURAL CONCRETE", "CONCRETE BARRIER RAILING", AND "HP SELF-CONSOLIDATING CONCRETE (HP-SCC)" AS OUTLINED IN THE BID ITEM REFERENCE INFORMATION ON DESIGN SHEET 2.

ALL BARRIER RAILING REINFORCING STEEL IS TO BE INCLUDED WITH THE SUPERSTRUCTURE REINFORCING STEEL.

THE JOINT SEALER SHALL BE LIGHT GRAY NONSAG LATEX CAULKING SEALER MARKETED FOR OUTDOOR USE. NO TESTING OR CERTIFICATION IS REQUIRED.

TOP OF THE BARRIER RAILING IS TO BE PARALLEL TO THE THEORETICAL GRADE.

PLACE POST AND POST ANCHOR BOLTS NORMAL TO GRADE AND RAILINGS PARALLEL TO GRADE.

ON THE NON-TRAFFIC SIDE OF THE BARRIER RAILING, PLACE THE 5c1/5c3/5c5-5c9 BARS WITH A 3" CLEARANCE AND THE 5c2/5c4/5c10/5c11 BARS WITH A 1 1/2" CLEARANCE TO PROVIDE ADEQUATE SPACE BETWEEN THE STEEL CONDUIT AND THE STAINLESS STEEL 5c2/5c4/5c10/5c11 BARS TO MEET THE REQUIREMENTS OF I.M. 452.

NOTE THAT SOME OF THE 6d1 AND 6d4 BARS ARE TO BE PLACED OUTSIDE OF THE 5c1/5c3/5c5-5c9 BARS, BETWEEN THE 5c1/5c3/5c5-5c9 BARS AND THE 5c2/5c4/5c10/5c11 BARS, AS SHOWN IN THE DETAILS.

THE STEEL CONDUIT SHALL BE SECURELY TIED AT EVERY 3'-0 INTERSECTION WITH THE 5c1/5c3/5c5-5c9 BARS TO AVOID CONTACT WITH THE STAINLESS STEEL 5c2/5c4/5c10/5c11 BARS.

THIS BARRIER MEETS THE REQUIREMENTS OF TEST LEVEL 5 (TL-5).

FOR RIGID STEEL CONDUIT DETAILS, SEE DESIGN SHEETS 225 THRU 228.

SEE DESIGN SHEETS 262 THRU 267 FOR BARRIER RAILING COVER PLATE DETAILS.

ALL BARRIER RAILING STEEL IS TO BE EPOXY COATED UNLESS OTHERWISE NOTED OR SHOWN.

CROSS SECTIONAL AREA OF THE 2'-8 SECTION OF THE BARRIER RAILING = 3.3 SQUARE FEET EXCEPT AT THE 4'-0 SLOPED END OF THE EAST RAILING AT ABUTMENT 32.

CROSS SECTIONAL AREA OF UNIT 4 SPECIAL SECTION B = 3.5 SQUARE FEET EXCEPT AT THE 2'-0 END NEAR THE JOINT

SEE DESIGN SHEET 213 FOR CROSS SECTIONAL AREA OF THE 3'-8 SECTION OF THE BARRIER RAILING.

SEE DESIGN SHEET 202 AND 210 THRU 213 FOR LOCATION OF SECTIONS A-A AND C-C.

SEE DESIGN SHEET 212 FOR LOCATION OF SECTION B-B.

whks
engineers + planners + land surveyors

DESIGN FOR VARIABLE SKEW (L.A.)

227'-6 x VARI. CONTINUOUS WELDED GIRDER BRIDGE-EBL W/14' BIKE TRAIL

138'-10 & 151'-0 7/8 END SPANS MULTIPLE LENGTH INTERIOR SPANS

BARRIER RAILING DETAILS & NOTES

STA. 6792+60.93 - 52' LEFT ℄ I-74 OCTOBER, 2015

SCOTT COUNTY

IOWA DEPARTMENT OF TRANSPORTATION - HIGHWAY DIVISION

DESIGN SHEET NO. 215 OF 282 FILE NO. 30253 DESIGN NO. 3408

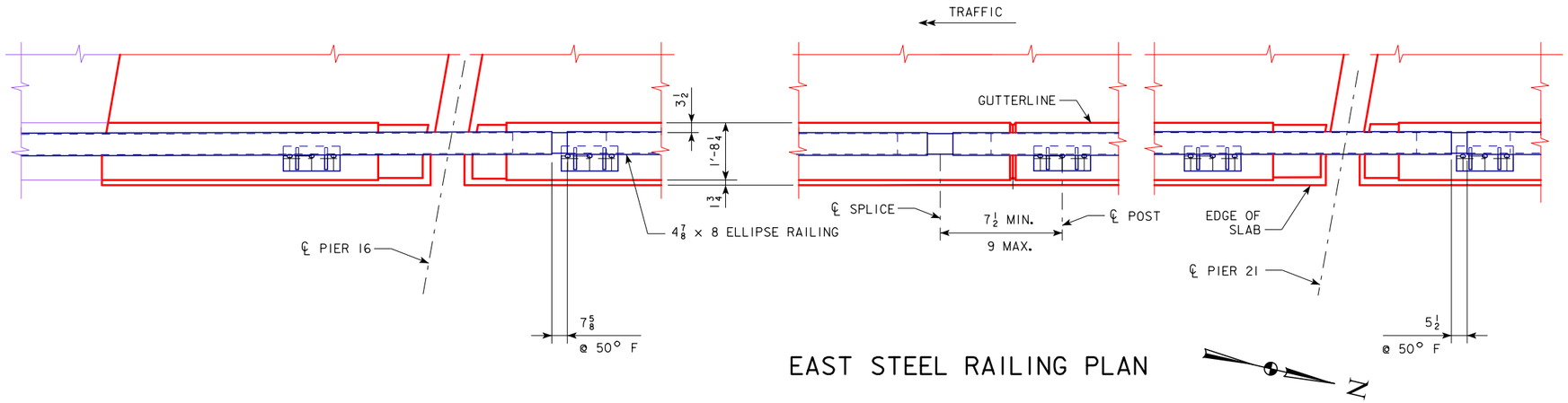

EAST STEEL RAILING PLAN

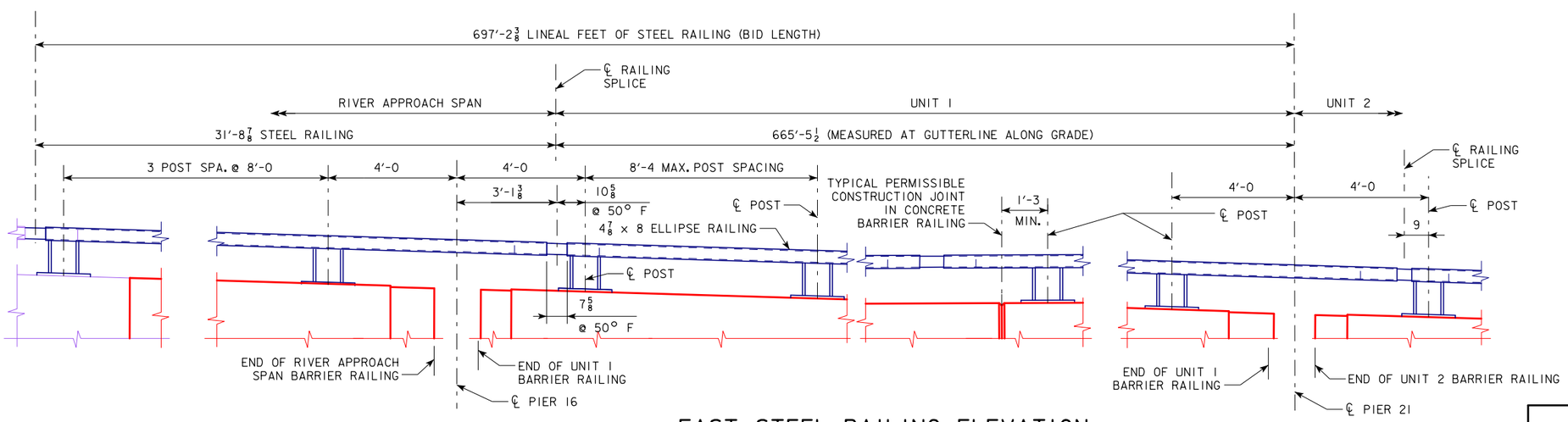

EAST STEEL RAILING ELEVATION

LOOKING WEST

NOTES:

FINGER JOINTS AND SLIDING PLATES NOT SHOWN FOR CLARITY.

SEE DESIGN SHEET 221 FOR RAILING, POSTS AND SPLICE DETAILS

whks
engineers + planners + land surveyors

DESIGN FOR VARIABLE SKEW (L.A.)

2271'-6 x VARI. CONTINUOUS WELDED GIRDER BRIDGE-EBL W/14' BIKE TRAIL

138'-10 & 151'-0 7/8 END SPANS MULTIPLE LENGTH INTERIOR SPANS

STEEL RAILING DETAILS - UNIT 1

STA. 6792+60.93 - 52' LEFT ℄ I-74 OCTOBER, 2015

SCOTT COUNTY

IOWA DEPARTMENT OF TRANSPORTATION - HIGHWAY DIVISION

DESIGN SHEET NO. 216 OF 282 FILE NO. 30253 DESIGN NO. 3408

DESIGN TEAM JK / LG / RE	SCOTT COUNTY	PROJECT NUMBER BRFIM-074-1(200)5--05-82	SHEET NUMBER 217

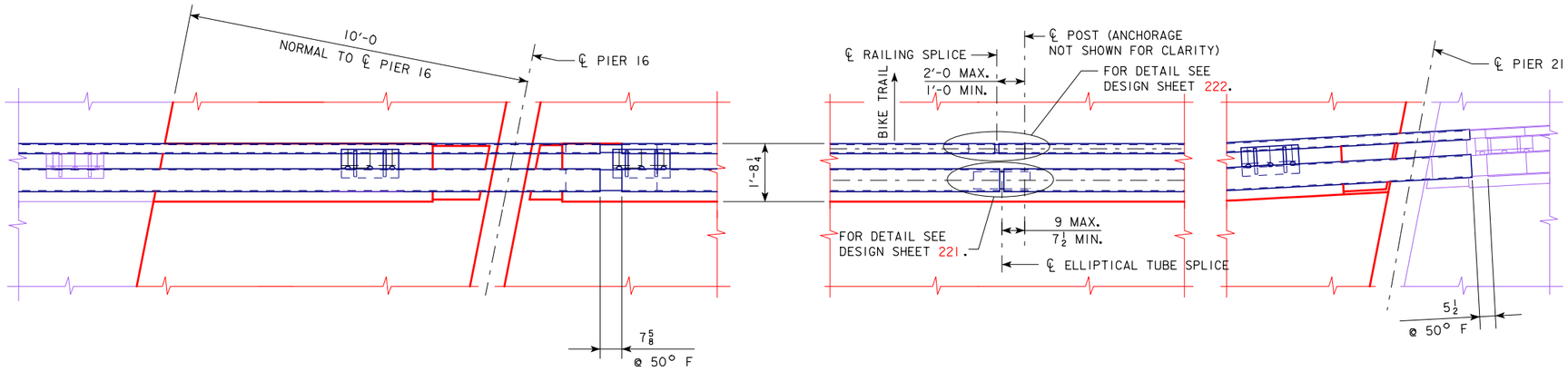

SEPARATION STEEL RAILING PLAN

N

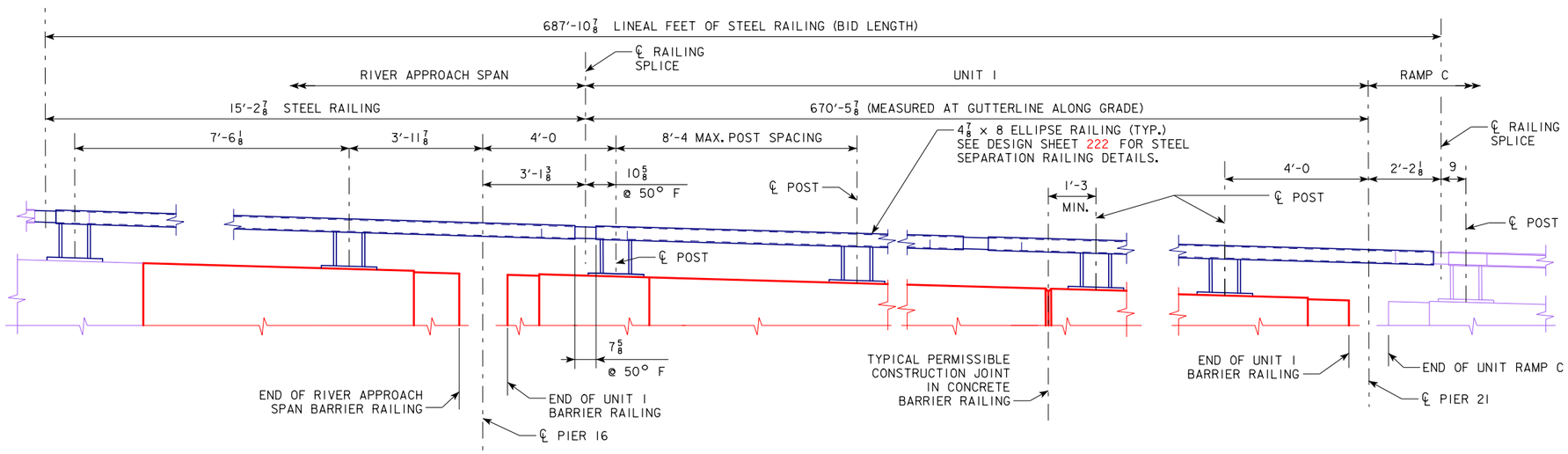

SEPARATION STEEL RAILING ELEVATION

LOOKING WEST

NOTES:

FINGER JOINTS IN PLAN VIEW AND SLIDING PLATES NOT SHOWN FOR CLARITY.

SEE DESIGN SHEET 222 FOR STEEL SEPARATION RAILING, POSTS, AND SPLICE DETAILS.

whks
engineers + planners + land surveyors

DESIGN FOR VARIABLE SKEW (L.A.)

2271'-6 x VARI. CONTINUOUS WELDED GIRDER BRIDGE-EBL W/14' BIKE TRAIL

138'-10 & 151'-0 7/8 END SPANS MULTIPLE LENGTH INTERIOR SPANS

SEP. STEEL RAILING DETAILS-UNIT 1

STA. 6792+60.93 - 52' LEFT ℄ I-74 OCTOBER, 2015

SCOTT COUNTY

IOWA DEPARTMENT OF TRANSPORTATION - HIGHWAY DIVISION

DESIGN SHEET NO. 217 OF 282 FILE NO. 30253 DESIGN NO. 3408

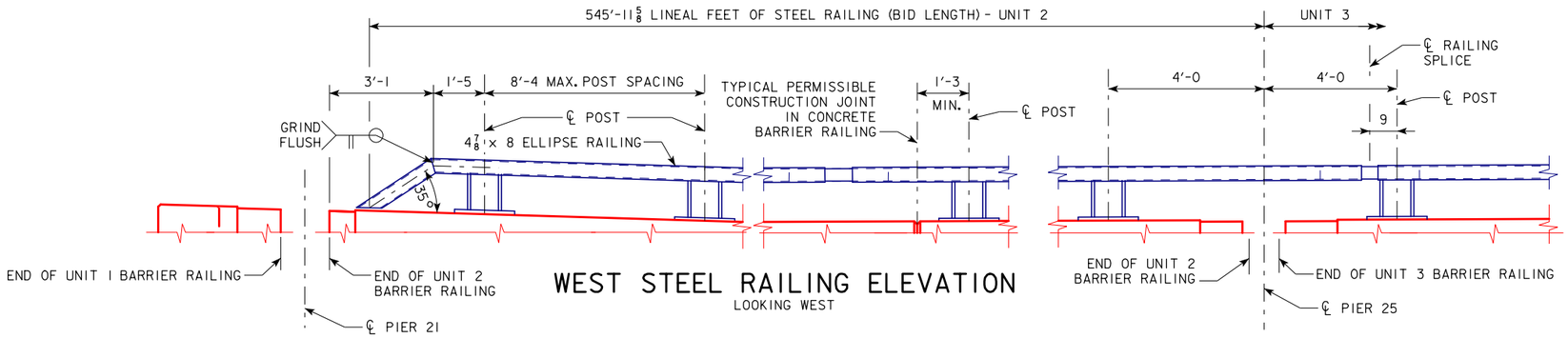

WEST STEEL RAILING ELEVATION

LOOKING WEST

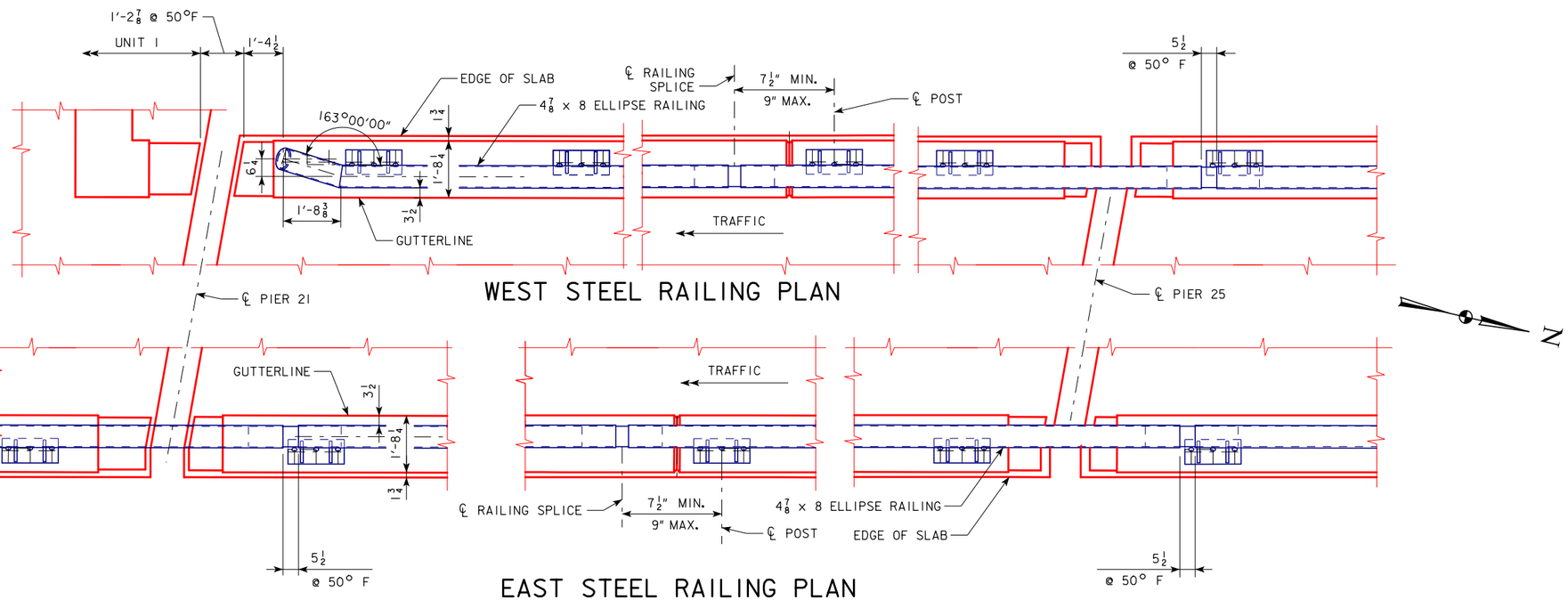

WEST STEEL RAILING PLAN

EAST STEEL RAILING PLAN

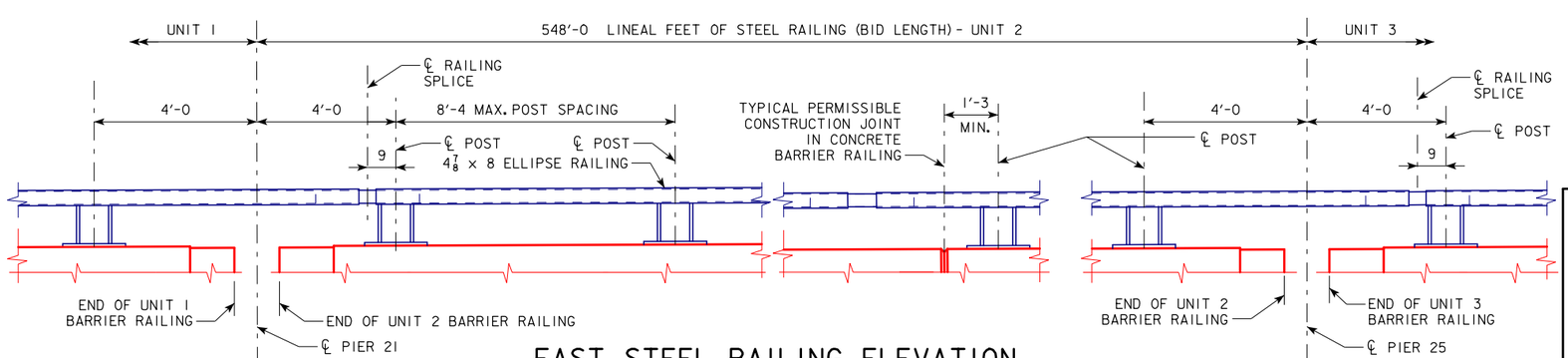

EAST STEEL RAILING ELEVATION

LOOKING WEST

NOTES:

FINGER JOINTS AND SLIDING PLATES NOT SHOWN FOR CLARITY.

SEE DESIGN SHEET 221 FOR RAILING, POSTS AND SPLICE DETAILS.

whks
engineers + planners + land surveyors

DESIGN FOR VARIABLE SKEW (L.A.)

2271'-6 x VARI. CONTINUOUS WELDED GIRDER BRIDGE-EBL W/14' BIKE TRAIL

138'-10 & 151'-0 7/8 END SPANS MULTIPLE LENGTH INTERIOR SPANS

STEEL RAILING DETAILS - UNIT 2

STA. 6792+60.93 - 52' LEFT ℄ I-74 OCTOBER, 2015

SCOTT COUNTY

IOWA DEPARTMENT OF TRANSPORTATION - HIGHWAY DIVISION

DESIGN SHEET NO. 218 OF 282 FILE NO. 30253 DESIGN NO. 3408

DESIGN TEAM JK / LG / RE	SCOTT COUNTY	PROJECT NUMBER BRFIM-074-1(200)5--05-82	SHEET NUMBER 219

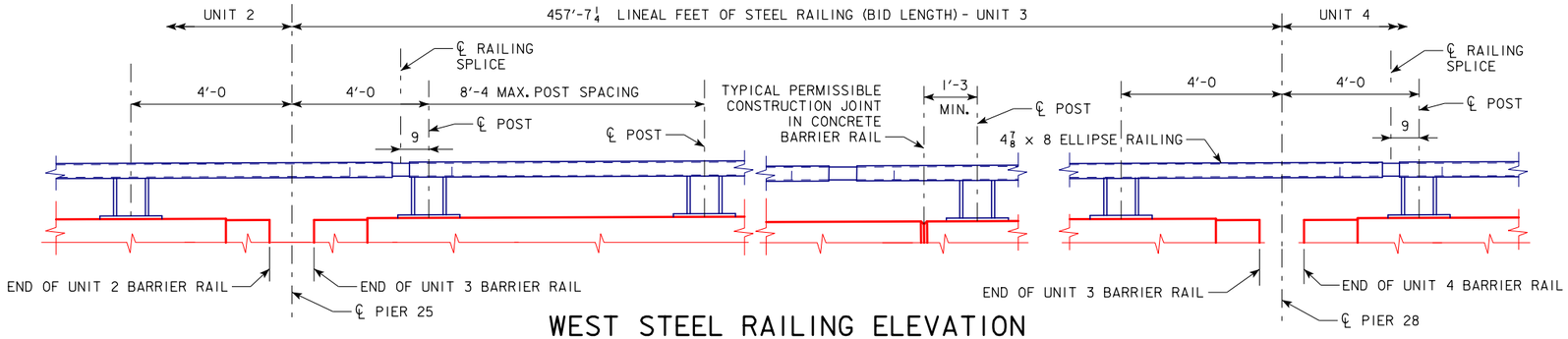

WEST STEEL RAILING ELEVATION
LOOKING WEST

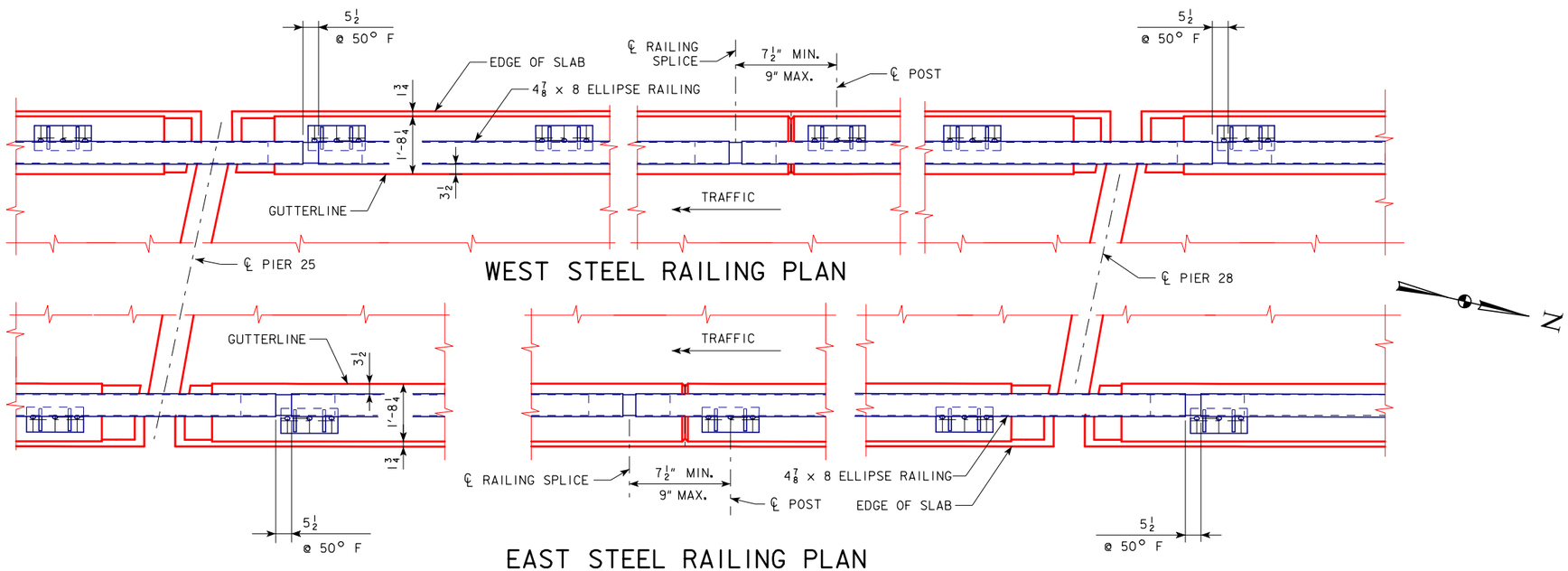

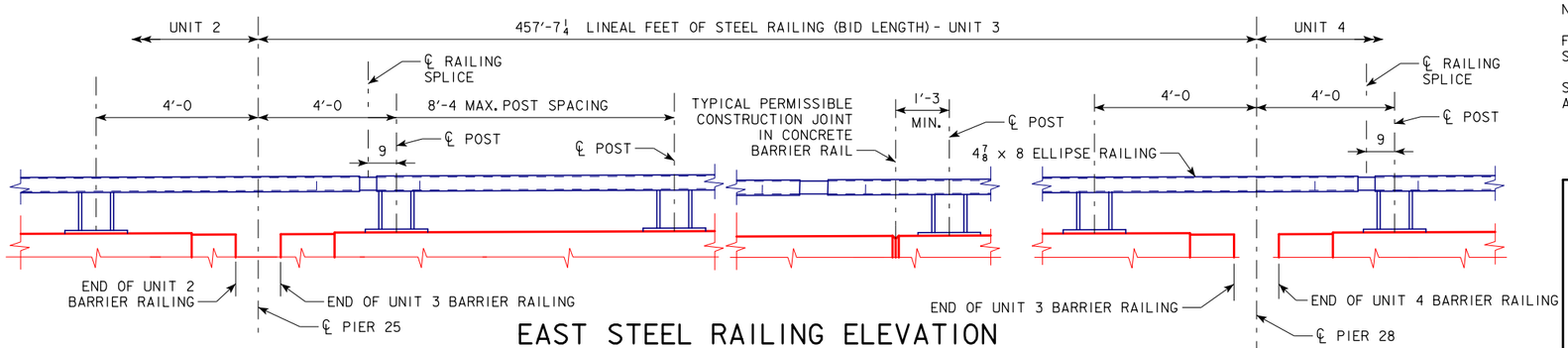

EAST STEEL RAILING ELEVATION
LOOKING WEST

NOTES:

FINGER JOINTS AND SLIDING PLATES NOT SHOWN FOR CLARITY.

SEE DESIGN SHEET 221 FOR RAILING, POSTS AND SPLICE DETAILS.

whks
engineers + planners + land surveyors

DESIGN FOR VARIABLE SKEW (L.A.)

2271'-6 x VARI. CONTINUOUS WELDED GIRDER BRIDGE-EBL W/14' BIKE TRAIL

138'-10 & 151'-0 7/8 END SPANS MULTIPLE LENGTH INTERIOR SPANS

STEEL RAILING DETAILS - UNIT 3

STA. 6792+60.93 - 52' LEFT ℄ I-74 OCTOBER, 2015

SCOTT COUNTY

IOWA DEPARTMENT OF TRANSPORTATION - HIGHWAY DIVISION

DESIGN SHEET NO. 219 OF 282 FILE NO. 30253 DESIGN NO. 3408

DESIGN TEAM JK / LG / RE	SCOTT COUNTY	PROJECT NUMBER BRFIM-074-1(200)5--05-82	SHEET NUMBER 220

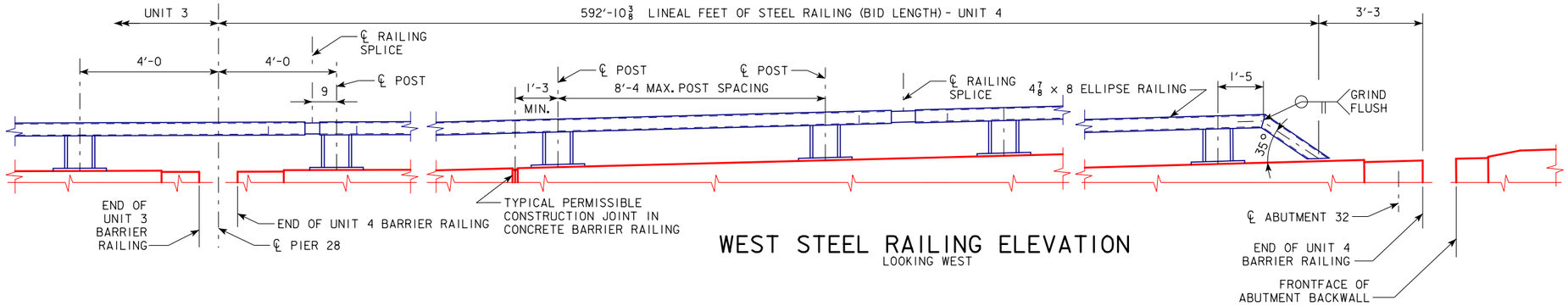

WEST STEEL RAILING ELEVATION
LOOKING WEST

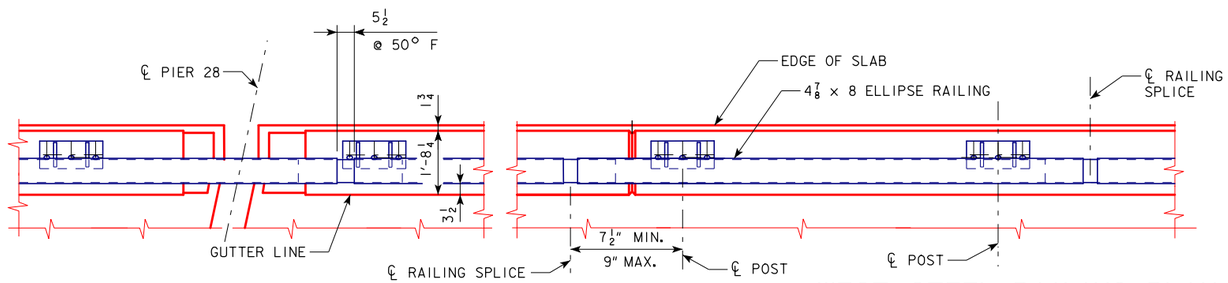

WEST STEEL RAILING PLAN

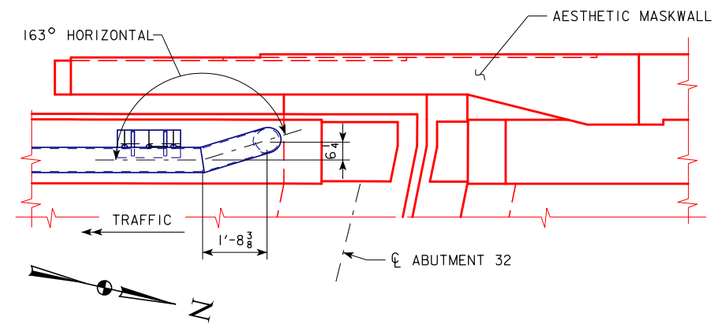

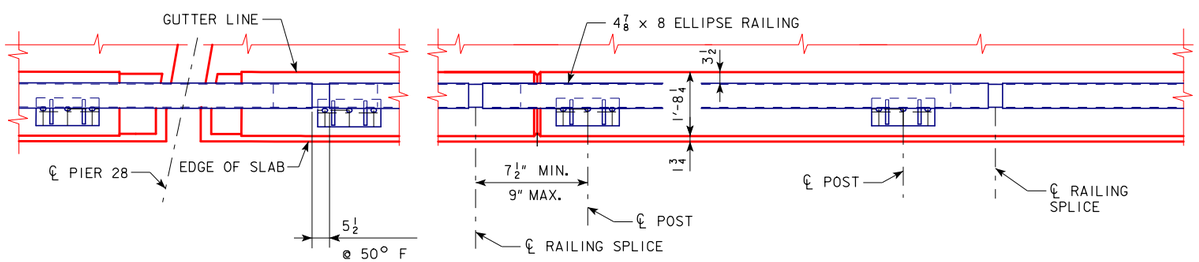

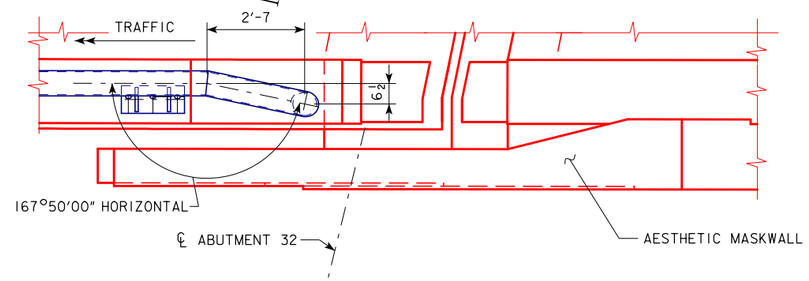

EAST STEEL RAILING PLAN

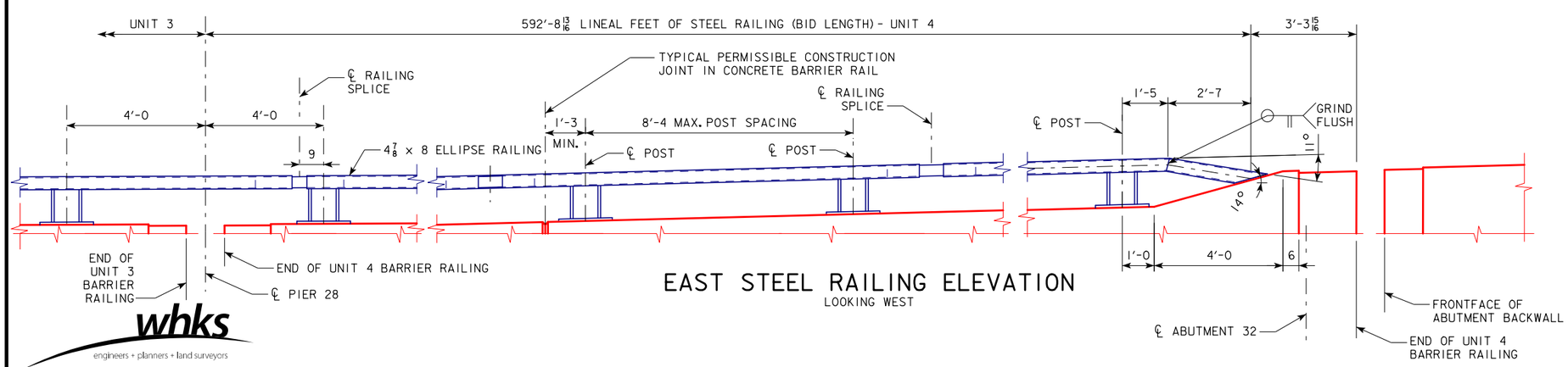

EAST STEEL RAILING ELEVATION
LOOKING WEST

NOTES:

FINGER JOINTS AND SLIDING PLATES NOT SHOWN FOR CLARITY.

SEE DESIGN SHEET 221 FOR RAILING, POSTS AND SPLICE DETAILS.

whks
engineers + planners + land surveyors

DESIGN FOR VARIABLE SKEW (L.A.)

2271'-6 x VARI. CONTINUOUS WELDED GIRDER BRIDGE-EBL W/14' BIKE TRAIL

138'-10 & 151'-0 7/8 END SPANS MULTIPLE LENGTH INTERIOR SPANS

STEEL RAILING DETAILS - UNIT 4

STA. 6792+60.93 - 52' LEFT ℄ I-74 OCTOBER, 2015

SCOTT COUNTY

IOWA DEPARTMENT OF TRANSPORTATION - HIGHWAY DIVISION

DESIGN SHEET NO. 220 OF 282 FILE NO. 30253 DESIGN NO. 3408

DESIGN TEAM JK / LG / RE	SCOTT COUNTY	PROJECT NUMBER BRFIM-074-1(200)5--05-82	SHEET NUMBER 221

2:13:17 PM untitled c:\pwise_work\do_not_delete\dms05641\82074200.brg 4/16/2016 $MODEL

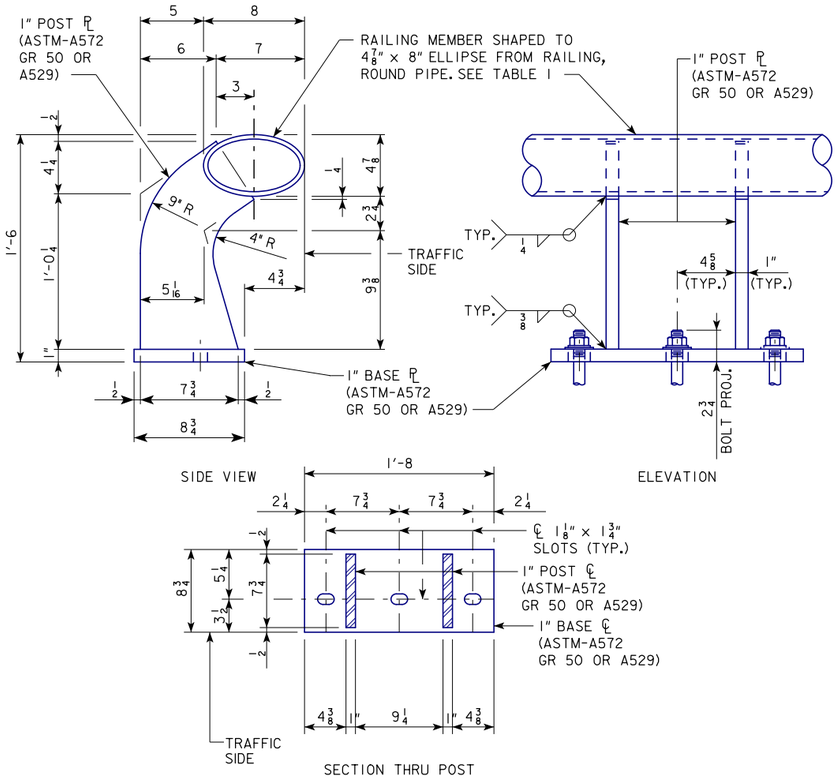

ELLIPTICAL TUBE WITH RAILING POST AND ANCHORAGE DETAILS

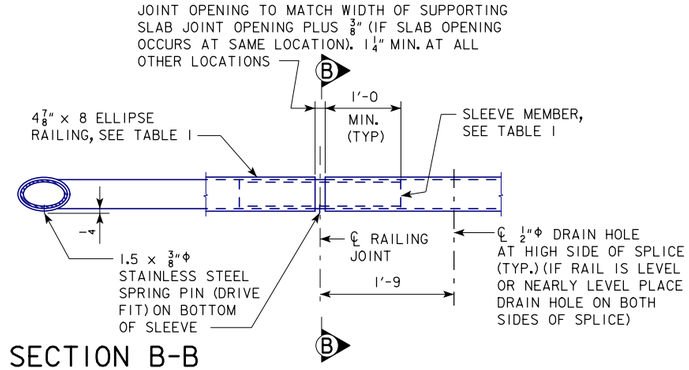

ELLIPSE RAILING SPLICE

NOTE:
THE MAJOR AND MINOR DIAMETERS OF THE RAILING MEMBER MAY VARY +/- 0.1875 INCHES FROM PLAN DIMENSIONS. HOWEVER, THE DIFFERENCE BETWEEN THE OUTSIDE DIAMETERS OF THE SLEEVE AND THE INSIDE DIAMETERS OF THE RAILING SHALL NOT EXCEED 0.125 INCHES ALONG THE MAJOR OR MINOR AXIS. THE MAXIMUM GAP ALONG THE 45° AXIS OF THE SLEEVE MAY BE 1/4" MAX.

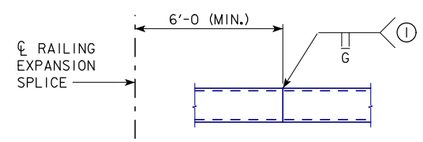

RAILING SHOP SPLICE DETAIL

(1) ONE SHOP SPLICE PER PANEL IS PERMITTED WITH MINIMUM 85 PERCENT PENETRATION. THE WELD MAY BE SQUARE GROOVE, DOUBLE VEE GROOVE, OR SINGLE GROOVE. GRIND SMOOTH.

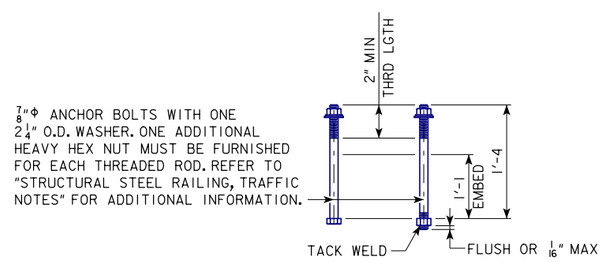

CAST-IN-PLACE ANCHOR BOLT OPTIONS

STRUCTURAL STEEL RAILING, TRAFFIC NOTES:

STRUCTURAL STEEL BARRIER JOINTS ARE TO BE LOCATED AS SHOWN.

THE STRUCTURAL STEEL RAILING IS TO BE BID ON A PER LINEAR FOOT BASIS MEASURED FROM END TO END OF STEEL RAILING.

THE NUMBER OF LINEAR FOOT OF STRUCTURAL STEEL RAILING INSTALLED WILL BE PAID FOR AT THE CONTRACT UNIT PRICE PER FOOT BASED ON PLAN QUANTITIES.

PRICE BID FOR "STRUCTURAL STEEL RAILING, TRAFFIC" SHALL BE FULL COMPENSATION FOR FURNISHING ALL MATERIAL, AND ALL EQUIPMENT AND LABOR REQUIRED TO ERECT THE RAILING IN ACCORDANCE WITH THESE PLANS AND CURRENT SPECIFICATIONS.

ALL RAILINGS, POSTS, SLEEVES, BASE PLATES, AND SHIMS SHALL BE GALVANIZED AFTER FABRICATION IN ACCORDANCE WITH THE REQUIREMENTS OF ASTM A123.

OPTIONAL CAST-IN-PLACE ANCHOR BOLTS TO COMPLY WITH ASTM F1554 GRADE 105. HEX NUTS TO COMPLY WITH ASTM A563 GRADE DH. WASHERS TO COMPLY WITH ASTM F436. GALVANIZING IN ACCORDANCE WITH ASTM F2329.

ANCHOR BOLTS SHALL BE 7/8" DIA., A193 GR. B7, BE FULLY THREADED WITH HEAVY HEX NUTS AND ONE HARDENED WASHER AND ONE 2 1/4" O.D. WASHER EACH. EMBED THREADED RODS 10 1/2" MIN. INTO CONCRETE PARAPET. ANCHOR BOLTS, NUTS, AND WASHERS SHALL BE GALVANIZED IN ACCORDANCE WITH ASTM F2329. ADHESIVE BONDING MATERIAL SYSTEM SHALL BE IN ACCORDANCE WITH MATERIALS I.M. 491.11. INSTALLED ANCHORS SHALL BE CAPABLE OF OBTAINING AN ULTIMATE LOAD PER THREADED ROD OF 36 KIPS IN TENSION FOR THE SPACING AND EDGE DISTANCE SHOWN IN THE PLANS. INSTALL AND FIELD TEST ANCHORS IN ACCORDANCE WITH THE DEVELOPMENTAL SPECIFICATION, "INSTALLING ADHESIVE-BONDED ANCHORS AND DOWELS FOR TRAFFIC RAILINGS".

TESTING NOTE FOR TUBE STEEL:

THE RESULTS OF THE FOLLOWING TEST SHALL BE SUBMITTED AS A CERTIFIED TEST REPORT TO THE CENTRAL MATERIALS OFFICE IN AMES ALONG WITH A CERTIFIED MILL TEST REPORT. IN ADDITION, A 1 FOOT LONG TUBE SAMPLE FROM THE FABRICATING SHOP SHALL ALSO BE SUBMITTED TO THE CENTRAL MATERIALS OFFICE IN AMES FOR VERIFICATION TESTING.

TESTING IS NOT REQUIRED FOR HOT ROLLED TUBE STEEL CONFORMING TO ASTM A501.

ALL COLD FORMED TUBE STEEL SHALL BE TESTED IN ACCORDANCE WITH THE REQUIREMENTS OF ASTM E436 - "DROP-WEIGHT TEAR TESTS OF FERRITIC STEELS", EXCEPT WITH THE FOLLOWING MODIFICATIONS:

ALL TESTS SHALL BE PERFORMED BY THE PRODUCING MILL PRIOR TO FABRICATION. MATERIAL SAMPLES SHALL BE GALVANIZED IN ACCORDANCE WITH ASTM A123 PRIOR TO TESTING.

THE TESTING SHALL BE CONDUCTED AT A TEMPERATURE OF 0 DEGREES FAHRENHEIT ON A 3" x 1'-0 SPECIMEN.

IF THE AVERAGE PERCENT SHEAR AREA FALLS BELOW 50 PERCENT THE MATERIAL REPRESENTED BY THESE TESTS SHALL BE REJECTED.

ALL MATERIALS SHALL BE ACCEPTED ON THE BASIS OF COMPLYING TEST RESULTS AND CERTIFIED MILL TEST REPORT.

TO FACILITATE ACCEPTANCE AND REJECTION OF MATERIAL, THE MANUFACTURER OF THE STRUCTURAL STEEL SHAPE SHALL IDENTIFY THE PRODUCT WITH THE STEEL HEAT NUMBER THAT IS TRACEABLE AT THE TIME OF ACCEPTANCE. THE HEAT NUMBER SHALL BE PLACED AT INTERVALS NOT TO EXCEED 4'-0.

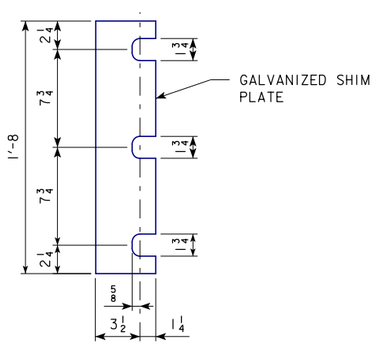

SHIM PLATE DETAIL

NOTE:
PROVIDE 2-1/16" GALVANIZED STEEL SHIMS FOR EACH RAIL POST, TO BE USED AS REQUIRED.

TABLE I

APPROVED RAILING MATERIAL		
4 7/8 x 8 ELLIPSE RAILING	SLEEVE MEMBER (AT RAILING SPLICE)	
MATERIAL	MATERIAL	THICKNESS
6" DIA. STD. PIPE ASTM-A53 E OR S GRADE B	ASTM-A53-B	0.353"
	A36 OR A500 GR. B	0.339"
	API-5LX52	0.224"
6" DIA., 0.280" WALL THICKNESS ASTM-A501	ASTM-A53-B	0.353"
	A36 OR A500 GR. B	0.339"
	API-5LX52	0.224"
6 5/8" O.D. x 0.188" TUBE API-5LX52	ASTM-A53-B	0.339"
	A36 OR A500 GR. B	0.325"
	API-5LX52	0.216"

DESIGN FOR VARIABLE SKEW (L.A.)

2271'-6 x VARI. CONTINUOUS WELDED GIRDER BRIDGE-EBL W/14' BIKE TRAIL

138'-10 & 151'-0 7/8 END SPANS MULTIPLE LENGTH INTERIOR SPANS

STEEL RAILING DETAILS

STA. 6792+60.93 - 52' LEFT ℄ I-74 OCTOBER, 2015

SCOTT COUNTY

IOWA DEPARTMENT OF TRANSPORTATION - HIGHWAY DIVISION

DESIGN SHEET NO. 221 OF 282 FILE NO. 30253 DESIGN NO. 3408

whks engineers + planners + land surveyors

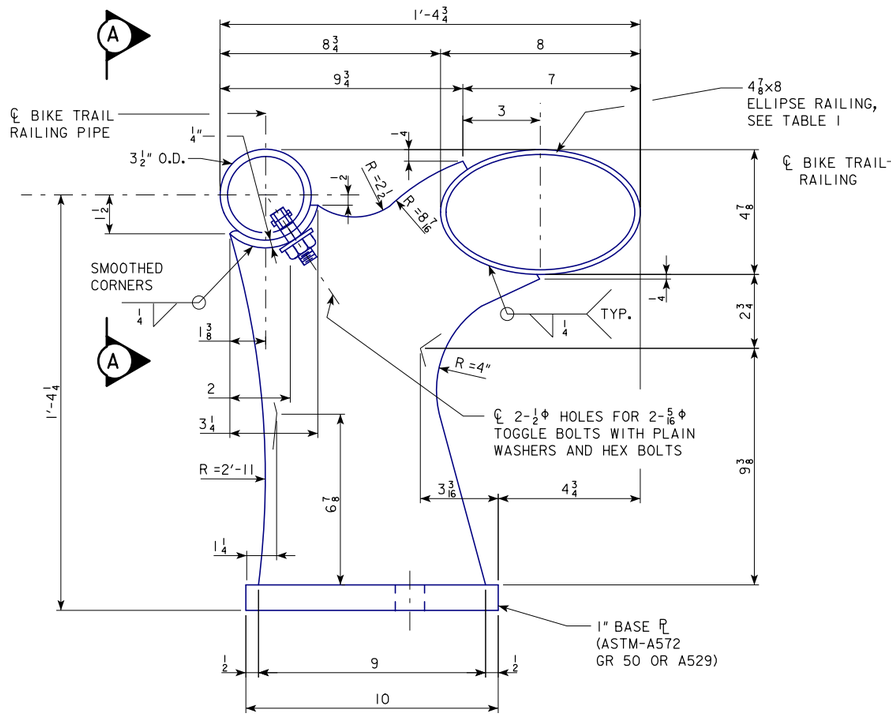

ELEVATION-RAISED TRAFFIC AND BICYCLE RAILING POST

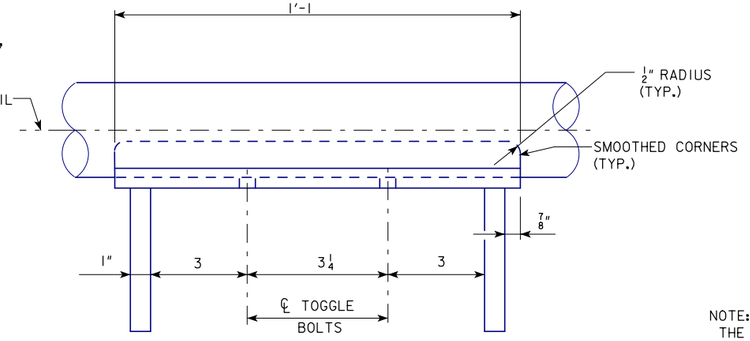

SECTION A-A

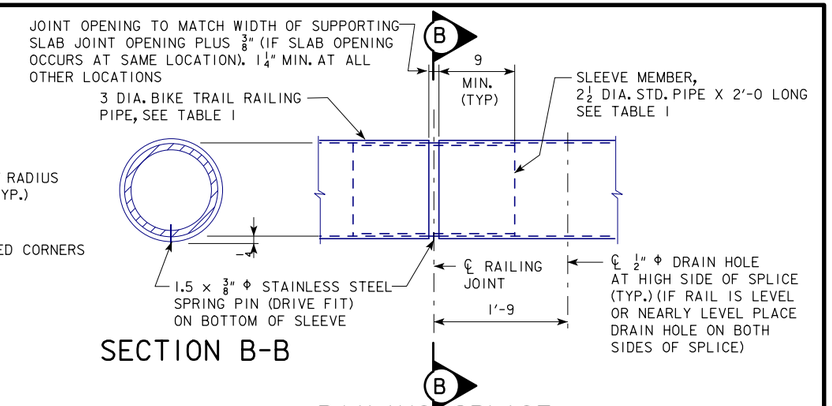

SECTION B-B

RAILING SPLICE

NOTE:
THE MAJOR AND MINOR DIAMETERS OF THE RAIL MEMBER MAY VARY +/- 0.1875 INCHES FROM PLAN DIMENSIONS. HOWEVER, THE DIFFERENCE BETWEEN THE OUTSIDE DIAMETERS OF THE SLEEVE AND THE INSIDE DIAMETERS OF THE RAIL SHALL NOT EXCEED 0.125 INCHES ALONG THE MAJOR OR MINOR AXIS. THE MAXIMUM GAP ALONG THE 45° AXIS OF THE SLEEVE MAY BE 1/4" MAX.

TESTING NOTE FOR TUBE STEEL:

THE RESULTS OF THE FOLLOWING TEST SHALL BE SUBMITTED AS A CERTIFIED TEST REPORT TO THE CENTRAL MATERIALS OFFICE IN AMES ALONG WITH A CERTIFIED MILL TEST REPORT. IN ADDITION, A 1 FOOT LONG TUBE SAMPLE FROM THE FABRICATING SHOP SHALL ALSO BE SUBMITTED TO THE CENTRAL MATERIALS OFFICE IN AMES FOR VERIFICATION TESTING.

TESTING IS NOT REQUIRED FOR HOT ROLLED TUBE STEEL CONFORMING TO ASTM A501.

ALL COLD FORMED TUBE STEEL SHALL BE TESTED IN ACCORDANCE WITH THE REQUIREMENTS OF ASTM E436 - "DROP-WEIGHT TEAR TESTS OF FERRITIC STEELS", EXCEPT WITH THE FOLLOWING MODIFICATIONS:

ALL TESTS SHALL BE PERFORMED BY THE PRODUCING MILL PRIOR TO FABRICATION. MATERIAL SAMPLES SHALL BE GALVANIZED IN ACCORDANCE WITH ASTM A123 PRIOR TO TESTING.

THE TESTING SHALL BE CONDUCTED AT A TEMPERATURE OF 0 DEGREES FAHRENHEIT ON A 3" x 1'-0 SPECIMEN.

IF THE AVERAGE PERCENT SHEAR AREA FALLS BELOW 50 PERCENT THE MATERIAL REPRESENTED BY THESE TESTS SHALL BE REJECTED.

ALL MATERIALS SHALL BE ACCEPTED ON THE BASIS OF COMPLYING TEST RESULTS AND CERTIFIED MILL TEST REPORT.

TO FACILITATE ACCEPTANCE AND REJECTION OF MATERIAL, THE MANUFACTURER OF THE STRUCTURAL STEEL SHAPE SHALL IDENTIFY THE PRODUCT WITH THE STEEL HEAT NUMBER THAT IS TRACEABLE AT THE TIME OF ACCEPTANCE. THE HEAT NUMBER SHALL BE PLACED AT INTERVALS NOT TO EXCEED 4'-0.

TESTING OF STEEL BIKE TRAIL RAILING PIPE IS NOT REQUIRED.

TABLE I

APPROVED RAILING MATERIAL		
4 7/8 × 8 ELLIPSE RAILING	SLEEVE MEMBER (AT RAILING SPLICE)	
MATERIAL	MATERIAL	THICKNESS
6" DIA. STD. PIPE ASTM-A53 E OR S GRADE B	ASTM-A53-B	0.353"
	A36 OR A500 GR. B	0.339"
	API-5LX52	0.224"
6" DIA., 0.280" WALL THICKNESS ASTM-A501	ASTM-A53-B	0.353"
	A36 OR A500 GR. B	0.339"
	API-5LX52	0.224"
6 5/8" O.D. × 0.188" TUBE API-5LX52	ASTM-A53-B	0.339"
	A36 OR A500 GR. B	0.325"
	API-5LX52	0.216"
3 1/2 DIA. BIKE TRAIL RAILING PIPE	SLEEVE MEMBER (AT RAILING SPLICE)	
MATERIAL	MATERIAL	
3 " DIA. STD. PIPE ASTM-A53 E OR S GRADE B	2 1/2" DIA. STD. PIPE ASTM-A53 E OR S GRADE B	

STRUCTURAL STEEL RAILING, TRAFFIC & BICYCLE NOTES:

STRUCTURAL STEEL BARRIER JOINTS ARE TO BE LOCATED AS SHOWN.

THE STRUCTURAL STEEL RAILING IS TO BE BID ON A PER LINEAR FOOT BASIS MEASURED FROM END TO END OF STEEL RAILING.

THE NUMBER OF LINEAR FOOT OF STRUCTURAL STEEL RAILING INSTALLED WILL BE PAID FOR AT THE CONTRACT UNIT PRICE PER FOOT BASED ON PLAN QUANTITIES.

PRICE BID FOR "STRUCTURAL STEEL RAILING, TRAFFIC & BICYCLE" SHALL BE FULL COMPENSATION FOR FURNISHING ALL MATERIAL, AND ALL THE EQUIPMENT AND LABOR REQUIRED TO ERECT THE RAILING IN ACCORDANCE WITH THESE PLANS AND CURRENT SPECIFICATIONS.

ALL RAILINGS, POSTS, SLEEVES, BASE PLATES, AND SHIMS SHALL BE GALVANIZED AFTER FABRICATION IN ACCORDANCE WITH THE REQUIREMENTS OF ASTM A123.

OPTIONAL CAST-IN-PLACE ANCHOR BOLTS TO COMPLY WITH ASTM F1554 GRADE 105. HEX NUTS TO COMPLY WITH ASTM A563 GRADE DH. WASHERS TO COMPLY WITH ASTM F436. GALVANIZING IN ACCORDANCE WITH ASTM F2329.

ANCHOR BOLTS SHALL BE 7/8" DIA., A193 GR. B7, BE FULLY THREADED WITH HEAVY HEX NUTS AND ONE HARDENED WASHER AND ONE 2 1/4" O.D. WASHER EACH. EMBED THREADED RODS 10 1/2" MIN. INTO CONCRETE PARAPET. ANCHOR BOLTS, NUTS, AND WASHERS SHALL BE GALVANIZED IN ACCORDANCE WITH ASTM F2329. ADHESIVE BONDING MATERIAL SYSTEM SHALL BE IN ACCORDANCE WITH MATERIALS I.M. 491.11. INSTALLED ANCHORS SHALL BE CAPABLE OF OBTAINING AN ULTIMATE LOAD PER THREADED ROD OF 36 KIPS IN TENSION FOR THE SPACING AND EDGE DISTANCE SHOWN IN THE PLANS. INSTALL AND FIELD TEST ANCHORS IN ACCORDANCE WITH THE DEVELOPMENTAL SPECIFICATION, "INSTALLING ADHESIVE-BONDED ANCHORS AND DOWELS FOR TRAFFIC RAILINGS".

TOGGLE BOLTS SHALL BE A TYPE OF STUD AND/OR SCREW STYLE CAPABLE OF SUPPORTING A 1,000 POUND LOAD IN TENSION WHEN TESTED THROUGH A 1/2" ROUND HOLE. TOGGLE BOLTS SHALL BE GALVANIZED IN ACCORDANCE WITH ASTM F2329. TOGGLE BOLTS MAY BE CADMIUM-PLATED TO MEET THE REQUIREMENTS OF ASTM B766 "ELECTRODEPOSITED COATINGS OF CADMIUM" IN PLACE OF GALVANIZING.

THE TESTING OF THE TOGGLE BOLTS SHALL FOLLOW THE GUIDELINES SET FORTH IN ASTM A370 WITH THE FOLLOWING MODIFICATIONS. THE BOTTOM FIXTURE USED TO GRIP THE BOLT SHALL ALLOW THE END PIECES TO SPREAD PRIOR TO GRIPPING IT. THE FIXTURE AT THE TOP SHOULD ALLOW CENTERING OF THE BOLT ALLOWING THE BOLT TO PULLED AXIALLY. THE SPEED OF THE TEST SHOULD BE APPROXIMATELY 1/4" PER MINUTE.

SEE DESIGN SHEET 221 FOR ELLIPSE RAILING SPLICE, RAILING SHOP SPLICE AND CAST IN PLACE ANCHOR BOLT OPTIONS DETAILS.

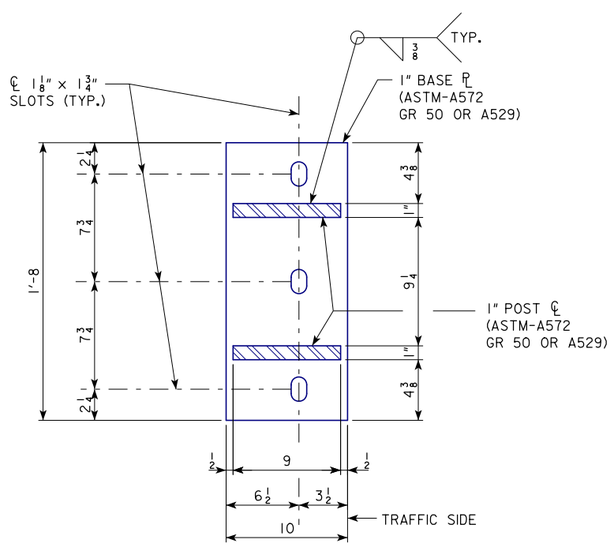

BASE PLATE DETAIL

whks
engineers + planners + land surveyors

DESIGN FOR VARIABLE SKEW (L.A.)

2271'-6 × VARI. CONTINUOUS WELDED GIRDER BRIDGE-EBL W/14' BIKE TRAIL

138'-10 & 151'-0 7/8 END SPANS MULTIPLE LENGTH INTERIOR SPANS

SEPARATION RAILING DETAILS

STA. 6792+60.93 - 52' LEFT ℄ I-74 OCTOBER, 2015

SCOTT COUNTY

IOWA DEPARTMENT OF TRANSPORTATION - HIGHWAY DIVISION

DESIGN SHEET NO. 222 OF 282 FILE NO. 30253 DESIGN NO. 3408

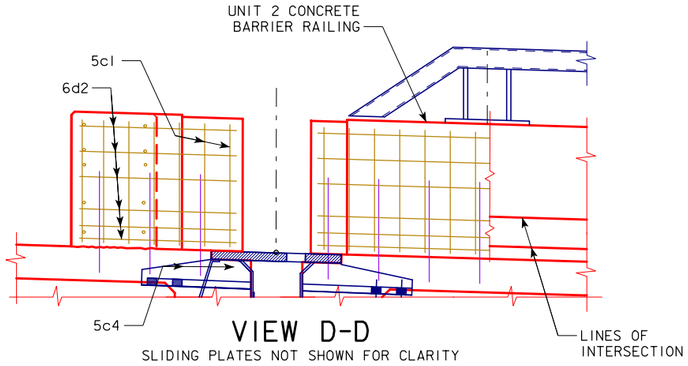

VIEW D-D

SLIDING PLATES NOT SHOWN FOR CLARITY

BARRIER AT GORE AREA NOTES:

THE 5c2 AND 5c4 BARS MAY BE SET AS DOWELS IN DRILLED HOLES. HOLES ARE TO BE 6" DEEP. THE DOWELS SHALL BE INSTALLED IN ACCORDANCE WITH THE MANUFACTURER'S RECOMMENDATIONS. EITHER OF THE FOLLOWING SYSTEMS MAY BE USED AS A BONDING AGENT FOR VERTICAL DOWELS, BUT ONLY SYSTEM "A" MAY BE USED FOR HORIZONTAL DOWELS:

A. POLYMER GROUT SYSTEM IN ACCORDANCE WITH ARTICLE 2301.03, E, OF THE STANDARD SPECIFICATIONS.

B. HYDRAULIC CEMENT GROUT SYSTEMS. DRILLED HOLES ARE TO BE $2\frac{1}{2}$ TIMES THE DOWEL DIAMETER AND ARE TO BE BLOWN CLEAN WITH COMPRESSED AIR IMMEDIATELY PRIOR TO PLACING GROUT. THE HYDRAULIC CEMENT GROUT SHALL BE ONE OF THOSE APPROVED IN MATERIALS I.M. 491.13 AND SHALL BE USED IN ACCORDANCE WITH THE MANUFACTURER'S RECOMMENDATIONS.

THE CONTRACTOR SHALL ADJUST BARRIER REINFORCING AS NECESSARY TO AVOID INTERFERENCE WITH THE REINFORCING STEEL IN THE BRIDGE DECK.

THE PRICE BID FOR "CONCRETE BARRIER RAILING" SHALL INCLUDE THE COSTS OF SETTING BARS AS DOWELS IN THE BARRIER AT GORE AREA.

EPOXY REINFORCING STEEL-GORE AREA

BAR	LOCATION	SHAPE	NO.	LENGTH	WEIGHT
5c1-1	VERTICAL		15	8'-2	128
5c3-1	VERTICAL		5	9'-0	47
6d1-1	LONGIT.-GORE RAIL		10	4'-0	60
6d2-1	LONGIT.-WEST RAIL		10	3'-10	58
6d3-1	LONGIT.-EAST RAIL		10	3'-3	49
	(INCLUDED WITH UNIT 1 BARRIER RAIL)		TOTAL WT. (LBS.)		342

STAINLESS STEEL-GORE AREA

BAR	LOCATION	SHAPE	NO.	LENGTH	WEIGHT
5c2-1	VERTICAL		6	2'-7	16
5c4-1	VERTICAL		8	5'-1	42
	(INCLUDED WITH UNIT 1 BARRIER RAIL)		TOTAL WT. (LBS.)		58

BENT BAR DETAILS

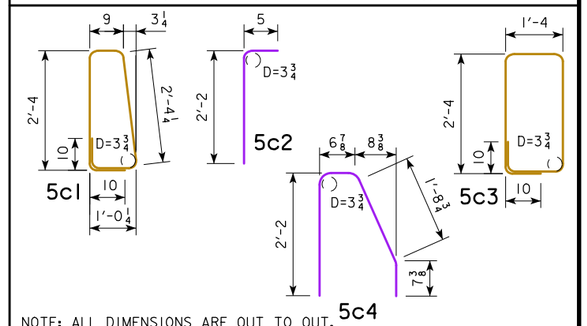

NOTE: ALL DIMENSIONS ARE OUT TO OUT.
D = PIN DIAMETER.

CONCRETE PLACEMENT SUMMARY-C.Y.

SECTION		TOTAL
2'-8 SPECIAL SECT.-WEST SIDE	4.5' @ 0.130 C.Y. PER FT.	0.6
2'-8 SPECIAL SECT.-EAST SIDE	3.7' @ 0.130 C.Y. PER FT.	0.5
2'-8 GORE BARRIER	2.2' @ 0.165 C.Y. PER FT.	0.4
	TOTAL (C.Y.)	1.5

GORE AREA BARRIER QUANTITIES

ITEM	UNIT	QUANTITY
GORE AREA BARRIER (INCLUDE W/ UNIT 1 QUANTITY)	L.F.	10.4

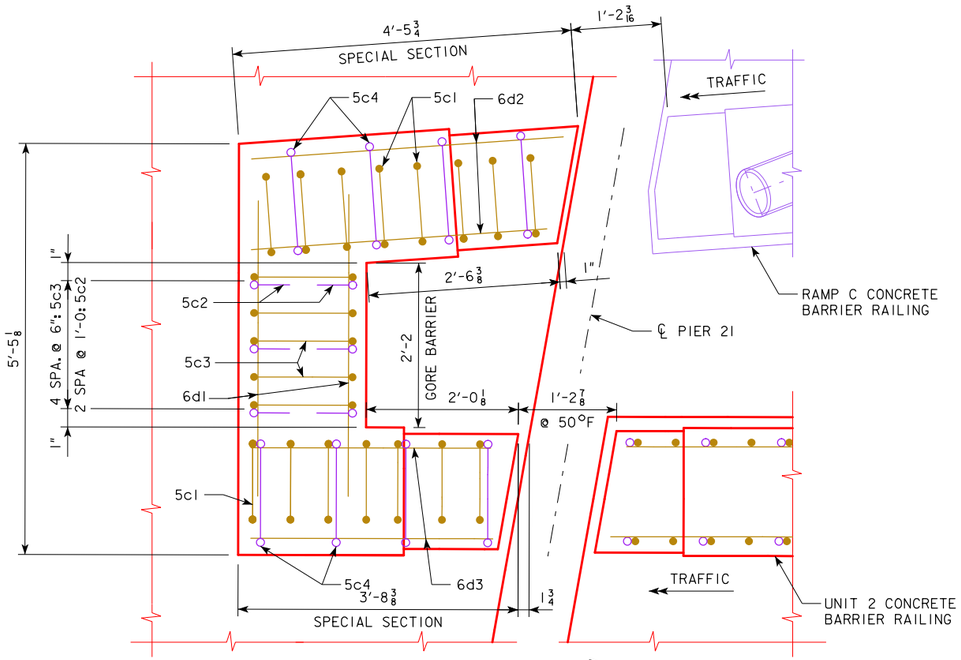

ENLARGED PLAN

SLIDING PLATES AND FINGER JOINTS NOT SHOWN FOR CLARITY

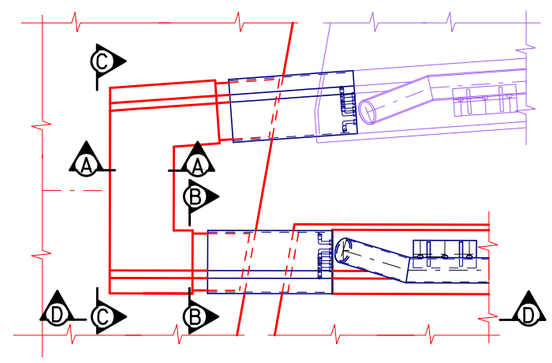

PLAN

FINGER JOINTS NOT SHOWN FOR CLARITY

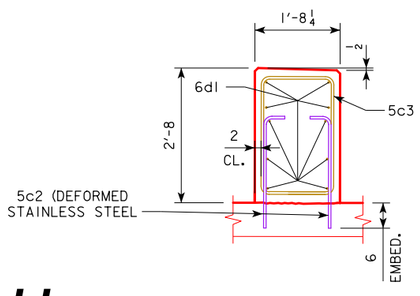

SECTION A-A

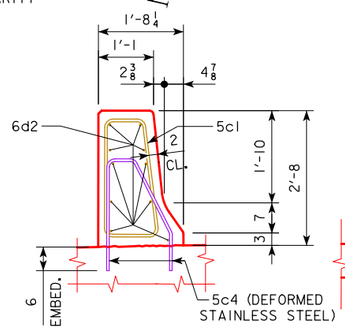

SECTION B-B

SEE SECTION F-F ON DES. SH. 203 FOR REINFORCING SPACING AND CLEARANCE.

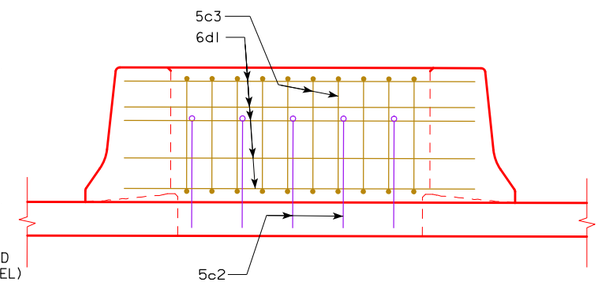

VIEW C-C

whks
engineers + planners + land surveyors

DESIGN FOR VARIABLE SKEW (L.A.)

2271'-6 x VARI. CONTINUOUS WELDED GIRDER BRIDGE-EBL W/14' BIKE TRAIL

138'-10 & 151'-0 7/8 END SPANS MULTIPLE LENGTH INTERIOR SPANS

GORE AREA DETAILS - UNIT 1

STA. 6792+60.93 - 52' LEFT ℄ I-74 OCTOBER, 2015

SCOTT COUNTY

IOWA DEPARTMENT OF TRANSPORTATION - HIGHWAY DIVISION

DESIGN SHEET NO. 223 OF 282 FILE NO. 30253 DESIGN NO. 3408

EPOXY REINF. — 2 RAILINGS & 1 PARAPET - UNIT 1

BAR	LOCATION	SHAPE	NO.	LENGTH	WEIGHT
5c1-1	VERTICAL		2677	7'-8	21,406
6d1-1	LONGIT. - EAST RAILING		180	39'-7	10,702
6d2-1	LONGIT. - SEPARATION RAILING		180	39'-11	10,792
5d3-1	LONGITUDINAL-CONCRETE PARAPET		90	39'-8	3,724
5d4-1	TRANSVERSE-CONCRETE PARAPET		616	6'-6	4,176
	EPOXY COATED STEEL FROM GORE AREA				342
	(INCLUDED WITH SUPERSTRUCTURE) TOTAL WT. (LBS.)				51,142

EPOXY REINF. — 2 RAILINGS - UNIT 2

BAR	LOCATION	SHAPE	NO.	LENGTH	WEIGHT
5c1-2	VERTICAL		2186	7'-8	17,480
6d1-2	LONGITUDINAL		300	39'-1	17,611
	(INCLUDED WITH SUPERSTRUCTURE) TOTAL WT. (LBS.)				35,091

EPOXY REINF. — 2 RAILINGS - UNIT 3

BAR	LOCATION	SHAPE	NO.	LENGTH	WEIGHT
5c1-3	VERTICAL		1824	7'-8	14,585
6d1-3	LONGITUDINAL		260	37'-7	14,677
	(INCLUDED WITH SUPERSTRUCTURE) TOTAL WT. (LBS.)				29,262

S.S. REINF. — 2 RAILINGS & 1 PARAPET - UNIT 1

BAR	LOCATION	SHAPE	NO.	LENGTH	WEIGHT
5c2-1	VERTICAL		1339	6'-11	9,660
5c13-1	VERTICAL-CONCRETE PARAPET		925	6'-2	5,949
	STAINLESS STEEL FROM GORE AREA				58
	(INCLUDED WITH SUPERSTRUCTURE) TOTAL WT. (LBS.)				15,667

S.S. REINF. — 2 RAILINGS - UNIT 2

BAR	LOCATION	SHAPE	NO.	LENGTH	WEIGHT
5c2-2	VERTICAL		1094	6'-11	7,892
	(INCLUDED WITH SUPERSTRUCTURE) TOTAL WT. (LBS.)				7,892

S.S. REINF. — 2 RAILINGS-UNIT 3

BAR	LOCATION	SHAPE	NO.	LENGTH	WEIGHT
5c2-3	VERTICAL		912	6'-11	6,579
	(INCLUDED WITH SUPERSTRUCTURE) TOTAL WT. (LBS.)				6,579

EPOXY REINF. — 2 RAILINGS - UNIT 4

SECTION	BAR	LOCATION	SHAPE	NO.	LENGTH	WEIGHT
STANDARD SECTION	5c1-4	VERTICAL		2370	7'-8	18,951
	5c5-4	VERTICAL		1	7'-6	8
	5c6-4	VERTICAL		1	7'-3	8
	5c7-4	VERTICAL		1	6'-9	7
	5c8-4	VERTICAL		1	6'-3	7
	5c9-4	VERTICAL		5	7'-9	40
	6d1-4	LONGITUDINAL		320	39'-10	19,145
	6d4-4	LONGITUDINAL, SLOPED		3	7'-0	32
SPECIAL SECT. A	5c9-4	VERTICAL		31	7'-9	251
	6d5-4	LONGITUDINAL, EAST		13	22'-5	438
SPECIAL SECT. B	5c1-4	VERTICAL, END		4	7'-8	32
	5c3-4	VERTICAL		27	8'-0	225
	6d3-4	LONGITUDINAL, WEST		10	15'-5	232
		EPOXY COATED STEEL FROM END SECTION				269
		(INCLUDED WITH SUPERSTRUCTURE) TOTAL WT. (LBS.)				39,645

S.S. REINF. — 2 RAILINGS - UNIT 4

	BAR	LOCATION	SHAPE	NO.	LENGTH	WEIGHT
	5c2-4	VERT. STD. SECT.		1186	6'-11	8,556
	5c4-4	VERT. SPEC. SECT. 'B'		16	6'-11	115
	5c10-4	VERT. STD. SECT.		9	6'-4	59
	5c11-4	VERT. SPEC. SECT. 'A'		31	3'-3	105
	5c12-4	VERT. SPEC. SECT. 'A'		31	3'-10	124
		STAINLESS STEEL FROM END SECTION				201
		(INCLUDED WITH SUPERSTRUCTURE) TOTAL WT. (LBS.)				9,160

CONCRETE PLACEMENT SUMMARY-C.Y.

	SECTION		TOTAL
*	2'-8 STANDARD SECT.-SEP. RAILING	681.8' @ 0.122 C.Y. PER FT.	83.2
*	2'-8 STANDARD SECT.-E. RAILING	676.6' @ 0.122 C.Y. PER FT.	82.5
	GORE AREA BARRIER	10.4' @ VARIES C.Y. PER FT.	1.5
*	CONC. PARAPET, FENCE	682.3' @ 0.031 C.Y. PER FT.	21.2
		TOTAL CONCRETE (CY)	188.4

CONCRETE PLACEMENT SUMMARY-C.Y.

SECTION		TOTAL
2'-8 STANDARD SECT.-W. RAILING	546.7' @ 0.122 C.Y. PER FT.	66.7
2'-8 STANDARD SECT.-E. RAILING	546.7' @ 0.122 C.Y. PER FT.	66.7
	TOTAL CONCRETE (CY)	133.4

CONCRETE PLACEMENT SUMMARY-C.Y.

SECTION		TOTAL
2'-8 STANDARD SECT.-W. RAILING	456.4' @ 0.122 C.Y. PER FT.	55.7
2'-8 STANDARD SECT.-E. RAILING	456.4' @ 0.122 C.Y. PER FT.	55.7
	TOTAL CONCRETE (CY)	111.4

CONC. BARRIER RAILING QUANTITIES

	ITEM	UNIT	QUANTITY
**	CONCRETE BARRIER RAILING	L.F.	1368.8

CONC. BARRIER RAILING QUANTITIES

ITEM	UNIT	QUANTITY
CONCRETE BARRIER RAILING	L.F.	1093.4

CONC. BARRIER RAILING QUANTITIES

ITEM	UNIT	QUANTITY
CONCRETE BARRIER RAILING	L.F.	912.8

STEEL RAILING QUANTITIES - L.F.

ITEM	AMOUNT
STRUCTURAL STEEL RAILING, SEPARATION - WEST RAILING	687.9
STRUCTURAL STEEL RAILING, TRAFFIC - EAST RAILING	697.2

STEEL RAILING QUANTITIES - L.F.

ITEM	AMOUNT
STRUCTURAL STEEL RAILING, TRAFFIC - WEST RAILING	546.0
STRUCTURAL STEEL RAILING, TRAFFIC - EAST RAILING	548.0
TOTAL UNIT 2	1094.0

STEEL RAILING QUANTITIES - L.F.

ITEM	AMOUNT
STRUCTURAL STEEL RAILING, TRAFFIC - WEST RAILING	457.6
STRUCTURAL STEEL RAILING, TRAFFIC - EAST RAILING	457.6
TOTAL UNIT 3	915.2

CONCRETE PLACEMENT SUMMARY-C.Y.

	SECTION		TOTAL
	2'-8 STANDARD SECT.-W. RAILING	595.5' @ 0.122 C.Y. PER FT.	72.7
‡	2'-8 STANDARD SECT.-E. RAILING	595.5' @ 0.122 C.Y. PER FT.	72.8
	SPECIAL SECTION B - W. RAILING	15.8' @ 0.130 C.Y. PER FT.	2.1
	SPECIAL SECTION A - E. RAILING	22.8' @ 0.160 C.Y. PER FT.	3.6
	END SECTION	7' @ VARIES C.Y. PER FT.	0.8
		TOTAL CONCRETE (CY)	152.0

CONC. BARRIER RAILING QUANTITIES

ITEM	UNIT	QUANTITY
CONCRETE BARRIER RAILING	L.F.	1236.6

STEEL RAILING QUANTITIES - L.F.

ITEM	AMOUNT
STRUCTURAL STEEL RAILING, TRAFFIC - WEST RAILING	592.9
STRUCTURAL STEEL RAILING, TRAFFIC - EAST RAILING	592.7
TOTAL UNIT 4	1185.6

‡ INCLUDES 0.1 CY OF CONCRETE AT THE TRANSITION OF STANDARD RAILING TO SPECIAL SECTION 'A' NEAR ABUTMENT 32.

PEDESTRIAN RAILING QUANTITIES-L.F.

	ITEM	AMOUNT
*	CONCRETE PARAPET, FENCE	682.3
	FENCE, PERFORATED ALUMINUM	685.0

* INCLUDES PLACEMENT OF CONCRETE FOR PORTION UP TO 10 FEET FROM CENTERLINE OF PIER 16 ON SPAN 15. REINFORCING STEEL IN THIS SECTION PROVIDED BY OTHERS. LINEAR FEET OF BARRIER RAILING INCLUDED IN UNIT 1 QUANTITY.

** INCLUDES 10.4 FEET OF NON-STANDARD BARRIER AT GORE AREA.

NOTE:

DESIGNATION "-4" SIGNIFIES BAR ASSOCIATED WITH THE UNIT 4 BRIDGE. "-4" NOT SHOWN IN DETAILS FOR CLARITY.

BENT BAR DETAILS

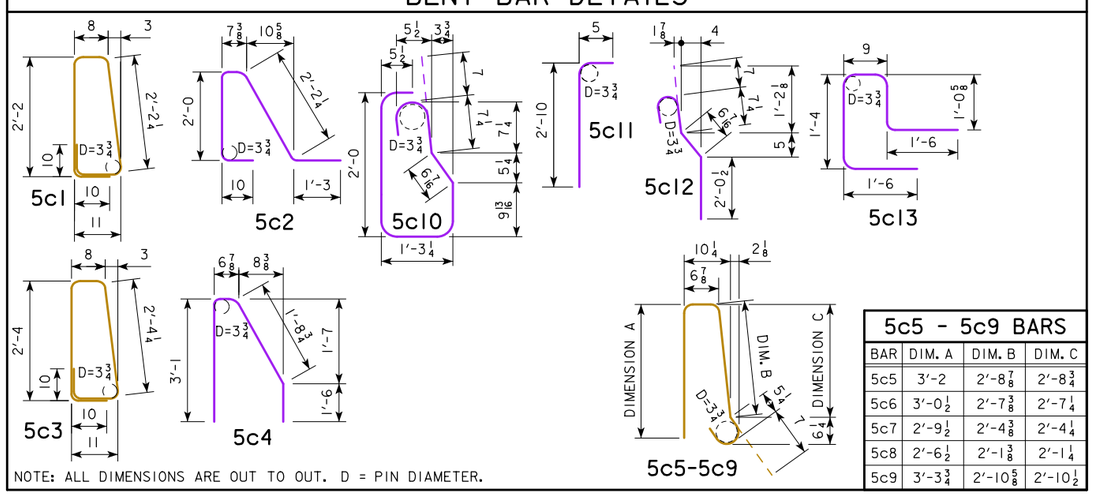

5c5 - 5c9 BARS			
BAR	DIM. A	DIM. B	DIM. C
5c5	3'-2	2'-8 7/8	2'-8 3/4
5c6	3'-0 1/2	2'-7 3/8	2'-7 1/4
5c7	2'-9 1/2	2'-4 3/8	2'-4 1/4
5c8	2'-6 1/2	2'-1 3/8	2'-1 1/4
5c9	3'-3 3/4	2'-10 5/8	2'-10 1/2

NOTE: ALL DIMENSIONS ARE OUT TO OUT. D = PIN DIAMETER.

whks
engineers + planners + land surveyors

DESIGN FOR VARIABLE SKEW (L.A.)

2271'-6 x VARI. CONTINUOUS WELDED GIRDER BRIDGE-EBL W/14' BIKE TRAIL

138'-10 & 151'-0 7/8 END SPANS MULTIPLE LENGTH INTERIOR SPANS

RAILING QUANTITIES-ALL UNITS

STA. 6792+60.93 - 52' LEFT ℄ I-74 OCTOBER, 2015

SCOTT COUNTY

IOWA DEPARTMENT OF TRANSPORTATION - HIGHWAY DIVISION

DESIGN SHEET NO. 224 OF 282 FILE NO. 30253 DESIGN NO. 3408

DESIGN TEAM JK / LG / RE | SCOTT COUNTY | PROJECT NUMBER BRFIM-074-1(200)5--05-82 | SHEET NUMBER 225

BENCH MARK NO. 500: STA. 6781+18.92 LT. 161.19'
ELEV. 575.797, CHISELED "X" IN BOLT E. SIDE
CONCRETE STRUCTURE

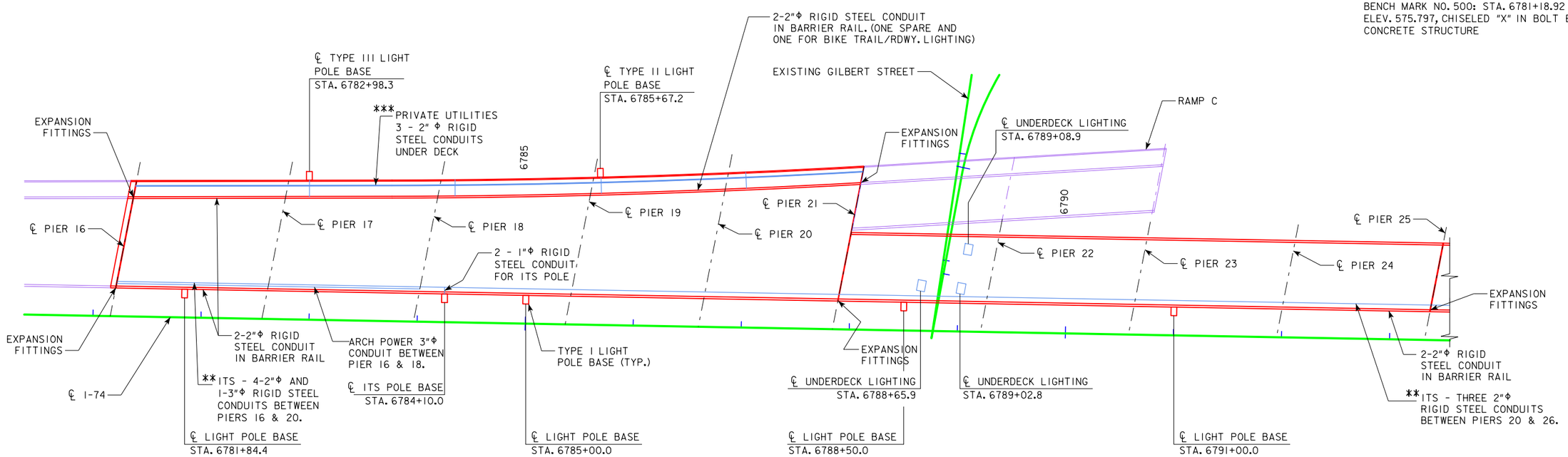

NOTE:

ONE 2"Φ RIGID STEEL CONDUIT FOR AESTHETIC PIER LIGHTING RUNS ALONG THE PIER CAP AT PIERS 16 & 21.

CONDUIT AND LIGHTING LAYOUT

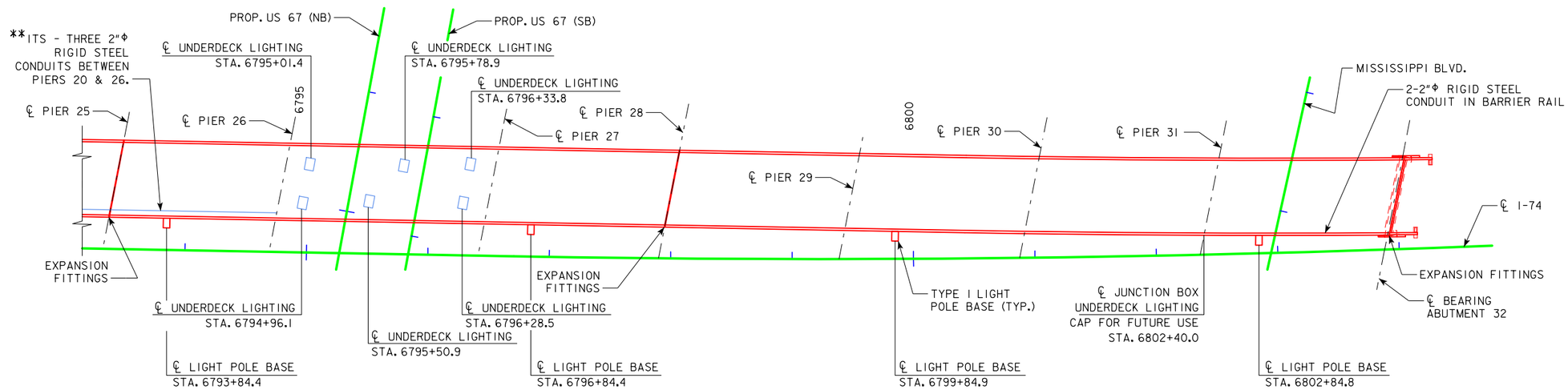

CONDUIT AND LIGHTING LAYOUT

N

** BILLED ON C-SHEETS, TABULATED ON N-SHEETS

*** BILLED ON C-SHEETS, TABULATED ON P-SHEETS

NOTES:

SEE P SHEETS AND N SHEETS IN THESE PLANS FOR ADDITIONAL DETAILS OF CONDUIT AND LIGHTING.

whks
engineers + planners + land surveyors

DESIGN FOR VARIABLE SKEW (L.A.)

2271'-6 x VARI. CONTINUOUS WELDED GIRDER BRIDGE-EBL W/14' BIKE TRAIL

138'-10 & 151'-0 7/8 END SPANS MULTIPLE LENGTH INTERIOR SPANS

LIGHTING DETAILS

STA. 6792+60.93 - 52' LEFT ℄ I-74 OCTOBER, 2015

SCOTT COUNTY

IOWA DEPARTMENT OF TRANSPORTATION - HIGHWAY DIVISION

DESIGN SHEET NO. 225 OF 282 FILE NO. 30253 DESIGN NO. 3408

DESIGN TEAM CF / LG / JP	SCOTT COUNTY	PROJECT NUMBER BRFIM-074-1(200)5--05-82	SHEET NUMBER 226

BENCH MARK NO. 500: STA. 6781+18.92 LT. 161.19'
ELEV. 575.797, CHISELED "X" IN BOLT E. SIDE
CONCRETE STRUCTURE

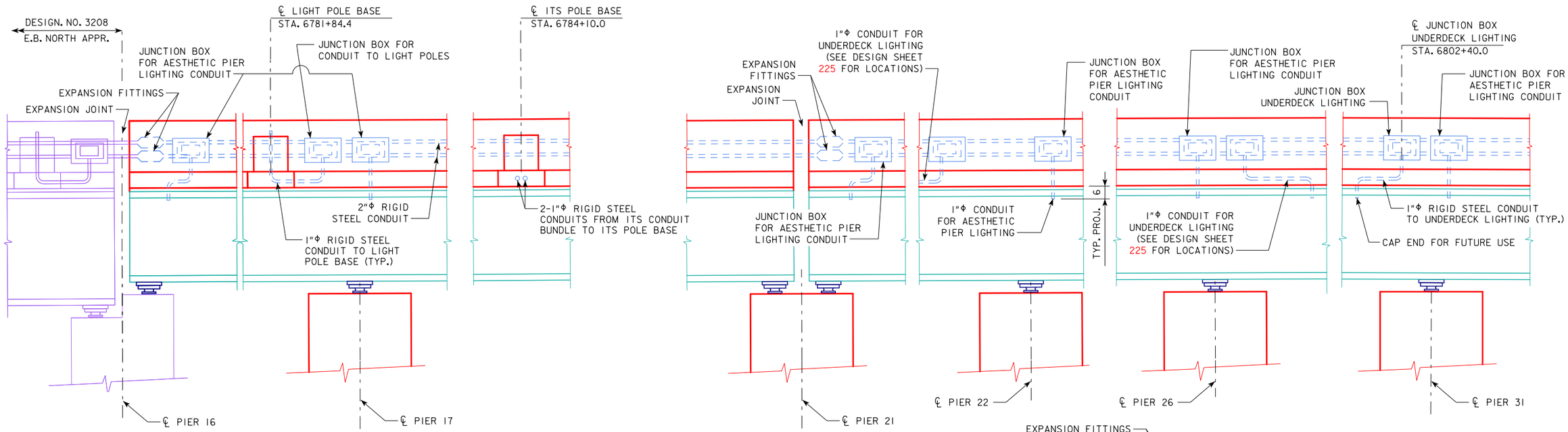

EXTERIOR ELEVATION - EAST BARRIER RAIL

LOOKING WEST

JUNCTION BOX FOR AESTHETIC PIER LIGHTING CONDUIT TO BE LOCATED AT EVERY PIER

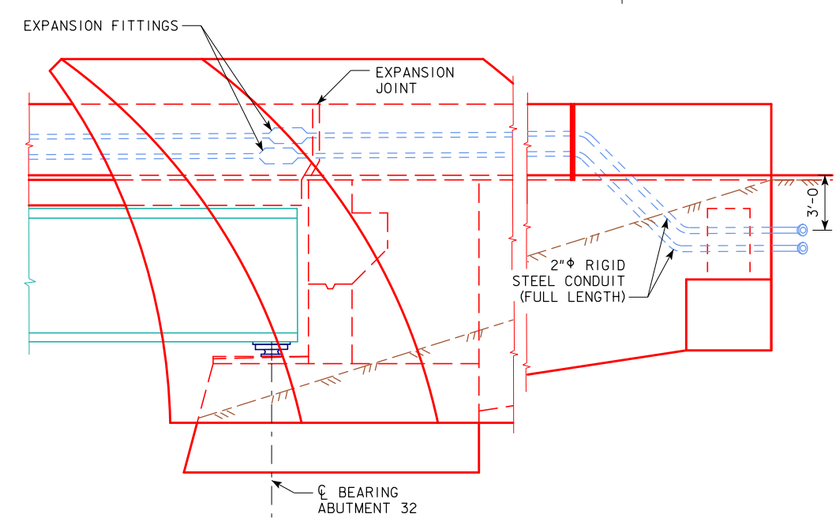

EXTERIOR ELEVATION - EAST BARRIER RAIL

LOOKING WEST NEAR ABUTMENT 32 - WEST BARRIER RAIL SIMILAR

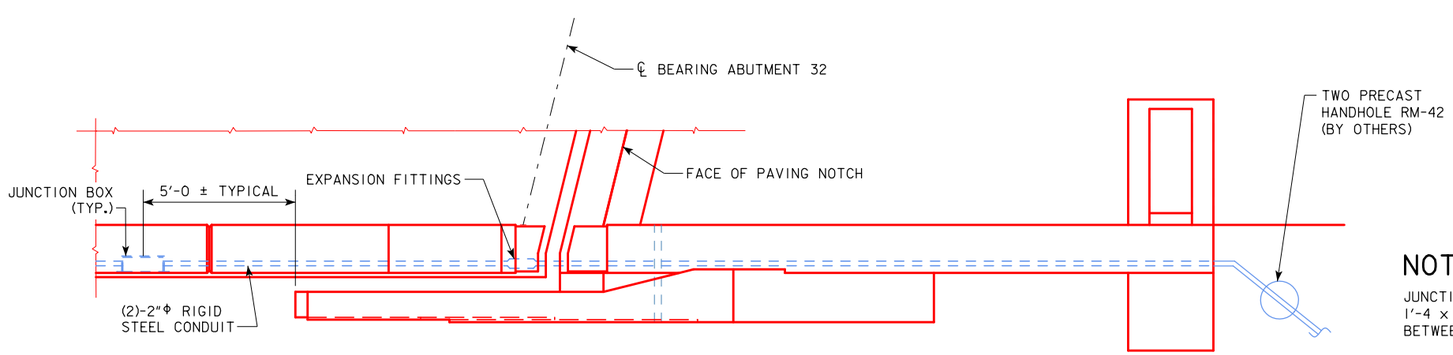

PART PLAN AT WINGS

N

NOTES:

JUNCTION BOXES IN THE BARRIERS SHALL BE 1'-4 x 1'-4 x 8". MINIMUM SPACING BETWEEN JUNCTION BOXES SHALL BE 8'-0.

SEE P SHEETS AND N SHEETS IN THESE PLANS FOR ADDITIONAL DETAILS OF CONDUIT AND LIGHTING.

CAP AND SEAL ALL EXPOSED CONDUIT FOR FUTURE CONNECTION.

whks
engineers + planners + land surveyors

DESIGN FOR VARIABLE SKEW (L.A.)

2271'-6 x VARI. CONTINUOUS WELDED GIRDER BRIDGE-EBL W/14' BIKE TRAIL

138'-10 & 151'-0 7/8 END SPANS MULTIPLE LENGTH INTERIOR SPANS

LIGHTING DETAILS

STA. 6792+60.93 - 52' LEFT ℄ I-74 OCTOBER, 2015

SCOTT COUNTY

IOWA DEPARTMENT OF TRANSPORTATION - HIGHWAY DIVISION

DESIGN SHEET NO. 226 OF 282 FILE NO. 30253 DESIGN NO. 3408

BENCH MARK NO. 500: STA. 6781+18.92 LT. 161.19'
ELEV. 575.797, CHISELED "X" IN BOLT E. SIDE
CONCRETE STRUCTURE

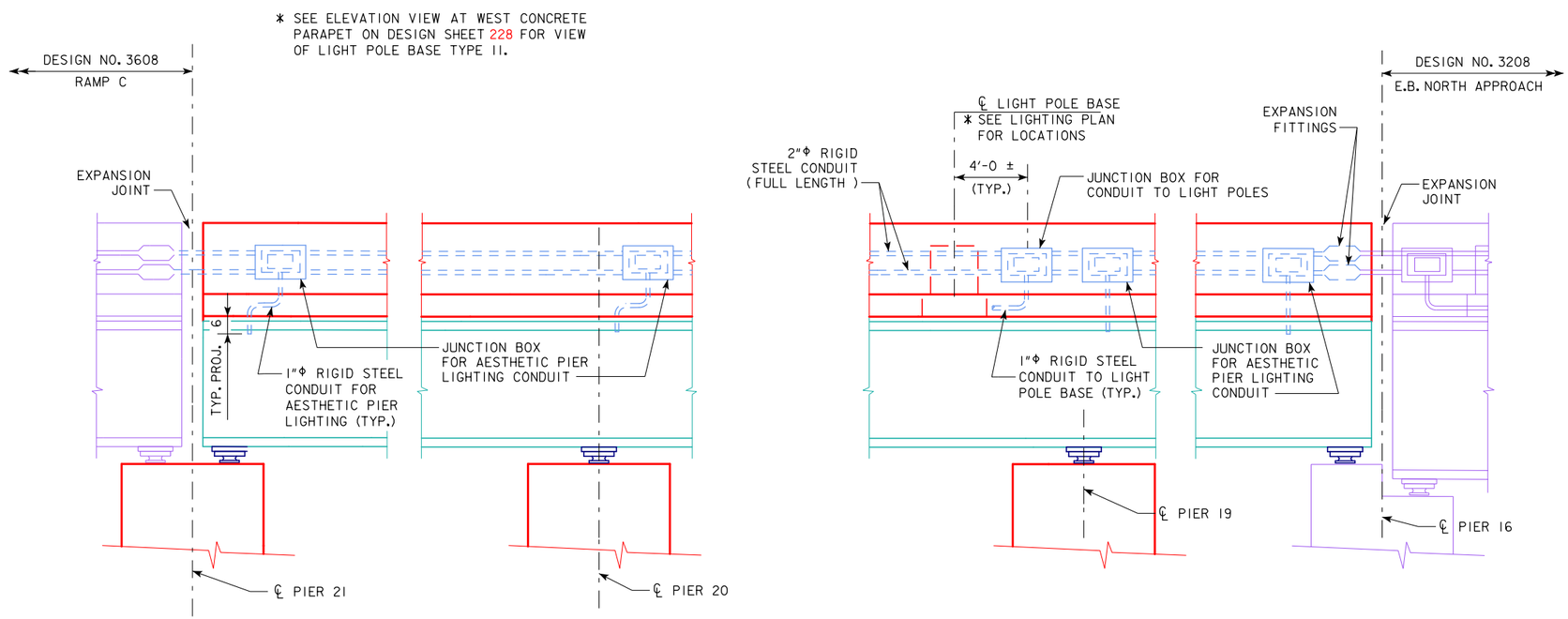

NOTES:

JUNCTION BOXES IN THE BARRIERS SHALL BE 1'-4 x 1'-4 x 8".
MINIMUM SPACING BETWEEN JUNCTION BOXES SHALL BE 8'-0.

SEE P SHEETS AND N SHEETS IN THESE PLANS FOR ADDITIONAL DETAILS OF CONDUIT AND LIGHTING.

CAP AND SEAL ALL EXPOSED CONDUIT FOR FUTURE CONNECTION.

EXTERIOR ELEVATION - WEST SEPARATION BARRIER RAIL

LOOKING EAST

whks
engineers + planners + land surveyors

DESIGN FOR VARIABLE SKEW (L.A.)

2271'-6 x VARI. CONTINUOUS WELDED GIRDER BRIDGE-EBL W/14' BIKE TRAIL

138'-10 & 151'-0 7/8 END SPANS MULTIPLE LENGTH INTERIOR SPANS

LIGHTING DETAILS

STA. 6792+60.93 - 52' LEFT ℄ I-74 OCTOBER, 2015

SCOTT COUNTY

IOWA DEPARTMENT OF TRANSPORTATION - HIGHWAY DIVISION

DESIGN SHEET NO. 227 OF 282 FILE NO. 30253 DESIGN NO. 3408

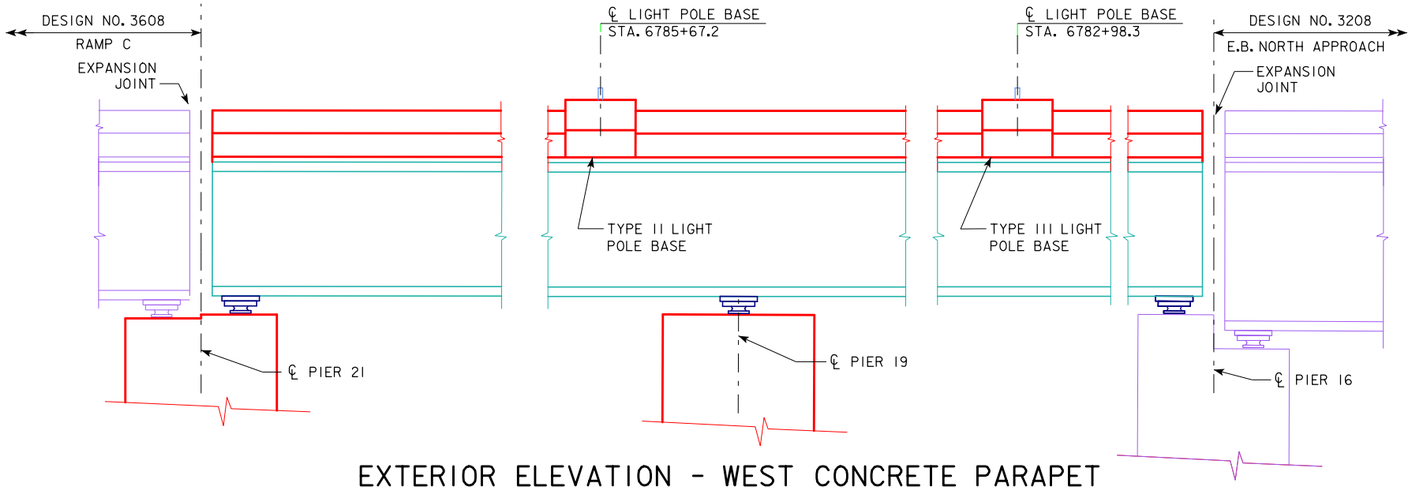

EXTERIOR ELEVATION - WEST CONCRETE PARAPET

LOOKING EAST

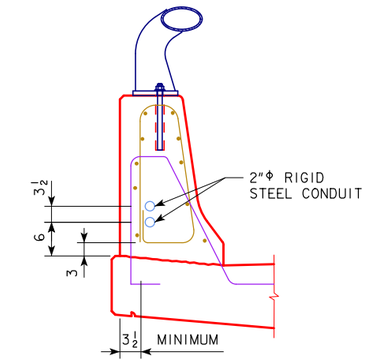

SECTION THRU BARRIER RAIL

BARRIER RAIL SHOWN.
SEPARATION BARRIER RAIL SIMILAR.

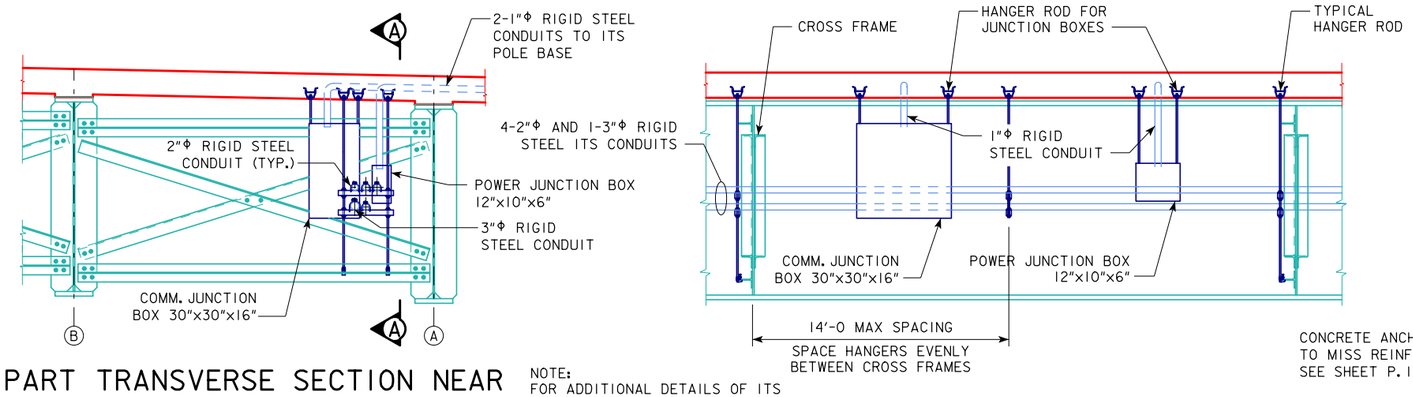

PART TRANSVERSE SECTION NEAR STA. 6784+10

LOOKING UPSTATION

NOTE:
FOR ADDITIONAL DETAILS OF ITS CONDUIT AND HANGER RODS SEE TRANSVERSE SECTIONS ON DESIGN SHEETS 144-147.

CAP AND SEAL ALL EXPOSED CONDUIT FOR FUTURE CONNECTION.

SECTION A-A

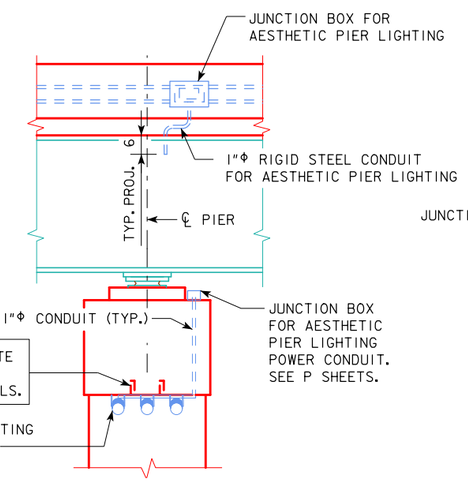

SEPARATION RAIL PARTIAL ELEVATION AT PIER

(LOOKING EAST)

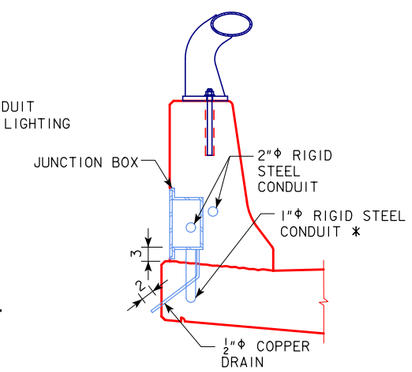

SECTION THRU BARRIER RAIL JUNCTION BOX

* FOR LIGHT POLES, AESTHETIC PIER LIGHTING, AND UNDERDECK LIGHTING (POLE BASE NOT SHOWN)

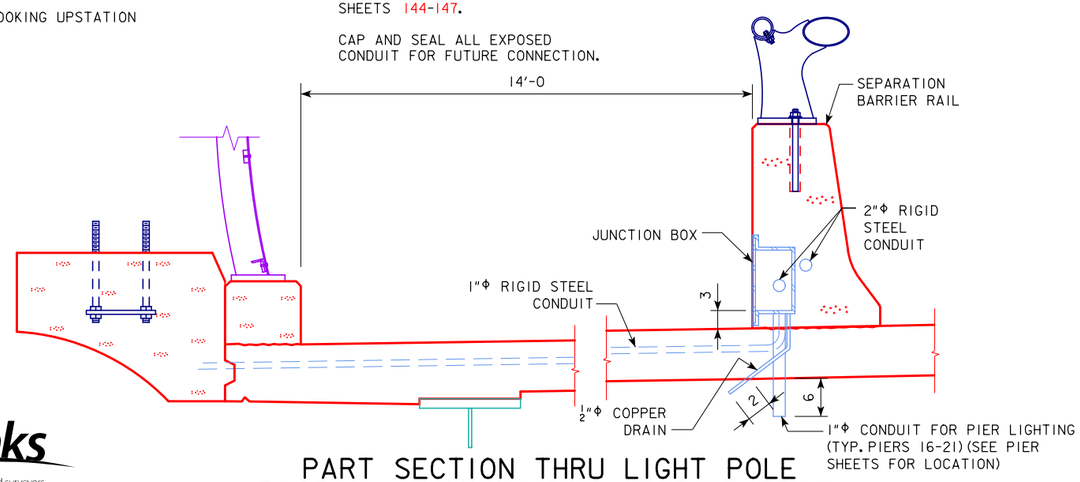

PART SECTION THRU LIGHT POLE BASE & JUNCTION BOX AT BIKE TRAIL

NOTES:

JUNCTION BOXES IN THE BARRIERS SHALL BE 1'-4 x 1'-4 x 8". MINIMUM SPACING BETWEEN JUNCTION BOXES SHALL BE 8'-0.

AESTHETIC PIER LIGHTING CONDUIT SHALL NOT ENTER THE ROADWAY LIGHT JUNCTION BOXES AND THE ROADWAY LIGHT CONDUIT SHALL NOT ENTER THE JUNCTION BOXES FOR THE AESTHETIC PIER LIGHTING CONDUIT.

JUNCTION BOXES FOR SPARE CONDUIT TO BE PLACED AT A MAXIMUM SPACING OF 300'-0, AND WITHIN 150'-0 OF ℄ PIER 16.

THE STEEL CONDUIT SHALL BE SECURELY TIED AT EVERY 3'-0 INTERSECTION WITH THE 5c1 BARS TO AVOID CONTACT WITH THE STAINLESS STEEL 5c2.

SEE P SHEETS IN THESE PLANS FOR ADDITIONAL DETAILS OF CONDUIT AND LIGHTING.

SEE N SHEETS IN THESE PLANS FOR ADDITIONAL ITS DETAILING.

whks
engineers + planners + land surveyors

DESIGN FOR VARIABLE SKEW (L.A.)

2271'-6 x VARI. CONTINUOUS WELDED GIRDER BRIDGE-EBL W/14' BIKE TRAIL

138'-10 & 151'-0 7/8 END SPANS MULTIPLE LENGTH INTERIOR SPANS

LIGHTING DETAILS

STA. 6792+60.93 - 52' LEFT ℄ I-74 OCTOBER, 2015

SCOTT COUNTY

IOWA DEPARTMENT OF TRANSPORTATION - HIGHWAY DIVISION

DESIGN SHEET NO. 228 OF 282 FILE NO. 30253 DESIGN NO. 3408

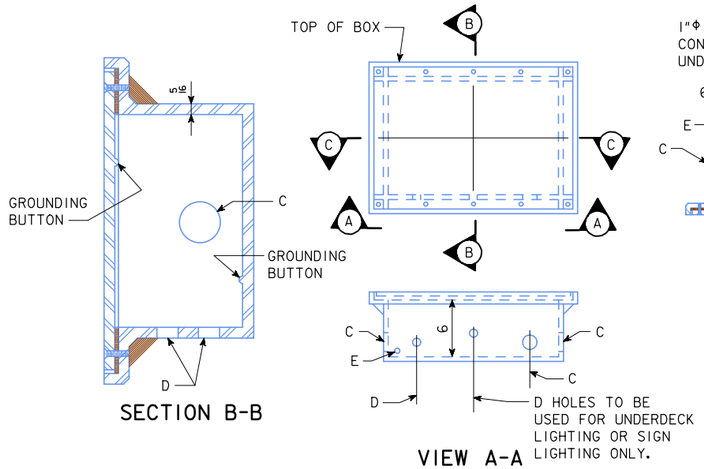

SECTION B-B

VIEW A-A

LI-104, TYPE I JUNCTION BOX

WATERTIGHT , CAST IRON - FLUSH MOUNT

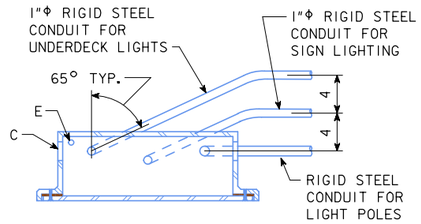

SECTION C-C

BOSSED FOR	HOLE	FOR CONDUIT SIZE
5 THREADS	✱C	2"Φ RIGID STEEL
NONE	D	1"Φ RIGID STEEL
NONE	E	$\frac{1}{2}$"Φ COPPER PIPE

NOTE:
THE GROUNDING BUTTONS ARE TO BE BLIND DRILLED AND TAPPED FOR $\frac{3}{8}$"Φ × 0'-0$\frac{3}{4}$ BOLTS.

✱ SIZE OF LIGHT POLE CONDUIT IS DEPENDENT ON LABELED SIZE SHOWN ON THIS SHEET (SEE ENCIRCLED NOTE FOR LIGHT POLE CONDUIT SIZE).

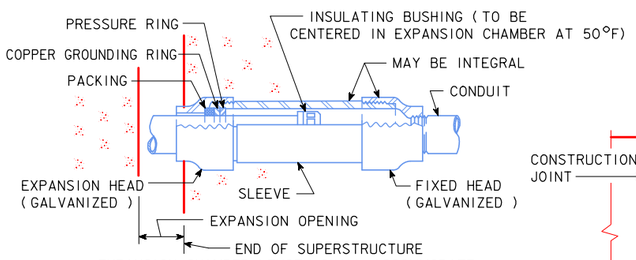

EXPANSION FITTING DETAIL

(14 REQUIRED)

NOTE:
SIMILAR EXPANSION FITTINGS FOR CONDUITS HANGING FROM THE BOTTOM OF THE DECK SHALL BE ATTACHED TO OR SUPPORTED BY THE SUPERSTRUCTURE TO COMPENSATE FOR THERMAL MOVEMENT AT PIERS 16, 21, 25, AND 28. SEE P SHEETS AND N SHEETS FOR DETAILS.

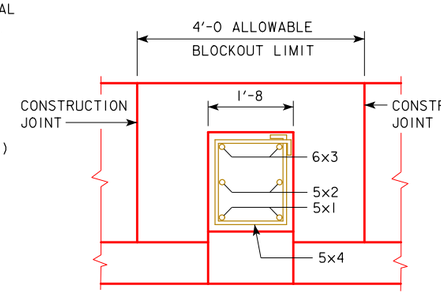

VIEW D-D

NOTE:
1"Φ RIGID STEEL CONDUIT SHALL BE USED FOR LIGHT POLES. 2-1" DIA. RIGID STEEL CONDUITS REQUIRED FOR ITS POLE BASE AT STA. 6784+10.0, SEE DESIGN SHEETS 225 AND 226 FOR DETAILS.

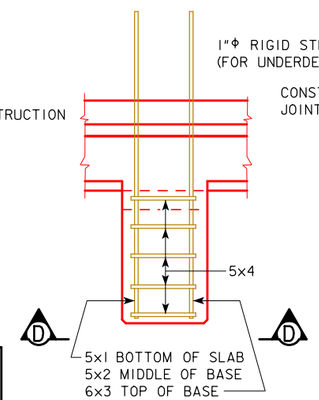

PLAN OF POLE BASE REINFORCING

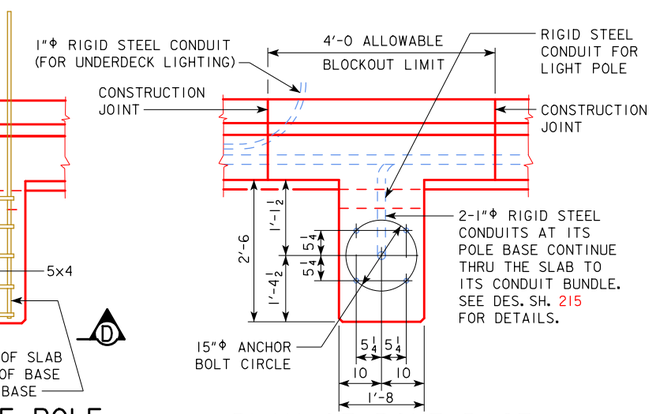

PLAN OF POLE BASE

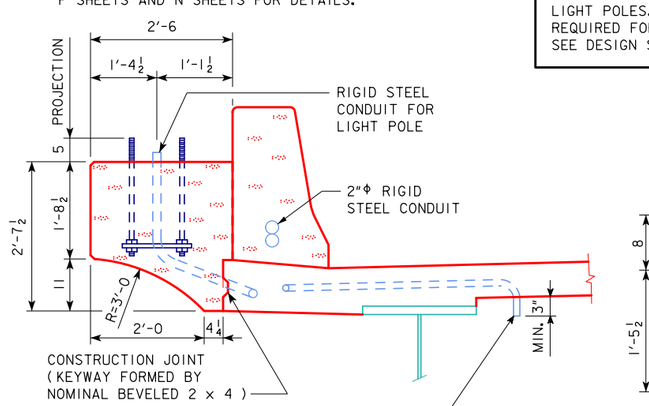

SECTION E-E

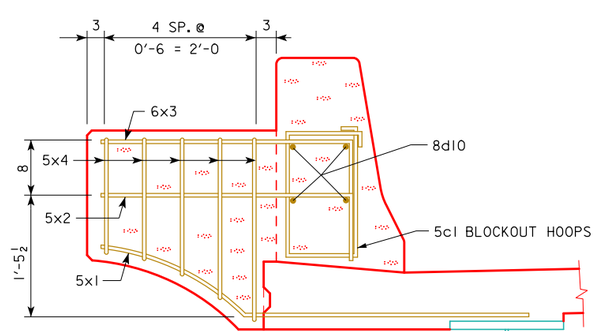

SECTION THROUGH BASE SHOWING REINFORCING

NOTE: BARRIER RAIL REINFORCING NOT SHOWN. REFER TO BARRIER RAIL SHEETS FOR BAR PLACEMENT.

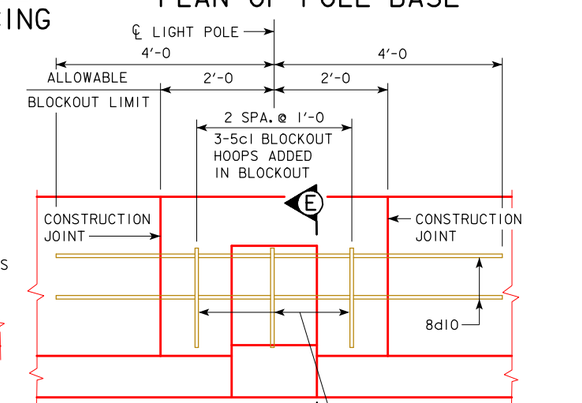

ELEVATION

NOTE: ANCHOR BOLTS NOT SHOWN.

LIGHTING NOTES:

SEE LI-104 STANDARD ROAD PLAN FOR ADDITIONAL INFORMATION ON JUNCTION BOXES.

CONSTRUCTION SHALL CONFORM TO THE CURRENT IOWA D.O.T. STANDARD AND SUPPLEMENTAL SPECIFICATIONS AND SPECIAL PROVISIONS.

CONDUIT INSTALLATION SHALL BE IN ACCORDANCE WITH ARTICLE 2523.03, N, OF THE STANDARD SPECIFICATIONS.

ALL "C" ENTRANCE HOLES IN JUNCTION BOXES SHALL BE DRILLED AND TAPPED FOR THE SPECIFIED CONDUIT SIZE. ALL OTHER HOLES SHALL HAVE A CONCRETE-TIGHT SLIP FIT. CONDUIT ENDS SHALL NOT PROTRUDE INTO JUNCTION BOX MORE THAN $\frac{1}{4}$". DRAIN PIPE END SHALL BE FLUSH WITH INSIDE SURFACE OF BOX. GROUNDING BUTTONS SHALL BE LOCATED APPROXIMATELY 3" FROM THE INSIDE SURFACE OF THE BOX WALL, AND NOT CLOSER THAN 3" TO THE EDGE OF ANY HOLE IN THE BOX FLOOR. HOLES FOR DRAIN PIPE SHALL BE PLACED IN THE LOW CORNER OF THE BOX, WITH A MINIMUM CLEARANCE OF 1" BETWEEN THE EDGE OF THE HOLE AND THE INSIDE SURFACE OF THE BOX WALL. TYPICAL DETAILS ARE SHOWN ON THIS SHEET.

COSTS ASSOCIATED WITH MATERIAL AND INSTALLATION OF CONDUIT, JUNCTION BOXES, FITTINGS, AND SUPPORT HARDWARE SHALL BE CONSIDERED INCIDENTAL TO THE BID ITEMS; "STRUCTURAL CONCRETE (BRIDGE)", "HIGH PERFORMANCE STRUCTURAL CONCRETE", "CONCRETE BARRIER RAILING", AND "HP SELF-CONSOLIDATING CONCRETE (HP-SCC)" AS OUTLINED IN THE BID ITEM REFERENCE INFORMATION ON DESIGN SHEET 2.

THE WEIGHT OF REINFORCING STEEL IS INCLUDED IN THE SUPERSTRUCTURE ESTIMATED QUANTITIES.

COST OF FURNISHING AND INSTALLING POLES, LIGHTS AND LIGHTING CONDUCTOR IS NOT A PART OF THIS CONTRACT.

EXPANSION FITTING SHALL BE AS SPECIFIED OR AS APPROVED BY THE ENGINEER. TYPICAL DETAILS ARE SHOWN ON THIS SHEET.

ALL COMPONENTS OF CONDUIT SYSTEM SHALL BE GALVANIZED UNLESS NOTED OTHERWISE.

ALL ANCHOR BOLT MATERIAL SHALL COMPLY WITH THE REQUIREMENTS OF IOWA DOT MATERIALS I.M. 453.08.

WELDING OF ANCHOR BOLTS SHALL NOT BE ALLOWED. THE CONTRACTOR SHALL OBTAIN A TEMPLATE FROM THE MANUFACTURER / FABRICATOR FOR PROPER PLACEMENT OF THE ANCHOR BOLTS.

ALL REINFORCING STEEL IS TO BE EPOXY COATED AND GRADE 60.

EPOXY REINFORCING STEEL- ONE BASE

BAR	LOCATION	SHAPE	NO.	LENGTH	WEIGHT
5x1	SLAB ANCHORS		2	5'-10	12
5x2	BASE ANCHOR		2	4'-1	9
6x3	BASE ANCHOR		2	4'-3	13
5x4	BASE HOOP		5	VARIES	39
5c1	BLOCKOUT HOOPS		3	5'-4	17
8d10	BLOCKOUT LONGITUDINAL		4	8'-0	85
(INCLUDED IN SUPERSTRUCTURE QTY'S)		TOTAL WEIGHT (LBS.)			175

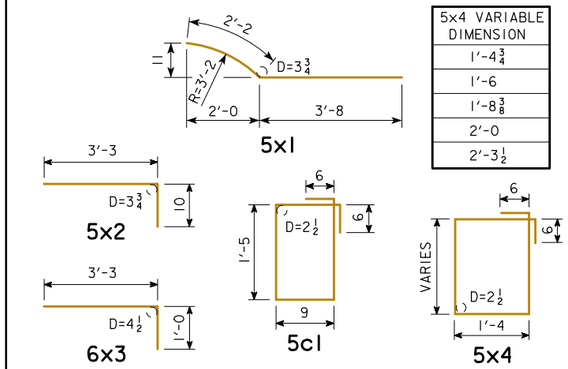

5x4 VARIABLE DIMENSION
1'-4$\frac{3}{4}$
1'-6
1'-8$\frac{3}{8}$
2'-0
2'-3$\frac{1}{2}$

NOTE: ALL DIMENSIONS ARE OUT TO OUT. D = PIN DIAMETER.

LIGHTING QUANTITIES (9 BASES)

ITEM	AMOUNT
STRUCTURAL CONCRETE (FOR INFORMATION ONLY)	7.2 C.Y.
REINFORCING STEEL - EPOXY COATED (INCLUDED IN SUPERSTRUCTURE QUANTITIES)	1575 LBS.

NOTES:

FOR LOCATION OF CONDUITS NEEDED SEE LIGHTING DETAILS ON DES. SHT 225.

QUANTITIES FOR REINFORCING STEEL FOR POLE BASES ARE INCLUDED IN THE SUPERSTRUCTURE QUANTITIES ON DESIGN SHEETS 168, 172, 176, & 180. CONCRETE QUANTITY INCLUDES 4'-0 RAIL BLOCKOUT AND BASE. COST OF CONCRETE IS INCLUDED IN THE BID ITEM FOR CONCRETE BARRIER RAIL. ANCHOR BOLTS AND PLATES TO BE INCLUDED IN PRICE BID FOR CONCRETE BARRIER RAIL.

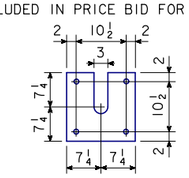

ANCHOR PLATE

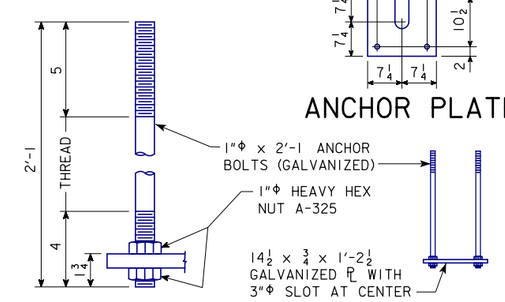

ANCHOR BOLTS

DESIGN FOR VARIABLE SKEW (L.A.)

2271'-6 x VARI. CONTINUOUS WELDED GIRDER BRIDGE-EBL W/14' BIKE TRAIL

138'-10 & 151'-0$\frac{7}{8}$ END SPANS MULTIPLE LENGTH INTERIOR SPANS

TYPE I LIGHT POLE BASE DETAILS

STA. 6792+60.93 - 52' LEFT ℄ I-74 OCTOBER, 2015

SCOTT COUNTY

IOWA DEPARTMENT OF TRANSPORTATION - HIGHWAY DIVISION

DESIGN SHEET NO. 229 OF 282 FILE NO. 30253 DESIGN NO. 3408

whks engineers + planners + land surveyors

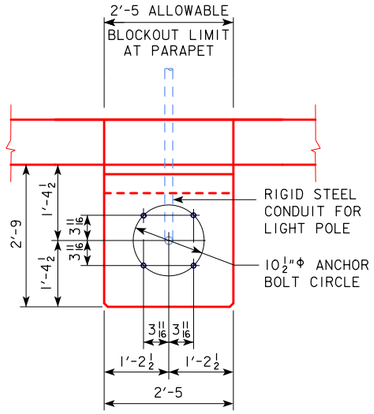

PLAN OF POLE BASE TYPE II

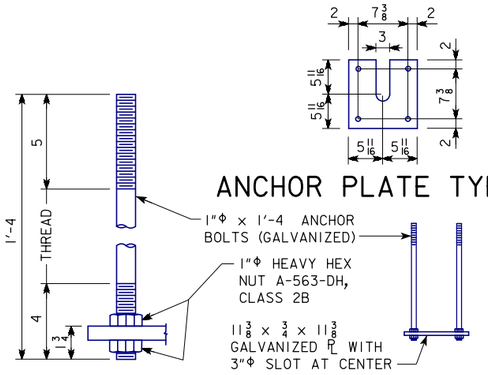

ANCHOR BOLTS TYPE II

ANCHOR PLATE TYPE II

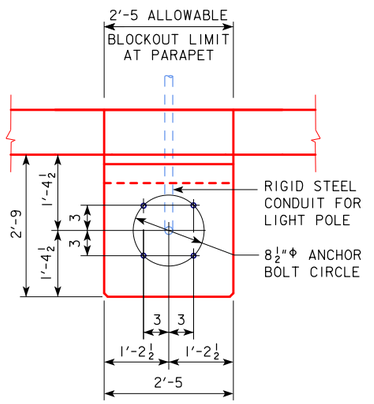

PLAN OF POLE BASE TYPE III

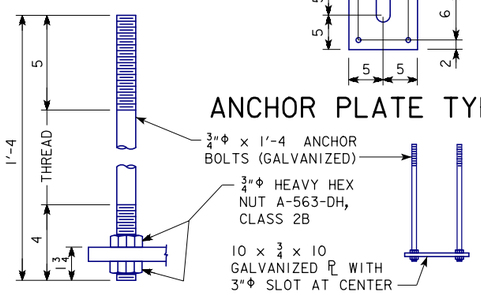

ANCHOR BOLTS TYPE III

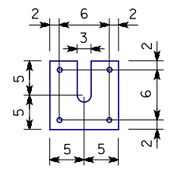

ANCHOR PLATE TYPE III

NOTE:
1"Φ RIGID STEEL CONDUIT SHALL BE USED FOR LIGHT POLES.

LIGHTING NOTES:

SEE TYPE I LIGHTING DETAILS SHEET FOR ADDITIONAL INFORMATION RELATED TO JUNCTION BOXES AND EXPANSION FITTINGS.

CONSTRUCTION SHALL CONFORM TO THE CURRENT IOWA D.O.T. STANDARD AND SUPPLEMENTAL SPECIFICATIONS AND SPECIAL PROVISIONS.

CONDUIT INSTALLATION SHALL BE IN ACCORDANCE WITH ARTICLE 2523.03, N, OF THE STANDARD SPECIFICATIONS.

THE RIGID STEEL CONDUIT, JUNCTION BOXES AND FITTINGS INCLUDING LABOR AND ANY ADDITIONAL WORK TO DO THE INSTALLATION IS CONSIDERED INCIDENTAL TO THE COST OF THE RAILING.

THE WEIGHT OF REINFORCING STEEL IS INCLUDED IN THE SUPERSTRUCTURE ESTIMATED QUANTITIES.

COST OF FURNISHING AND INSTALLING POLES, LIGHTS AND LIGHTING CONDUCTOR IS NOT A PART OF THIS CONTRACT.

ALL ANCHOR BOLT MATERIAL SHALL COMPLY WITH THE REQUIREMENTS OF IOWA DOT MATERIALS I.M. 453.08.

WELDING OF ANCHOR BOLTS SHALL NOT BE ALLOWED. THE CONTRACTOR SHALL OBTAIN A TEMPLATE FROM THE MANUFACTURER / FABRICATOR FOR PROPER PLACEMENT OF THE ANCHOR BOLTS.

ALL REINFORCING STEEL IS TO BE EPOXY COATED AND GRADE 60.

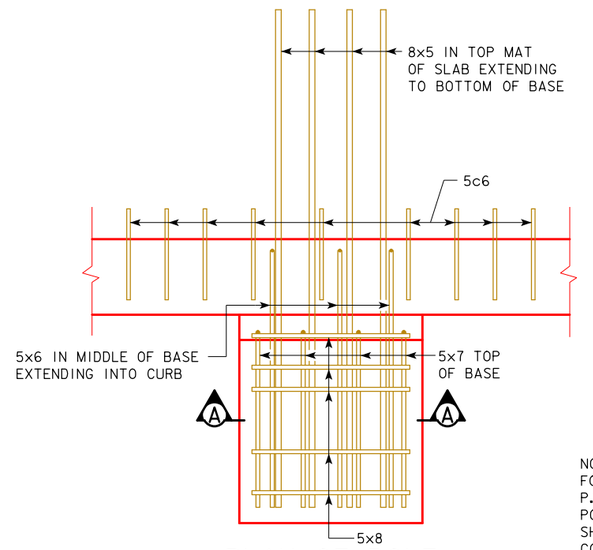

PLAN OF POLE BASE REINFORCING

EPOXY REINFORCING STEEL- ONE BASE

BAR	LOCATION	SHAPE	NO.	LENGTH	WEIGHT
8x5	SLAB ANCHOR		4	9'-4	100
5x6	CURB ANCHOR		3	4'-8	15
5x7	BASE TOP BAR		4	3'-2	13
5x8	BASE HOOP		5	VARIES	40
5x9	SLAB ANCHOR		4	5'-0	21
(INCLUDED IN SUPERSTRUCTURE QTY'S)		TOTAL WEIGHT (LBS.)			189

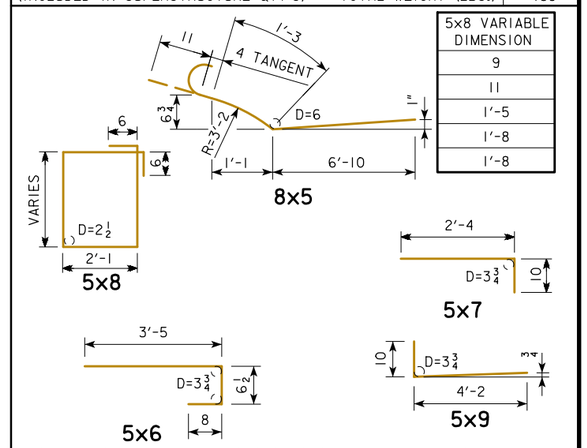

5x8 VARIABLE DIMENSION
9
11
1'-5
1'-8
1'-8

NOTE: ALL DIMENSIONS ARE OUT TO OUT. D = PIN DIAMETER.

LIGHTING QUANTITIES (2 BASES)

ITEM	AMOUNT
STRUCTURAL CONCRETE (FOR INFORMATION ONLY)	1.0 C.Y.
REINFORCING STEEL - EPOXY COATED (INCLUDED IN SUPERSTRUCTURE QUANTITIES)	378 LBS.

NOTE:
FOR LOCATION OF CONDUITS NEEDED SEE LIGHTING DETAILS SHEETS P.1-P.25, P.30, P.31 AND DESIGN SHEET 225. QUANTITIES FOR REINFORCING STEEL FOR POLE BASES ARE INCLUDED IN THE SUPERSTRUCTURE QUANTITIES ON DESIGN SHEET 168 . CONCRETE QUANTITY INCLUDES 2'-5 CURB BLOCKOUT AND BASE. COST OF CONCRETE IS INCLUDED IN THE BID ITEM FOR CONCRETE PARAPET, FENCE. ANCHOR BOLTS AND PLATES TO BE INCLUDED IN PRICE BID FOR CONCRETE PARAPET, FENCE.

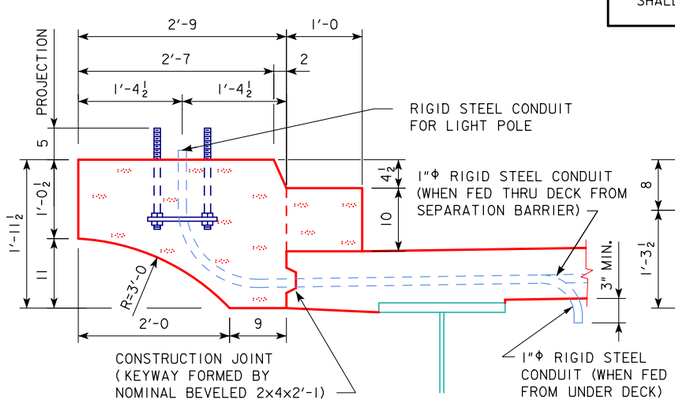

SECTION D-D

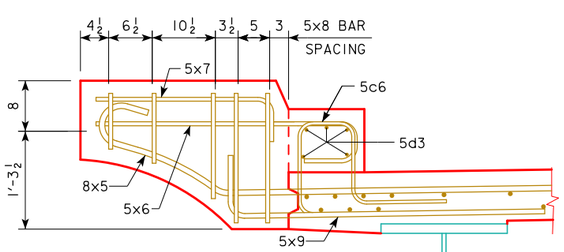

SECTION THROUGH BASE SHOWING REINFORCING

NOTE: CONCRETE PARAPET, FENCE REINFORCING SHOWN FOR INFORMATION ONLY. REFER TO CONCRETE PARAPET, FENCE SHEETS FOR BAR PLACEMENT. TRANSVERSE DECK REINFORCING NOT SHOWN. LONGITUDINAL DECK REINFORCING SHOWN FOR INFORMATION ONLY. REFER TO DECK REINFORCING SHEET FOR BAR PLACEMENT.

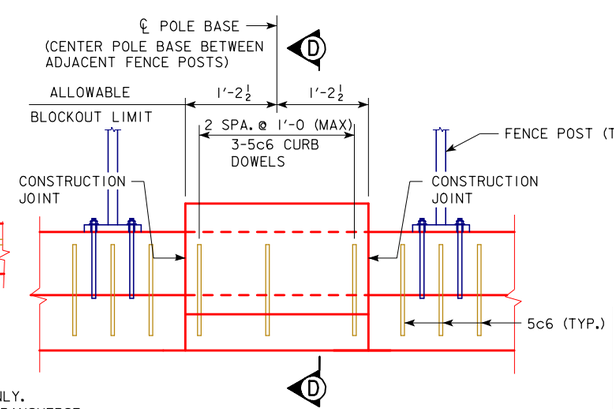

ELEVATION

NOTE: ANCHOR POLE BOLTS NOT SHOWN.

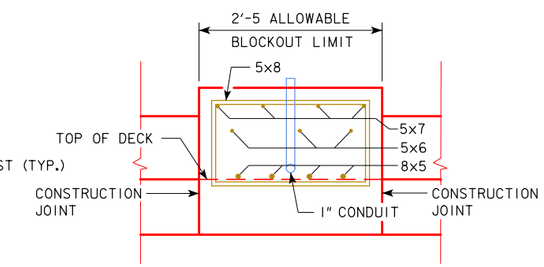

SECTION A-A

whks
engineers + planners + land surveyors

DESIGN FOR VARIABLE SKEW (L.A.)

2271'-6 x VARI. CONTINUOUS WELDED GIRDER BRIDGE-EBL W/14' BIKE TRAIL

138'-10 & 151'-0 7/8 END SPANS MULTIPLE LENGTH INTERIOR SPANS

TYPE II & III LIGHT POLE BASE

STA. 6792+60.93 - 52' LEFT ℄ I-74 OCTOBER, 2015

SCOTT COUNTY

IOWA DEPARTMENT OF TRANSPORTATION - HIGHWAY DIVISION

DESIGN SHEET NO. 230 OF 282 FILE NO. 30253 DESIGN NO. 3408

DESIGN TEAM CF / LG / JP | SCOTT COUNTY | PROJECT NUMBER BRFIM-074-1(200)5--05-82 | SHEET NUMBER 231

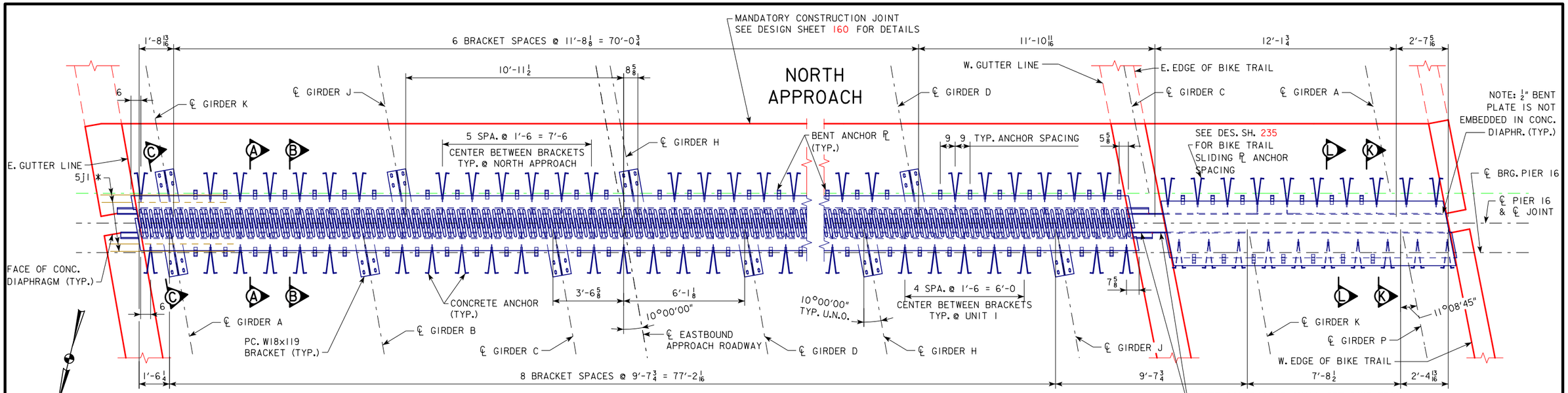

* (4) 5j1 BARS TO BE INCLUDED WITH UNIT I SUPERSTRUCTURE QUANTITIES.

FINGER JOINT PLAN
EB PIER 16

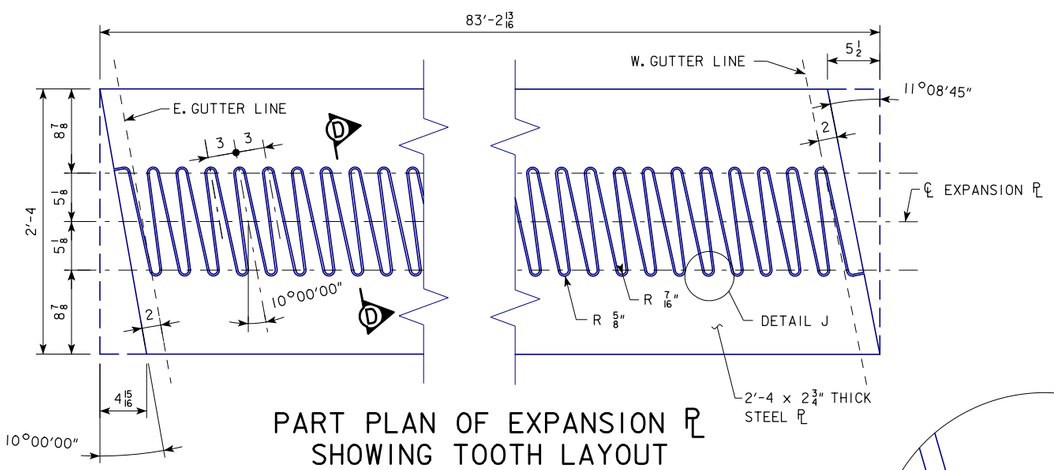

PART PLAN OF EXPANSION PL SHOWING TOOTH LAYOUT

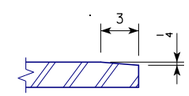

SECTION D-D

NOTE: TOP OF EXPANSION DEVICE IS TO BE PARALLEL TO GRADE. FLAME CUT FROM 2'-4 x 2 3/4" PL. BEVEL EACH TOOTH 1/4" x 3".

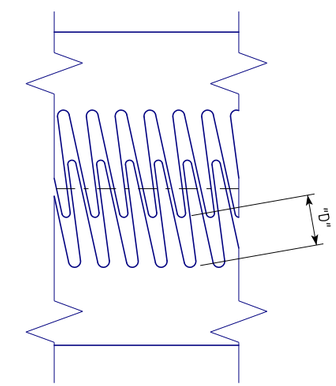

JOINT SETTING DETAIL

FINGER JOINT SETTINGS

TEMPERATURE	JOINT SETTING "D"
10°	7 1/2
15°	7 1/4
20°	6 15/16
25°	6 11/16
30°	6 7/16
35°	6 3/16
40°	5 7/8
45°	5 5/8
50°	5 3/8
55°	5 1/16
60°	4 13/16
65°	4 9/16
70°	4 5/16
75°	4
80°	3 3/4
85°	3 1/2
90°	3 1/4

NOTE: TEMPERATURES SHOWN ARE CONCRETE DECK TEMPERATURES ON THE UNDERSIDE OR SHADED PORTION OF THE DECK.

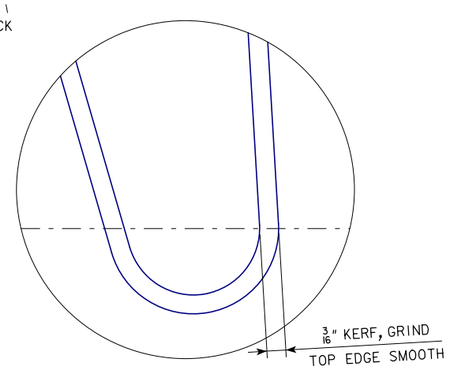

DETAIL J

NOTES:
BARRIER RAIL NOT SHOWN.

SEE DES. SH. 263 FOR FINGER JOINT NOTES.

SEE DES. SH. 232 FOR SECTIONS A-A, B-B, AND C-C.

SEE DES. SH. 148 FOR CONCRETE END DIAPHRAGM DETAIL.

SEE DES. SH. 233 FOR SECTIONS K-K AND L-L.

whks
engineers + planners + land surveyors

NOTE: DIMENSIONS ON THIS PLAN ARE HORIZONTAL ONLY.
SEE ACTUAL PLATE SIZES BELOW THAT ARE ALONG CROSS SLOPE.

DESIGN FOR VARIABLE SKEW (L.A.)

2271'-6 x VARI. CONTINUOUS WELDED GIRDER BRIDGE-EBL W/14' BIKE TRAIL

138'-10 & 151'-0 7/8 END SPANS MULTIPLE LENGTH INTERIOR SPANS

FINGER JOINT DTLS. - EB JT. 16

STA. 6792+60.93 - 52' LEFT ℄ I-74 OCTOBER, 2015

SCOTT COUNTY

IOWA DEPARTMENT OF TRANSPORTATION - HIGHWAY DIVISION

DESIGN SHEET NO. 231 OF 282 FILE NO. 30253 DESIGN NO. 3408

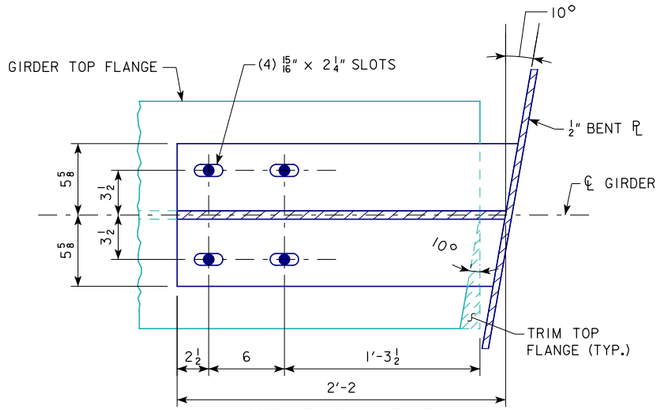

SECTION E-E

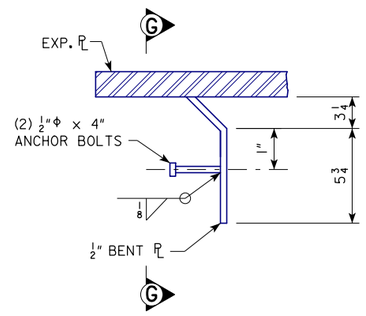

ELEVATION OF 1/2" BENT PL UNDER BARRIER RAIL

(NORMAL TO ℄ JOINT)

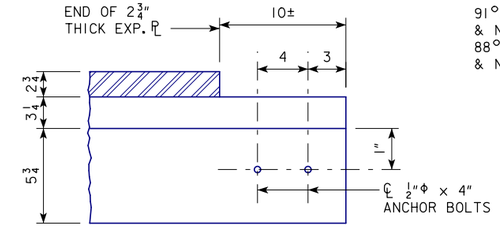

SECTION G-G

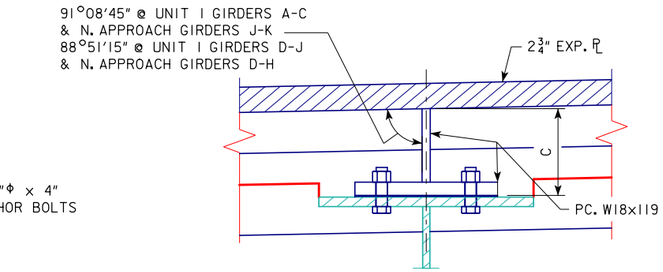

SECTION F-F

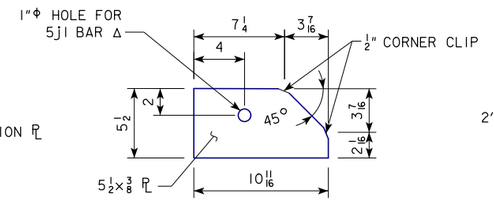

ANCHOR PL DETAIL

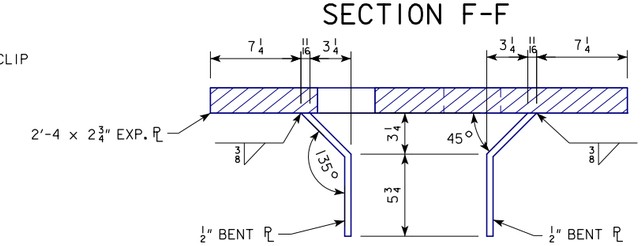

TYPICAL SECTION OF EXPANSION DEVICE NORMAL TO ℄ JOINT

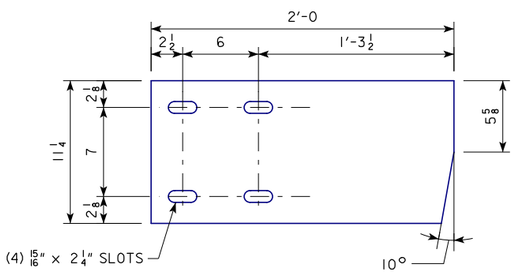

PLAN VIEW OF SHIMS

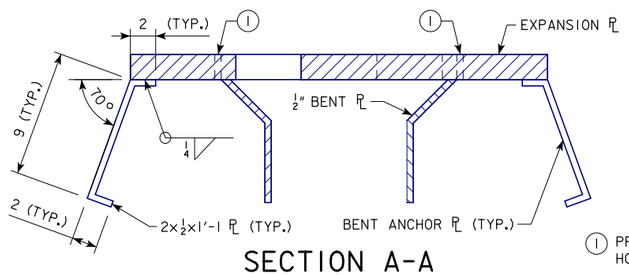

SECTION A-A

1 PROVIDE 3/4"Φ AIR BLEED VENT HOLES @ 1'-6 CENTERS.

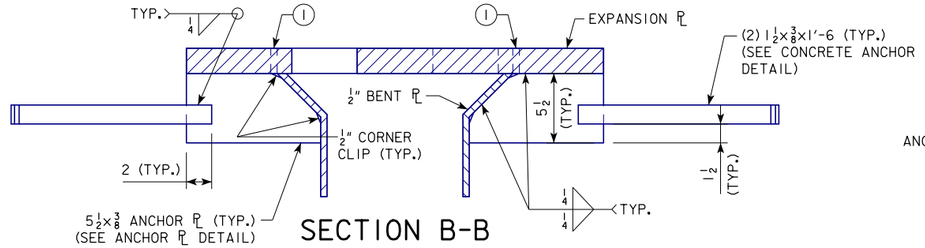

SECTION B-B

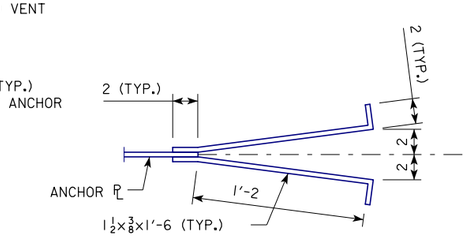

CONCRETE ANCHOR DETAIL

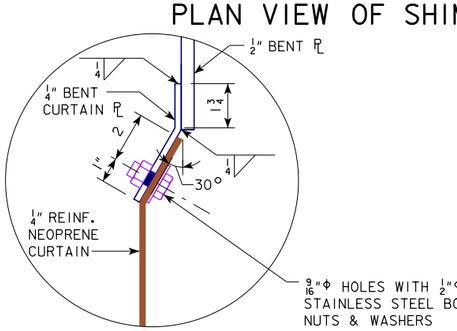

DETAIL H

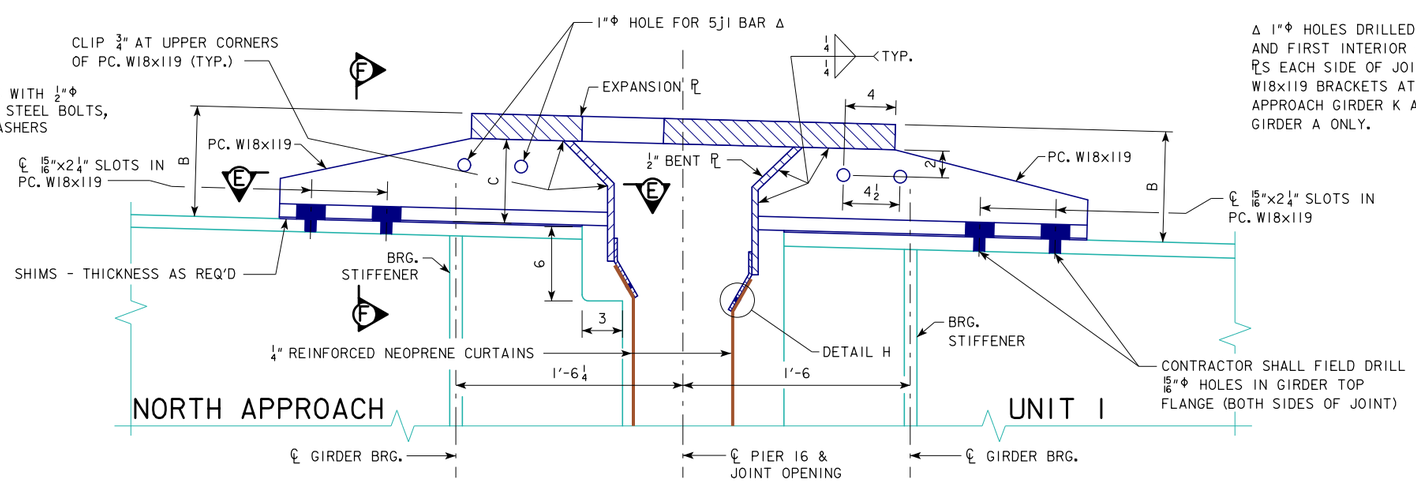

SECTION C-C (ALONG ℄ GIRDER)

Δ 1"Φ HOLES DRILLED IN EXTERIOR AND FIRST INTERIOR 5 1/2x3/8 ANCHOR PLS EACH SIDE OF JOINT AND PC. W18x119 BRACKETS AT NORTH APPROACH GIRDER K AND UNIT I GIRDER A ONLY.

TABLE OF DIMENSIONS

NORTH APPROACH	DIMENSION B	DIMENSION C
GIRDER D	11	7 3/4
GIRDER E	11	7 3/4
GIRDER F	11	7 3/4
GIRDER G	11	7 3/4
GIRDER H	11	7 3/4
GIRDER J	11	7 3/4
GIRDER K	11	7 3/4
UNIT I	**DIMENSION B**	**DIMENSION C**
GIRDER A	8 7/8	5 5/8
GIRDER B	8 3/4	5 1/2
GIRDER C	8 3/4	5 1/2
GIRDER D	8 3/4	5 1/2
GIRDER E	8 3/4	5 1/2
GIRDER F	8 3/4	5 1/2
GIRDER G	8 3/4	5 1/2
GIRDER H	8 3/4	5 1/2
GIRDER J	8 1/2	5 1/4

NOTES:

SEE DESIGN SHEETS 235-236 FOR NEOPRENE CURTAIN AND TROUGH DETAILS.

CONTRACTOR SHALL PROVIDE SHIM PACK CONSISTING OF 1/8" AND 1/4" SHIMS TOTALING 1" THICKNESS FOR EACH GIRDER. ALL SHIMS MAY NOT BE USED.

FINGER JOINT EXPANSION PLATE IS TO BE RECESSED 1/4" BELOW TOP OF SLAB.

NOTES:

SEE DES. SH. 263 FOR FINGER JOINT NOTES.

SEE DES. SH. 231 FOR LOCATION OF SECTIONS A-A, B-B AND C-C.

SEE DES. SH. 148 FOR CONCRETE END DIAPHRAGM DETAIL.

whks
engineers + planners + land surveyors

DESIGN FOR VARIABLE SKEW (L.A.)

2271'-6 x VARI. CONTINUOUS WELDED GIRDER BRIDGE-EBL W/14' BIKE TRAIL

138'-10 & 151'-0 7/8 END SPANS MULTIPLE LENGTH INTERIOR SPANS

FINGER JOINT DTLS. - EB JT. 16

STA. 6792+60.93 - 52' LEFT ℄ I-74 OCTOBER, 2015

SCOTT COUNTY

IOWA DEPARTMENT OF TRANSPORTATION - HIGHWAY DIVISION

DESIGN SHEET NO. 232 OF 282 FILE NO. 30253 DESIGN NO. 3408

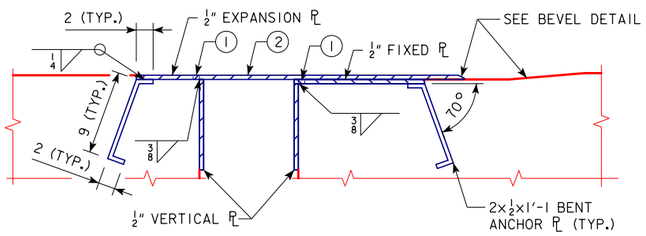

SECTION L-L

1. PROVIDE 3/4"Φ AIR BLEED VENT HOLES @ 1'-6 CENTERS.
2. NON-SKID TEXTURE ON EXPANSION PLATE SHALL MEET THE REQUIREMENTS OF ASTM A786 WITH RAISED FIGURES. FIGURES SHALL BE ANGULAR. ROUNDED FIGURES WILL NOT BE ACCEPTED.

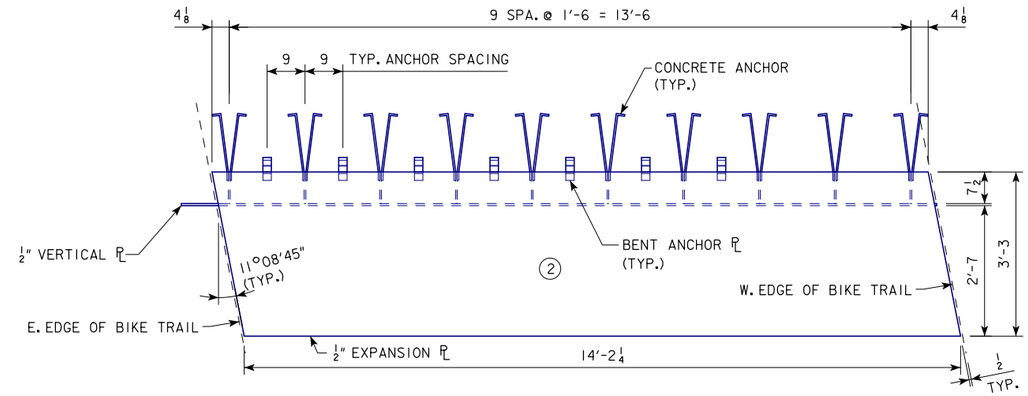

BIKE TRAIL EXPANSION PL

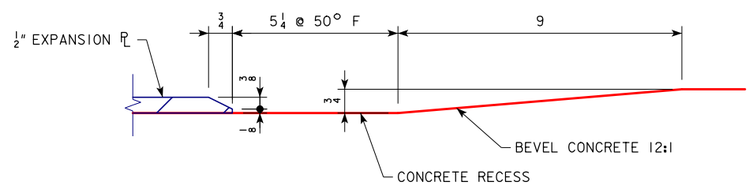

BEVEL DETAIL

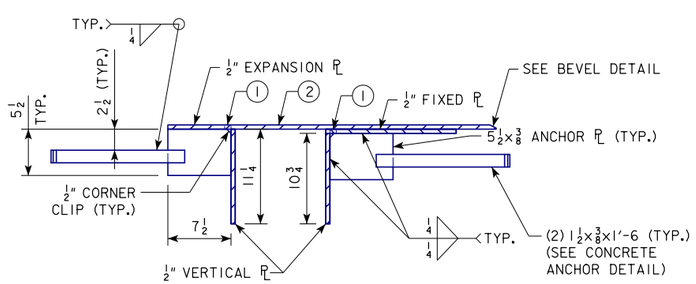

SECTION K-K

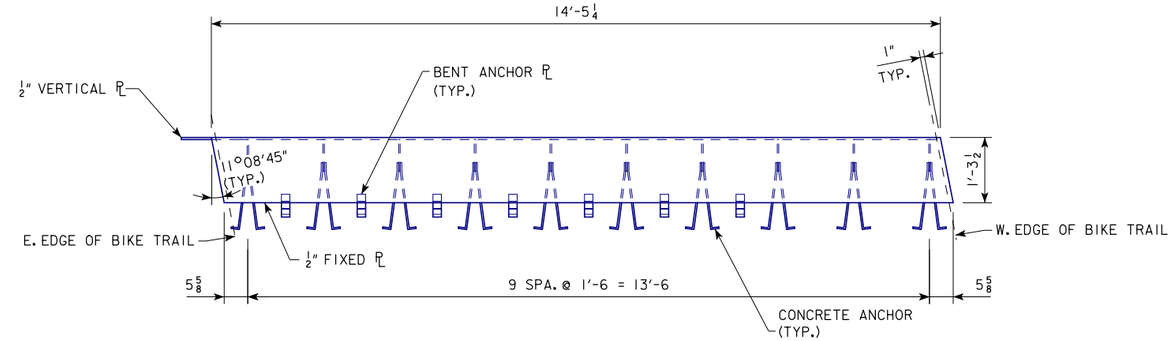

BIKE TRAIL FIXED PL

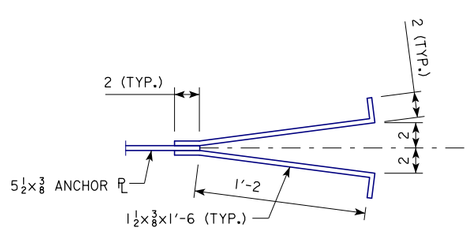

CONCRETE ANCHOR DETAIL

NOTES:

SEE DES. SH. 263 FOR FINGER JOINT NOTES.

SEE DES. SH. 231 FOR LOCATION OF SECTIONS K-K AND L-L.

SEE DES. SH. 148 FOR CONCRETE END DIAPHRAGM DETAIL.

BIKE TRAIL EXPANSION PL SHALL BE RECESSED 1/4" BELOW SLAB.

whks
engineers + planners + land surveyors

DESIGN FOR VARIABLE SKEW (L.A.)

2271'-6 x VARI. CONTINUOUS WELDED GIRDER BRIDGE-EBL W/14' BIKE TRAIL

138'-10 & 151'-0 7/8 END SPANS MULTIPLE LENGTH INTERIOR SPANS

FINGER JOINT DTLS. - EB JT. 16

STA. 6792+60.93 - 52' LEFT ℄ I-74 OCTOBER, 2015

SCOTT COUNTY

IOWA DEPARTMENT OF TRANSPORTATION - HIGHWAY DIVISION

DESIGN SHEET NO. 233 OF 282 FILE NO. 30253 DESIGN NO. 3408

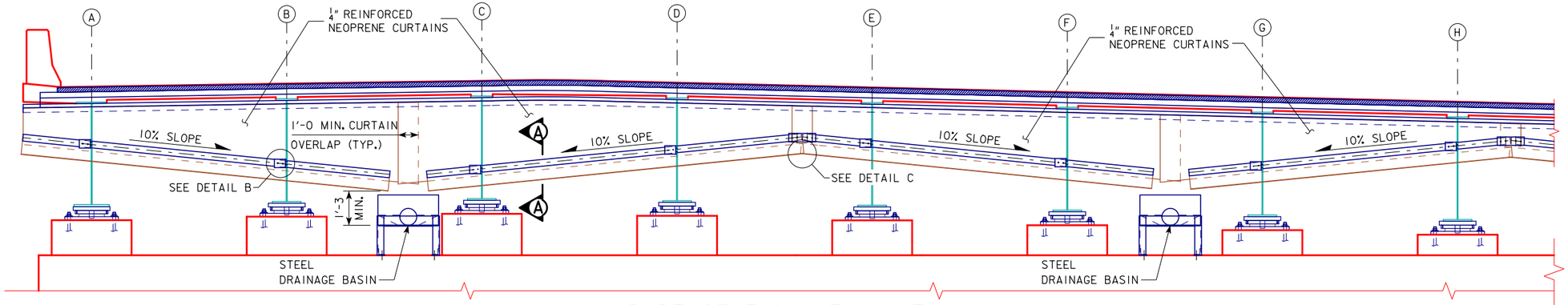

PART SECTION AT JOINT 16

(SHOWING UNIT 1, LOOKING DOWNSTATION NORMAL TO ℄ PIER)

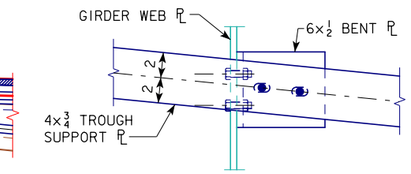

DETAIL B

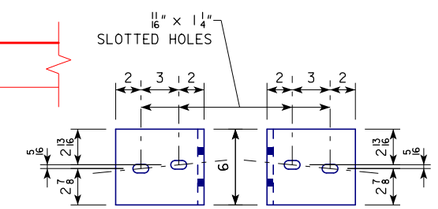

DETAIL OF 6x1/2 BENT PLS

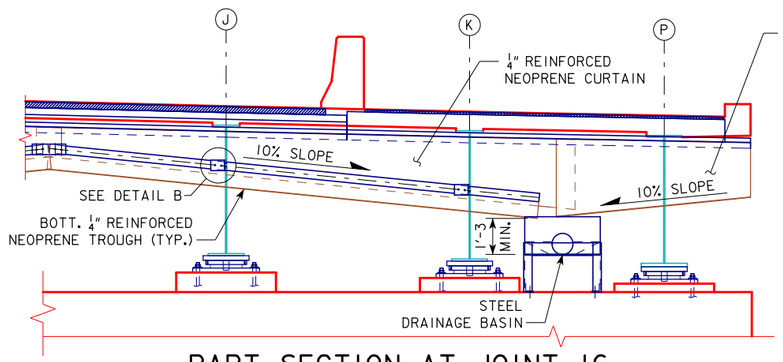

PART SECTION AT JOINT 16

(SHOWING UNIT 1, LOOKING DOWNSTATION NORMAL TO ℄ PIER)

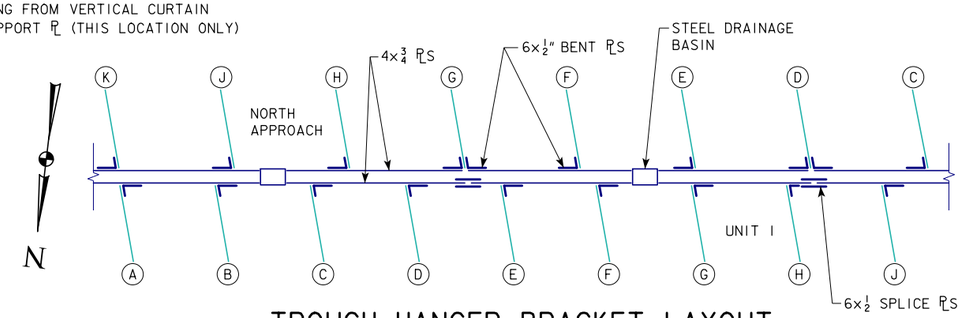

TROUGH HANGER BRACKET LAYOUT

SHOWING ORIENTATION OF 6x1/2" BENT PLS

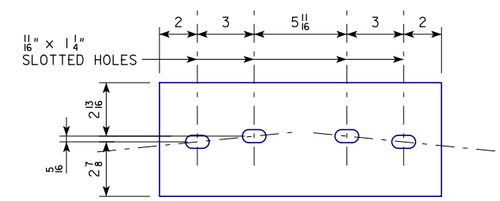

DETAIL OF 6x1/2 SPLICE PL

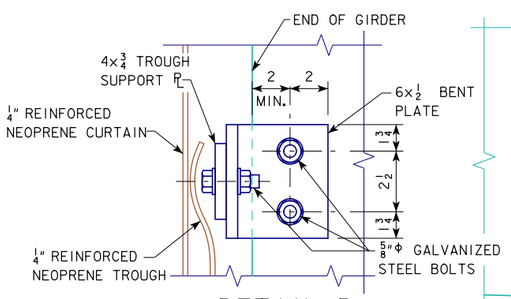

DETAIL D

NOTE:
NEOPRENE TROUGH IS ATTACHED TO THE 4x3/4 TROUGH PL ONLY AND DOES NOT BOLT TO THE 6x1/2 BENT PL.

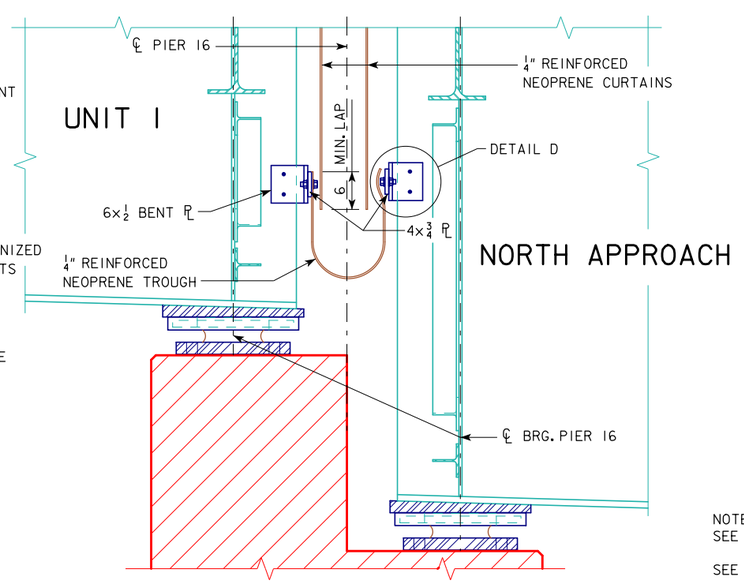

SECTION A-A

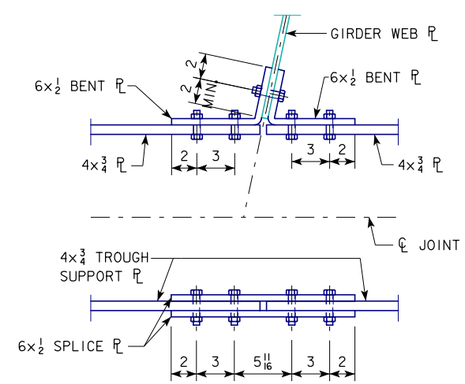

PLAN OF TROUGH PL CONNECTION AT APPROACH GIRDERS D & G

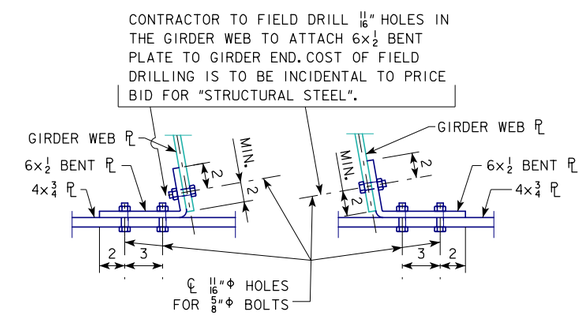

PLAN OF TROUGH PL CONNECTION TYPES

NOTES:
SEE DESIGN SHEET 275 FOR DETAILS OF STEEL DRAINAGE BASIN.

SEE DESIGN SHEET 235 FOR DETAIL C.

STEEL TRAFFIC RAILING AND PEDESTRIAN FENCE NOT SHOWN.

whks
engineers + planners + land surveyors

DESIGN FOR VARIABLE SKEW (L.A.)

2271'-6 x VARI. CONTINUOUS WELDED GIRDER BRIDGE-EBL W/14' BIKE TRAIL

138'-10 & 151'-0 7/8 END SPANS MULTIPLE LENGTH INTERIOR SPANS

JT. DRAINAGE DTLS. - EB JT. 16

STA. 6792+60.93 - 52' LEFT ℄ I-74 OCTOBER, 2015

SCOTT COUNTY

IOWA DEPARTMENT OF TRANSPORTATION - HIGHWAY DIVISION

DESIGN SHEET NO. 234 OF 282 FILE NO. 30253 DESIGN NO. 3408

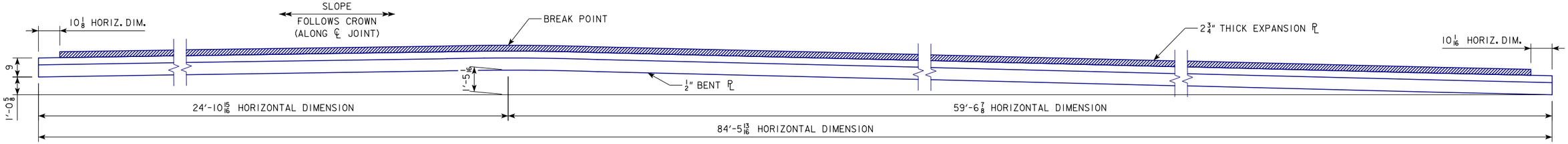

VIEW OF FINGER JOINT PLATE ASSEMBLY

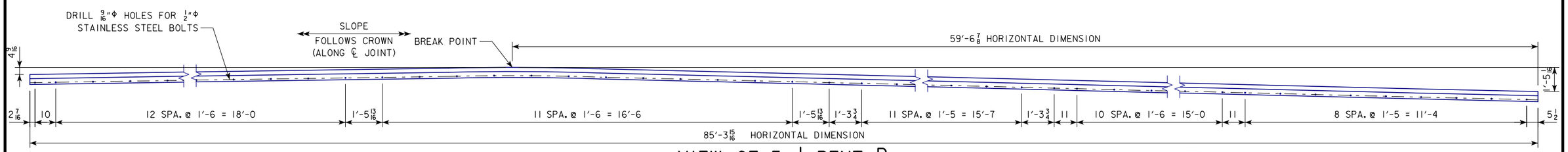

VIEW OF 5x1/4 BENT PL
(SEE DETAIL H ON DES. SH. 235 FOR DETAIL)

NOTES:

THE CONTRACTOR HAS THE OPTION OF CUTTING THE EXPANSION PL AT THE BREAK POINT TO ACCOUNT FOR THE CROSS SLOPE TRANSITION. A 1/2" GROOVE WELD SHALL BE USED ALL AROUND THE EXPANSION PL AND A 1/4" GROOVE WELD SHALL BE USED ALL AROUND THE 1/2" BENT PL TO CONNECT THE PLS TOGETHER. ALL SURFACES NOT IN CONTACT WITH CONCRETE ARE TO BE GROUND FLUSH.

ALL VIEWS LOOKING DOWNSTATION NORMAL TO ℄ JOINT.

SEE DESIGN SHEET 250 FOR REINFORCED NEOPRENE NOTES.

SEE DESIGN SHEET 234 FOR LOCATION OF DETAIL C.

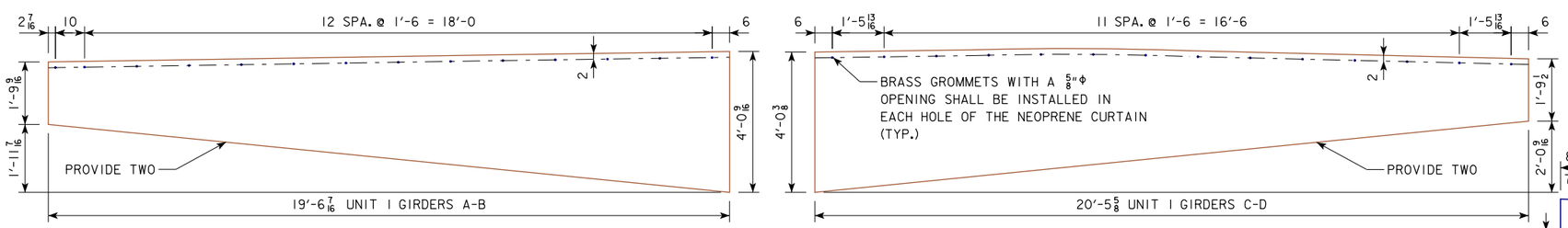

ELEVATION VIEW - REINFORCED NEOPRENE CURTAIN

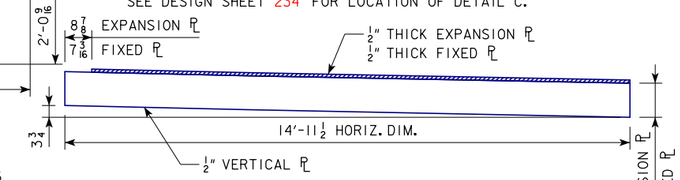

VIEW OF BIKE TRAIL
SLIDING PL ASSEMBLY

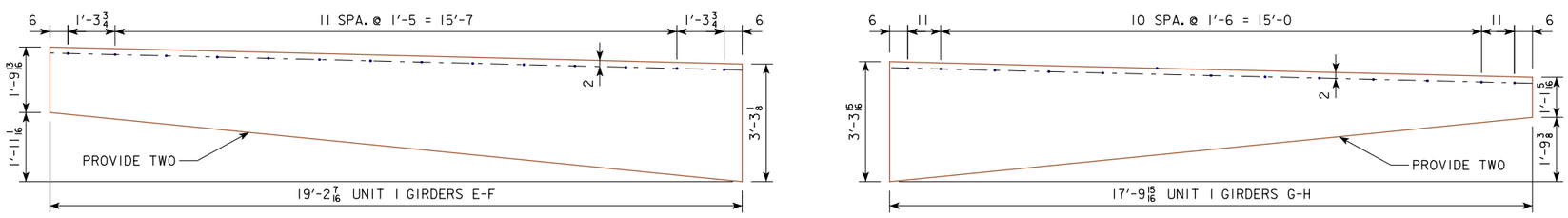

ELEVATION VIEW - REINFORCED NEOPRENE CURTAIN

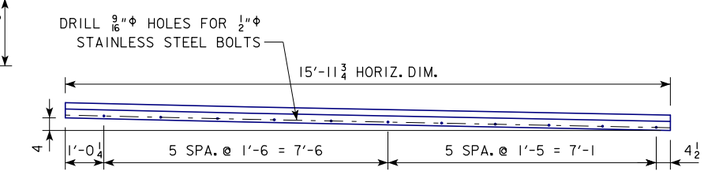

VIEW OF 5x1/4 BENT PL @ BIKE TRAIL
(SEE DETAIL H ON DES. SH. 232 FOR DETAIL)

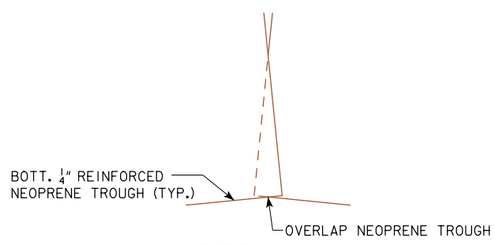

DETAIL C

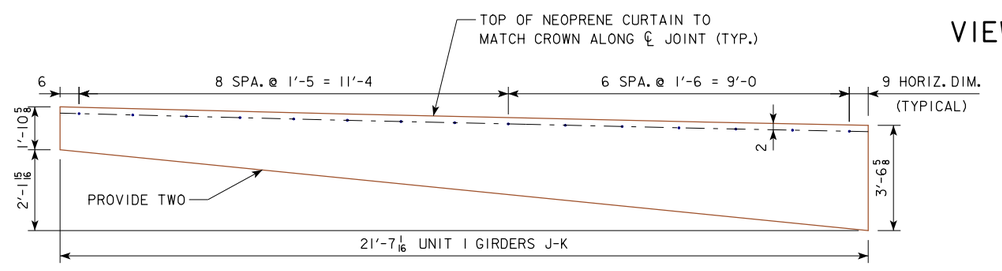

ELEVATION VIEW - REINFORCED NEOPRENE CURTAIN

whks
engineers + planners + land surveyors

DESIGN FOR VARIABLE SKEW (L.A.)

2271'-6 x VARI. CONTINUOUS WELDED GIRDER BRIDGE-EBL W/14' BIKE TRAIL

138'-10 & 151'-0 7/8 END SPANS MULTIPLE LENGTH INTERIOR SPANS

JT. DRAINAGE DTLS. - EB JT. 16

STA. 6792+60.93 - 52' LEFT ℄ I-74 OCTOBER, 2015

SCOTT COUNTY

IOWA DEPARTMENT OF TRANSPORTATION - HIGHWAY DIVISION

DESIGN SHEET NO. 235 OF 282 FILE NO. 30253 DESIGN NO. 3408

UNIT I GIRDERS A-B & APPROACH GIRDERS J-K

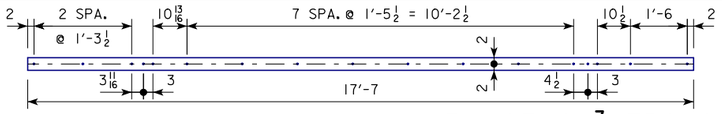

VIEW OF 4x3/4 TROUGH SUPPORT ℙ AT NORTH APPROACH

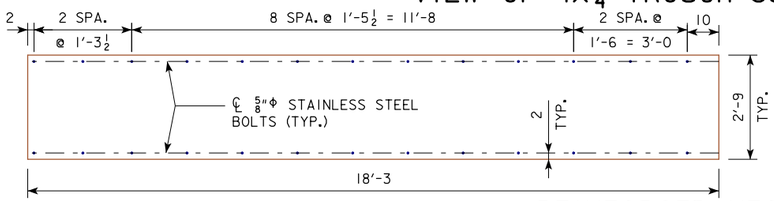

REINFORCED NEOPRENE TROUGH LAYOUT

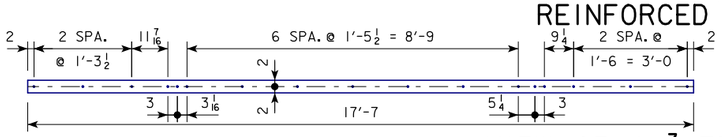

VIEW OF 4x3/4 TROUGH SUPPORT ℙ AT UNIT I

UNIT I GIRDERS C-D & APPROACH GIRDERS G-H

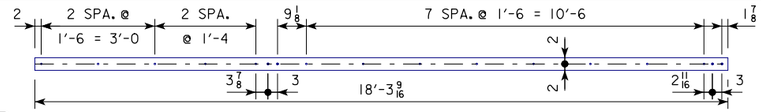

VIEW OF 4x3/4 TROUGH SUPPORT ℙ AT NORTH APPROACH

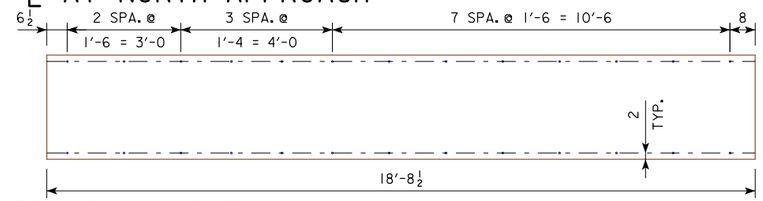

REINFORCED NEOPRENE TROUGH LAYOUT

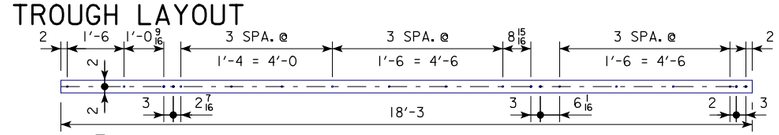

VIEW OF 4x3/4 TROUGH SUPPORT ℙ AT UNIT I

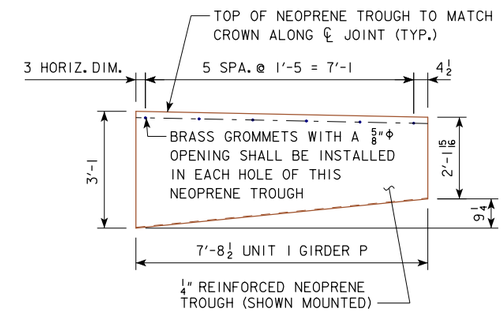

ELEVATION VIEW - REINFORCED NEOPRENE TROUGH

UNIT I GIRDERS E-F & APPROACH GIRDERS F-G

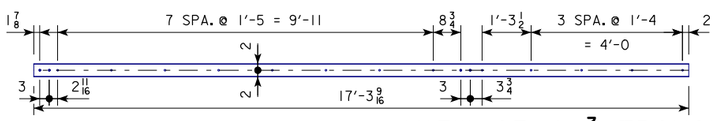

VIEW OF 4x3/4 TROUGH SUPPORT ℙ AT NORTH APPROACH

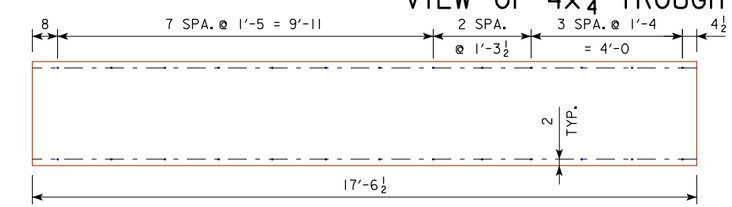

REINFORCED NEOPRENE TROUGH LAYOUT

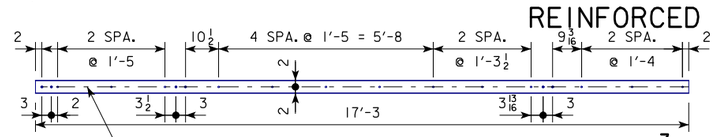

VIEW OF 4x3/4 TROUGH SUPPORT ℙ AT UNIT I

UNIT I GIRDERS G-H & APPROACH GIRDERS D-E

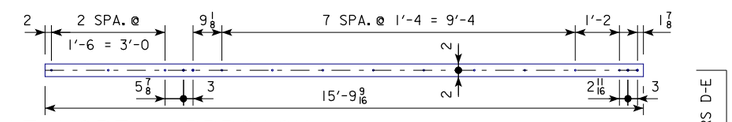

VIEW OF 4x3/4 TROUGH SUPPORT ℙ AT NORTH APPROACH

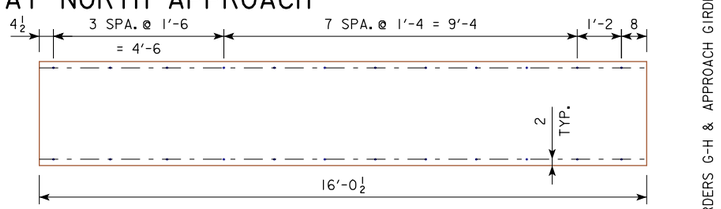

REINFORCED NEOPRENE TROUGH LAYOUT

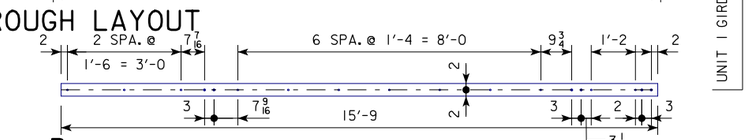

VIEW OF 4x3/4 TROUGH SUPPORT ℙ AT UNIT I

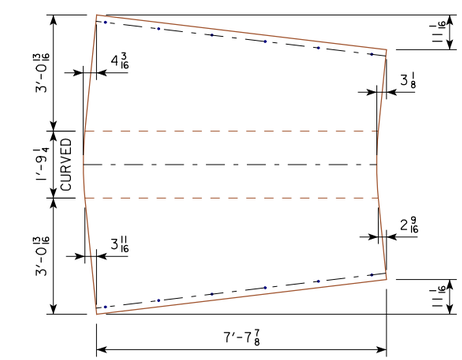

REINFORCED NEOPRENE TROUGH LAYOUT

UNIT I GIRDERS C-D

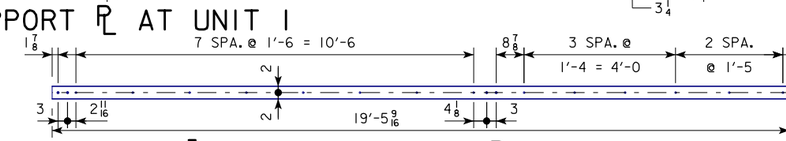

VIEW OF 4x3/4 TROUGH SUPPORT ℙ AT NORTH APPROACH

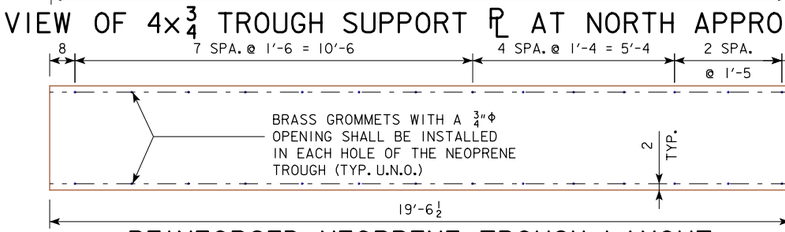

REINFORCED NEOPRENE TROUGH LAYOUT

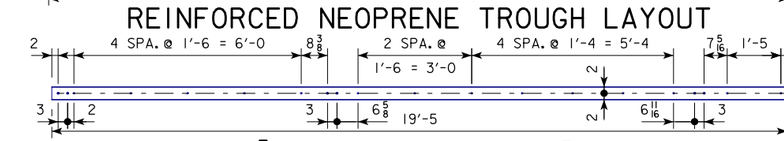

VIEW OF 4x3/4 TROUGH SUPPORT ℙ AT UNIT I

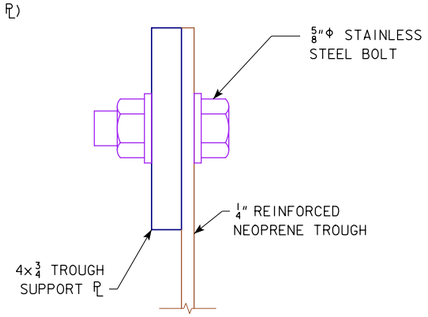

REINFORCED NEOPRENE TROUGH CONNECTION DETAIL

NOTES:

ALL VIEWS LOOKING DOWNSTATION NORMAL TO ℄ JOINT.

SEE DESIGN SHEET 250 FOR REINFORCED NEOPRENE NOTES.

whks
engineers + planners + land surveyors

DESIGN FOR VARIABLE SKEW (L.A.)

2271'-6 x VARI. CONTINUOUS WELDED GIRDER BRIDGE-EBL W/14' BIKE TRAIL

138'-10 & 151'-0 7/8 END SPANS MULTIPLE LENGTH INTERIOR SPANS

JT. DRAINAGE DTLS. - EB JT. 16

STA. 6792+60.93 - 52' LEFT ℄ I-74 OCTOBER, 2015

SCOTT COUNTY

IOWA DEPARTMENT OF TRANSPORTATION - HIGHWAY DIVISION

DESIGN SHEET NO. 236 OF 282 FILE NO. 30253 DESIGN NO. 3408

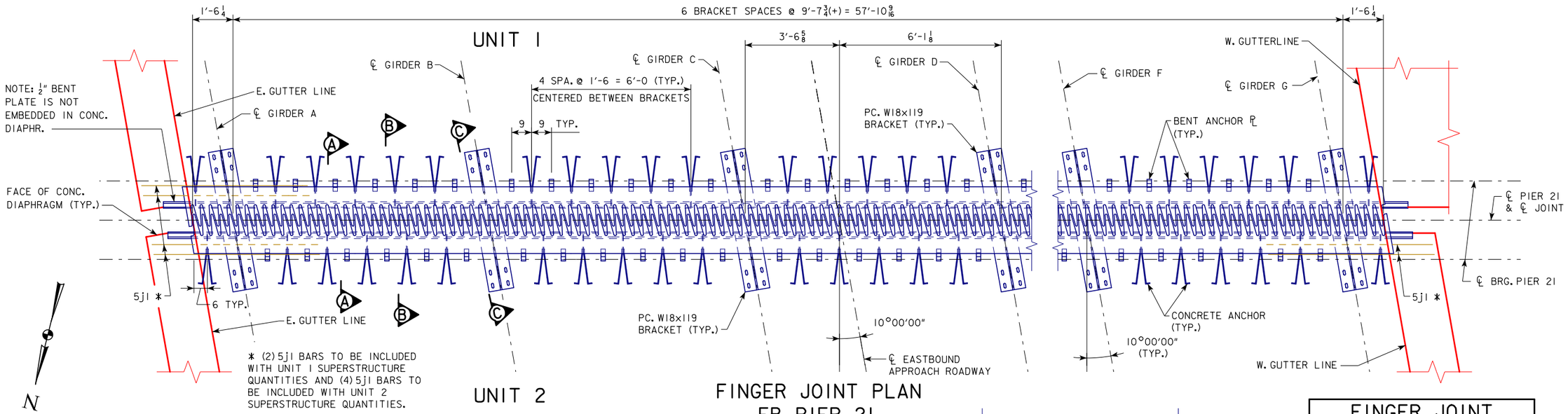

FINGER JOINT PLAN
EB PIER 21

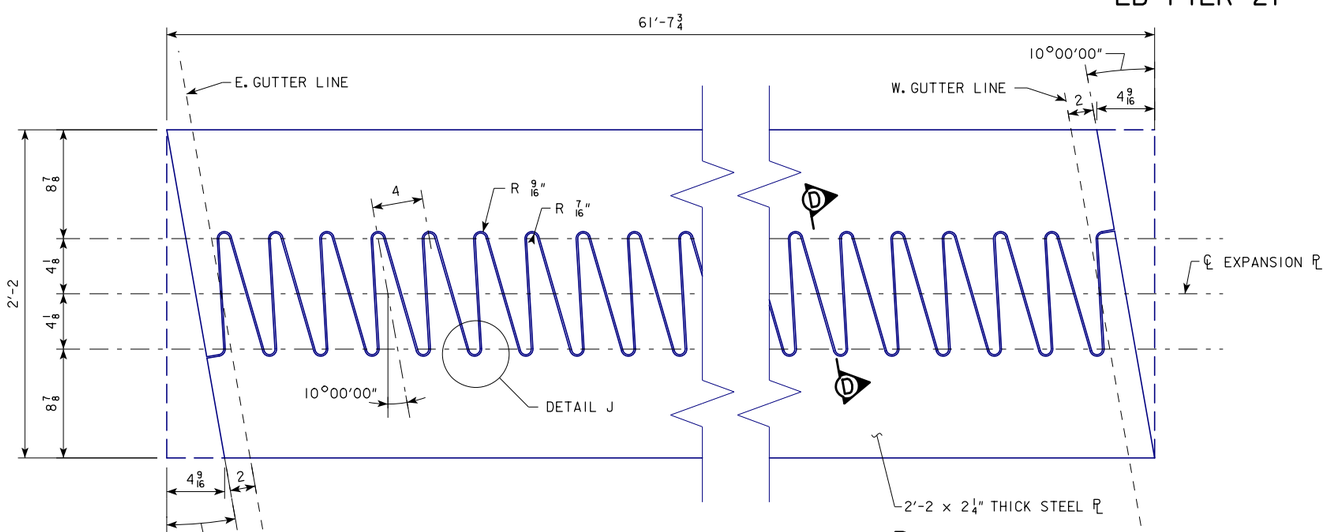

PART PLAN OF EXPANSION PL
SHOWING TOOTH LAYOUT

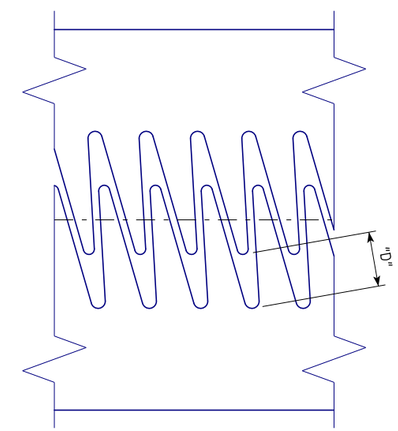

JOINT SETTING DETAIL

FINGER JOINT SETTINGS	
TEMPERATURE	JOINT SETTING "D"
10°	5 3/4
15°	5 9/16
20°	5 3/8
25°	5 3/16
30°	5
35°	4 13/16
40°	4 9/16
45°	4 3/8
50°	4 3/16
55°	4
60°	3 13/16
65°	3 5/8
70°	3 7/16
75°	3 3/16
80°	3
85°	2 13/16
90°	2 5/8

NOTE: TEMPERATURES SHOWN ARE CONCRETE DECK TEMPERATURES ON THE UNDERSIDE OR SHADED PORTION OF THE DECK.

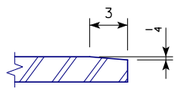

SECTION D-D

NOTE: TOP OF EXPANSION DEVICE IS TO BE PARALLEL TO GRADE. FLAME CUT FROM 2'-2 x 2 1/4" PL. BEVEL EACH TOOTH 1/4" x 3".

NOTE: DIMENSIONS ON THIS PLAN ARE HORIZONTAL ONLY. SEE ACTUAL PLATE SIZES BELOW THAT ARE ALONG CROSS SLOPE.

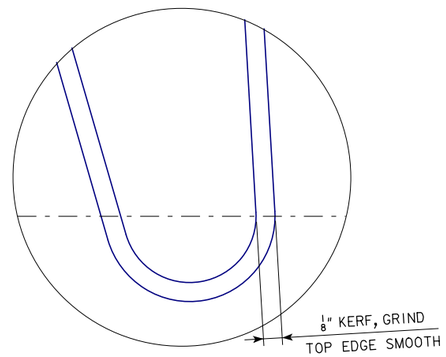

DETAIL J

NOTES:
BARRIER RAIL NOT SHOWN.

SEE DES. SH. 263 FOR FINGER JOINT NOTES.

SEE DES. SH. 238 FOR SECTIONS A-A, B-B AND C-C.

SEE DES. SH. 148 FOR CONCRETE END DIAPHRAGM DETAIL.

DESIGN FOR VARIABLE SKEW (L.A.)

227'-6 x VARI. CONTINUOUS WELDED GIRDER BRIDGE-EBL W/14' BIKE TRAIL

138'-10 & 151'-0 7/8 END SPANS MULTIPLE LENGTH INTERIOR SPANS

FINGER JOINT DTLS. - EB JT. 21

STA. 6792+60.93 - 52' LEFT ℄ I-74 OCTOBER, 2015

SCOTT COUNTY

IOWA DEPARTMENT OF TRANSPORTATION - HIGHWAY DIVISION

DESIGN SHEET NO. 237 OF 282 FILE NO. 30253 DESIGN NO. 3408

whks engineers + planners + land surveyors

DESIGN TEAM CF / BB / MG	SCOTT COUNTY	PROJECT NUMBER BRFIM-074-1(200)5--05-82	SHEET NUMBER 238

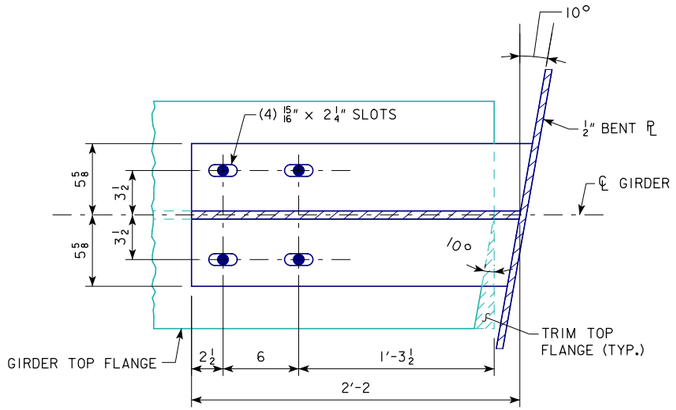

SECTION E-E

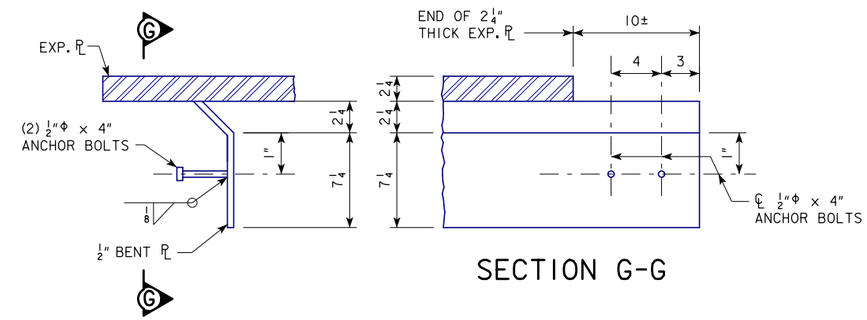

ELEVATION OF 1/2" BENT PL UNDER BARRIER RAIL
(NORMAL TO ℄ JOINT)

SECTION G-G

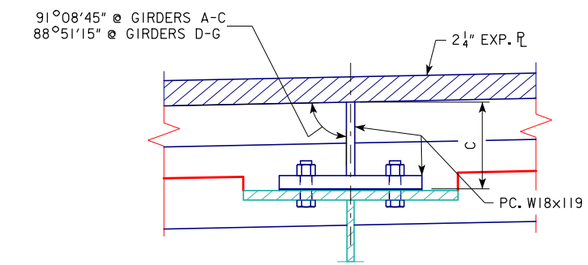

SECTION F-F

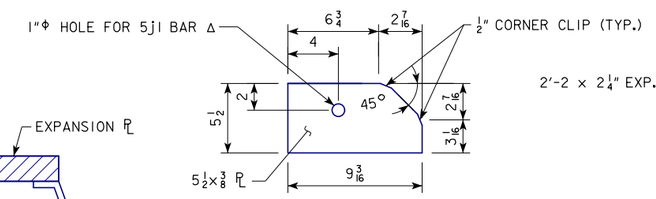

ANCHOR PL DETAIL

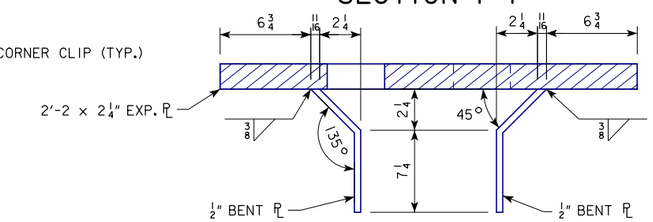

TYPICAL SECTION OF EXPANSION DEVICE NORMAL TO ℄ JOINT

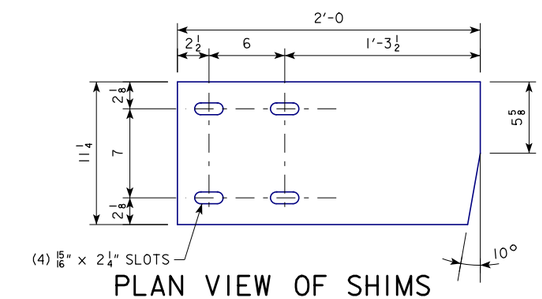

PLAN VIEW OF SHIMS

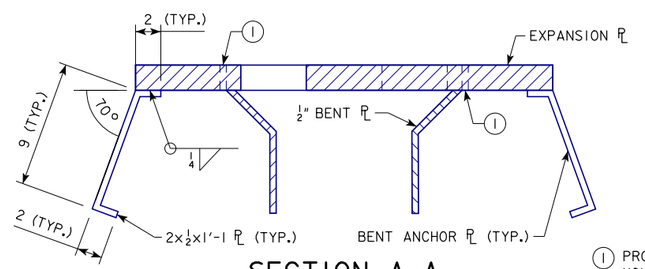

SECTION A-A

(1) PROVIDE 3/4"Φ AIR BLEED VENT HOLES @ 1'-6 CENTERS.

Δ 1"Φ HOLES DRILLED IN EXTERIOR AND FIRST INTERIOR 5 1/2x3/8 ANCHOR PLS EACH SIDE OF JOINT AND PC. WI8x119 BRACKETS AT GIRDERS A & G ONLY.

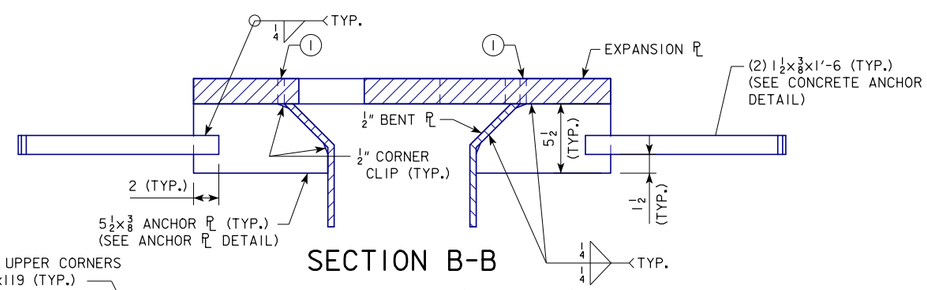

SECTION B-B

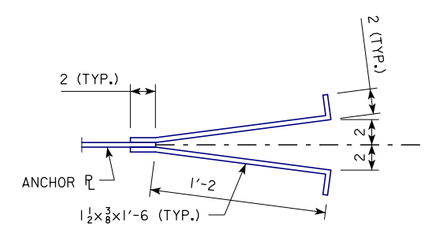

CONCRETE ANCHOR DETAIL

TABLE OF DIMENSIONS

UNIT 1	DIMENSION B	DIMENSION C
GIRDER A	8 7/8	6 1/8
GIRDER B	8 7/8	6 1/8
GIRDER C	8 7/8	6 1/8
GIRDER D	8 7/8	6 1/8
GIRDER E	8 7/8	6 1/8
GIRDER F	8 7/8	6 1/8
GIRDER G	8 7/8	6 1/8
UNIT 2	**DIMENSION B**	**DIMENSION C**
GIRDER A	8 1/2	5 3/4
GIRDER B	8 7/8	6 1/8
GIRDER C	8 7/8	6 1/8
GIRDER D	8 7/8	6 1/8
GIRDER E	8 7/8	6 1/8
GIRDER F	8 7/8	6 1/8
GIRDER G	8 1/2	5 3/4

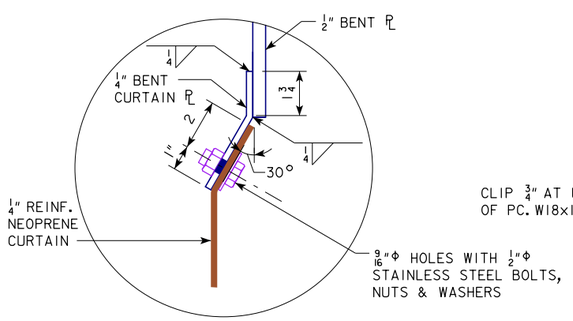

DETAIL H

NOTES:

SEE DESIGN SHEETS 242-245 FOR NEOPRENE CURTAIN AND TROUGH DETAILS.

CONTRACTOR SHALL PROVIDE SHIM PACK CONSISTING OF 1/8" AND 1/4" SHIMS TOTALING 1" THICKNESS FOR EACH GIRDER. ALL SHIMS MAY NOT BE USED.

FINGER JOINT EXPANSION PLATE IS TO BE RECESSED 1/4" BELOW TOP OF SLAB.

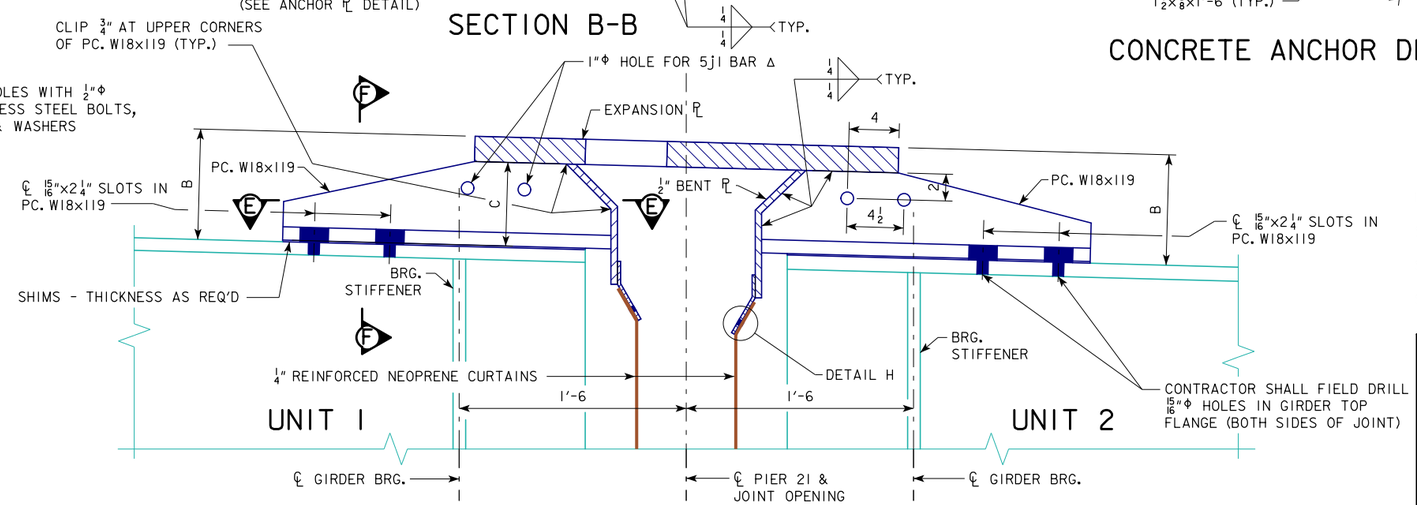

SECTION C-C (ALONG ℄ GIRDER)

NOTES:

SEE DES. SH. 263 FOR FINGER JOINT NOTES.

SEE DES. SH. 237 FOR LOCATION OF SECTIONS A-A, B-B AND C-C.

SEE DES. SH. 148 FOR CONCRETE END DIAPHRAGM DETAIL.

whks
engineers + planners + land surveyors

DESIGN FOR VARIABLE SKEW (L.A.)

227'-6 x VARI. CONTINUOUS WELDED GIRDER BRIDGE-EBL W/14' BIKE TRAIL

138'-10 & 151'-0 7/8 END SPANS MULTIPLE LENGTH INTERIOR SPANS

FINGER JOINT DTLS. - EB JT. 21

STA. 6792+60.93 - 52' LEFT ℄ I-74 OCTOBER, 2015

SCOTT COUNTY

IOWA DEPARTMENT OF TRANSPORTATION - HIGHWAY DIVISION

DESIGN SHEET NO. 238 OF 282 FILE NO. 30253 DESIGN NO. 3408

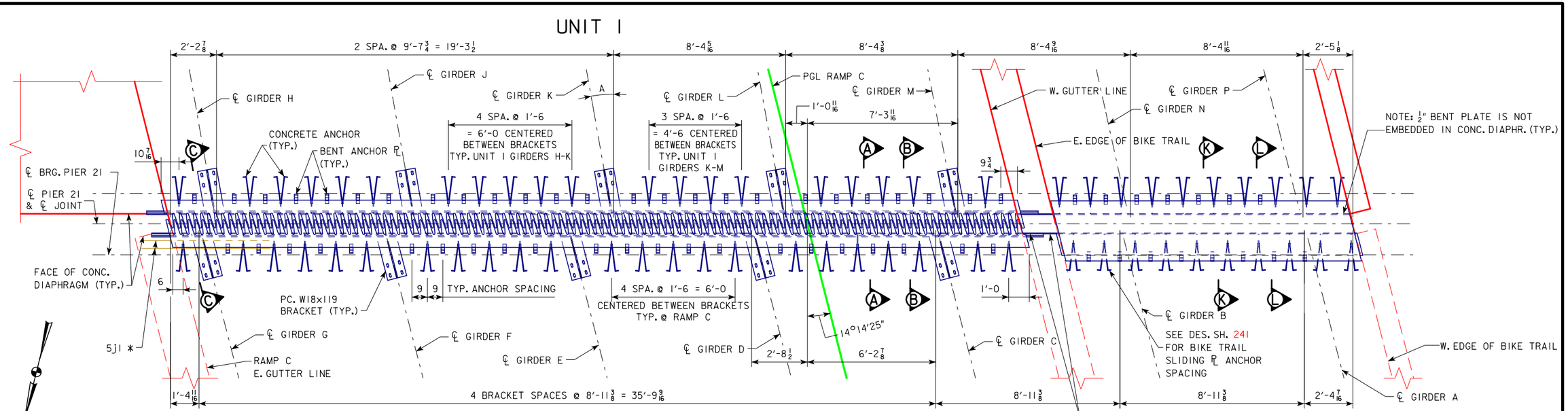

FINGER JOINT PLAN
EB PIER 21C

RAMP C

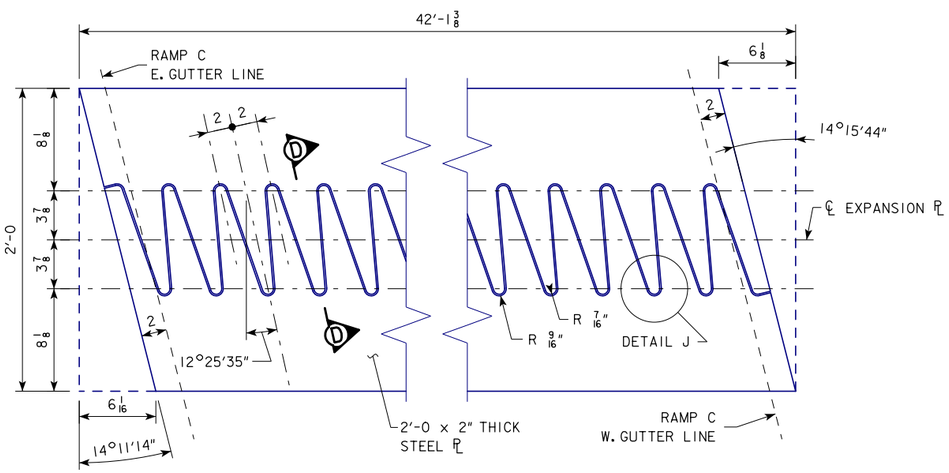

PART PLAN OF EXPANSION ℙ
SHOWING TOOTH LAYOUT

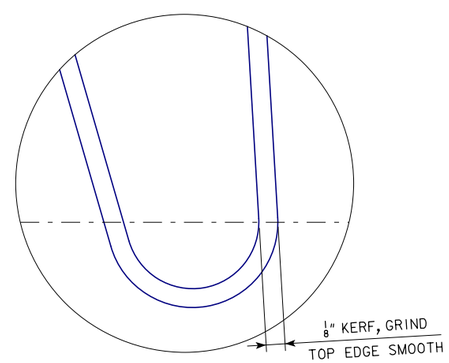

DETAIL J

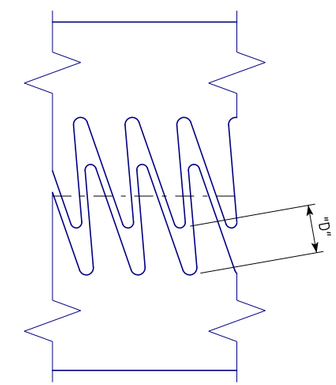

JOINT SETTING DETAIL

FINGER JOINT SETTINGS

TEMPERATURE	JOINT SETTING "D"
10°	5 3/8
15°	5 3/16
20°	5
25°	4 13/16
30°	4 5/8
35°	4 1/2
40°	4 5/16
45°	4 1/8
50°	3 15/16
55°	3 3/4
60°	3 9/16
65°	3 3/8
70°	3 1/4
75°	3 1/16
80°	2 7/8
85°	2 11/16
90°	2 1/2

NOTE: TEMPERATURES SHOWN ARE CONCRETE DECK TEMPERATURES ON THE UNDERSIDE OR SHADED PORTION OF THE DECK.

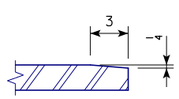

SECTION D-D

NOTE: TOP OF EXPANSION DEVICE IS TO BE PARALLEL TO GRADE. FLAME CUT FROM 2'-0 x 2" ℙ. BEVEL EACH TOOTH 1/4" x 3".

NOTE: DIMENSIONS ON THIS PLAN ARE HORIZONTAL ONLY. SEE ACTUAL PLATE SIZES BELOW THAT ARE ALONG CROSS SLOPE.

NOTES:
BARRIER RAIL NOT SHOWN.

SEE DES. SH. 263 FOR FINGER JOINT NOTES.

SEE DES. SH. 240 FOR SECTIONS A-A, B-B, C-C, AND VALUE OF ANGLE A.

SEE DES. SH. 148 FOR CONCRETE END DIAPHRAGM DETAIL.

SEE DES. SH. 241 FOR SECTIONS K-K AND L-L.

whks
engineers + planners + land surveyors

DESIGN FOR VARIABLE SKEW (L.A.)

227'-6 x VARI. CONTINUOUS WELDED GIRDER BRIDGE-EBL W/14' BIKE TRAIL

138'-10 & 151'-0 7/8 END SPANS MULTIPLE LENGTH INTERIOR SPANS

FINGER JOINT DTLS. - EB JT. 21C

STA. 6792+60.93 - 52' LEFT ℄ I-74 OCTOBER, 2015

SCOTT COUNTY

IOWA DEPARTMENT OF TRANSPORTATION - HIGHWAY DIVISION

DESIGN SHEET NO. 239 OF 282 FILE NO. 30253 DESIGN NO. 3408

NOTE: ALL PC. W18x119 MAY BE FABRICATED ASSUMING A 90° ANGLE. DUE TO CURVATURE OF THE GIRDERS, THE WEB OF EACH GIRDER WILL NOT BE ALIGNED WITH THE WEB OF EACH PC. W18x119. ADJUST THE HOLES IN THE TOP FLANGE OF THE GIRDERS AS NECESSARY. CONTRACTOR SHALL FIELD DRILL HOLES IN GIRDER TOP FLANGES FOR CONNECTING BRACKETS.

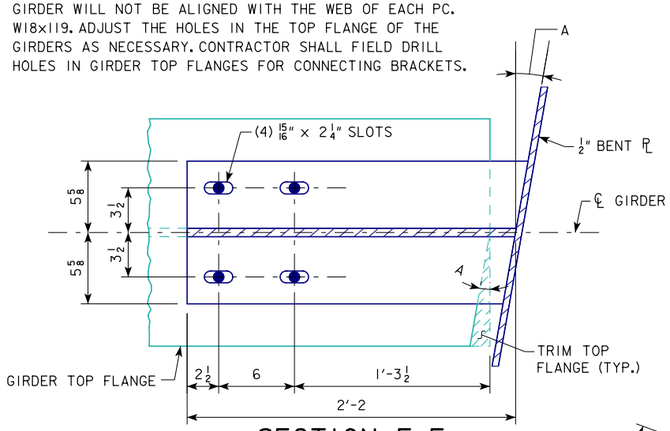

SECTION E-E

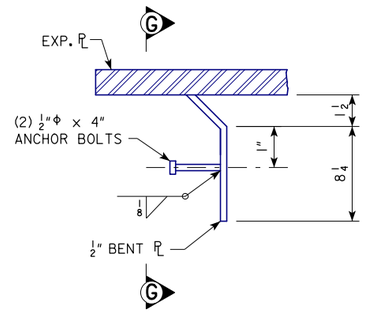

ELEVATION OF 1/2" BENT PL UNDER BARRIER RAIL
(NORMAL TO ℄ JOINT)

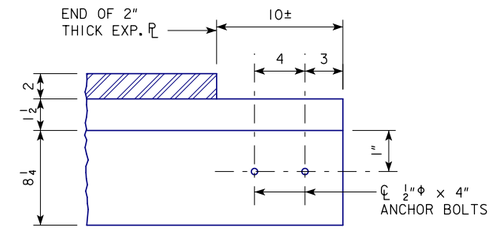

SECTION G-G

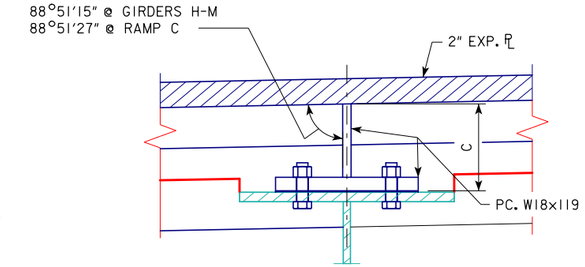

SECTION F-F

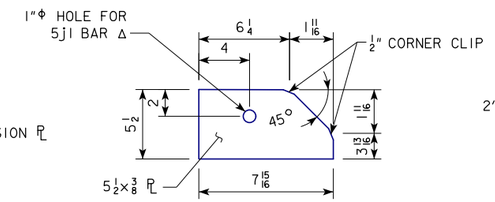

ANCHOR PL DETAIL

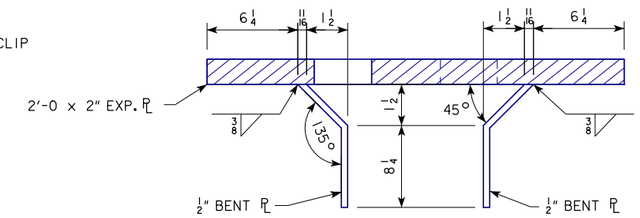

TYPICAL SECTION OF EXPANSION DEVICE NORMAL TO ℄ JOINT

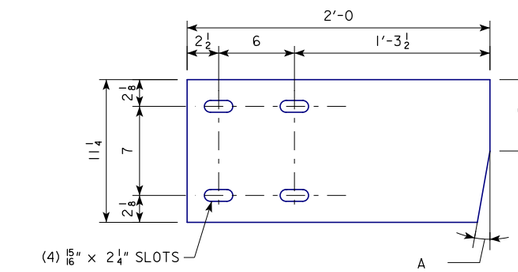

PLAN VIEW OF SHIMS

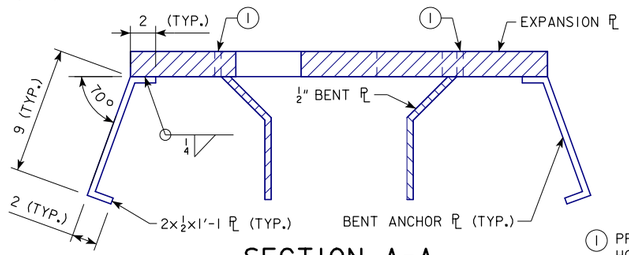

SECTION A-A

(1) PROVIDE 3/4"Φ AIR BLEED VENT HOLES @ 1'-6 CENTERS.

Δ 1"Φ HOLES DRILLED IN EXTERIOR AND FIRST INTERIOR 5 1/2x3/8 ANCHOR PLS EACH SIDE OF JOINT AND PC. W18x119 BRACKETS AT RAMP C GIRDER G ONLY.

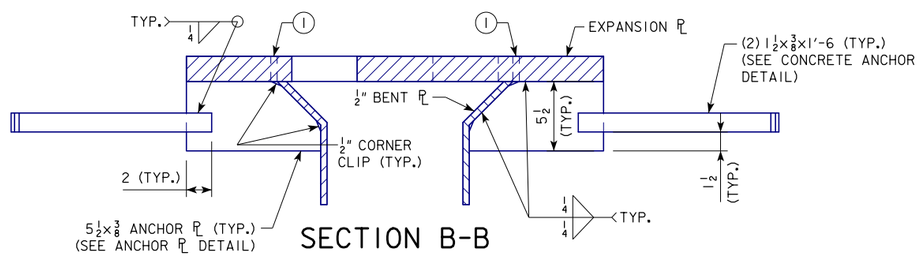

SECTION B-B

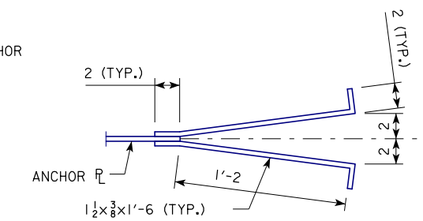

CONCRETE ANCHOR DETAIL

TABLE OF DIMENSIONS

UNIT 1	DIMENSION A	DIMENSION B	DIMENSION C
GIRDER H	10°00'00"	8 7/8	6 3/8
GIRDER J	10°00'00"	8 7/8	6 3/8
GIRDER K	10°00'00"	8 7/8	6 3/8
GIRDER L	10°20'42"	9	6 1/2
GIRDER M	11°00'51"	9	6 1/2
RAMP C	**DIMENSION A**	**DIMENSION B**	**DIMENSION C**
GIRDER C	14°26'40" TYPICAL RAMP C	8 3/4	6 1/4
GIRDER D		8 3/4	6 1/4
GIRDER E		8 3/4	6 1/4
GIRDER F		8 3/4	6 1/4
GIRDER G		8 3/4	6 1/4

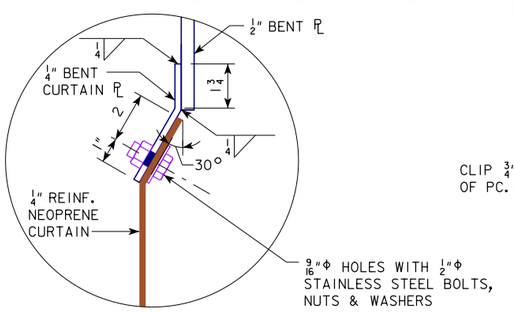

DETAIL H

NOTES:

SEE DESIGN SHEETS 242 - 245 FOR NEOPRENE CURTAIN AND TROUGH DETAILS.

CONTRACTOR SHALL PROVIDE SHIM PACK CONSISTING OF 1/8" AND 1/4" SHIMS TOTALING 1" THICKNESS FOR EACH GIRDER. ALL SHIMS MAY NOT BE USED.

FINGER JOINT EXPANSION PLATE IS TO BE RECESSED 1/4" BELOW TOP OF SLAB.

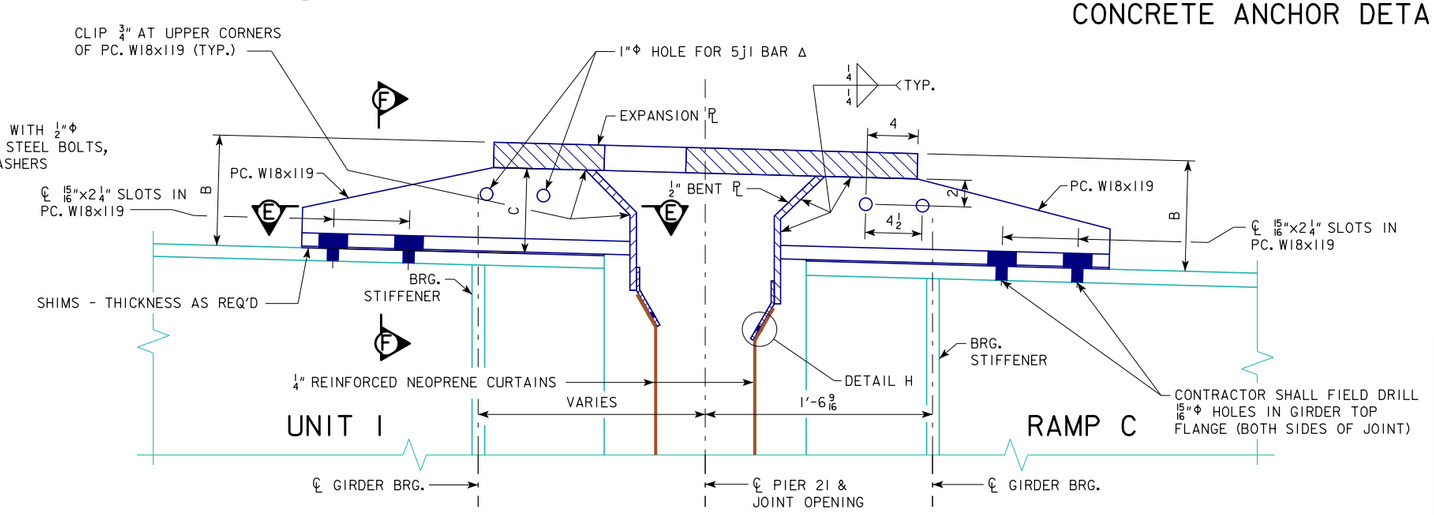

SECTION C-C (ALONG ℄ GIRDER)

NOTES:
SEE DES. SH. 263 FOR FINGER JOINT NOTES.

SEE DES. SH. 239 FOR LOCATION OF SECTIONS A-A, B-B AND C-C.

SEE DES. SH. 148 FOR CONCRETE END DIAPHRAGM DETAIL.

whks
engineers + planners + land surveyors

DESIGN FOR VARIABLE SKEW (L.A.)

227'-6 x VARI. CONTINUOUS WELDED GIRDER BRIDGE-EBL W/14' BIKE TRAIL

138'-10 & 151'-0 7/8 END SPANS MULTIPLE LENGTH INTERIOR SPANS

FINGER JOINT DTLS. - EB JT. 21C

STA. 6792+60.93 - 52' LEFT ℄ I-74 OCTOBER, 2015

SCOTT COUNTY

IOWA DEPARTMENT OF TRANSPORTATION - HIGHWAY DIVISION

DESIGN SHEET NO. 240 OF 282 FILE NO. 30253 DESIGN NO. 3408

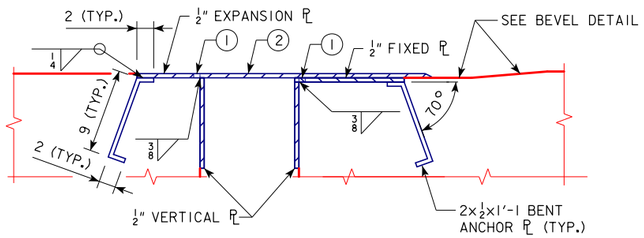

SECTION L-L

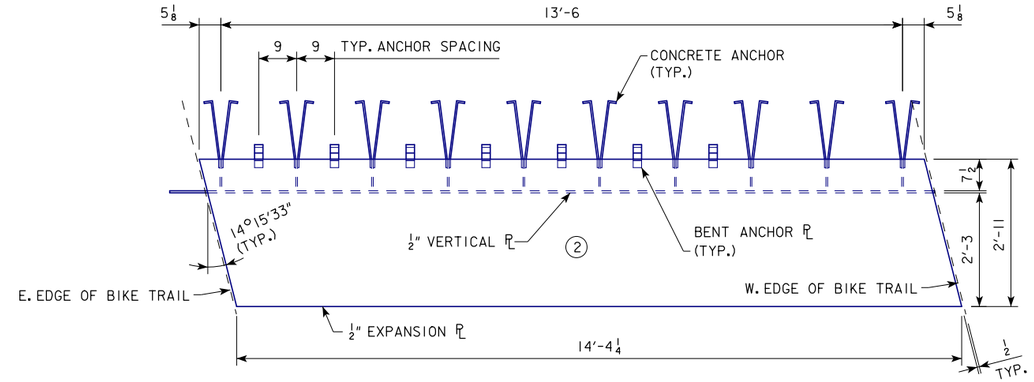

BIKE TRAIL EXPANSION PL

1. PROVIDE 3/4"Φ AIR BLEED VENT HOLES @ 1'-6 CENTERS.
2. NON-SKID TEXTURE ON EXPANSION PLATE SHALL MEET THE REQUIREMENTS OF ASTM A786 WITH RAISED FIGURES. FIGURES SHALL BE ANGULAR. ROUNDED FIGURES WILL NOT BE ACCEPTED.

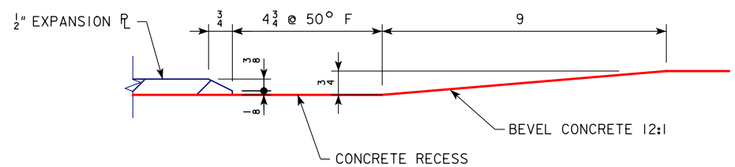

BEVEL DETAIL

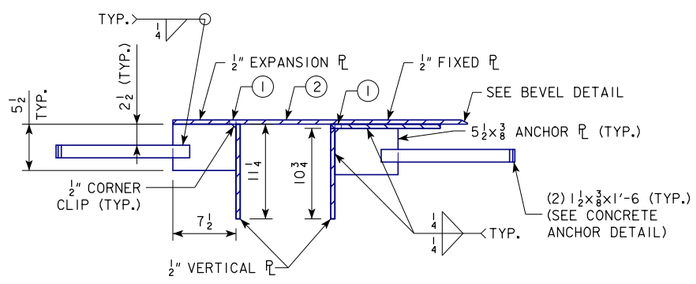

SECTION K-K

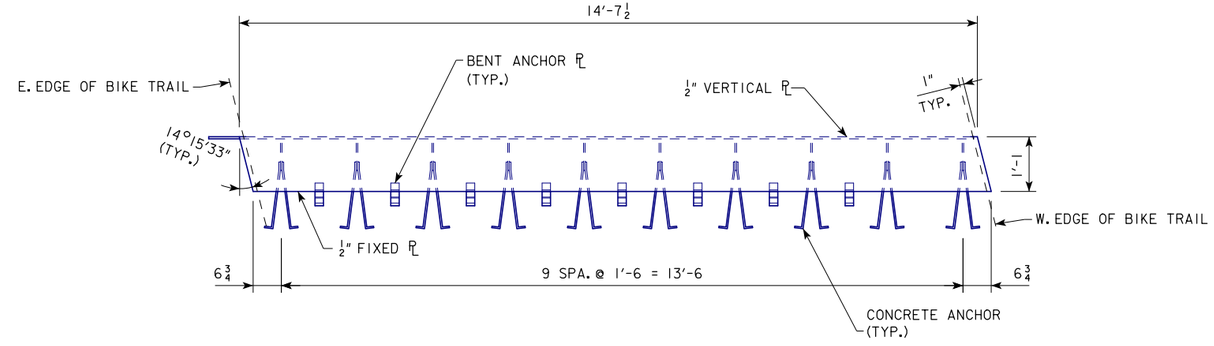

BIKE TRAIL FIXED PL

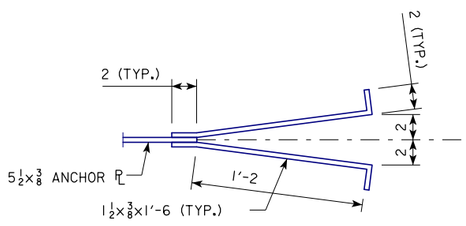

CONCRETE ANCHOR DETAIL

NOTES:

SEE DES. SH. 263 FOR FINGER JOINT NOTES.

SEE DES. SH. 239 FOR LOCATION OF SECTIONS K-K AND L-L.

SEE DES. SH. 148 FOR CONCRETE END DIAPHRAGM DETAIL.

SIDEWALK EXPANSION PL SHALL BE RECESSED 1/4" BELOW SLAB.

whks
engineers + planners + land surveyors

DESIGN FOR VARIABLE SKEW (L.A.)

2271'-6 x VARI. CONTINUOUS WELDED GIRDER BRIDGE-EBL W/14' BIKE TRAIL

138'-10 & 151'-0 7/8 END SPANS MULTIPLE LENGTH INTERIOR SPANS

FINGER JOINT DTLS. - EB JT. 21C

STA. 6792+60.93 - 52' LEFT ℄ I-74 OCTOBER, 2015

SCOTT COUNTY

IOWA DEPARTMENT OF TRANSPORTATION - HIGHWAY DIVISION

DESIGN SHEET NO. 241 OF 282 FILE NO. 30253 DESIGN NO. 3408

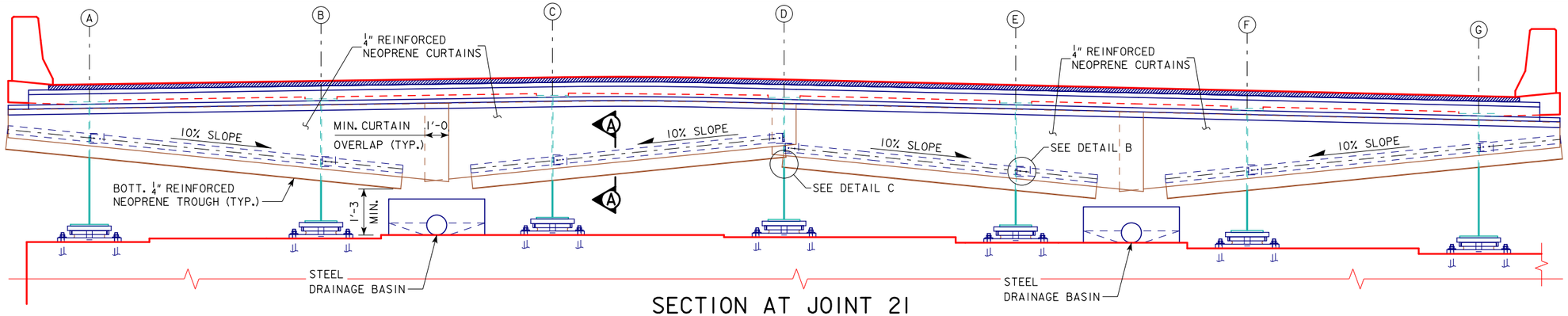

SECTION AT JOINT 21

(UNIT 2 SHOWN, LOOKING DOWNSTATION NORMAL TO ℄ PIER)

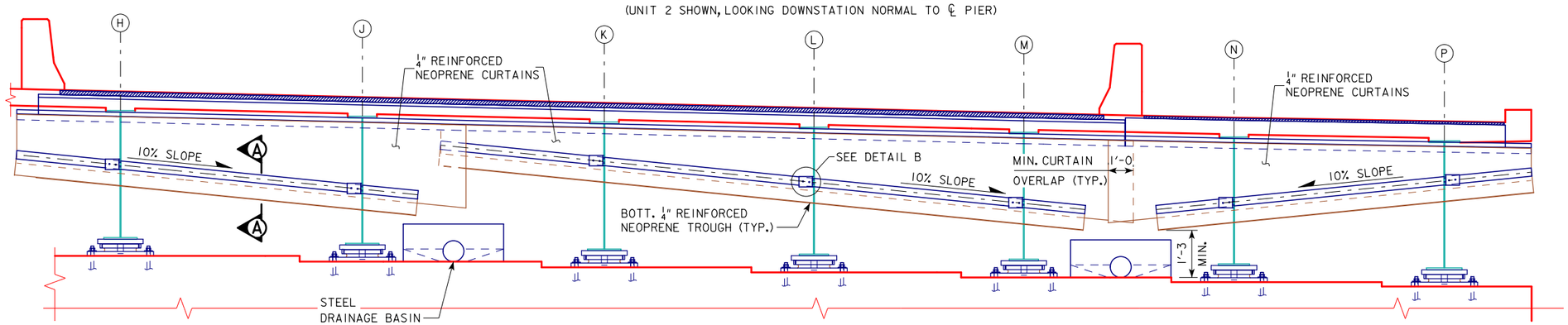

SECTION AT JOINT 21C

(UNIT 1 SHOWN, LOOKING DOWNSTATION NORMAL TO ℄ PIER)

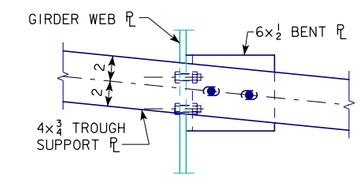

DETAIL B

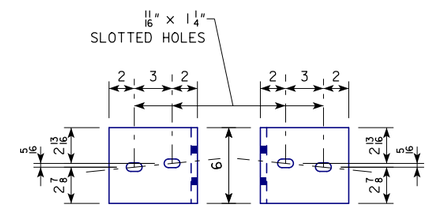

DETAIL OF 6x1/2 BENT PLS

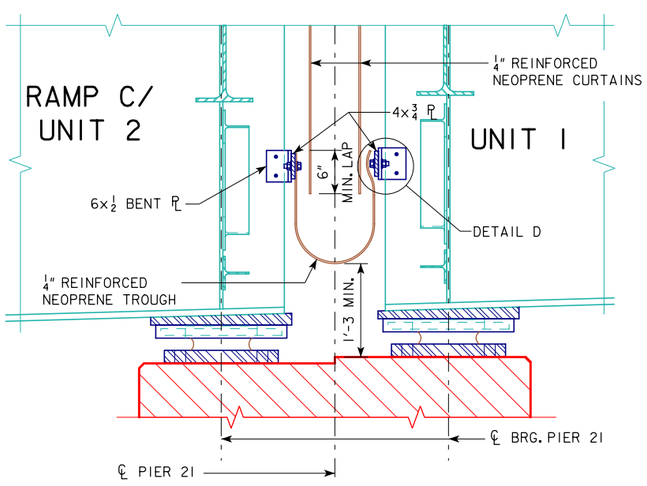

SECTION A-A

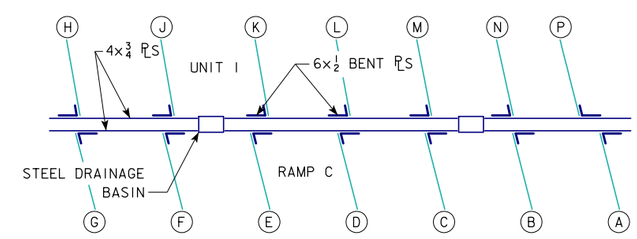

JOINT 21C TROUGH HANGER BRACKET LAYOUT

SHOWING ORIENTATION OF 6x1/2 BENT PLS

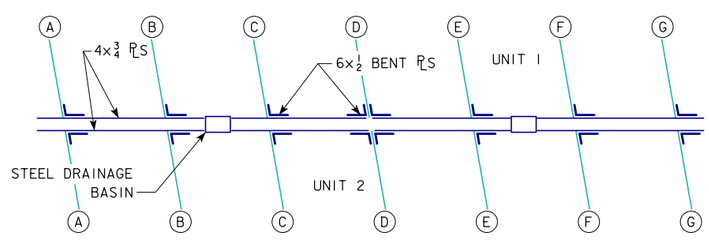

JOINT 21 TROUGH HANGER BRACKET LAYOUT

SHOWING ORIENTATION OF 6x1/2 BENT PLS

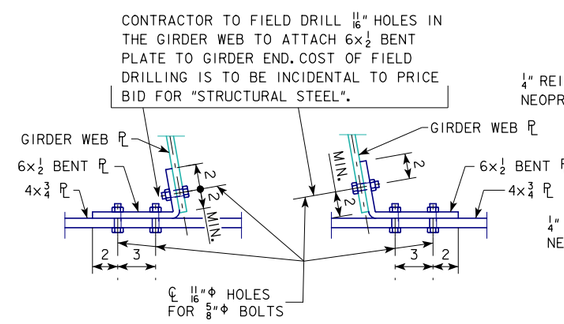

PLAN OF TROUGH PL CONNECTION TYPES

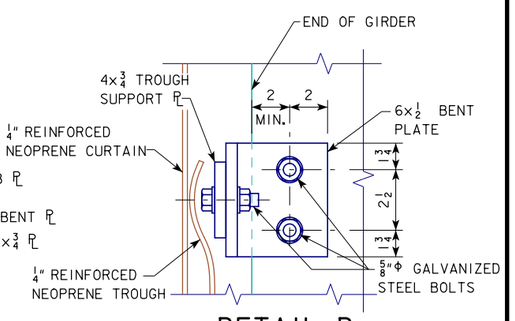

DETAIL D

NOTE:
NEOPRENE TROUGH IS ATTACHED TO THE 4x3/4 TROUGH PL ONLY AND DOES NOT BOLT TO THE 6x1/2 BENT PL.

N

NOTES:
SEE DESIGN SHEET 275 FOR DETAILS OF STEEL DRAINAGE BASIN.

SEE DESIGN SHEET 243 FOR DETAIL C.

STEEL TRAFFIC RAILING AND PEDESTRIAN FENCE NOT SHOWN.

whks
engineers + planners + land surveyors

DESIGN FOR VARIABLE SKEW (L.A.)

2271'-6 x VARI. CONTINUOUS WELDED GIRDER BRIDGE-EBL W/14' BIKE TRAIL

138'-10 & 151'-0 7/8 END SPANS MULTIPLE LENGTH INTERIOR SPANS

JT. DRAINAGE DTLS. - EB JT. 21&21C

STA. 6792+60.93 - 52' LEFT ℄ I-74 OCTOBER, 2015

SCOTT COUNTY

IOWA DEPARTMENT OF TRANSPORTATION - HIGHWAY DIVISION

DESIGN SHEET NO. 242 OF 282 FILE NO. 30253 DESIGN NO. 3408

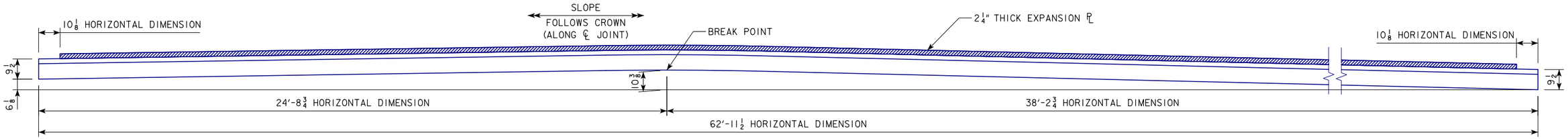

VIEW OF FINGER JOINT PLATE ASSEMBLY

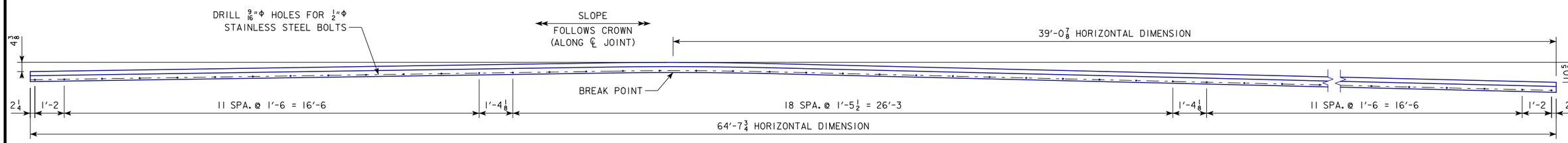

VIEW OF 5x1/4 BENT PL

(SEE DETAIL H ON DES. SH. 238 FOR DETAIL)

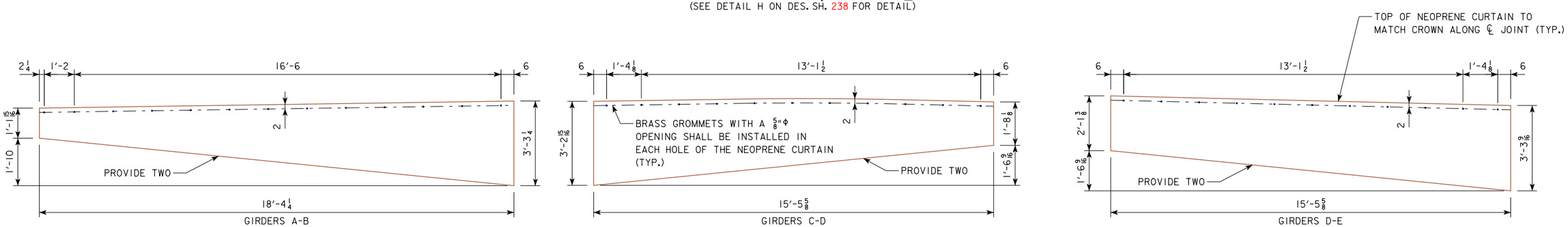

ELEVATION VIEW - REINFORCED NEOPRENE CURTAIN

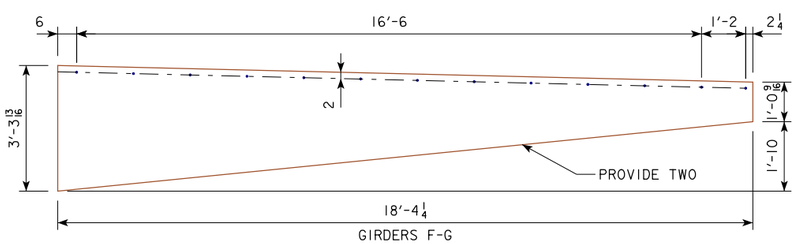

ELEVATION VIEW - REINFORCED NEOPRENE CURTAIN

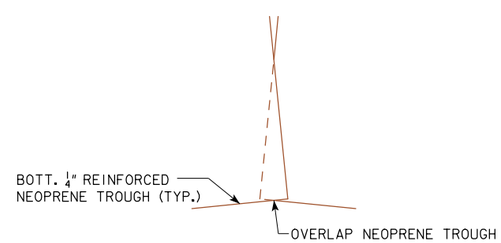

DETAIL C

NOTES:

THE CONTRACTOR HAS THE OPTION OF CUTTING THE EXPANSION PL AT THE BREAK POINT TO ACCOUNT FOR THE CROSS SLOPE TRANSITION. A 1/2" GROOVE WELD SHALL BE USED ALL AROUND THE EXPANSION PL AND A 1/4" GROOVE WELD SHALL BE USED ALL AROUND THE 1/2" BENT PL TO CONNECT THE PLS TOGETHER. ALL SURFACES NOT IN CONTACT WITH CONCRETE ARE TO BE GROUND FLUSH.

ALL VIEWS LOOKING DOWNSTATION NORMAL TO ℄ JOINT.

SEE DESIGN SHEET 250 FOR REINFORCED NEOPRENE NOTES.

SEE DESIGN SHEET 242 FOR LOCATION OF DETAIL C.

whks
engineers + planners + land surveyors

DESIGN FOR VARIABLE SKEW (L.A.)

2271'-6 x VARI. CONTINUOUS WELDED GIRDER BRIDGE-EBL W/14' BIKE TRAIL

138'-10 & 151'-0 7/8 END SPANS MULTIPLE LENGTH INTERIOR SPANS

JT. DRAINAGE DTLS. - EB JT. 21

STA. 6792+60.93 - 52' LEFT ℄ I-74 OCTOBER, 2015

SCOTT COUNTY

IOWA DEPARTMENT OF TRANSPORTATION - HIGHWAY DIVISION

DESIGN SHEET NO. 243 OF 282 FILE NO. 30253 DESIGN NO. 3408

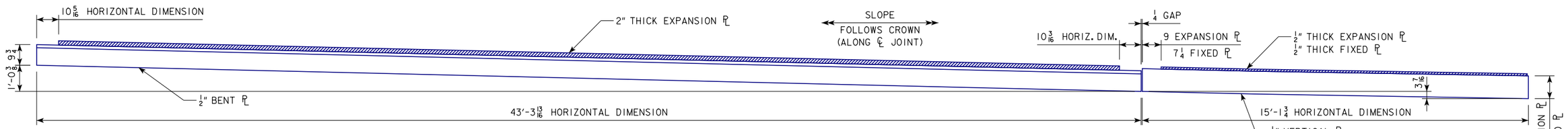

VIEW OF FINGER JOINT PLATE AND SIDEWALK SLIDING PLATE ASSEMBLY @ JOINT 21C

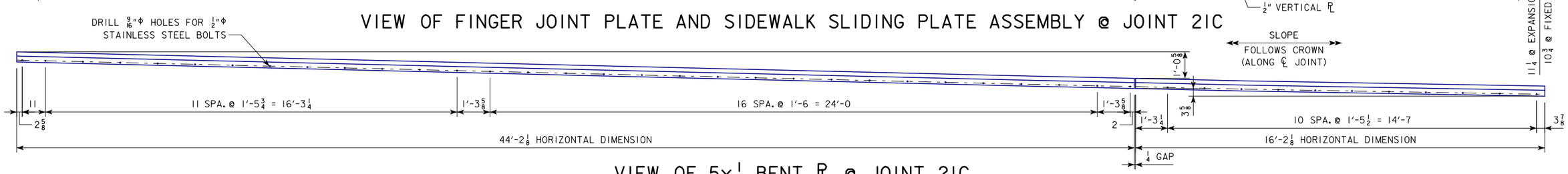

VIEW OF 5x1/4 BENT PL @ JOINT 21C

(SEE DETAIL H ON DES. SH. 240 FOR DETAIL)

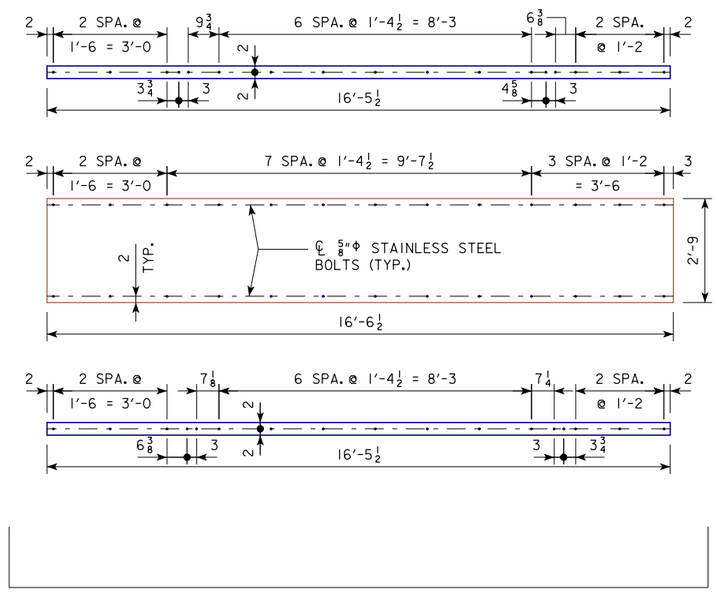

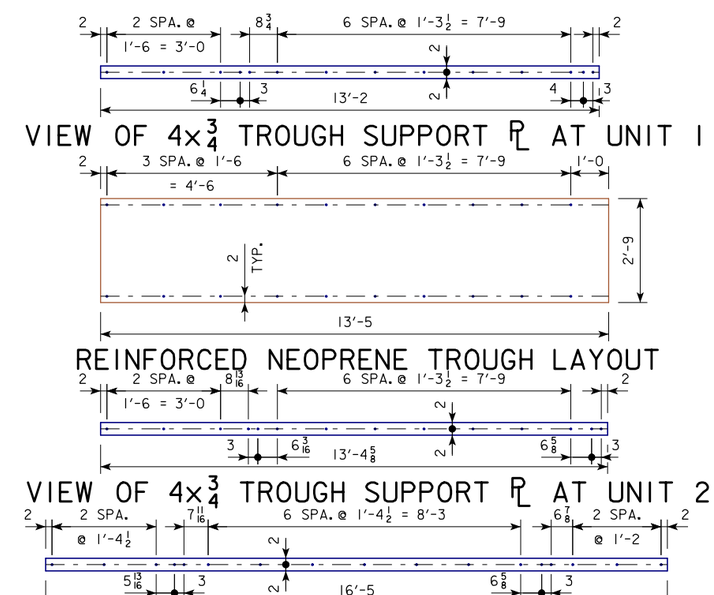

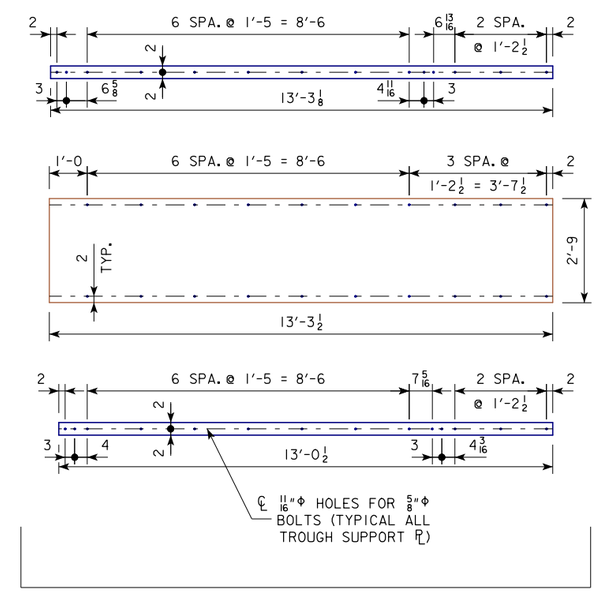

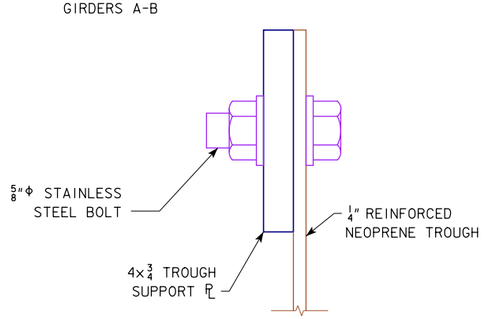

REINFORCED NEOPRENE TROUGH CONNECTION DETAIL

NOTES:

ALL VIEWS LOOKING DOWNSTATION NORMAL TO ℄ JOINT.

SEE DESIGN SHEET 250 FOR REINFORCED NEOPRENE NOTES.

whks
engineers + planners + land surveyors

DESIGN FOR VARIABLE SKEW (L.A.)

2271'-6 x VARI. CONTINUOUS WELDED GIRDER BRIDGE-EBL W/14' BIKE TRAIL

138'-10 & 151'-0 7/8 END SPANS MULTIPLE LENGTH INTERIOR SPANS

JT. DRAINAGE DTLS. - EB JT.21&21C

STA. 6792+60.93 - 52' LEFT ℄ I-74 OCTOBER, 2015

SCOTT COUNTY

IOWA DEPARTMENT OF TRANSPORTATION - HIGHWAY DIVISION

DESIGN SHEET NO. 244 OF 282 FILE NO. 30253 DESIGN NO. 3408

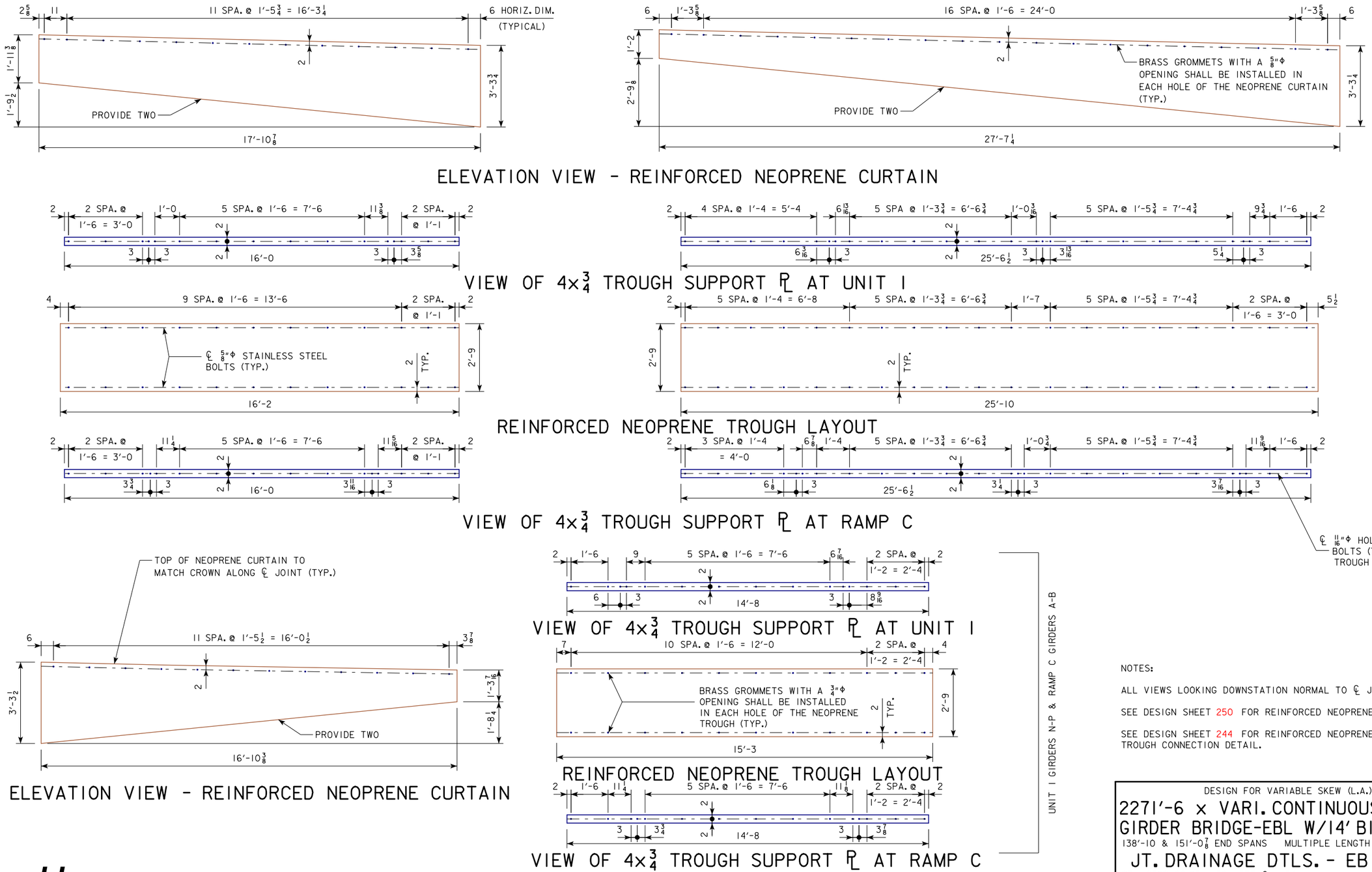

NOTES:

ALL VIEWS LOOKING DOWNSTATION NORMAL TO ℄ JOINT.

SEE DESIGN SHEET 250 FOR REINFORCED NEOPRENE NOTES.

SEE DESIGN SHEET 244 FOR REINFORCED NEOPRENE TROUGH CONNECTION DETAIL.

whks
engineers + planners + land surveyors

DESIGN FOR VARIABLE SKEW (L.A.)

2271'-6 x VARI. CONTINUOUS WELDED GIRDER BRIDGE-EBL W/14' BIKE TRAIL

138'-10 & 151'-0 7/8 END SPANS MULTIPLE LENGTH INTERIOR SPANS

JT. DRAINAGE DTLS. - EB JT. 21C

STA. 6792+60.93 - 52' LEFT ℄ I-74 OCTOBER, 2015

SCOTT COUNTY

IOWA DEPARTMENT OF TRANSPORTATION - HIGHWAY DIVISION

DESIGN SHEET NO. 245 OF 282 FILE NO. 30253 DESIGN NO. 3408

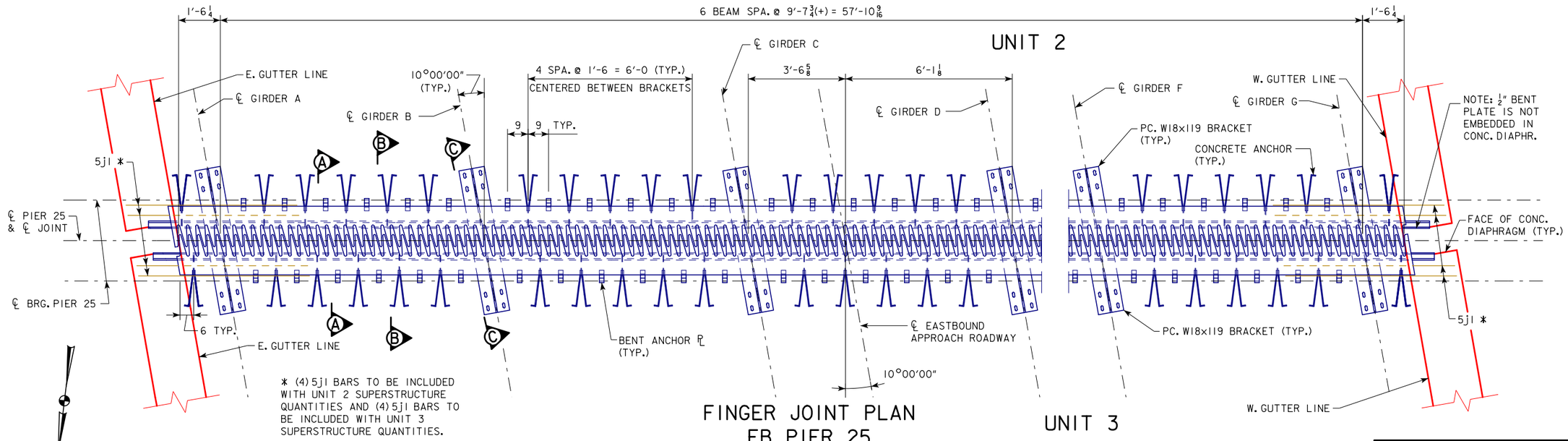

FINGER JOINT PLAN
EB PIER 25

UNIT 3

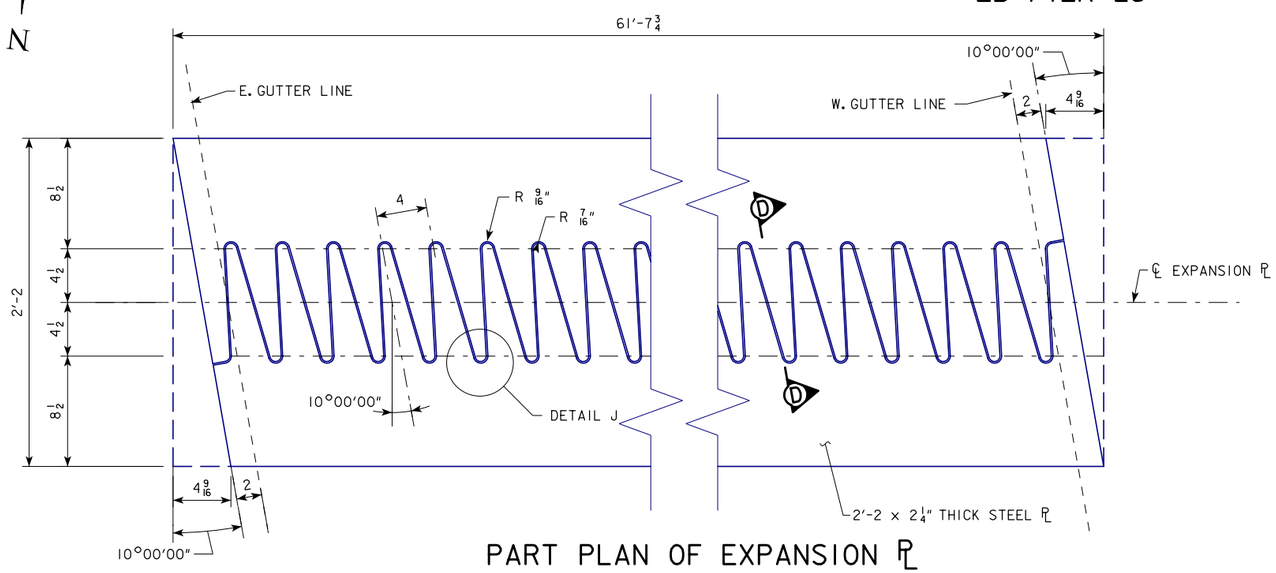

PART PLAN OF EXPANSION PL
SHOWING TOOTH LAYOUT

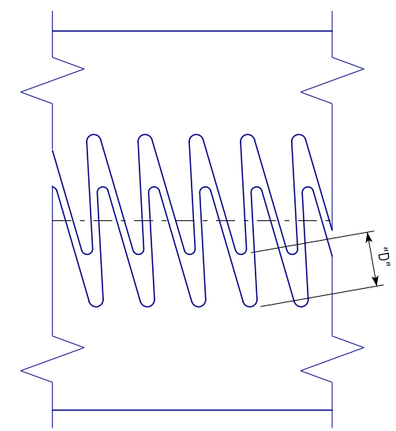

JOINT SETTING DETAIL

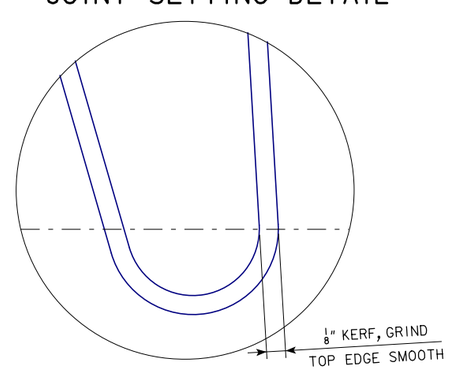

DETAIL J

FINGER JOINT SETTINGS

TEMPERATURE	JOINT SETTING "D"
10°	6⅜
15°	6⅛
20°	5 15/16
25°	5 11/16
30°	5½
35°	5¼
40°	5 1/16
45°	4 13/16
50°	4⅝
55°	4⅜
60°	4 3/16
65°	3 15/16
70°	3¾
75°	3½
80°	3¼
85°	3 1/16
90°	2 13/16

NOTE: TEMPERATURES SHOWN ARE CONCRETE DECK TEMPERATURES ON THE UNDERSIDE OR SHADED PORTION OF THE DECK.

NOTES:
BARRIER RAIL NOT SHOWN.

SEE DES. SH. 263 FOR FINGER JOINT NOTES.

SEE DES. SH. 247 FOR SECTIONS A-A, B-B AND C-C.

SEE DES. SH. 148 FOR CONCRETE END DIAPHRAGM DETAIL.

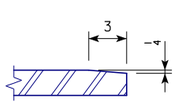

SECTION D-D

NOTE: TOP OF EXPANSION DEVICE IS TO BE PARALLEL TO GRADE. FLAME CUT FROM 2'-2 x 2¼" PL. BEVEL EACH TOOTH ¼" x 3".

NOTE: DIMENSIONS ON THIS PLAN ARE HORIZONTAL ONLY. SEE ACTUAL PLATE SIZES BELOW THAT ARE ALONG CROSS SLOPE.

whks
engineers + planners + land surveyors

DESIGN FOR VARIABLE SKEW (L.A.)

2271'-6 x VARI. CONTINUOUS WELDED GIRDER BRIDGE-EBL W/14' BIKE TRAIL

138'-10 & 151'-0⅞ END SPANS MULTIPLE LENGTH INTERIOR SPANS

FINGER JOINT DTLS. - EB JT. 25

STA. 6792+60.93 - 52' LEFT ℄ I-74 OCTOBER, 2015

SCOTT COUNTY

IOWA DEPARTMENT OF TRANSPORTATION - HIGHWAY DIVISION

DESIGN SHEET NO. 246 OF 282 FILE NO. 30253 DESIGN NO. 3408

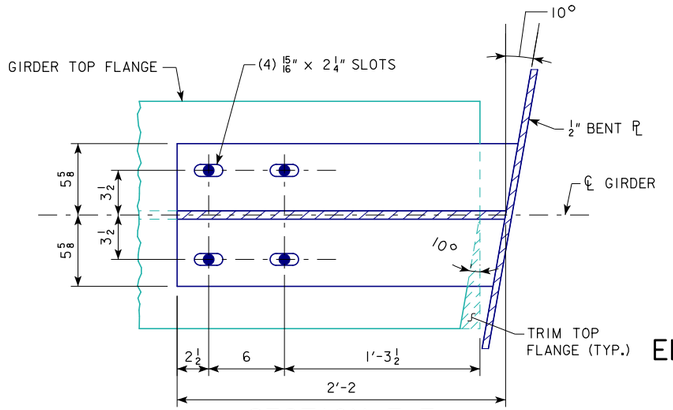

SECTION E-E

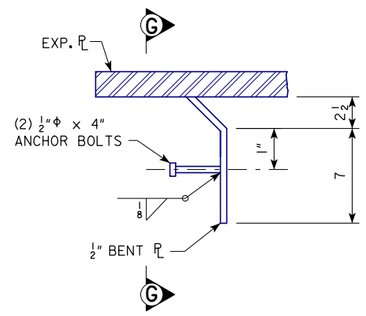

ELEVATION OF 1/2" BENT PL UNDER BARRIER RAIL
(NORMAL TO ℄ JOINT)

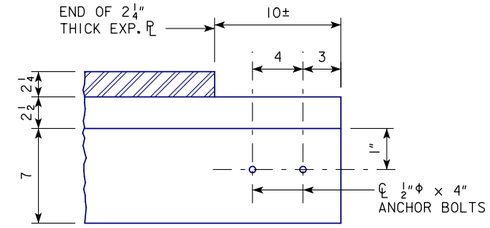

SECTION G-G

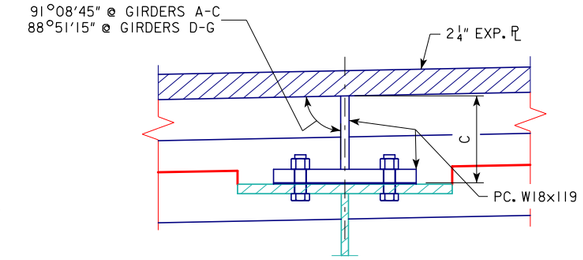

SECTION F-F

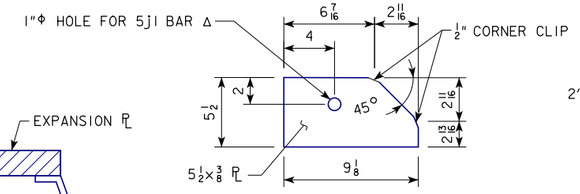

ANCHOR PL DETAIL

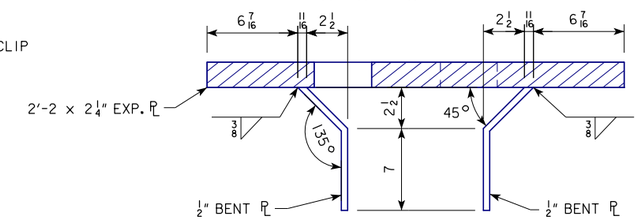

TYPICAL SECTION OF EXPANSION DEVICE NORMAL TO ℄ JOINT

Δ 1"Φ HOLES DRILLED IN EXTERIOR AND FIRST INTERIOR 5 1/2x3/8 ANCHOR PLS EACH SIDE OF JOINT AND PC. W18x119 BRACKETS AT GIRDERS A & G ONLY.

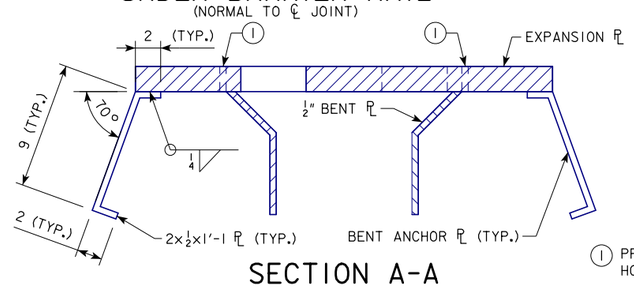

SECTION A-A

(1) PROVIDE 3/4"Φ AIR BLEED VENT HOLES @ 1'-6 CENTERS.

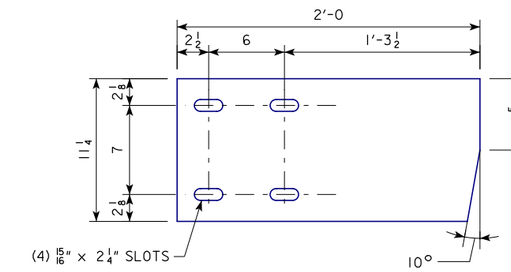

PLAN VIEW OF SHIMS

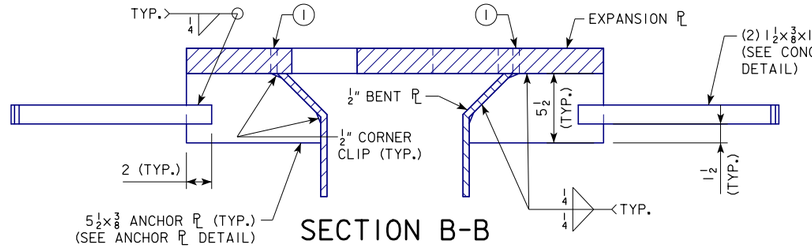

SECTION B-B

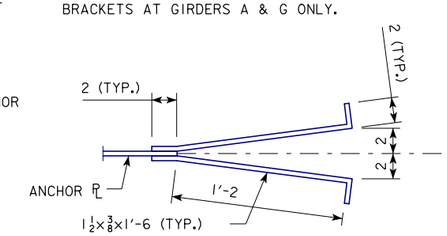

CONCRETE ANCHOR DETAIL

TABLE OF DIMENSIONS		
UNIT 2	DIMENSION	
	B	C
GIRDER A	8 1/2	5 3/4
GIRDER B	8 7/8	6 1/8
GIRDER C	8 7/8	6 1/8
GIRDER D	8 7/8	6 1/8
GIRDER E	8 7/8	6 1/8
GIRDER F	8 7/8	6 1/8
GIRDER G	8 1/2	5 3/4
UNIT 3	DIMENSION	
	B	C
GIRDER A	8 3/8	5 5/8
GIRDER B	8 7/8	6 1/8
GIRDER C	8 7/8	6 1/8
GIRDER D	8 7/8	6 1/8
GIRDER E	8 7/8	6 1/8
GIRDER F	8 7/8	6 1/8
GIRDER G	8 3/8	5 5/8

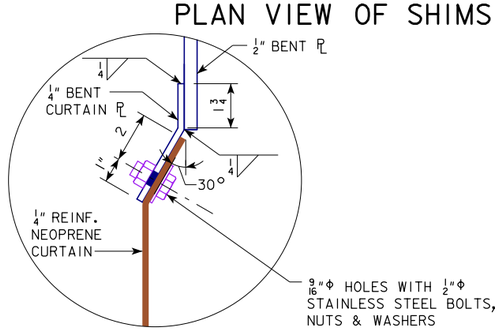

DETAIL H

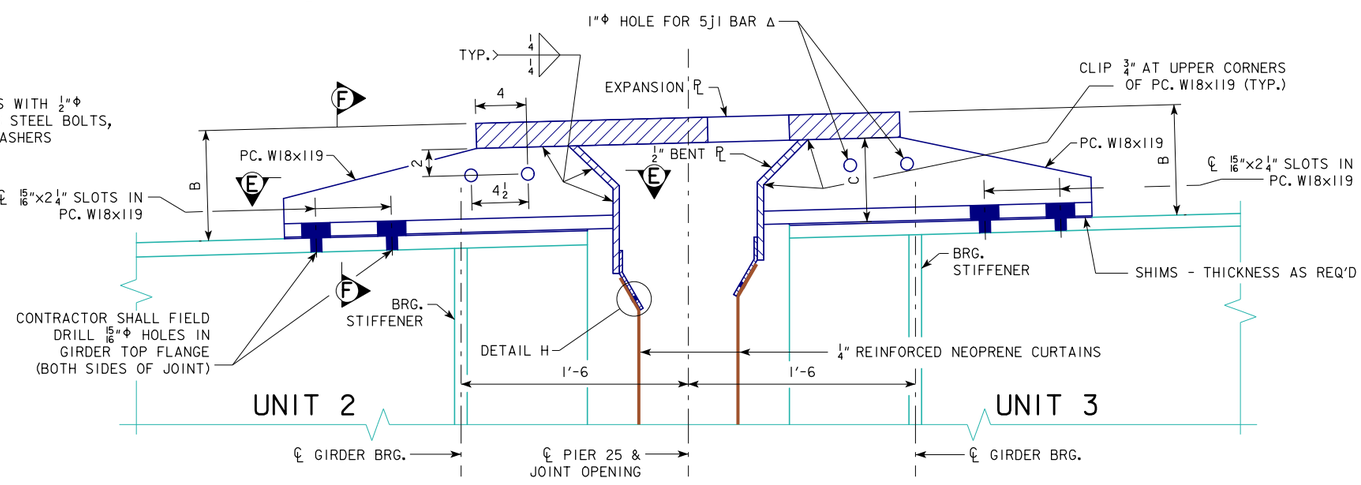

SECTION C-C (ALONG ℄ GIRDER)

NOTES:

SEE DESIGN SHEETS 249 -250 FOR NEOPRENE CURTAIN AND TROUGH DETAILS.

CONTRACTOR SHALL PROVIDE SHIM PACK CONSISTING OF 1/8" AND 1/4" SHIMS TOTALING 1" THICKNESS FOR EACH GIRDER. ALL SHIMS MAY NOT BE USED.

FINGER JOINT EXPANSION PLATE IS TO BE RECESSED 1/4" BELOW TOP OF SLAB.

NOTES:
SEE DES. SH. 263 FOR FINGER JOINT NOTES.

SEE DES. SH. 246 FOR LOCATION OF SECTIONS A-A, B-B AND C-C.

SEE DES. SH. 148 FOR CONCRETE END DIAPHRAGM DETAIL.

whks
engineers + planners + land surveyors

DESIGN FOR VARIABLE SKEW (L.A.)

2271'-6 x VARI. CONTINUOUS WELDED GIRDER BRIDGE-EBL W/14' BIKE TRAIL

138'-10 & 151'-0 7/8 END SPANS MULTIPLE LENGTH INTERIOR SPANS

FINGER JOINT DTLS. - EB JT. 25

STA. 6792+60.93 - 52' LEFT ℄ I-74 OCTOBER, 2015

SCOTT COUNTY

IOWA DEPARTMENT OF TRANSPORTATION - HIGHWAY DIVISION

DESIGN SHEET NO. 247 OF 282 FILE NO. 30253 DESIGN NO. 3408

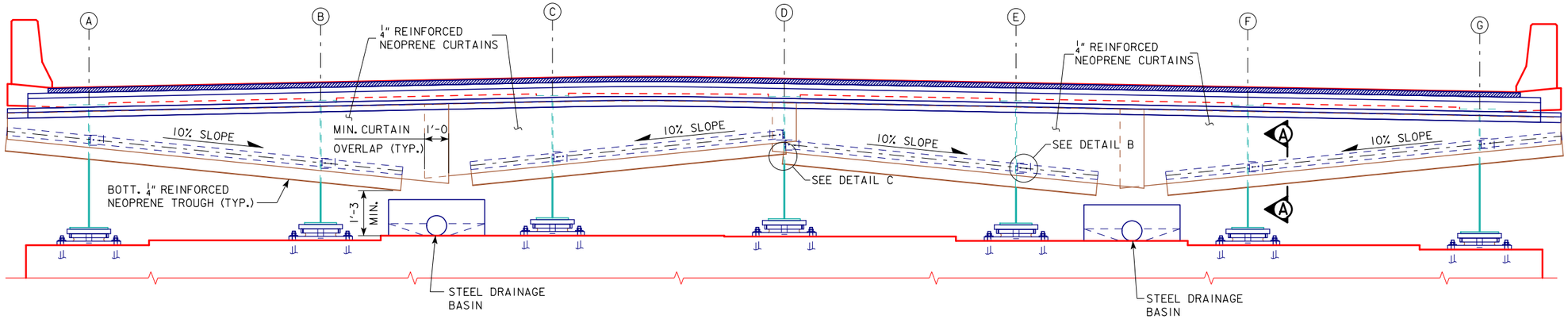

SECTION AT JOINT 25

(LOOKING DOWNSTATION NORMAL TO ℄ PIER)

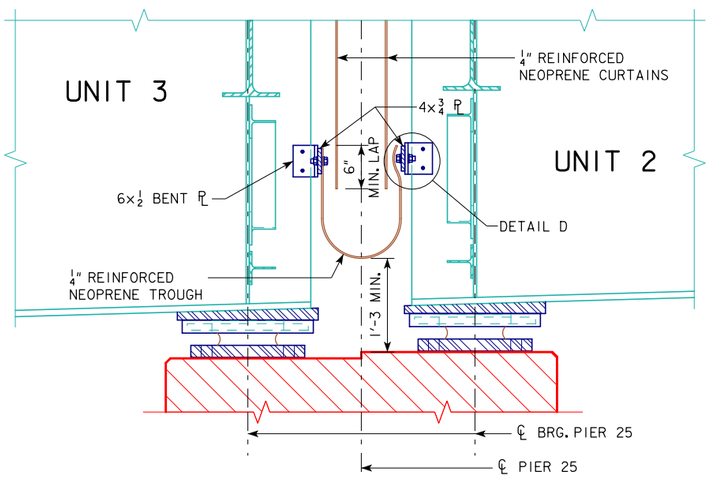

SECTION A-A

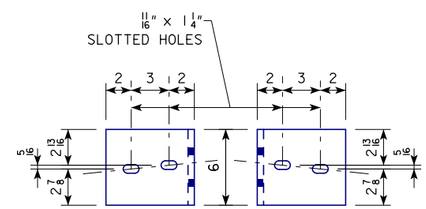

DETAIL OF 6x1/2 BENT PLS

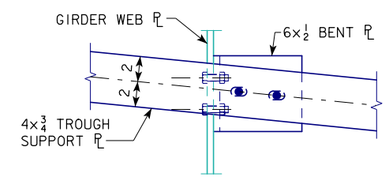

DETAIL B

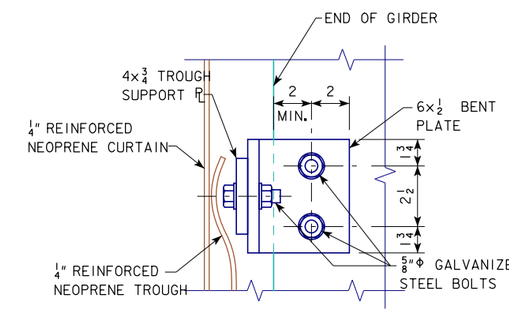

DETAIL D

NOTE:
NEOPRENE TROUGH IS ATTACHED TO THE 4x3/4 TROUGH PL ONLY AND DOES NOT BOLT TO THE 6x1/2 BENT PL.

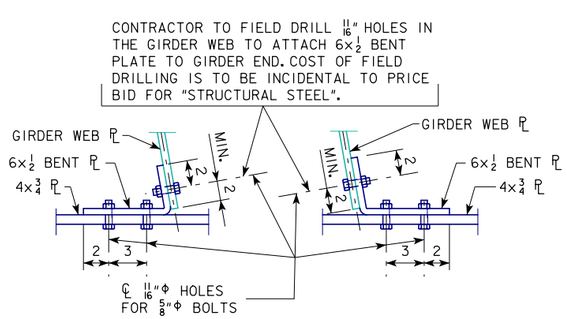

PLAN OF TROUGH SUPPORT CONNECTION TYPES

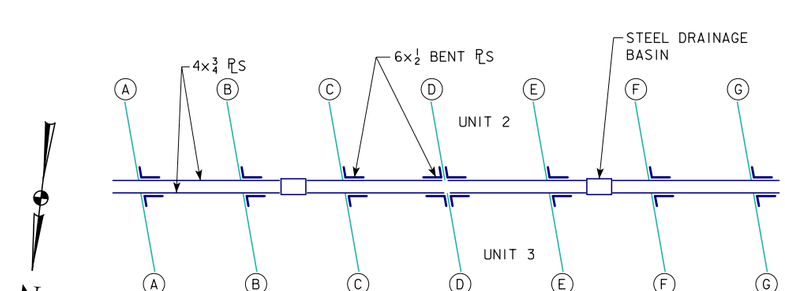

TROUGH HANGER BRACKET LAYOUT

SHOWING ORIENTATION OF 6x1/2 BENT PLS

NOTES:
SEE DESIGN SHEET 275 FOR DETAILS OF STEEL DRAINAGE BASIN.

SEE DESIGN SHEET 249 FOR DETAIL C.

STEEL TRAFFIC RAILING NOT SHOWN.

whks
engineers + planners + land surveyors

DESIGN FOR VARIABLE SKEW (L.A.)

2271'-6 x VARI. CONTINUOUS WELDED GIRDER BRIDGE-EBL W/14' BIKE TRAIL

138'-10 & 151'-0 7/8 END SPANS MULTIPLE LENGTH INTERIOR SPANS

JT. DRAINAGE DTLS. - EB JT. 25

STA. 6792+60.93 - 52' LEFT ℄ I-74 OCTOBER, 2015

SCOTT COUNTY

IOWA DEPARTMENT OF TRANSPORTATION - HIGHWAY DIVISION

DESIGN SHEET NO. 248 OF 282 FILE NO. 30253 DESIGN NO. 3408

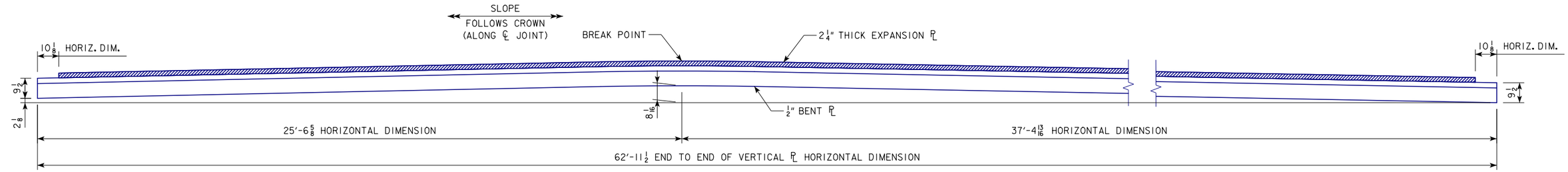

VIEW OF FINGER JOINT PLATE ASSEMBLY

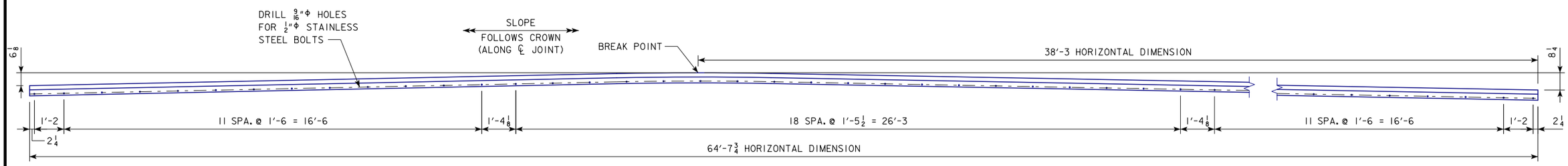

VIEW OF 5" X 1/4" BENT CURTAIN PL

(SEE DETAIL 'H' ON DES. SH. 247 FOR DETAIL)

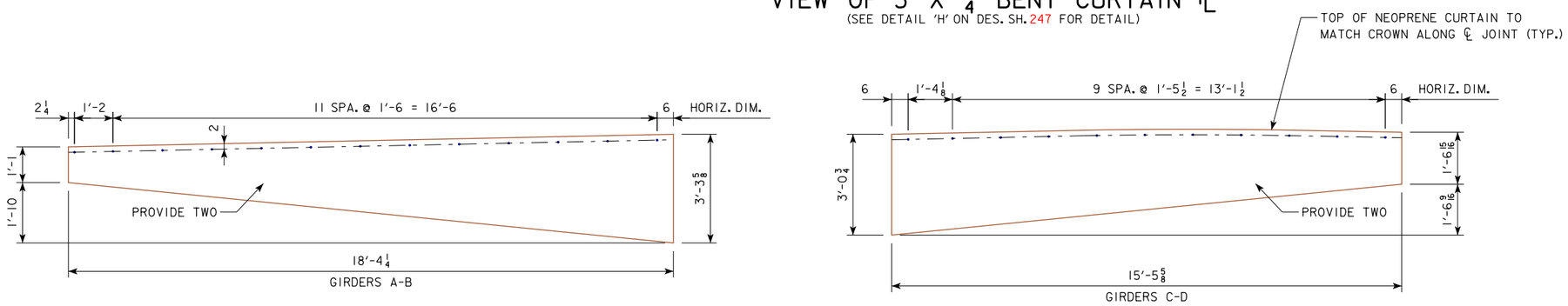

ELEVATION VIEW - REINFORCED NEOPRENE CURTAIN

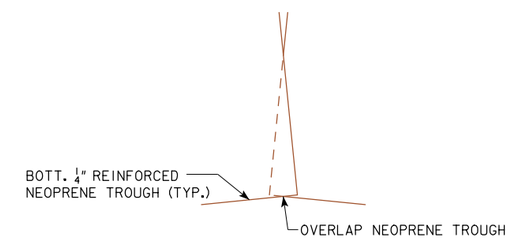

DETAIL C

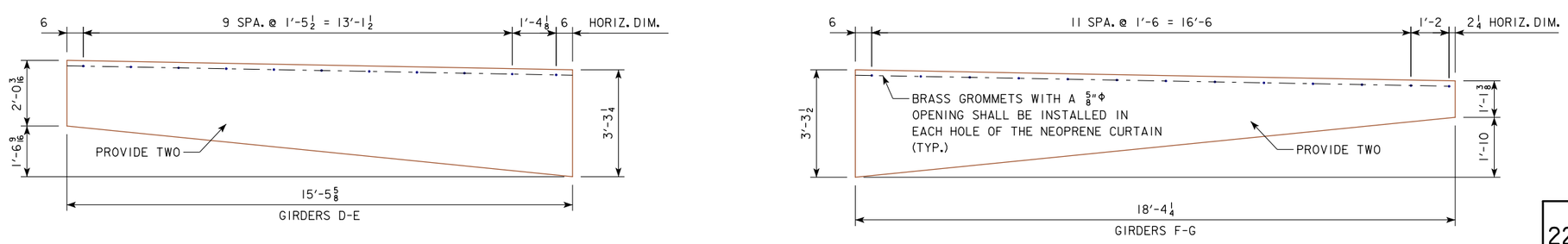

ELEVATION VIEW - REINFORCED NEOPRENE CURTAIN

NOTES:

THE CONTRACTOR HAS THE OPTION OF CUTTING THE EXPANSION PL AT THE BREAK POINT TO ACCOUNT FOR THE CROSS SLOPE TRANSITION. A 1/2" GROOVE WELD SHALL BE USED ALL AROUND THE EXPANSION PL AND A 1/4" GROOVE WELD SHALL BE USED ALL AROUND THE 1/2" BENT PL TO CONNECT THE PLS TOGETHER. ALL SURFACES NOT IN CONTACT WITH CONCRETE ARE TO BE GROUND FLUSH.

ALL VIEWS LOOKING DOWNSTATION NORMAL TO ℄ JOINT.

SEE DESIGN SHEET 250 FOR REINFORCED NEOPRENE NOTES.

SEE DESIGN SHEET 248 FOR LOCATION OF DETAIL C.

whks
engineers + planners + land surveyors

DESIGN FOR VARIABLE SKEW (L.A.)

2271'-6 x VARI. CONTINUOUS WELDED GIRDER BRIDGE-EBL W/14' BIKE TRAIL

138'-10 & 151'-0 7/8 END SPANS MULTIPLE LENGTH INTERIOR SPANS

JT. DRAINAGE DTLS. - EB JT. 25

STA. 6792+60.93 - 52' LEFT ℄ I-74 OCTOBER, 2015

SCOTT COUNTY

IOWA DEPARTMENT OF TRANSPORTATION - HIGHWAY DIVISION

DESIGN SHEET NO. 249 OF 282 FILE NO. 30253 DESIGN NO. 3408

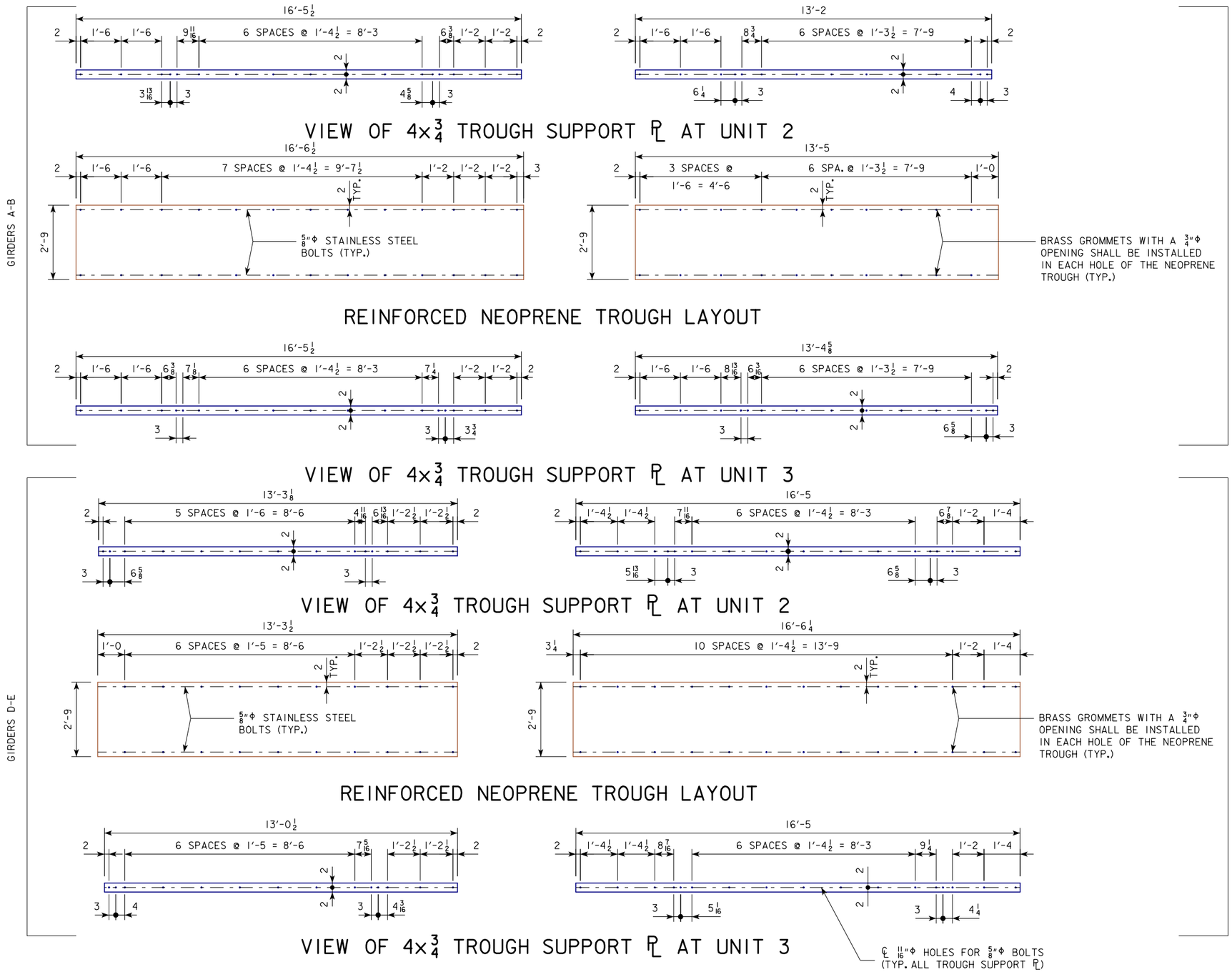

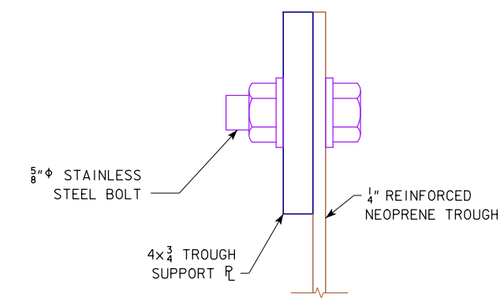

REINFORCED NEOPRENE TROUGH CONNECTION DETAIL

REINFORCED NEOPRENE NOTES:

THE ELASTOMER COMPOUND FOR CURTAINS AND TROUGHS SHALL BE IN ACCORDANCE WITH TABLE B OF ARTICLE 4195.02 OF THE STANDARD SPECIFICATIONS EXCEPT THE TENSILE STRENGTH SHALL BE 1500 psi MINIMUM OR IT SHALL BE (EPDM) ETHYLENE PROPYLENE DIENE MONOMER (ASTM D 2000, LINE CALL-OUTS 3BA, 515, A15, B13, F17, C12, K21).

THE BID ITEM "REINFORCED NEOPRENE" SHALL INCLUDE ALL COSTS FOR FURNISHING AND INSTALLING THE 1/4" REINFORCED NEOPRENE CURTAINS AND TROUGHS. THE CONTRACTOR WILL BE PAID FOR THE ACTUAL AMOUNT INSTALLED ON A SQUARE FOOT BASIS BASED ON THE PRICE BID PER SQUARE FOOT.

THE FURNISHING AND INSTALLATION OF ALL NECESSARY BOLTS, WASHERS, NUTS, AND PLATES ARE NOT INCLUDED IN THIS WORK AND SHALL BE PAID FOR UNDER THE BID ITEM "EXPANSION JOINT (FINGER PLATE TYPE)".

whks
engineers + planners + land surveyors

DESIGN FOR VARIABLE SKEW (L.A.)

2271'-6 x VARI. CONTINUOUS WELDED GIRDER BRIDGE-EBL W/14' BIKE TRAIL

138'-10 & 151'-0 7/8 END SPANS MULTIPLE LENGTH INTERIOR SPANS

JT. DRAINAGE DTLS. - EB JT. 25

STA. 6792+60.93 - 52' LEFT ℄ I-74 OCTOBER, 2015

SCOTT COUNTY

IOWA DEPARTMENT OF TRANSPORTATION - HIGHWAY DIVISION

DESIGN SHEET NO. 250 OF 282 FILE NO. 30253 DESIGN NO. 3408

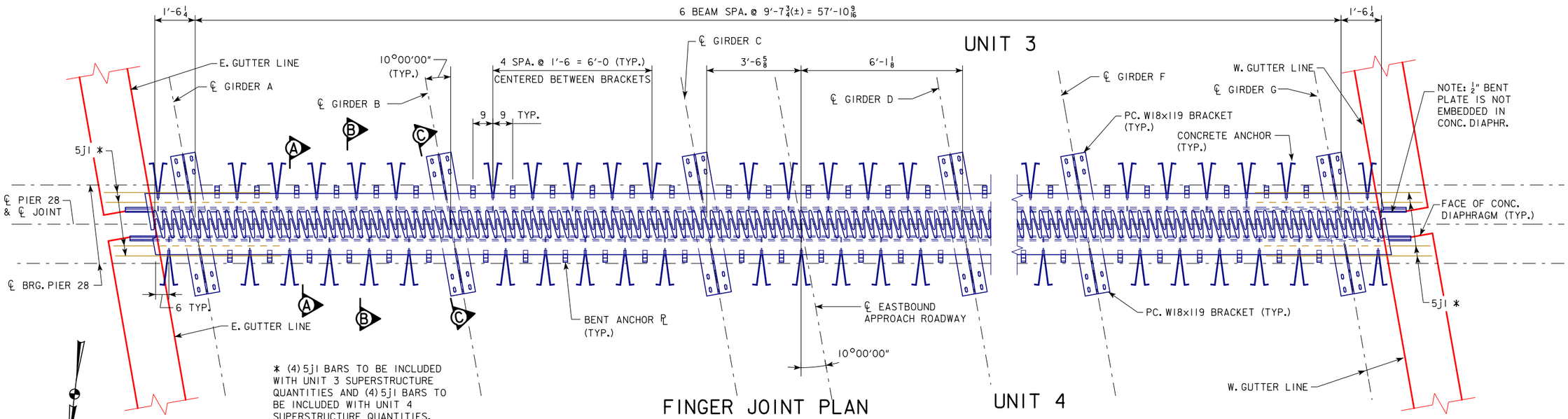

FINGER JOINT PLAN
EB PIER 28

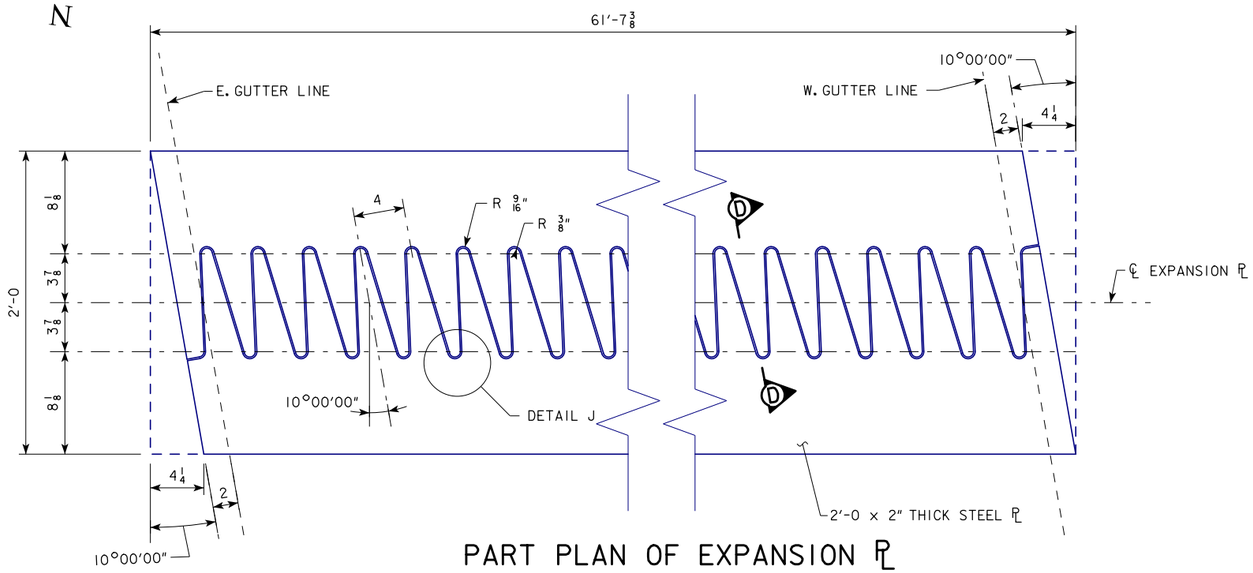

PART PLAN OF EXPANSION PL
SHOWING TOOTH LAYOUT

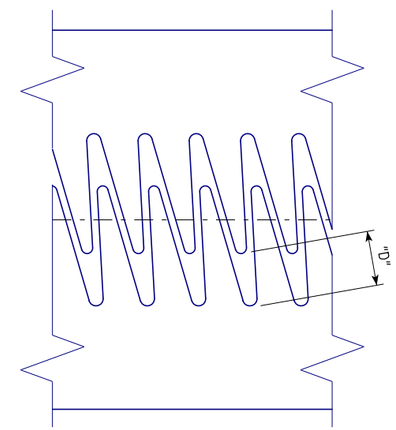

JOINT SETTING DETAIL

FINGER JOINT SETTINGS

TEMPERATURE	JOINT SETTING "D"
10°	5 3/8
15°	5 3/16
20°	5 1/16
25°	4 7/8
30°	4 11/16
35°	4 1/2
40°	4 5/16
45°	4 1/8
50°	3 15/16
55°	3 13/16
60°	3 5/8
65°	3 7/16
70°	3 1/4
75°	3 1/16
80°	2 7/8
85°	2 3/4
90°	2 9/16

NOTE: TEMPERATURES SHOWN ARE CONCRETE DECK TEMPERATURES ON THE UNDERSIDE OR SHADED PORTION OF THE DECK.

NOTES:
BARRIER RAIL NOT SHOWN.

SEE DES. SH. 263 FOR FINGER JOINT NOTES.

SEE DES. SH. 252 FOR SECTIONS A-A, B-B AND C-C.

SEE DES. SH. 148 FOR CONCRETE END DIAPHRAGM DETAIL.

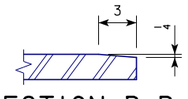

SECTION D-D

NOTE: TOP OF EXPANSION DEVICE IS TO BE PARALLEL TO GRADE. FLAME CUT FROM 2'-0 x 2" PL. BEVEL EACH TOOTH 1/4" x 3".

NOTE: DIMENSIONS ON THIS PLAN ARE HORIZONTAL ONLY. SEE ACTUAL PLATE SIZES BELOW THAT ARE ALONG CROSS SLOPE.

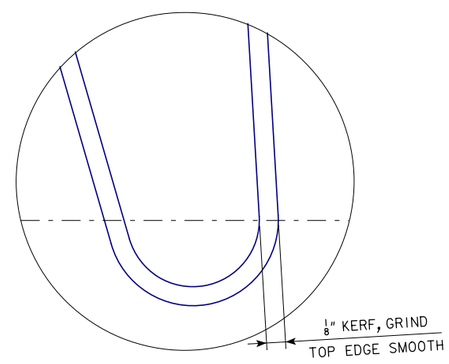

DETAIL J

whks
engineers + planners + land surveyors

DESIGN FOR VARIABLE SKEW (L.A.)

2271'-6 x VARI. CONTINUOUS WELDED GIRDER BRIDGE-EBL W/14' BIKE TRAIL

138'-10 & 151'-0 7/8 END SPANS MULTIPLE LENGTH INTERIOR SPANS

FINGER JOINT DTLS. - EB JT. 28

STA. 6792+60.93 - 52' LEFT ℄ I-74 OCTOBER, 2015

SCOTT COUNTY

IOWA DEPARTMENT OF TRANSPORTATION - HIGHWAY DIVISION

DESIGN SHEET NO. 251 OF 282 FILE NO. 30253 DESIGN NO. 3408

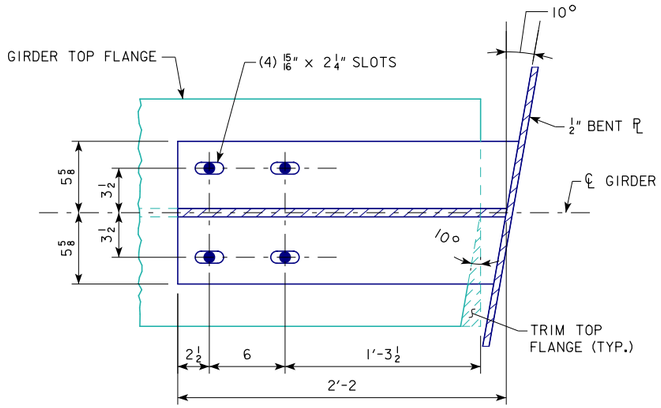

SECTION E-E

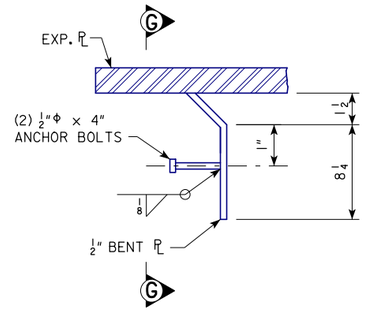

ELEVATION OF 1/2" BENT PL UNDER BARRIER RAIL
(NORMAL TO ℄ JOINT)

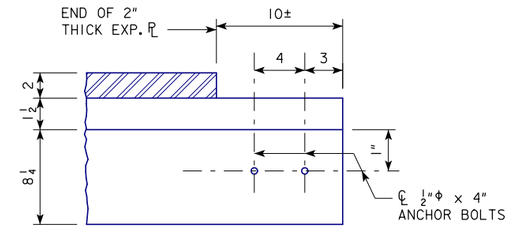

SECTION G-G

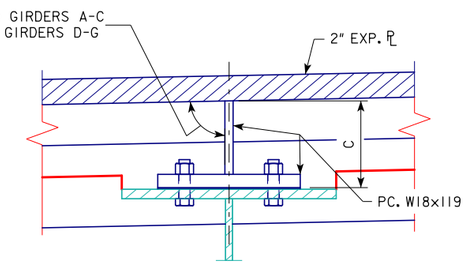

SECTION F-F

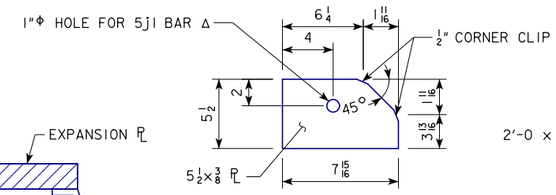

ANCHOR PL DETAIL

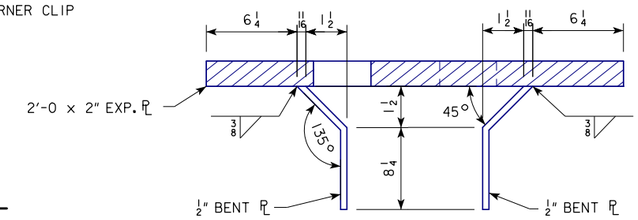

TYPICAL SECTION OF EXPANSION DEVICE NORMAL TO ℄ JOINT

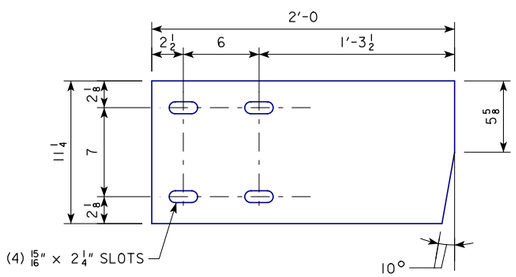

PLAN VIEW OF SHIMS

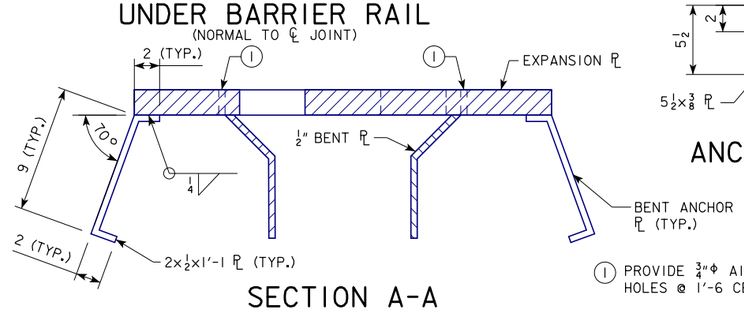

SECTION A-A

① PROVIDE 3/4"Φ AIR BLEED VENT HOLES @ 1'-6 CENTERS.

Δ 1"Φ HOLES DRILLED IN EXTERIOR AND FIRST INTERIOR 5 1/2x3/8 ANCHOR PLS EACH SIDE OF JOINT AND PC. W18x119 BRACKETS AT GIRDERS A & G ONLY.

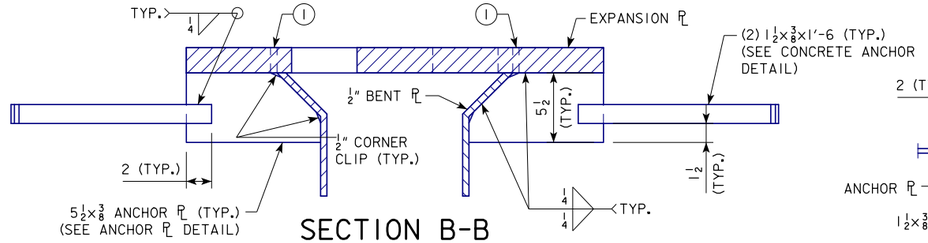

SECTION B-B

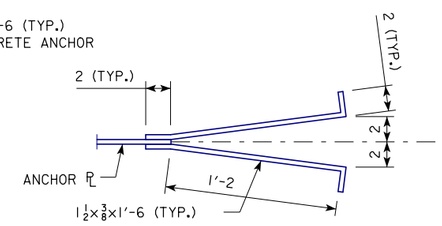

CONCRETE ANCHOR DETAIL

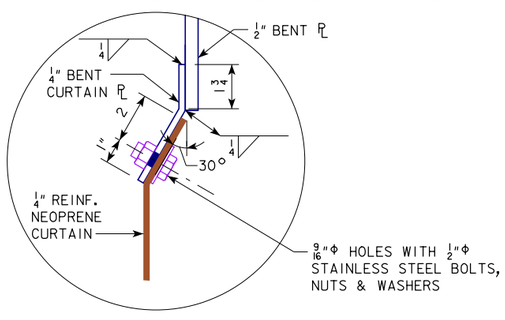

DETAIL H

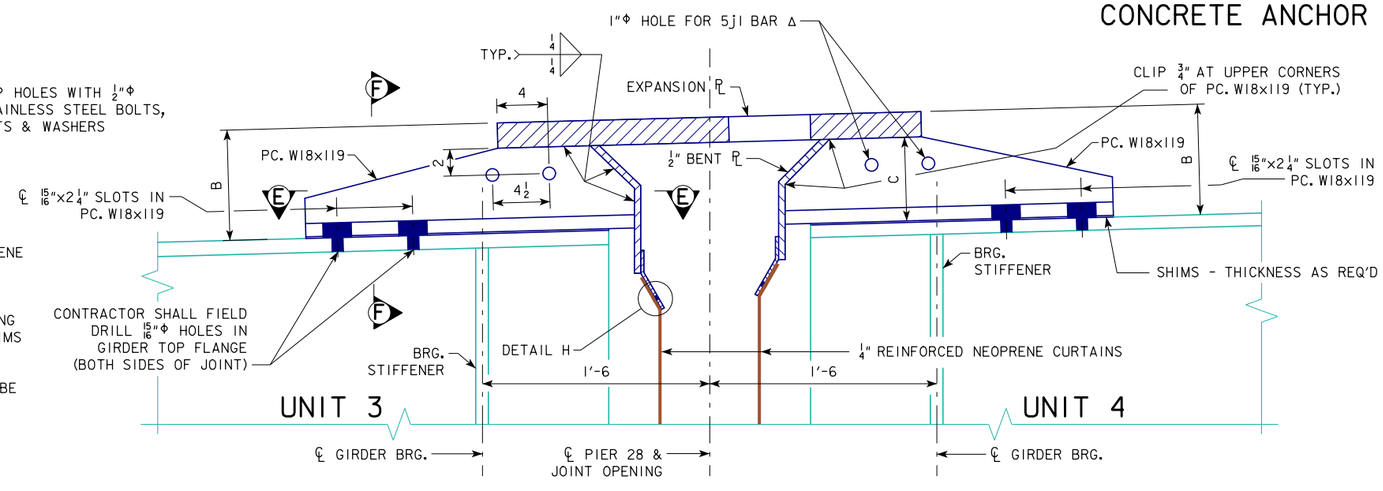

SECTION C-C (ALONG ℄ GIRDER)

NOTES:

SEE DESIGN SHEETS 254-255 FOR NEOPRENE CURTAIN AND TROUGH DETAILS.

CONTRACTOR SHALL PROVIDE SHIM PACK CONSISTING OF 1/8" AND 1/4" SHIMS TOTALING 1" THICKNESS FOR EACH GIRDER. ALL SHIMS MAY NOT BE USED.

FINGER JOINT EXPANSION PLATE IS TO BE RECESSED 1/4" BELOW TOP OF SLAB.

TABLE OF DIMENSIONS

UNIT 3	DIMENSION	
	B	C
GIRDER A	8 3/8	5 7/8
GIRDER B	8 7/8	6 3/8
GIRDER C	8 7/8	6 3/8
GIRDER D	8 7/8	6 3/8
GIRDER E	8 7/8	6 3/8
GIRDER F	8 7/8	6 3/8
GIRDER G	8 3/8	5 7/8

UNIT 4	DIMENSION	
	B	C
GIRDER A	8 3/8	5 7/8
GIRDER B	8 5/8	6 1/8
GIRDER C	8 5/8	6 1/8
GIRDER D	8 5/8	6 1/8
GIRDER E	8 5/8	6 1/8
GIRDER F	8 5/8	6 1/8
GIRDER G	8 3/8	5 7/8

NOTES:
SEE DES. SH. 263 FOR FINGER JOINT NOTES.

SEE DES. SH. 251 FOR LOCATION OF SECTIONS A-A, B-B AND C-C.

SEE DES. SH. 148 FOR CONCRETE END DIAPHRAGM DETAIL.

whks
engineers + planners + land surveyors

DESIGN FOR VARIABLE SKEW (L.A.)

227'-6 x VARI. CONTINUOUS WELDED GIRDER BRIDGE-EBL W/14' BIKE TRAIL

138'-10 & 151'-0 7/8 END SPANS MULTIPLE LENGTH INTERIOR SPANS

FINGER JOINT DTLS. - EB JT. 28

STA. 6792+60.93 - 52' LEFT ℄ I-74 OCTOBER, 2015

SCOTT COUNTY

IOWA DEPARTMENT OF TRANSPORTATION - HIGHWAY DIVISION

DESIGN SHEET NO. 252 OF 282 FILE NO. 30253 DESIGN NO. 3408

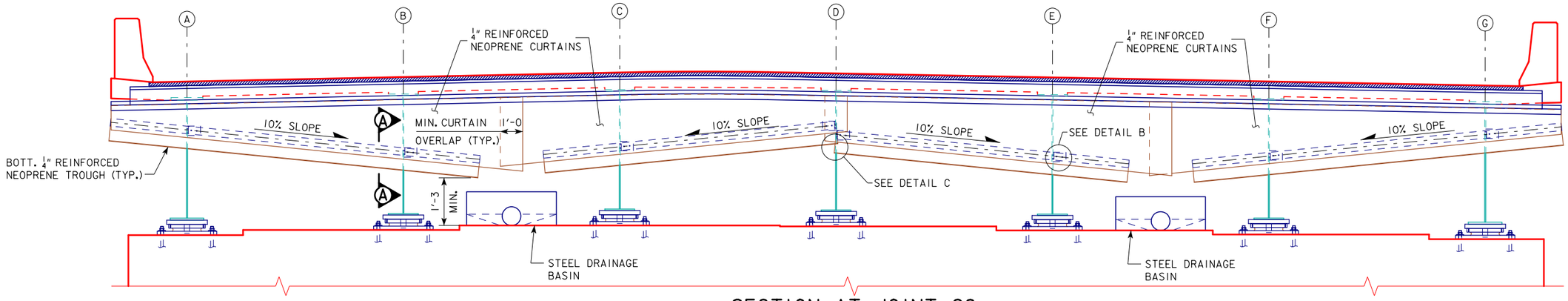

SECTION AT JOINT 28

(LOOKING DOWNSTATION NORMAL TO ℄ PIER)

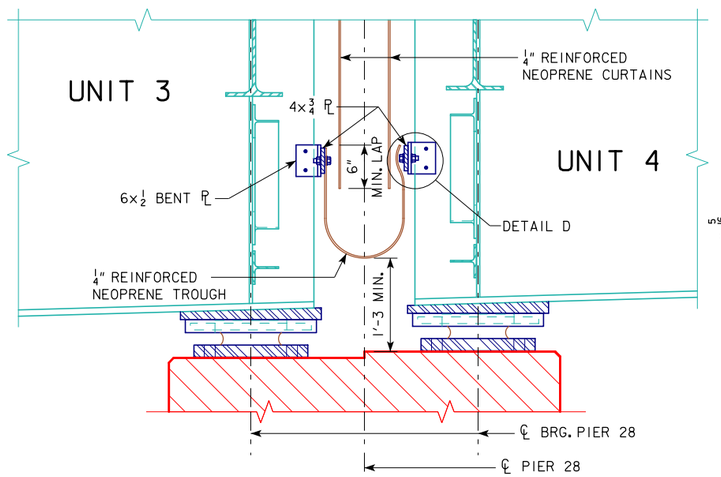

SECTION A-A

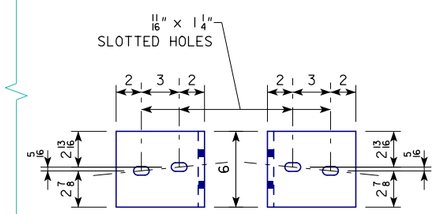

DETAIL OF 6x1/2 BENT PLS

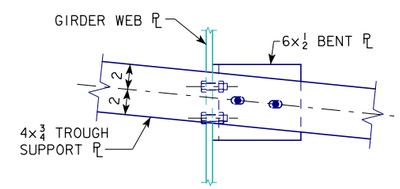

DETAIL B

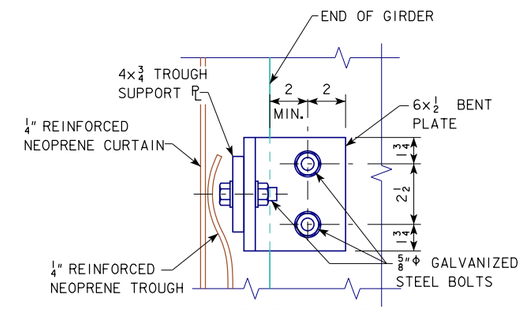

DETAIL D

NOTE:
NEOPRENE TROUGH IS ATTACHED TO THE 4x3/4 TROUGH PL ONLY AND DOES NOT BOLT TO THE 6x1/2 BENT PL.

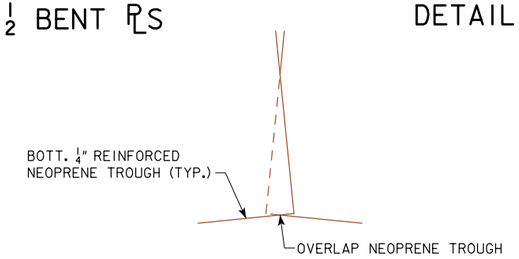

DETAIL C

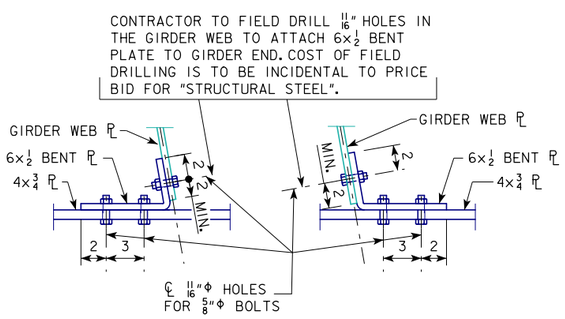

PLAN OF TROUGH SUPPORT CONNECTION TYPES

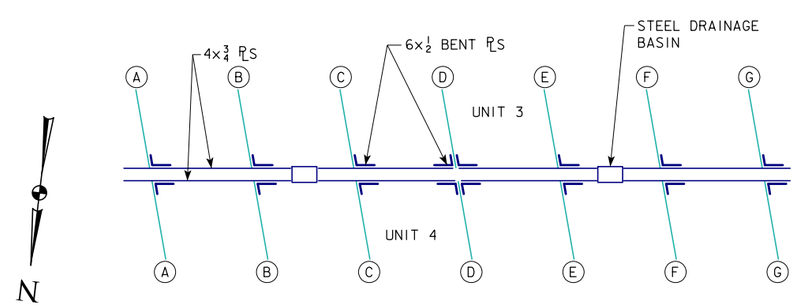

TROUGH HANGER BRACKET LAYOUT

SHOWING ORIENTATION OF 6x1/2 BENT PLS

NOTES:

SEE DESIGN SHEET 275 FOR DETAILS OF STEEL DRAINAGE BASIN.

STEEL TRAFFIC RAILING NOT SHOWN.

whks
engineers + planners + land surveyors

DESIGN FOR VARIABLE SKEW (L.A.)

2271'-6 x VARI. CONTINUOUS WELDED GIRDER BRIDGE-EBL W/14' BIKE TRAIL

138'-10 & 151'-0 7/8 END SPANS MULTIPLE LENGTH INTERIOR SPANS

JT. DRAINAGE DTLS. - EB JT. 28

STA. 6792+60.93 - 52' LEFT ℄ I-74 OCTOBER, 2015

SCOTT COUNTY

IOWA DEPARTMENT OF TRANSPORTATION - HIGHWAY DIVISION

DESIGN SHEET NO. 253 OF 282 FILE NO. 30253 DESIGN NO. 3408

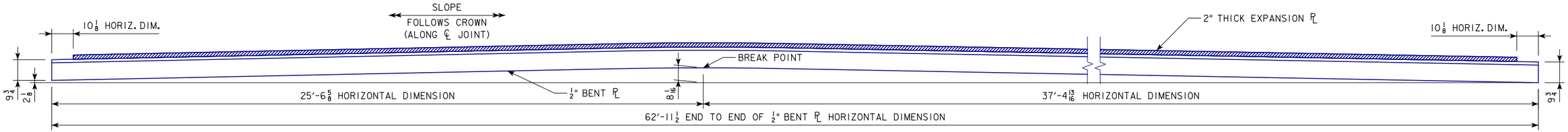

VIEW OF FINGER JOINT PLATE ASSEMBLY

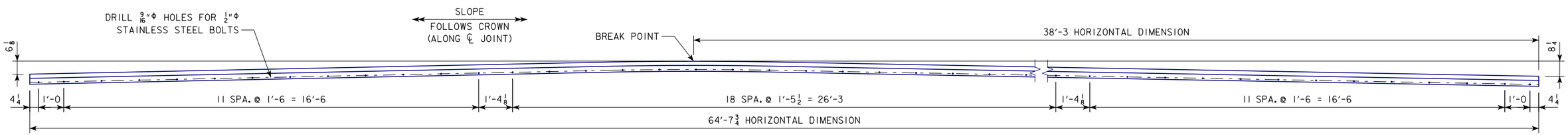

VIEW OF 5×1/4 BENT PL

(SEE DETAIL H ON DES. SH. 252 FOR DETAIL)

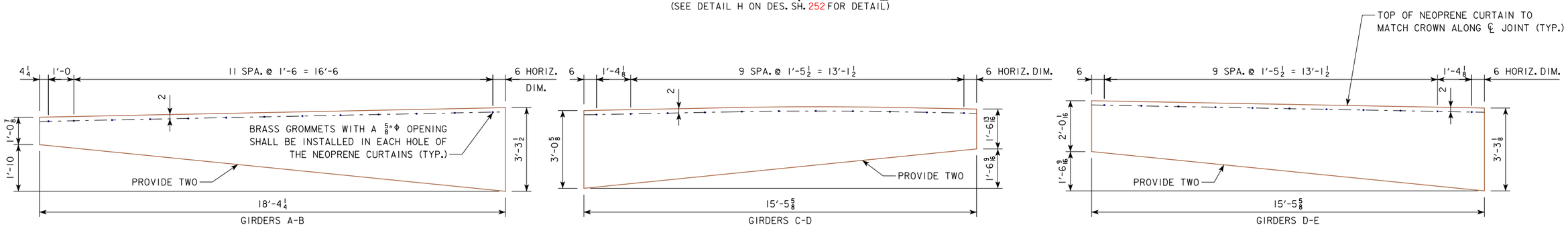

ELEVATION VIEW - REINFORCED NEOPRENE CURTAIN

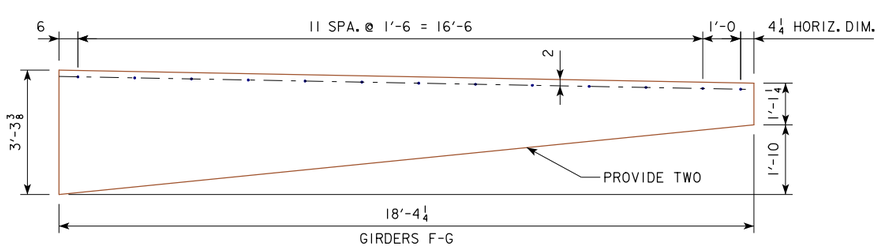

ELEVATION VIEW - REINFORCED NEOPRENE CURTAIN

NOTES:

THE CONTRACTOR HAS THE OPTION OF CUTTING THE EXPANSION PL AT THE BREAK POINT TO ACCOUNT FOR THE CROSS SLOPE TRANSITION. A 1/2" GROOVE WELD SHALL BE USED ALL AROUND THE EXPANSION PL AND A 1/4" GROOVE WELD SHALL BE USED ALL AROUND THE 1/2" BENT PL TO CONNECT THE PLS TOGETHER. ALL SURFACES NOT IN CONTACT WITH CONCRETE ARE TO BE GROUND FLUSH.

ALL VIEWS LOOKING DOWNSTATION NORMAL TO ℄ JOINT.

SEE DESIGN SHEET 250 FOR REINFORCED NEOPRENE NOTES.

whks
engineers + planners + land surveyors

DESIGN FOR VARIABLE SKEW (L.A.)

2271'-6 x VARI. CONTINUOUS WELDED GIRDER BRIDGE-EBL W/14' BIKE TRAIL

138'-10 & 151'-0 7/8 END SPANS MULTIPLE LENGTH INTERIOR SPANS

JT. DRAINAGE DTLS. - EB JT. 28

STA. 6792+60.93 - 52' LEFT ℄ I-74 OCTOBER, 2015

SCOTT COUNTY

IOWA DEPARTMENT OF TRANSPORTATION - HIGHWAY DIVISION

DESIGN SHEET NO. 254 OF 282 FILE NO. 30253 DESIGN NO. 3408

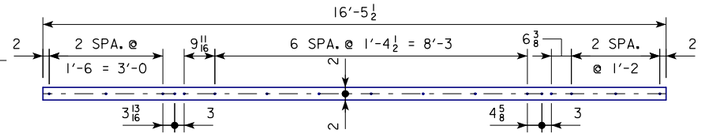

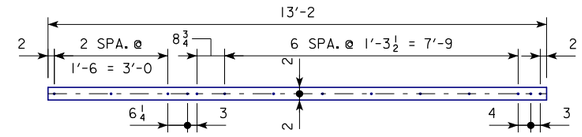

VIEW OF 4x3/4 TROUGH SUPPORT ℙ AT UNIT 3

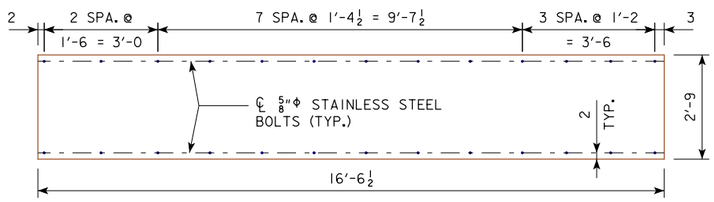

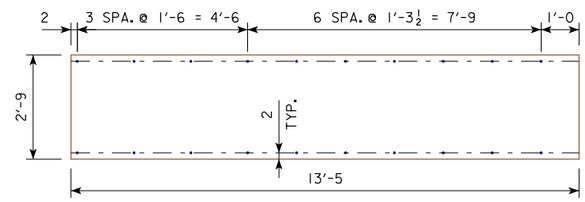

REINFORCED NEOPRENE TROUGH LAYOUT

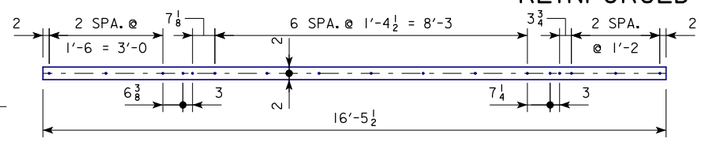

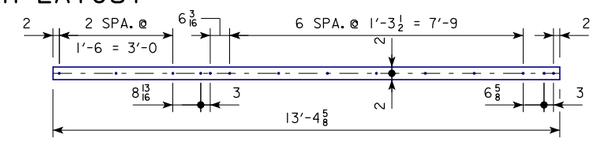

VIEW OF 4x3/4 TROUGH SUPPORT ℙ AT UNIT 4

GIRDERS A-B

GIRDERS C-D

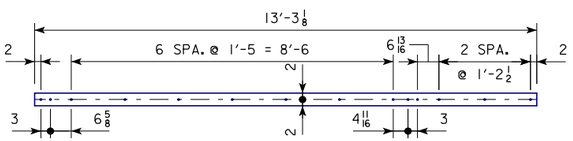

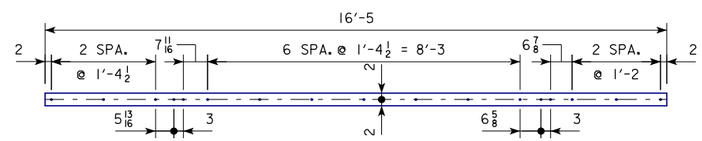

VIEW OF 4x3/4 TROUGH SUPPORT ℙ AT UNIT 3

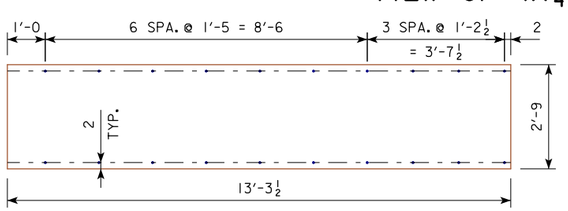

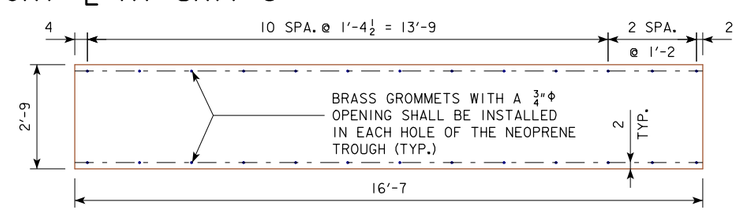

REINFORCED NEOPRENE TROUGH LAYOUT

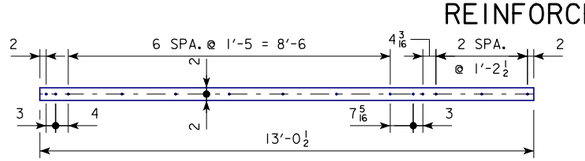

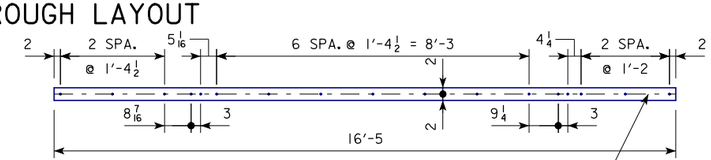

VIEW OF 4x3/4 TROUGH SUPPORT ℙ AT UNIT 4

℄ 11/16"Φ HOLES FOR 5/8"Φ BOLTS (TYPICAL ALL TROUGH SUPPORT ℙ)

GIRDERS D-E

GIRDERS F-G

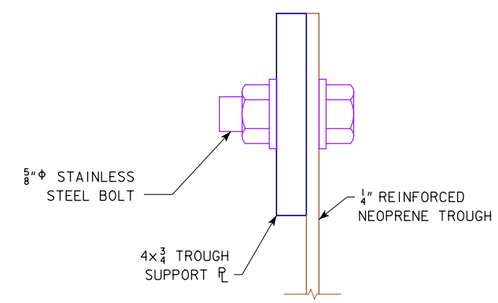

REINFORCED NEOPRENE TROUGH CONNECTION DETAIL

NOTE:

SEE DESIGN SHEET 250 FOR REINFORCED NEOPRENE NOTES.

whks
engineers + planners + land surveyors

DESIGN FOR VARIABLE SKEW (L.A.)

2271'-6 x VARI. CONTINUOUS WELDED GIRDER BRIDGE-EBL W/14' BIKE TRAIL

138'-10 & 151'-0 7/8 END SPANS MULTIPLE LENGTH INTERIOR SPANS

JT. DRAINAGE DTLS. - EB JT. 28

STA. 6792+60.93 - 52' LEFT ℄ I-74 OCTOBER, 2015

SCOTT COUNTY

IOWA DEPARTMENT OF TRANSPORTATION - HIGHWAY DIVISION

DESIGN SHEET NO. 255 OF 282 FILE NO. 30253 DESIGN NO. 3408

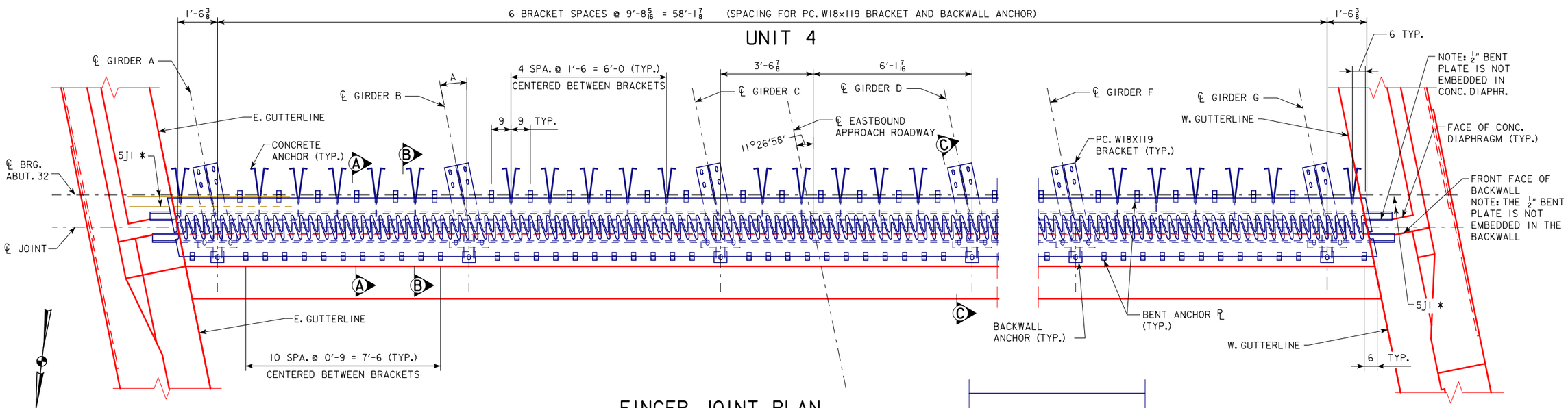

* (4) 5jl BARS TO BE INCLUDED WITH UNIT 4 SUPERSTRUCTURE QUANTITIES.

FINGER JOINT PLAN
EB ABUT. 32

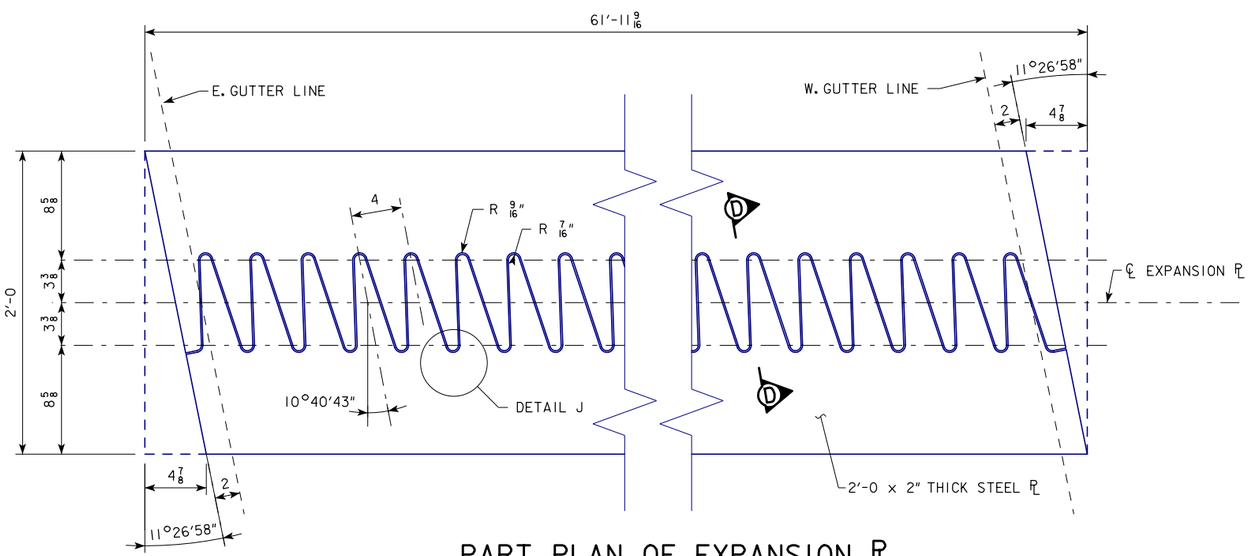

PART PLAN OF EXPANSION PL SHOWING TOOTH LAYOUT

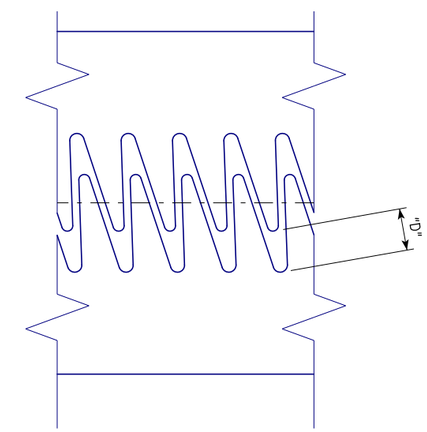

JOINT SETTING DETAIL

FINGER JOINT SETTINGS

TEMPERATURE	JOINT SETTING "D"
10°	4 5/8
15°	4 7/16
20°	4 5/16
25°	4 3/16
30°	4
35°	3 7/8
40°	3 3/4
45°	3 9/16
50°	3 7/16
55°	3 5/16
60°	3 1/8
65°	3
70°	2 7/8
75°	2 11/16
80°	2 9/16
85°	2 7/16
90°	2 1/4

NOTE: TEMPERATURES SHOWN ARE CONCRETE DECK TEMPERATURES ON THE UNDERSIDE OR SHADED PORTION OF THE DECK.

NOTES:
BARRIER RAIL NOT SHOWN.

SEE DES. SH. 263 FOR FINGER JOINT NOTES.

SEE DES. SH. 257 FOR SECTIONS A-A, B-B AND C-C.

SEE DES. SH. 148 FOR CONCRETE END DIAPHRAGM DETAIL.

SEE DES. SH. 257 FOR VALUE OF ANGLE A.

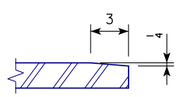

SECTION D-D

NOTE: TOP OF EXPANSION DEVICE IS TO BE PARALLEL TO GRADE. FLAME CUT FROM 2'-0 x 2" PL. BEVEL EACH TOOTH 1/4" x 3".

NOTE: DIMENSIONS ON THIS PLAN ARE HORIZONTAL ONLY. SEE ACTUAL PLATE SIZES BELOW THAT ARE ALONG CROSS SLOPE.

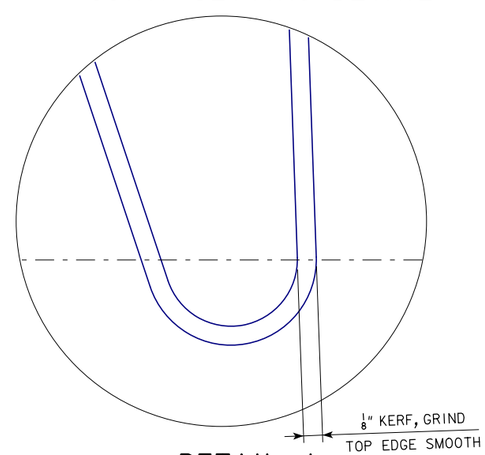

DETAIL J

whks
engineers + planners + land surveyors

DESIGN FOR VARIABLE SKEW (L.A.)

2271'-6 x VARI. CONTINUOUS WELDED GIRDER BRIDGE-EBL W/14' BIKE TRAIL

138'-10 & 151'-0 7/8 END SPANS MULTIPLE LENGTH INTERIOR SPANS

FINGER JOINT DTLS. - EB JT. 32

STA. 6792+60.93 - 52' LEFT ℄ I-74 OCTOBER, 2015

SCOTT COUNTY

IOWA DEPARTMENT OF TRANSPORTATION - HIGHWAY DIVISION

DESIGN SHEET NO. 256 OF 282 FILE NO. 30253 DESIGN NO. 3408

DESIGN TEAM CF / BB / MG	SCOTT COUNTY	PROJECT NUMBER BRFIM-074-1(200)5--05-82	SHEET NUMBER 257

NOTE: ALL PC. W18x119 MAY BE FABRICATED ASSUMING A 90° ANGLE. DUE TO CURVATURE OF THE GIRDERS, THE WEB OF EACH GIRDER WILL NOT BE ALIGNED WITH THE WEB OF EACH PC. W18x119. ADJUST THE HOLES IN THE TOP FLANGE OF THE GIRDERS AS NECESSARY. CONTRACTOR SHALL FIELD DRILL HOLES IN GIRDER TOP FLANGES FOR CONNECTING BRACKETS.

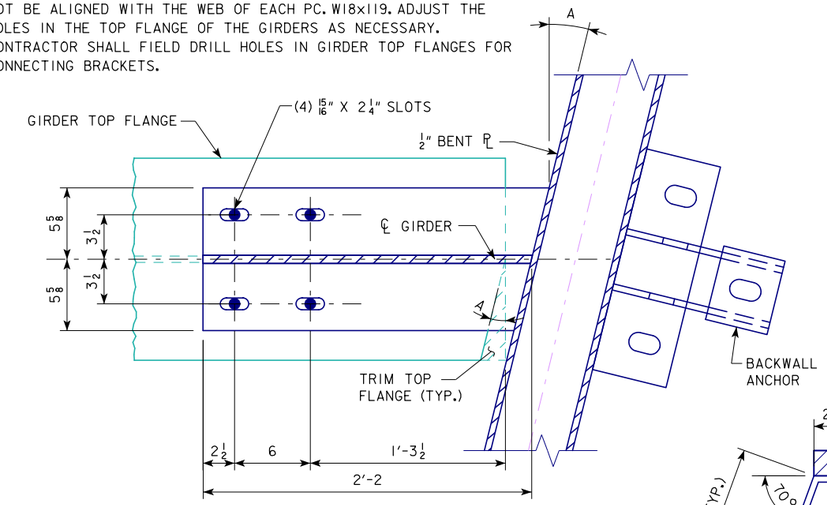

SECTION E-E

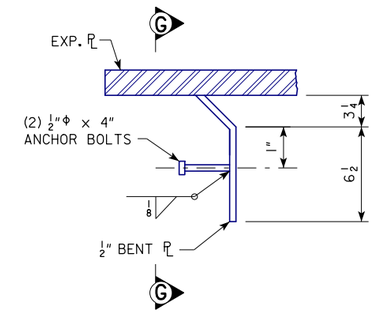

ELEVATION OF 1/2" BENT PL UNDER BARRIER RAIL
(NORMAL TO ℄ JOINT)

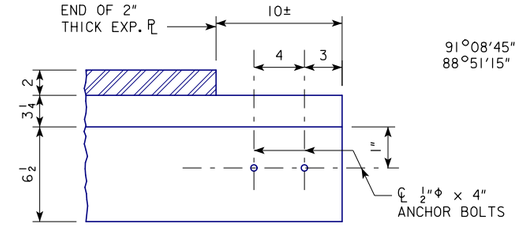

SECTION G-G

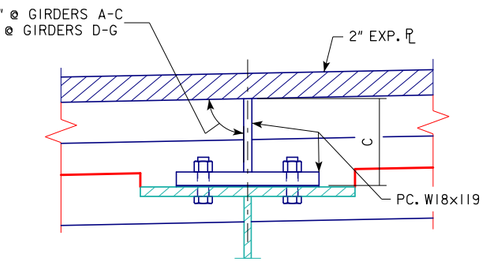

SECTION F-F

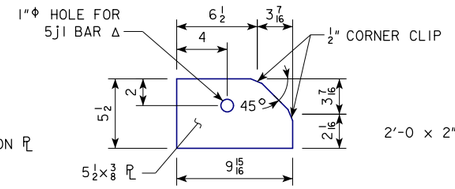

ANCHOR PL DETAIL

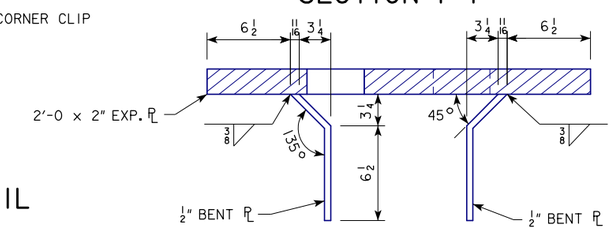

TYPICAL SECTION OF EXPANSION DEVICE NORMAL TO ℄ JOINT

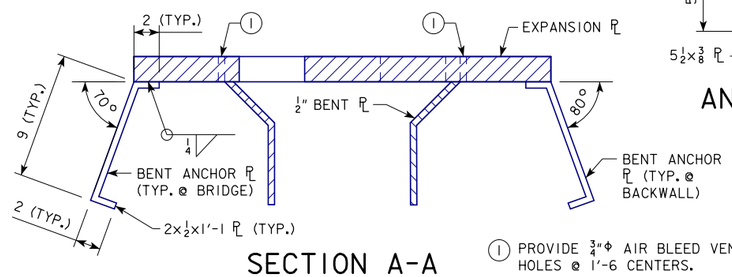

SECTION A-A

1 PROVIDE 3/4"Φ AIR BLEED VENT HOLES @ 1'-6 CENTERS.

Δ 1"Φ HOLES DRILLED IN EXTERIOR AND FIRST INTERIOR 5 1/2x3/8 ANCHOR PLS AND PC. W18x119 BRACKETS AT GIRDERS A & G ONLY.

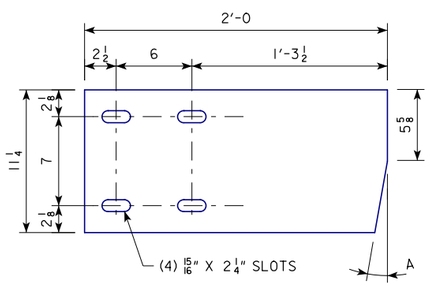

PLAN VIEW OF SHIMS

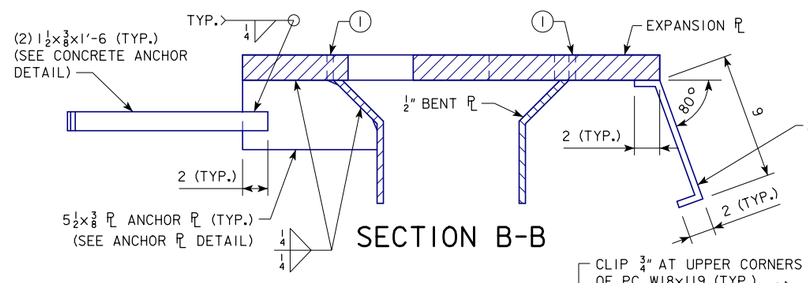

SECTION B-B

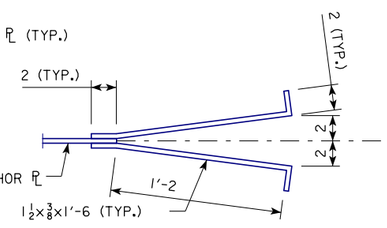

CONCRETE ANCHOR DETAIL

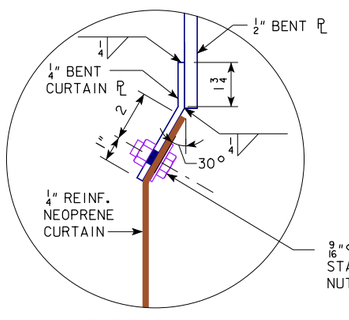

DETAIL H

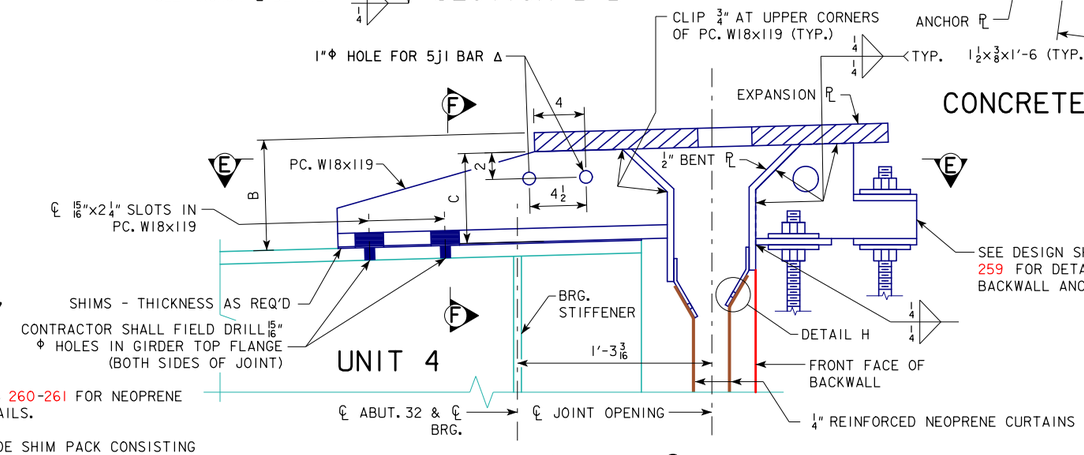

SECTION C-C (ALONG ℄ GIRDER)

NOTES: SEE DESIGN SHEETS 260-261 FOR NEOPRENE CURTAIN AND TROUGH DETAILS.

CONTRACTOR SHALL PROVIDE SHIM PACK CONSISTING OF 1/8" AND 1/4" SHIMS TOTALING 1" THICKNESS FOR EACH GIRDER. ALL SHIMS MAY NOT BE USED.

FINGER JOINT EXPANSION PLATE IS TO BE RECESSED 1/4" BELOW TOP OF SLAB.

TABLE OF DIMENSIONS

UNIT 4	DIMENSION		
	A	B	C
GIRDER A	11°25'32"	8 1/2	6
GIRDER B	11°26'00"	8 5/8	6 1/8
GIRDER C	11°26'29"	8 5/8	6 1/8
GIRDER D	11°26'57"	8 5/8	6 1/8
GIRDER E	11°27'25"	8 5/8	6 1/8
GIRDER F	11°27'54"	8 5/8	6 1/8
GIRDER G	11°28'22"	8 1/2	6

NOTES:
SEE DES. SH. 263 FOR FINGER JOINT NOTES.

SEE DES. SH. 256 FOR LOCATION OF SECTIONS A-A, B-B AND C-C.

SEE DES. SH. 148 FOR CONCRETE END DIAPHRAGM DETAIL.

whks
engineers + planners + land surveyors

DESIGN FOR VARIABLE SKEW (L.A.)

227'-6 x VARI. CONTINUOUS WELDED GIRDER BRIDGE-EBL W/14' BIKE TRAIL

138'-10 & 151'-0 7/8 END SPANS MULTIPLE LENGTH INTERIOR SPANS

FINGER JOINT DTLS. - EB JT. 32

STA. 6792+60.93 - 52' LEFT ℄ I-74 OCTOBER, 2015

SCOTT COUNTY

IOWA DEPARTMENT OF TRANSPORTATION - HIGHWAY DIVISION

DESIGN SHEET NO. 257 OF 282 FILE NO. 30253 DESIGN NO. 3408

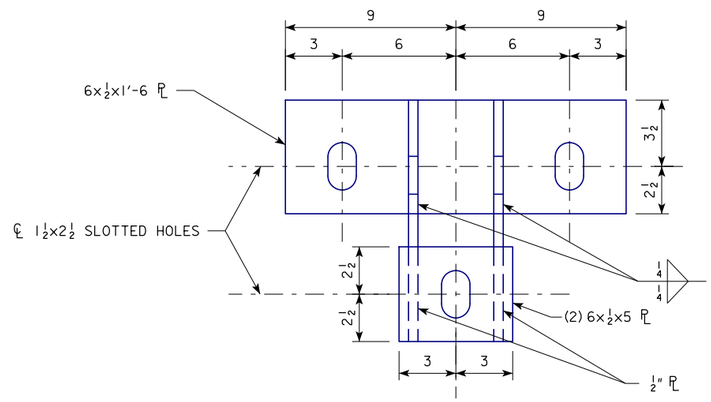

BACKWALL ANCHOR PLAN

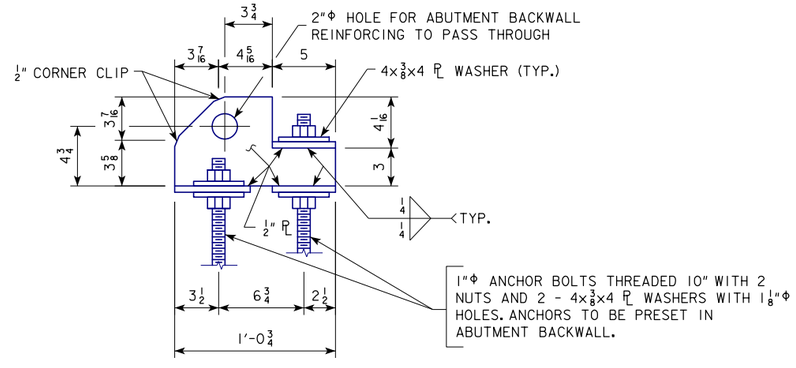

BACKWALL ANCHOR ELEVATION

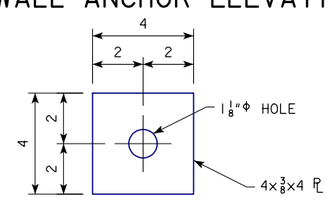

PLATE WASHER

NOTES:

SEE DES. SH. 263 FOR FINGER JOINT NOTES.

whks
engineers + planners + land surveyors

DESIGN FOR VARIABLE SKEW (L.A.)

227'-6 x VARI. CONTINUOUS WELDED GIRDER BRIDGE-EBL W/14' BIKE TRAIL

138'-10 & 151'-0⅞ END SPANS MULTIPLE LENGTH INTERIOR SPANS

FINGER JOINT DTLS. - EB JT. 32

STA. 6792+60.93 - 52' LEFT ℄ I-74 OCTOBER, 2015

SCOTT COUNTY

IOWA DEPARTMENT OF TRANSPORTATION - HIGHWAY DIVISION

DESIGN SHEET NO. 258 OF 282 FILE NO. 30253 DESIGN NO. 3408

DESIGN TEAM CF / BB / MG | SCOTT COUNTY | PROJECT NUMBER BRFIM-074-1(200)5--05-82 | SHEET NUMBER 259

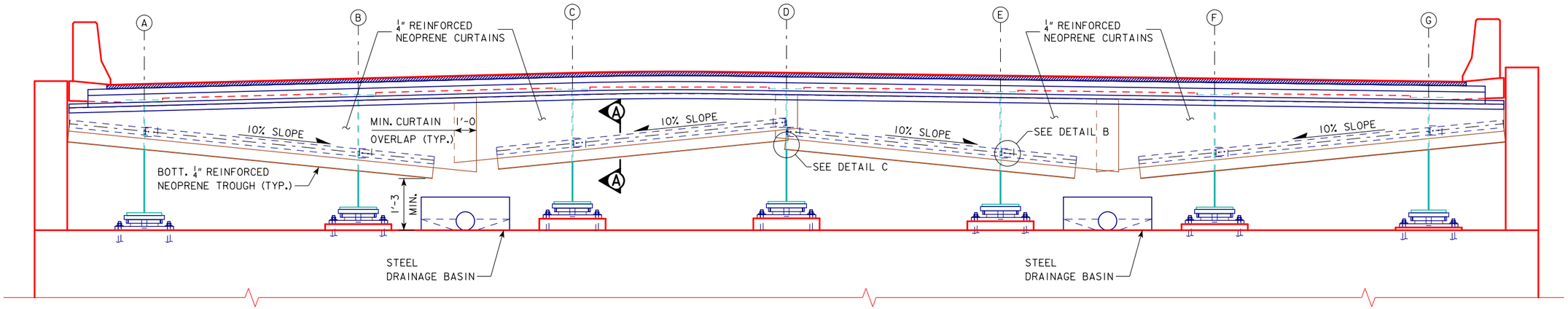

SECTION AT JOINT 32

(LOOKING DOWNSTATION NORMAL TO ℄ JOINT)

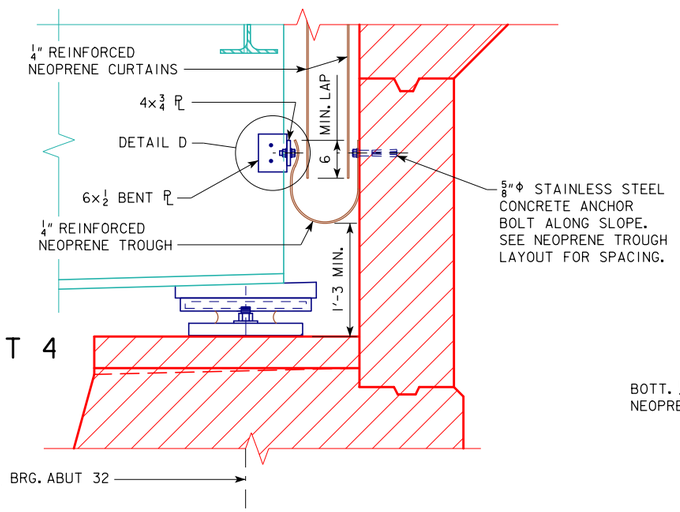

SECTION A-A

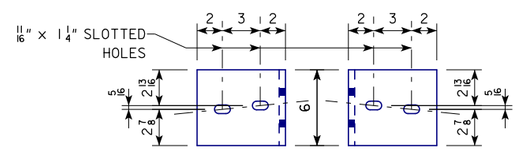

DETAIL OF 6x1/2 BENT PLS

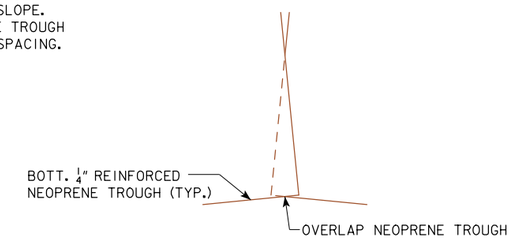

DETAIL C

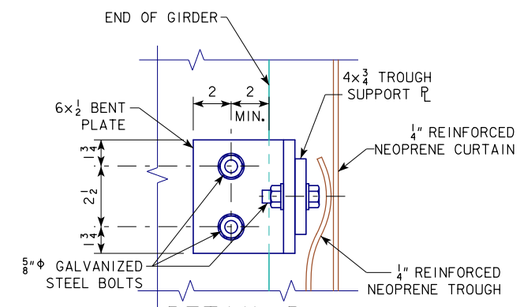

DETAIL D

NOTE:
NEOPRENE TROUGH IS ATTACHED TO THE 4x3/4 TROUGH PL ONLY AND DOES NOT BOLT TO THE 6x1/2 BENT PL.

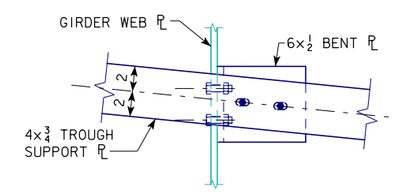

DETAIL B

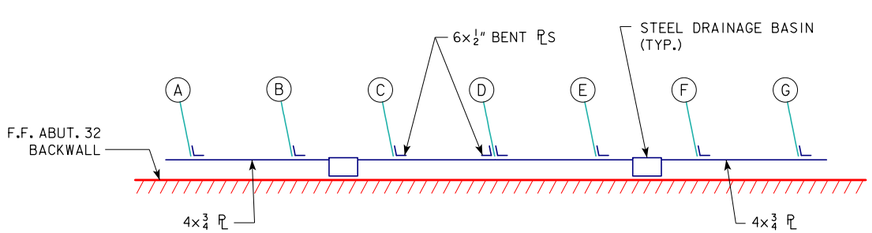

TROUGH HANGER BRACKET LAYOUT

SHOWING ORIENTATION OF 6x1/2" BENT PLS

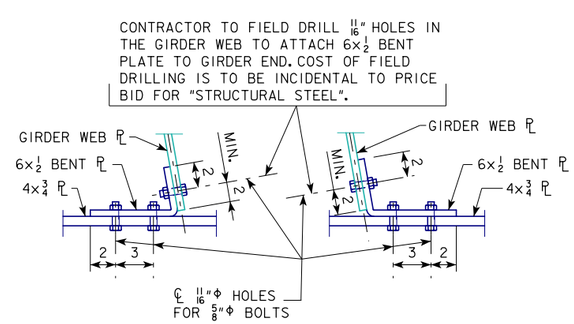

PLAN OF TROUGH SUPPORT CONNECTION TYPES

NOTES:

SEE DESIGN SHEET 275 FOR DETAILS OF STEEL DRAINAGE BASIN.

STEEL TRAFFIC RAILING NOT SHOWN.

whks
engineers + planners + land surveyors

DESIGN FOR VARIABLE SKEW (L.A.)

2271'-6 x VARI. CONTINUOUS WELDED GIRDER BRIDGE-EBL W/14' BIKE TRAIL

138'-10 & 151'-0 7/8 END SPANS MULTIPLE LENGTH INTERIOR SPANS

JT. DRAINAGE DTLS. - EB JT. 32

STA. 6792+60.93 - 52' LEFT ℄ I-74 OCTOBER, 2015

SCOTT COUNTY

IOWA DEPARTMENT OF TRANSPORTATION - HIGHWAY DIVISION

DESIGN SHEET NO. 259 OF 282 FILE NO. 30253 DESIGN NO. 3408

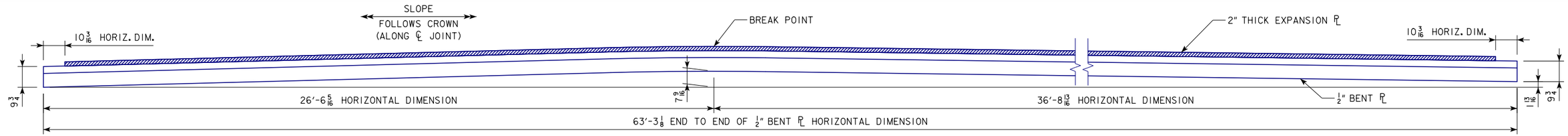

VIEW OF FINGER JOINT PLATE ASSEMBLY

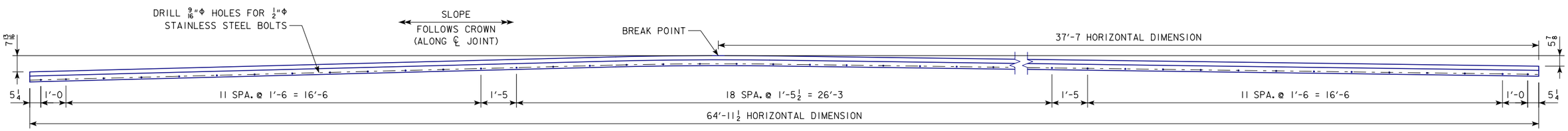

VIEW OF 5x1/4 BENT PL

(SEE DETAIL H ON DES. SH. 257 FOR DETAIL)

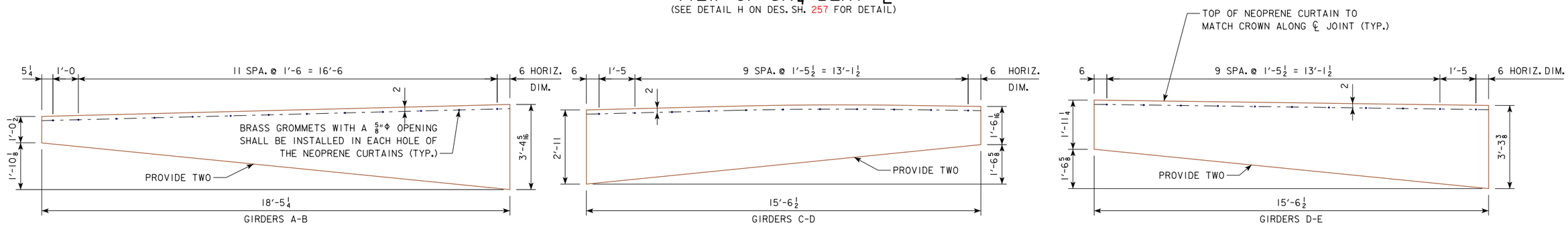

ELEVATION VIEW - REINFORCED NEOPRENE CURTAIN

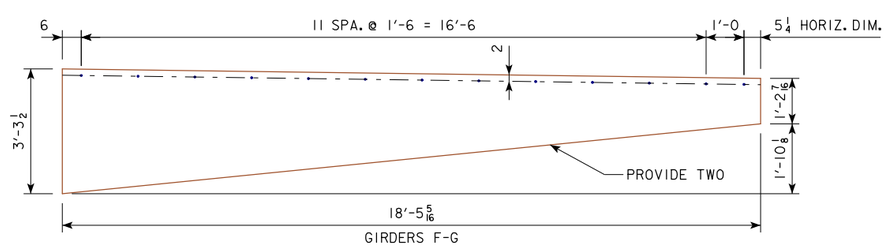

ELEVATION VIEW - REINFORCED NEOPRENE CURTAIN

NOTES:

THE CONTRACTOR HAS THE OPTION OF CUTTING THE EXPANSION PL AT THE BREAK POINT TO ACCOUNT FOR THE CROSS SLOPE TRANSITION. A 1/2" GROOVE WELD SHALL BE USED ALL AROUND THE EXPANSION PL AND A 1/4" GROOVE WELD SHALL BE USED ALL AROUND THE 1/2" BENT PL TO CONNECT THE PLS TOGETHER. ALL SURFACES NOT IN CONTACT WITH CONCRETE ARE TO BE GROUND FLUSH.

ALL VIEWS LOOKING DOWNSTATION NORMAL TO ℄ JOINT.

SEE DESIGN SHEET 250 FOR REINFORCED NEOPRENE NOTES.

whks
engineers + planners + land surveyors

DESIGN FOR VARIABLE SKEW (L.A.)

2271'-6 x VARI. CONTINUOUS WELDED GIRDER BRIDGE-EBL W/14' BIKE TRAIL

138'-10 & 151'-0 7/8 END SPANS MULTIPLE LENGTH INTERIOR SPANS

JT. DRAINAGE DTLS. - EB JT. 32

STA. 6792+60.93 - 52' LEFT ℄ I-74 OCTOBER, 2015

SCOTT COUNTY

IOWA DEPARTMENT OF TRANSPORTATION - HIGHWAY DIVISION

DESIGN SHEET NO. 260 OF 282 FILE NO. 30253 DESIGN NO. 3408

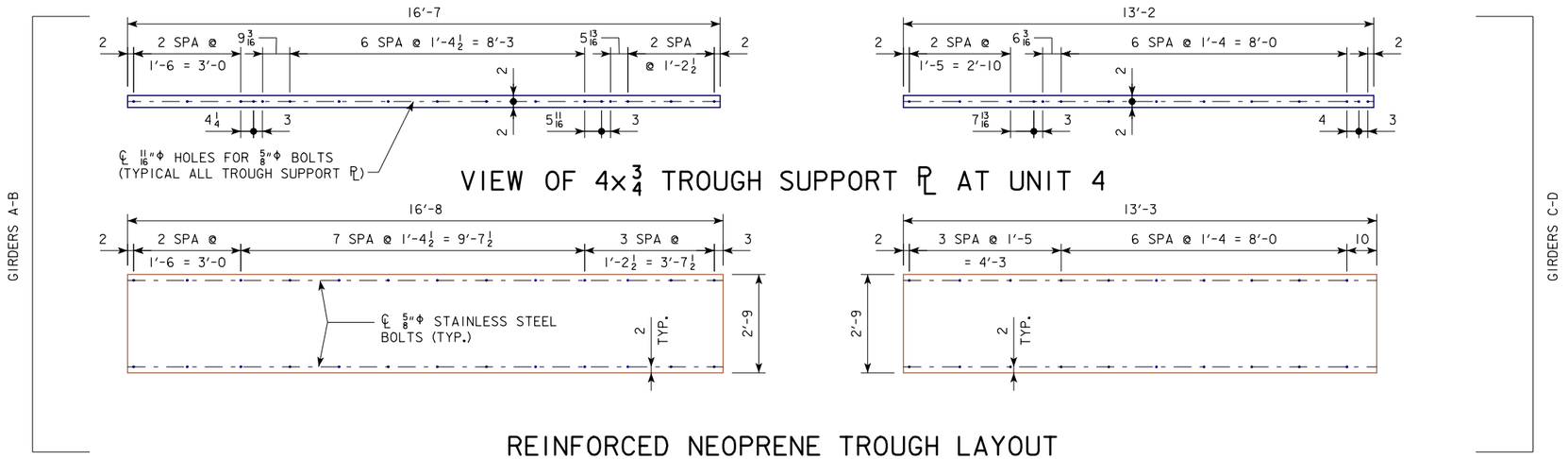

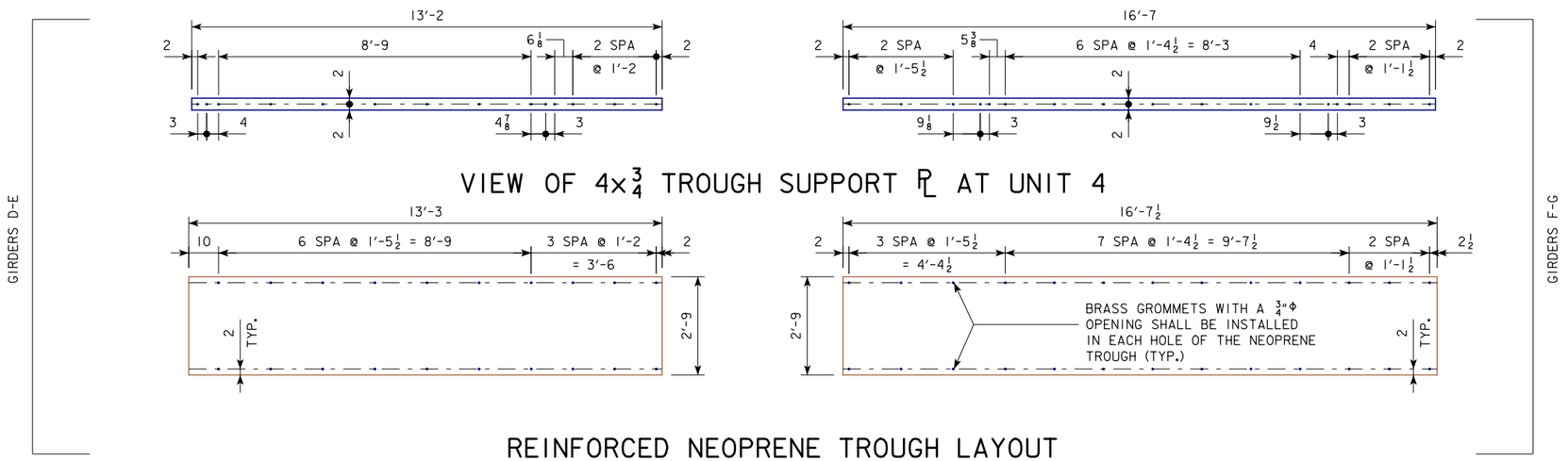

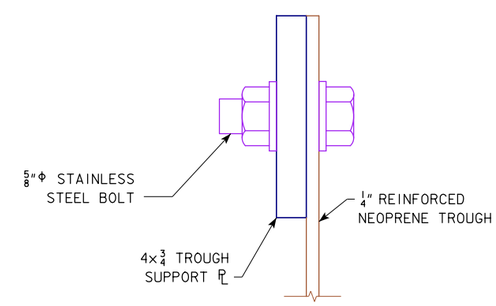

REINFORCED NEOPRENE TROUGH CONNECTION DETAIL

NOTE:

SEE DESIGN SHEET 250 FOR REINFORCED NEOPRENE NOTES.

whks
engineers + planners + land surveyors

DESIGN FOR VARIABLE SKEW (L.A.)

2271'-6 x VARI. CONTINUOUS WELDED GIRDER BRIDGE-EBL W/14' BIKE TRAIL

138'-10 & 151'-0 7/8 END SPANS MULTIPLE LENGTH INTERIOR SPANS

JT. DRAINAGE DTLS. - EB JT. 32

STA. 6792+60.93 - 52' LEFT ℄ I-74 OCTOBER, 2015

SCOTT COUNTY

IOWA DEPARTMENT OF TRANSPORTATION - HIGHWAY DIVISION

DESIGN SHEET NO. 261 OF 282 FILE NO. 30253 DESIGN NO. 3408

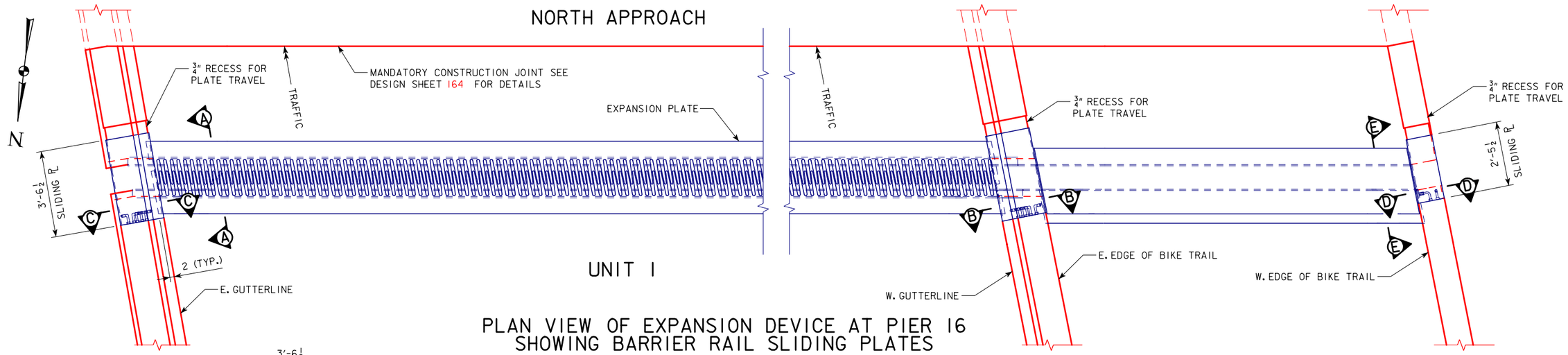

PLAN VIEW OF EXPANSION DEVICE AT PIER 16 SHOWING BARRIER RAIL SLIDING PLATES

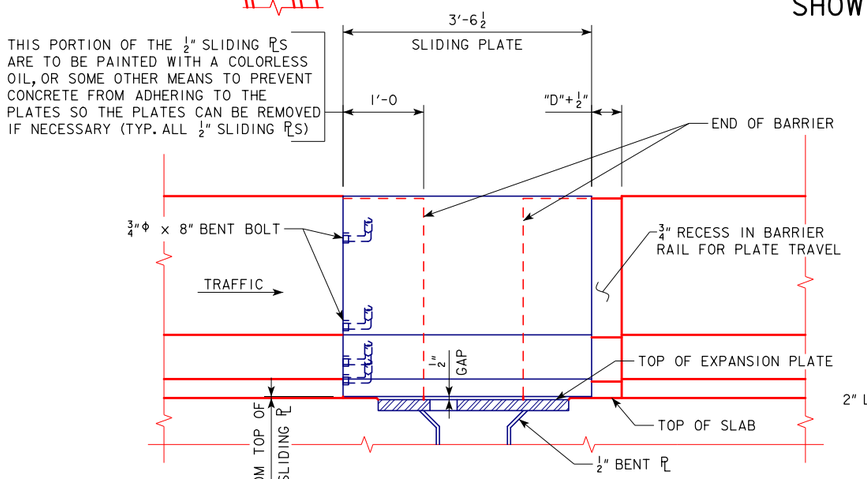

SECTION A-A

END OF BARRIER TO LINE UP WITH FRONT FACE OF 1/2" BENT PL AS SHOWN

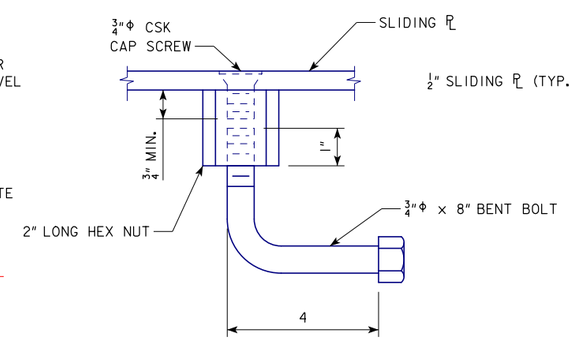

BENT BOLT DETAIL

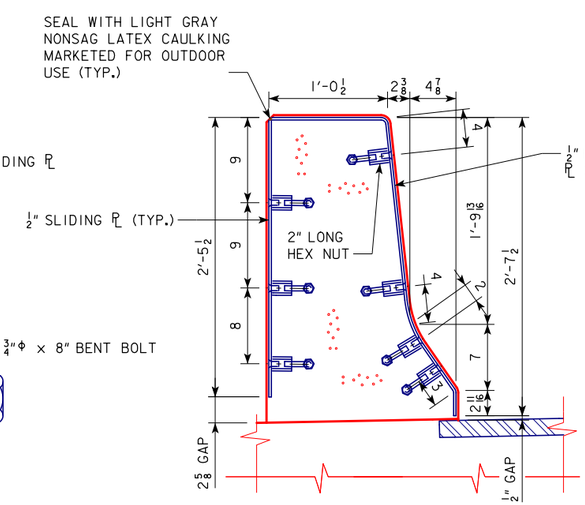

SECTION B-B

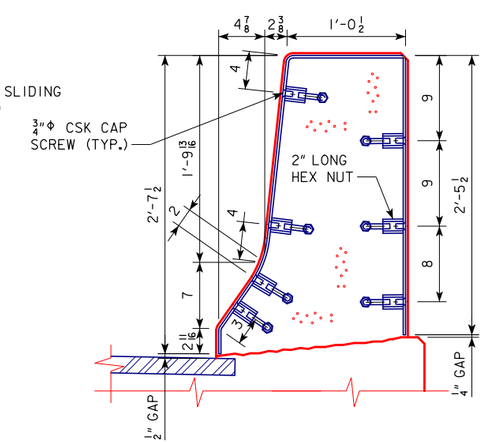

SECTION C-C

DEPRESS 1/2" SLIDING PLS 1/4" BELOW THE FACE OF BARRIER

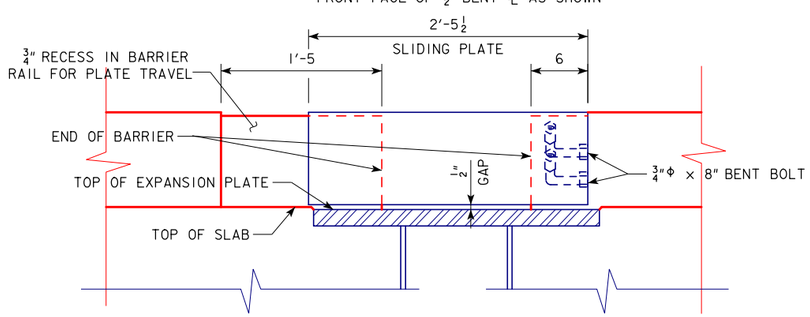

SECTION E-E

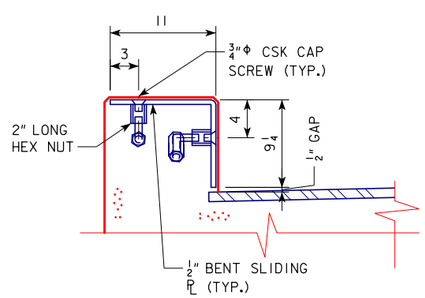

SECTION D-D

DEPRESS 1/2" SLIDING PL 1/4" BELOW THE FACE OF CURB

NOTES:
SEE BARRIER RAIL DETAILS SHEETS FOR BARRIER RAIL REINFORCING.

FOR FINGER JOINT & SLIDING PLATE NOTES SEE DES. SH. 263.

STEEL TRAFFIC RAILING NOT SHOWN FOR CLARITY.

SEE TABLE ON DES. SH. 231 FOR DIMENSION "D".

whks
engineers + planners + land surveyors

DESIGN FOR VARIABLE SKEW (L.A.)

2271'-6 x VARI. CONTINUOUS WELDED GIRDER BRIDGE-EBL W/14' BIKE TRAIL

138'-10 & 151'-0 7/8 END SPANS MULTIPLE LENGTH INTERIOR SPANS

FINGER JOINT DTLS. - EB JT. 16

STA. 6792+60.93 - 52' LEFT ℄ I-74 OCTOBER, 2015

SCOTT COUNTY

IOWA DEPARTMENT OF TRANSPORTATION - HIGHWAY DIVISION

DESIGN SHEET NO. 262 OF 282 FILE NO. 30253 DESIGN NO. 3408

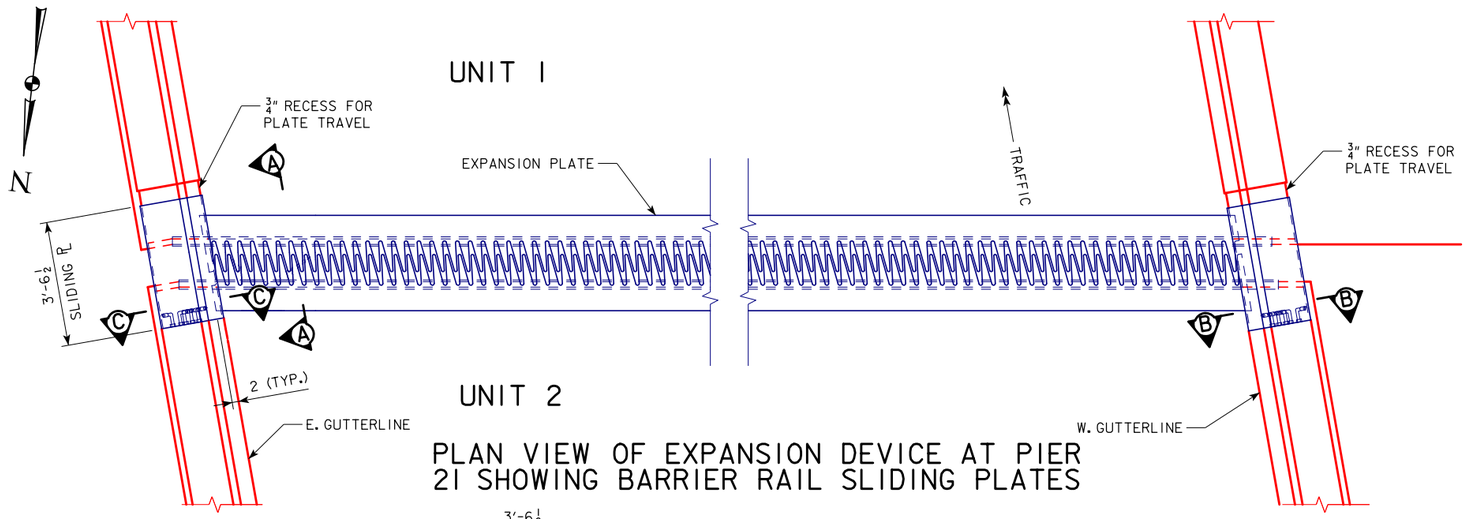

PLAN VIEW OF EXPANSION DEVICE AT PIER 21 SHOWING BARRIER RAIL SLIDING PLATES

FINGER JOINT AND SLIDING PL NOTES:

THE CONTRACTOR SHALL SUBMIT FOR REVIEW SHOP DRAWINGS OF THE FINGER JOINT SYSTEM SHOWING LAYOUT, MATERIAL TO BE USED, AND PROVISIONS FOR HOLDING THE JOINT DURING PLACEMENT OF CONCRETE.

HAND PACKING OF CONCRETE IS REQUIRED UNDER THE FINGER JOINT EXPANSION PL.

THE EXPANSION DEVICE SHALL BE GALVANIZED AFTER WELDING, INCLUDING THE SHIMS, BOLTS, WASHERS AND NUTS.

THE EXPANSION DEVICE IS TO BE PARALLEL TO GRADE.

SEE "ESTIMATE REFERENCE INFORMATION" ON DES. SH. 1 FOR PRICE BID INFORMATION.

THE MATERIAL USED FOR THE FINGER JOINT PLATES AND BIKE TRAIL EXPANSION PLATES IS TO BE ASTM A572, GRADE 50 STEEL. ALL OTHER STRUCTURAL STEEL IS TO BE ASTM A 709/A 709M GRADE 36 STEEL. THE 1/2"Φ BOLTS AND WASHERS ATTACHING THE NEOPRENE CURTAIN TO THE 5x1/4 BENT PLATE AND THE 5/8"Φ BOLTS, NUTS AND WASHERS ATTACHING THE NEOPRENE TROUGHS TO THE 4x3/4 TROUGH HANGER PL ARE TO BE STAINLESS STEEL. ALL OTHER BOLTS SHALL MEET THE REQUIREMENTS OF ASTM A-307. THE PLATES, BOLTS, NUTS AND CAP SCREWS ARE TO BE GALVINIZED IN ACCORDANCE WITH ARTICLE 4100.07 OF THE STANDARD SPECIFICATIONS UNLESS OTHERWISE NOTED.

THE PRICE BID FOR THE BARRIER RAIL SLIDING PLATES IS INCLUDED IN THE QUANTITY FOR 'EXPANSION JOINT (FINGER PLATE TYPE)'.

CONTRACTOR TO NOTE THAT THE CAP SCREW ANCHORAGE SYSTEM FOR THE 1/2" BARRIER PLATES ARE ALWAYS TO BE PLACED ON THE ON COMING TRAFFIC SIDE.

CAP SCREWS SHALL BE COUNTERSUNK 1/16" BELOW TOP OF THE PLATE.

IT IS INTENDED THAT THE 3/4" RECESSED AREA BE FORMED SO THAT WHEN THE 1/2" PLATE IS INSTALLED, THE PLATE WILL BE ABLE TO MOVE FREELY IN THIS RECESSED AREA.

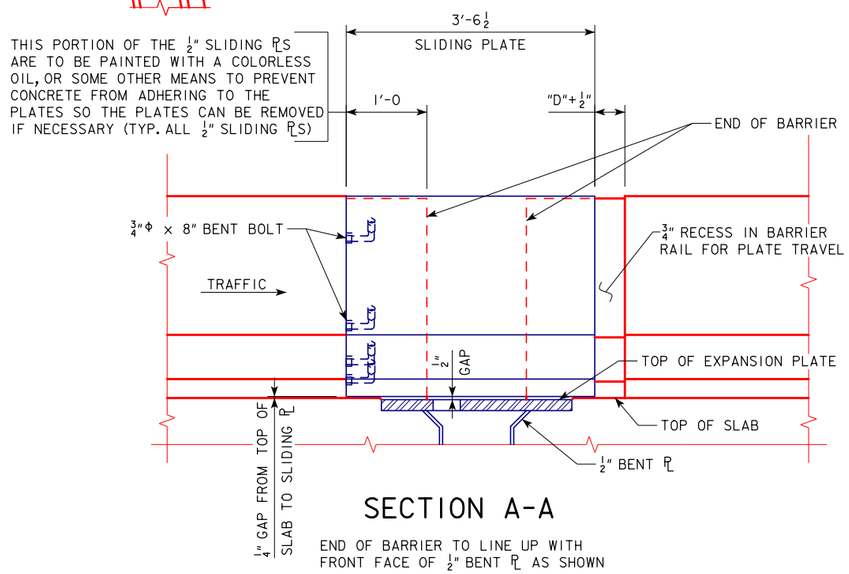

SECTION A-A

END OF BARRIER TO LINE UP WITH FRONT FACE OF 1/2" BENT PL AS SHOWN

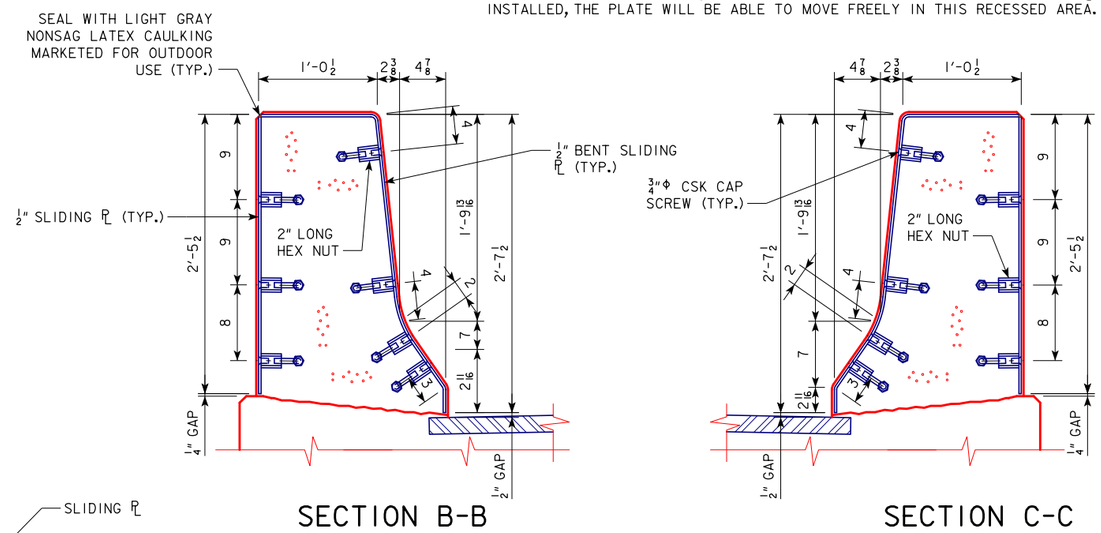

SECTION B-B

SECTION C-C

DEPRESS 1/2" SLIDING PLS 1/4" BELOW THE FACE OF BARRIER

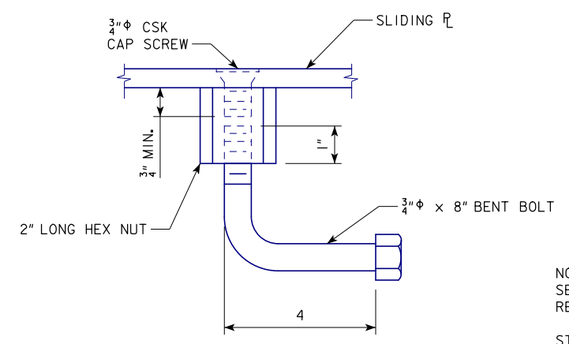

BENT BOLT DETAIL

NOTES:
SEE BARRIER RAIL DETAILS SHEETS FOR BARRIER RAIL REINFORCING.

STEEL TRAFFIC RAILING NOT SHOWN FOR CLARITY.

SEE TABLE ON DES. SH. 237 FOR DIMENSION "D".

whks
engineers + planners + land surveyors

DESIGN FOR VARIABLE SKEW (L.A.)

227'-6 x VARI. CONTINUOUS WELDED GIRDER BRIDGE-EBL W/14' BIKE TRAIL

138'-10 & 151'-0 7/8 END SPANS MULTIPLE LENGTH INTERIOR SPANS

FINGER JOINT DTLS. - EB JT. 21

STA. 6792+60.93 - 52' LEFT ℄ I-74 OCTOBER, 2015

SCOTT COUNTY

IOWA DEPARTMENT OF TRANSPORTATION - HIGHWAY DIVISION

DESIGN SHEET NO. 263 OF 282 FILE NO. 30253 DESIGN NO. 3408

DESIGN TEAM CF / BB / MG	SCOTT COUNTY	PROJECT NUMBER BRFIM-074-1(200)5--05-82	SHEET NUMBER 264

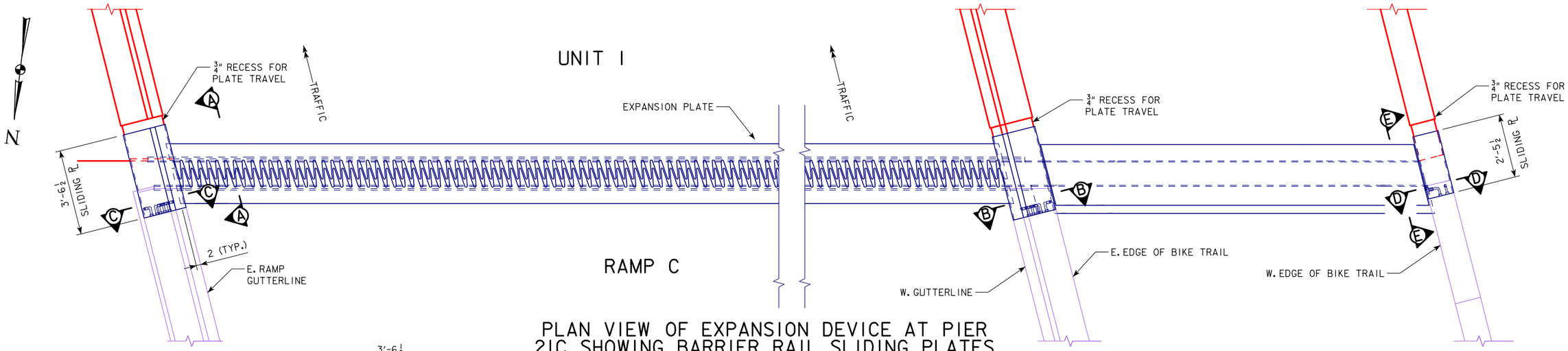

PLAN VIEW OF EXPANSION DEVICE AT PIER 21C SHOWING BARRIER RAIL SLIDING PLATES

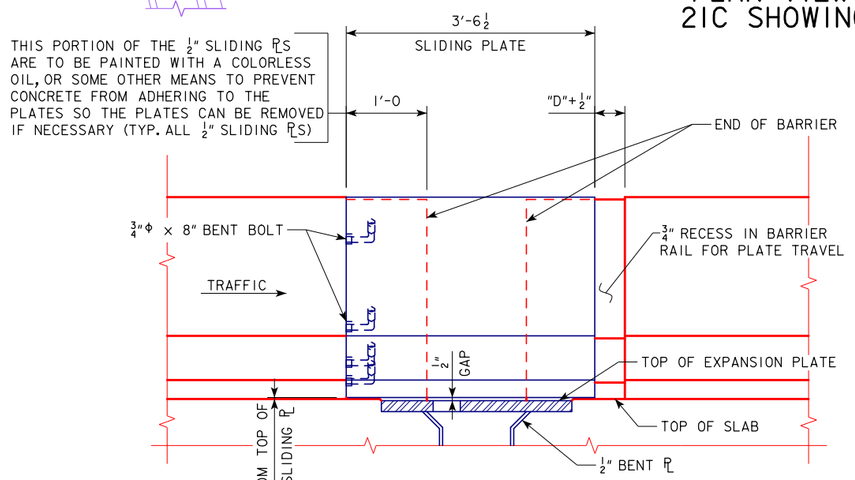

SECTION A-A

END OF BARRIER TO LINE UP WITH FRONT FACE OF 1/2" BENT PL AS SHOWN

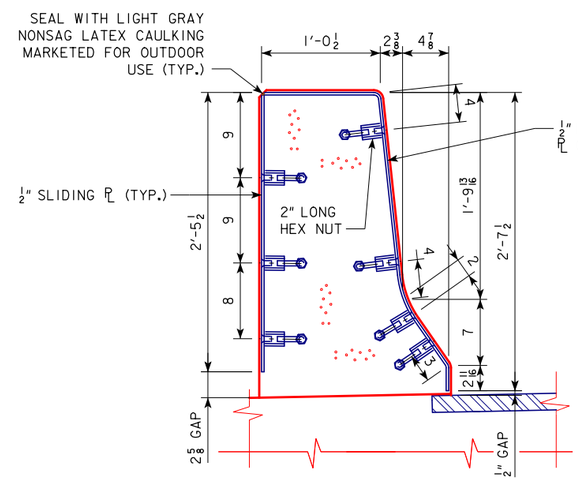

SECTION B-B

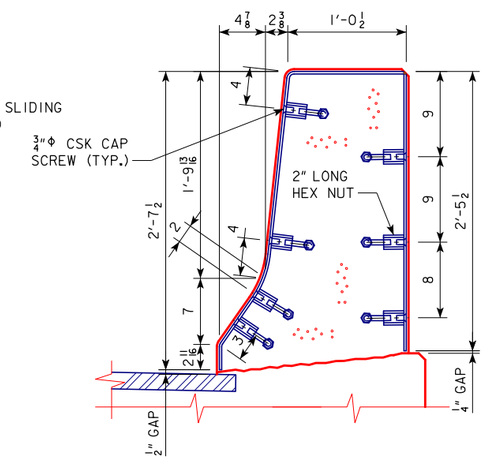

SECTION C-C

DEPRESS 1/2" SLIDING PLS 1/4" BELOW THE FACE OF BARRIER

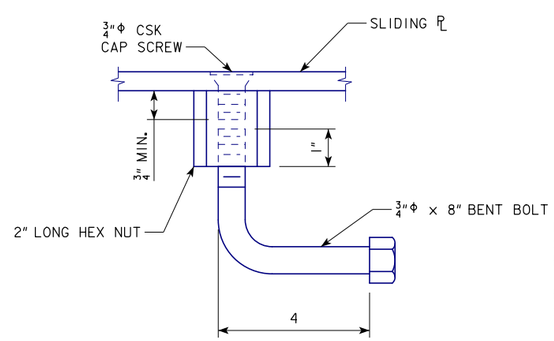

BENT BOLT DETAIL

NOTES:

SEE BARRIER RAIL DETAILS SHEETS FOR BARRIER RAIL REINFORCING.

FOR FINGER JOINT & SLIDING PLATE NOTES SEE DES. SH. 263.

STEEL TRAFFIC RAILING NOT SHOWN FOR CLARITY.

SEE TABLE ON DES. SH. 239 FOR DIMENSION "D".

SEE SESIGN SHEET 262 FOR SECTION D-D AND E-E.

whks
engineers + planners + land surveyors

DESIGN FOR VARIABLE SKEW (L.A.)

2271'-6 x VARI. CONTINUOUS WELDED GIRDER BRIDGE-EBL W/14' BIKE TRAIL

138'-10 & 151'-0 7/8 END SPANS MULTIPLE LENGTH INTERIOR SPANS

FINGER JOINT DTLS. - EB JT. 21C

STA. 6792+60.93 - 52' LEFT ℄ I-74 OCTOBER, 2015

SCOTT COUNTY

IOWA DEPARTMENT OF TRANSPORTATION - HIGHWAY DIVISION

DESIGN SHEET NO. 264 OF 282 FILE NO. 30253 DESIGN NO. 3408

DESIGN TEAM CF / BB / MG	SCOTT COUNTY	PROJECT NUMBER BRFIM-074-1(200)5--05-82	SHEET NUMBER 265

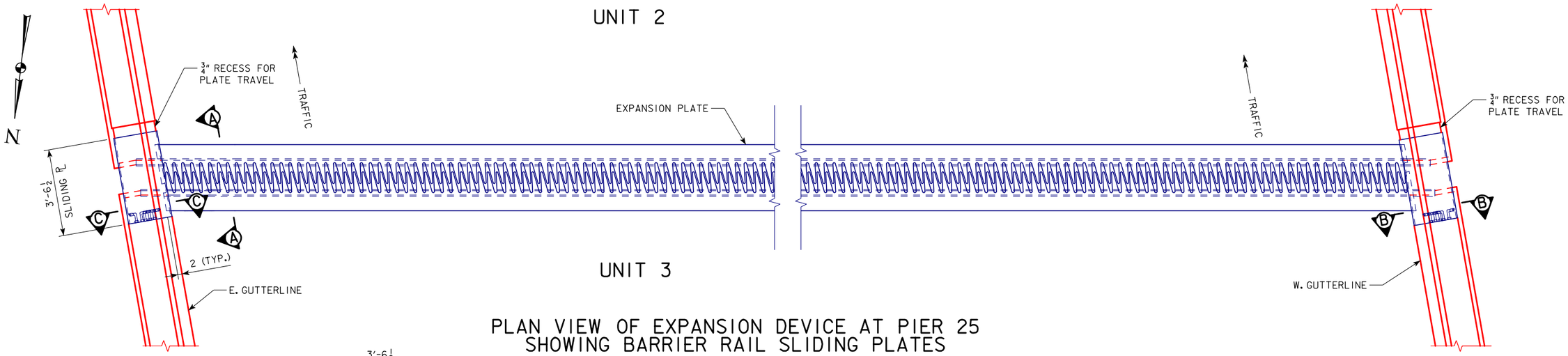

PLAN VIEW OF EXPANSION DEVICE AT PIER 25 SHOWING BARRIER RAIL SLIDING PLATES

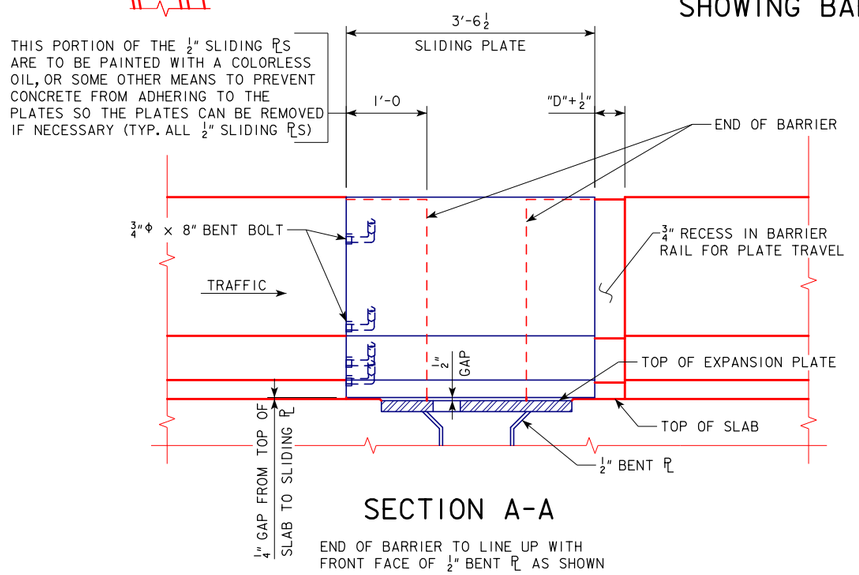

SECTION A-A

END OF BARRIER TO LINE UP WITH FRONT FACE OF 1/2" BENT PL AS SHOWN

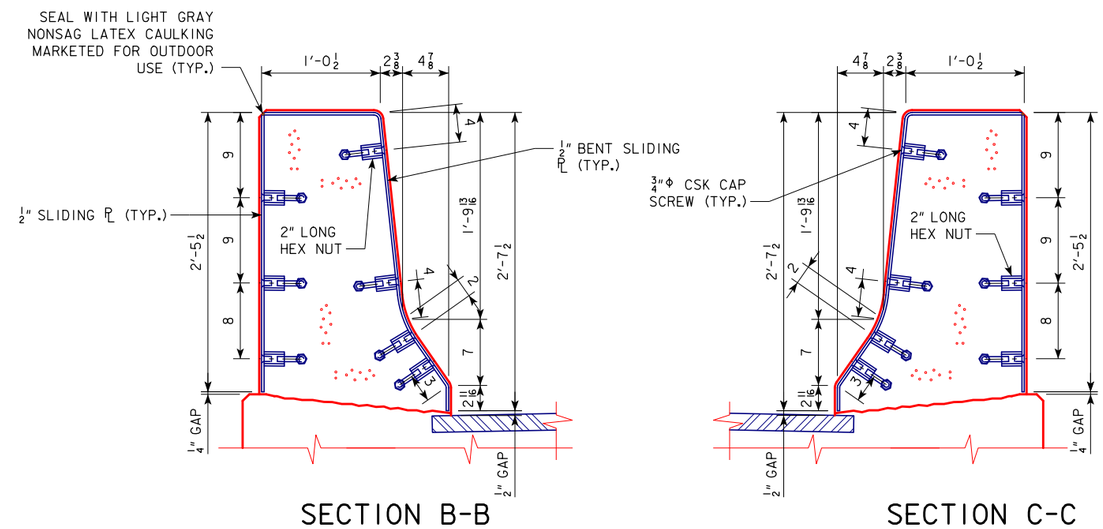

SECTION B-B

SECTION C-C

DEPRESS 1/2" SLIDING PLS 1/4" BELOW THE FACE OF BARRIER

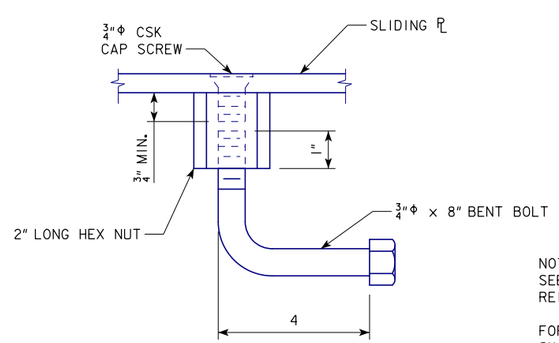

BENT BOLT DETAIL

NOTES:
SEE BARRIER RAIL DETAILS SHEETS FOR BARRIER RAIL REINFORCING.

FOR FINGER JOINT & SLIDING PLATE NOTES SEE DES. SH. 263.

STEEL TRAFFIC RAILING NOT SHOWN FOR CLARITY.

SEE TABLE ON DES. SH. 246 FOR DIMENSION "D".

whks
engineers + planners + land surveyors

DESIGN FOR VARIABLE SKEW (L.A.)

2271'-6 x VARI. CONTINUOUS WELDED GIRDER BRIDGE-EBL W/14' BIKE TRAIL

138'-10 & 151'-0 7/8 END SPANS MULTIPLE LENGTH INTERIOR SPANS

FINGER JOINT DTLS. - EB JT. 25

STA. 6792+60.93 - 52' LEFT ℄ I-74 OCTOBER, 2015

SCOTT COUNTY

IOWA DEPARTMENT OF TRANSPORTATION - HIGHWAY DIVISION

DESIGN SHEET NO. 265 OF 282 FILE NO. 30253 DESIGN NO. 3408

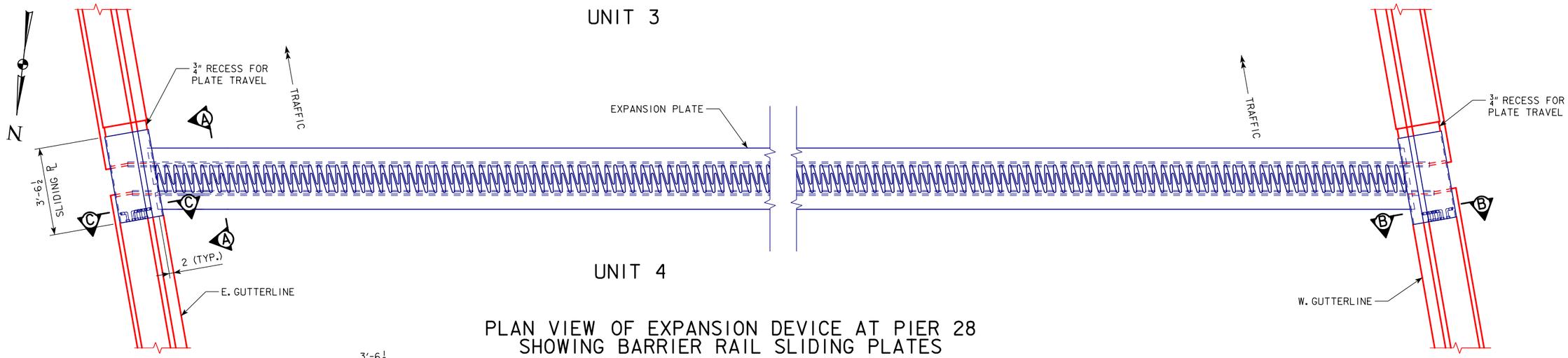

PLAN VIEW OF EXPANSION DEVICE AT PIER 28 SHOWING BARRIER RAIL SLIDING PLATES

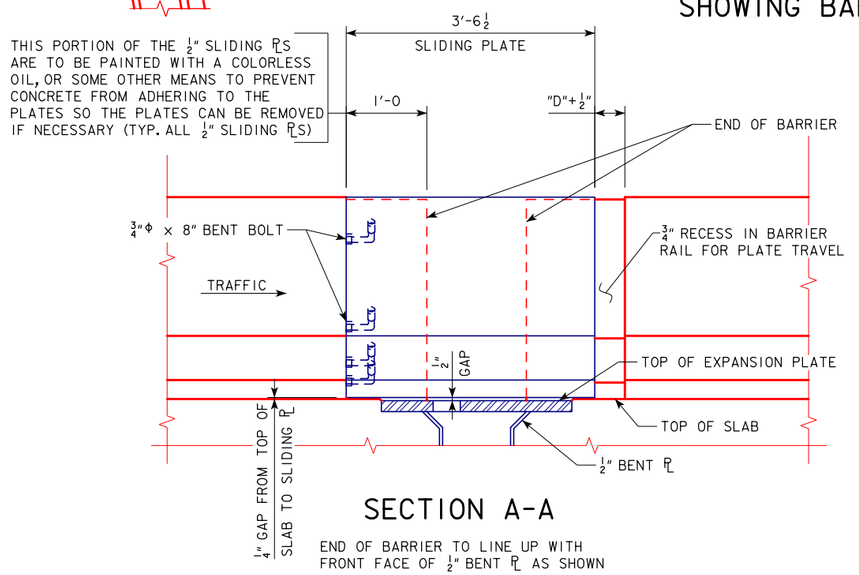

SECTION A-A

END OF BARRIER TO LINE UP WITH FRONT FACE OF 1/2" BENT PL AS SHOWN

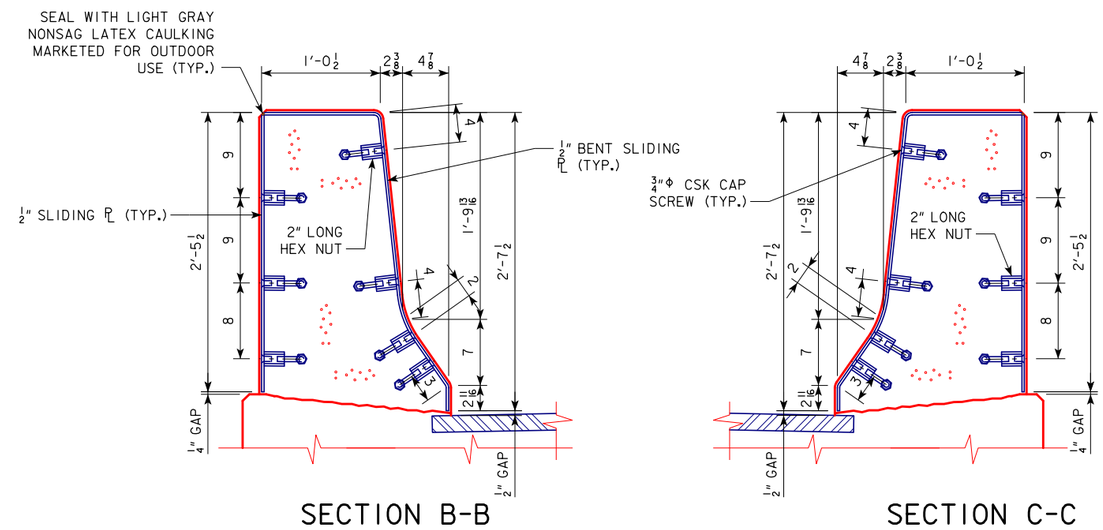

SECTION B-B

SECTION C-C

DEPRESS 1/2" SLIDING PLS 1/4" BELOW THE FACE OF BARRIER

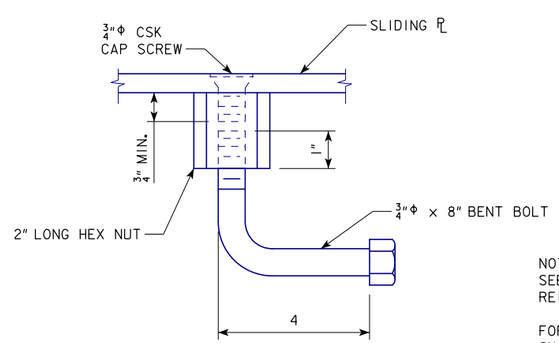

BENT BOLT DETAIL

NOTES:
SEE BARRIER RAIL DETAILS SHEETS FOR BARRIER RAIL REINFORCING.

FOR FINGER JOINT & SLIDING PLATE NOTES SEE DES. SH. 263.

STEEL TRAFFIC RAILING NOT SHOWN FOR CLARITY.

SEE TABLE ON DES. SH. 251 FOR DIMENSION "D".

whks
engineers + planners + land surveyors

DESIGN FOR VARIABLE SKEW (L.A.)

2271'-6 x VARI. CONTINUOUS WELDED GIRDER BRIDGE-EBL W/14' BIKE TRAIL

138'-10 & 151'-0 7/8 END SPANS MULTIPLE LENGTH INTERIOR SPANS

FINGER JOINT DTLS. - EB JT. 28

STA. 6792+60.93 - 52' LEFT ℄ I-74 OCTOBER, 2015

SCOTT COUNTY

IOWA DEPARTMENT OF TRANSPORTATION - HIGHWAY DIVISION

DESIGN SHEET NO. 266 OF 282 FILE NO. 30253 DESIGN NO. 3408

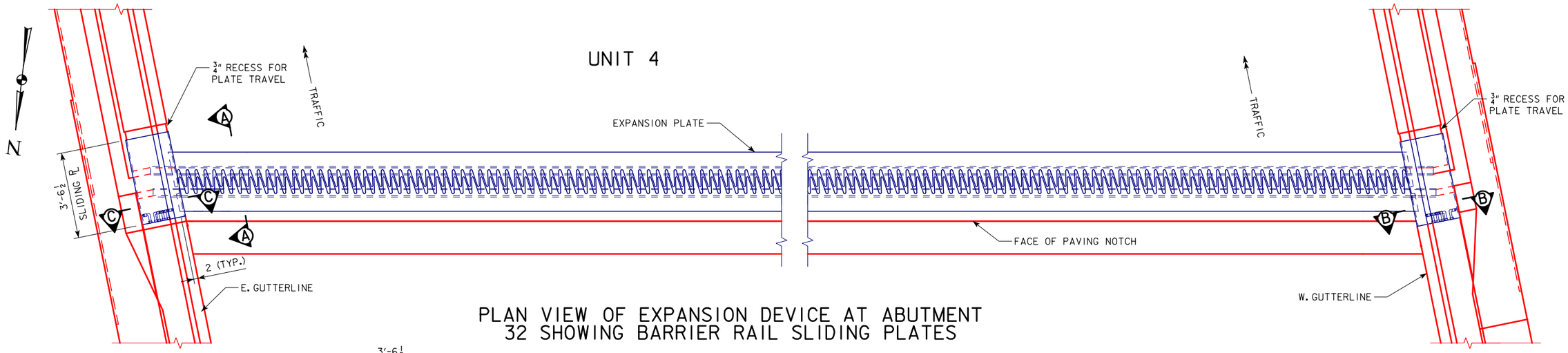

PLAN VIEW OF EXPANSION DEVICE AT ABUTMENT 32 SHOWING BARRIER RAIL SLIDING PLATES

THIS PORTION OF THE 1/2" SLIDING ℞S ARE TO BE PAINTED WITH A COLORLESS OIL, OR SOME OTHER MEANS TO PREVENT CONCRETE FROM ADHERING TO THE PLATES SO THE PLATES CAN BE REMOVED IF NECESSARY (TYP. ALL 1/2" SLIDING ℞S)

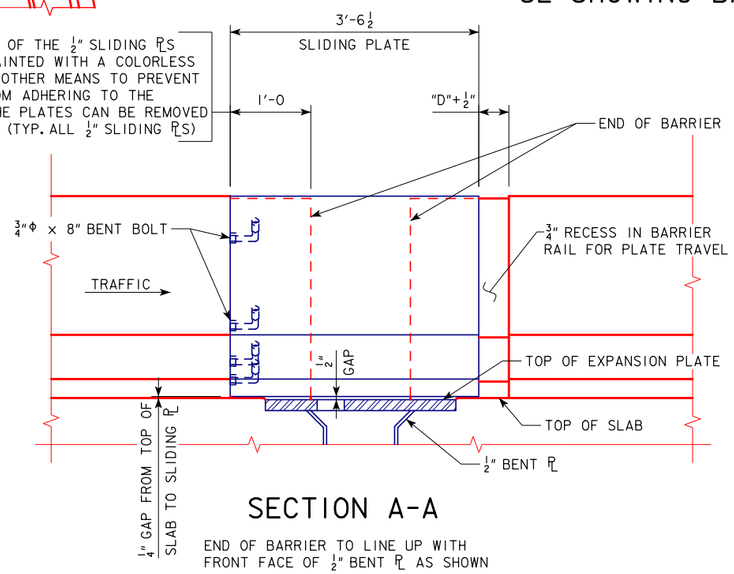

SECTION A-A

END OF BARRIER TO LINE UP WITH FRONT FACE OF 1/2" BENT ℞ AS SHOWN

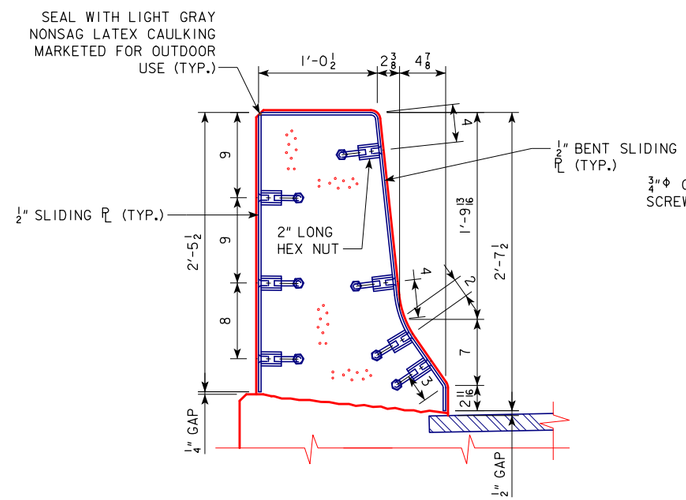

SECTION B-B

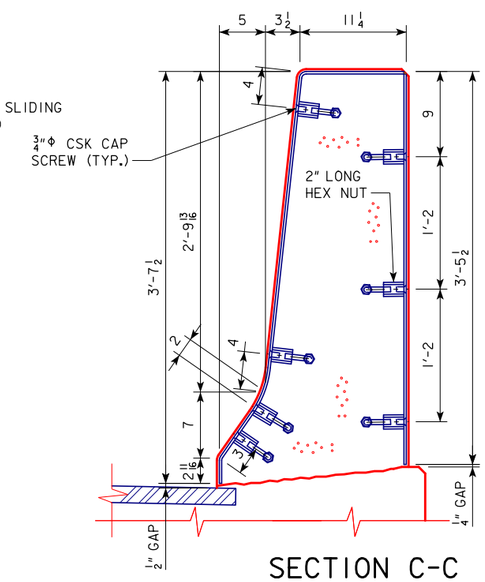

SECTION C-C

MASKWALL NOT SHOWN FOR CLARITY

DEPRESS 1/2" SLIDING ℞S 1/4" BELOW THE FACE OF BARRIER

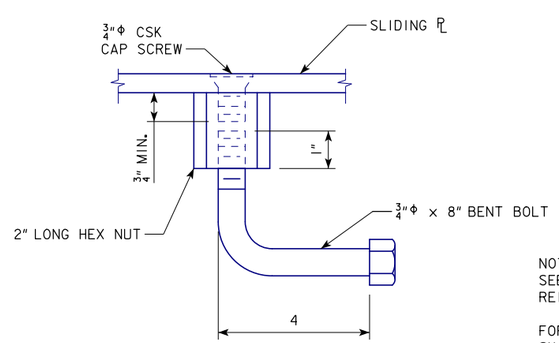

BENT BOLT DETAIL

NOTES:
SEE BARRIER RAIL DETAILS SHEETS FOR BARRIER RAIL REINFORCING.

FOR FINGER JOINT & SLIDING PLATE NOTES SEE DES. SH. 263.

STEEL TRAFFIC RAILING NOT SHOWN FOR CLARITY.

SEE TABLE ON DES. SH. 256 FOR DIMENSION "D".

whks
engineers + planners + land surveyors

DESIGN FOR VARIABLE SKEW (L.A.)

2271'-6 x VARI. CONTINUOUS WELDED GIRDER BRIDGE-EBL W/14' BIKE TRAIL

138'-10 & 151'-0 7/8 END SPANS MULTIPLE LENGTH INTERIOR SPANS

FINGER JOINT DTLS. - EB JT. 32

STA. 6792+60.93 - 52' LEFT ℄ I-74 OCTOBER, 2015

SCOTT COUNTY

IOWA DEPARTMENT OF TRANSPORTATION - HIGHWAY DIVISION

DESIGN SHEET NO. 267 OF 282 FILE NO. 30253 DESIGN NO. 3408

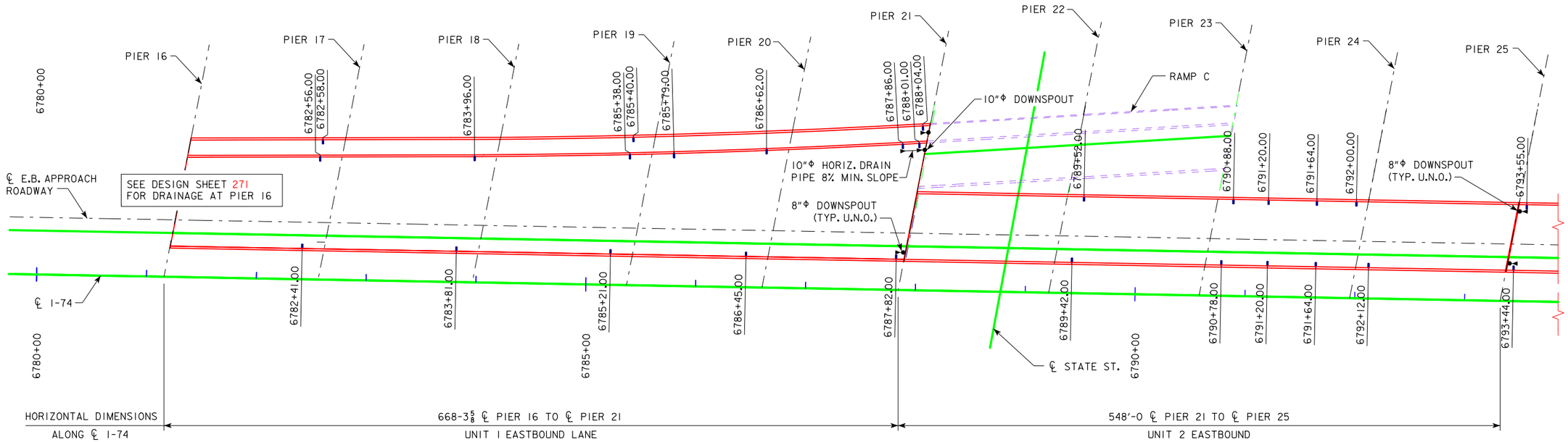

DRAIN LAYOUT - UNITS 1 & 2

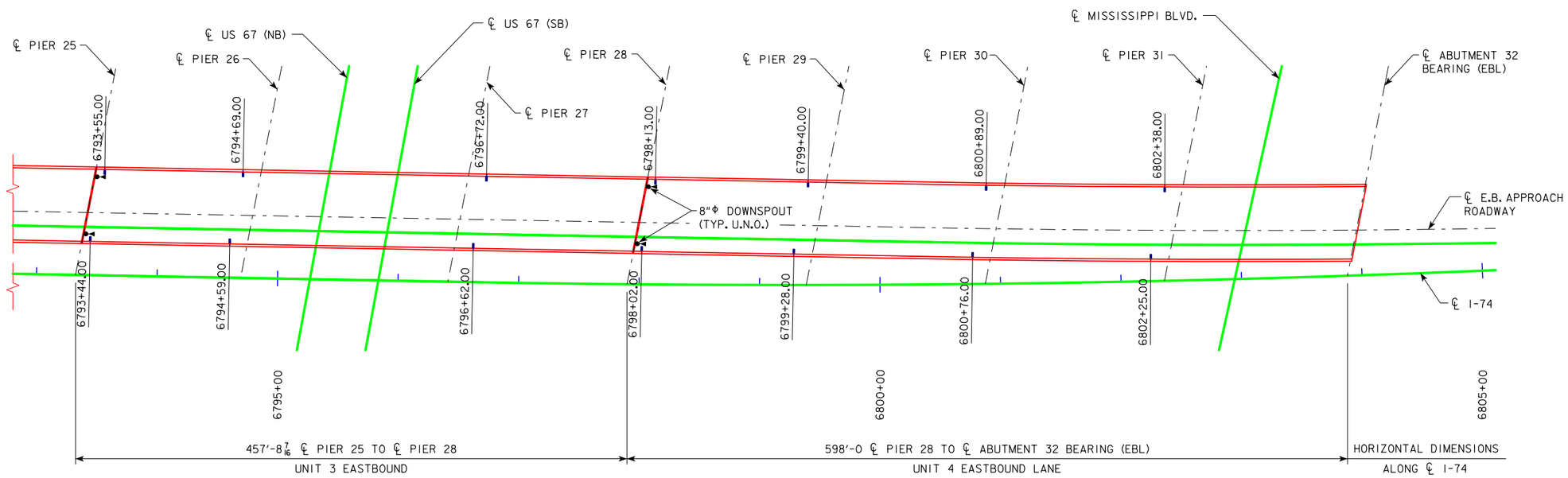

DRAIN LAYOUT - UNITS 3 & 4

whks
engineers + planners + land surveyors

N

NOTE:
SEE DESIGN SHEETS 269 & 270 FOR DRAIN DETAILS.

DESIGN FOR VARIABLE SKEW (L.A.)

2271'-6 x VARI. CONTINUOUS WELDED GIRDER BRIDGE-EBL W/14' BIKE TRAIL

138'-10 & 151'-0 7/8 END SPANS MULTIPLE LENGTH INTERIOR SPANS

DECK DRAIN LAYOUT

STA. 6792+60.93 - 52' LEFT ℄ I-74 OCTOBER, 2015

SCOTT COUNTY

IOWA DEPARTMENT OF TRANSPORTATION - HIGHWAY DIVISION

DESIGN SHEET NO. 268 OF 282 FILE NO. 30253 DESIGN NO. 3408

DESIGN TEAM CF / LG / JP	SCOTT COUNTY	PROJECT NUMBER BRFIM-074-1(200)5--05-82	SHEET NUMBER 269

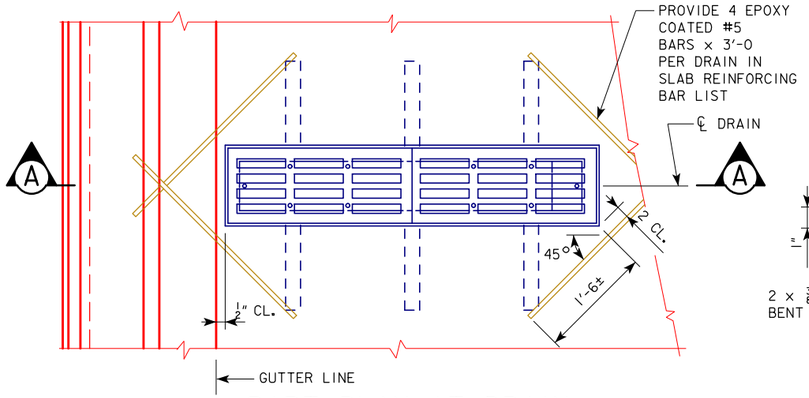

PART PLAN AT DRAIN

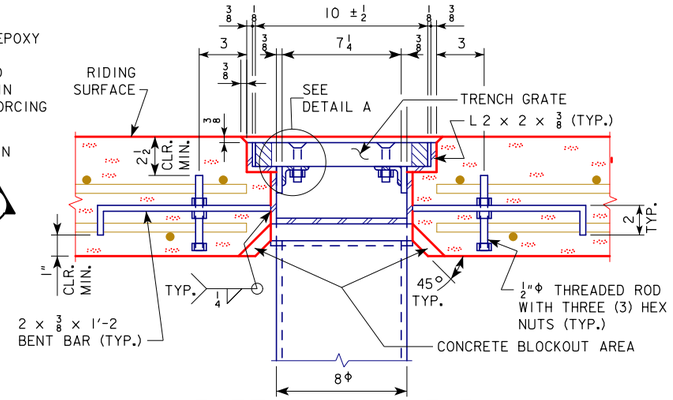

PART SECTION B-B

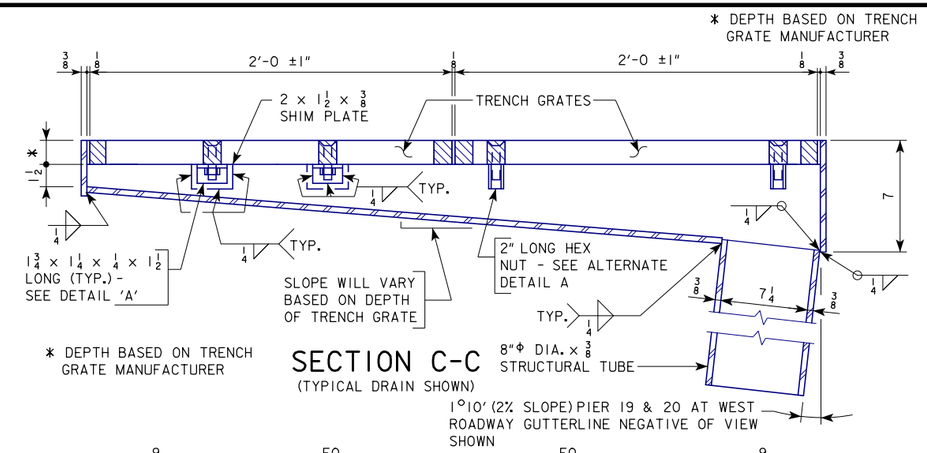

SECTION C-C

(TYPICAL DRAIN SHOWN)

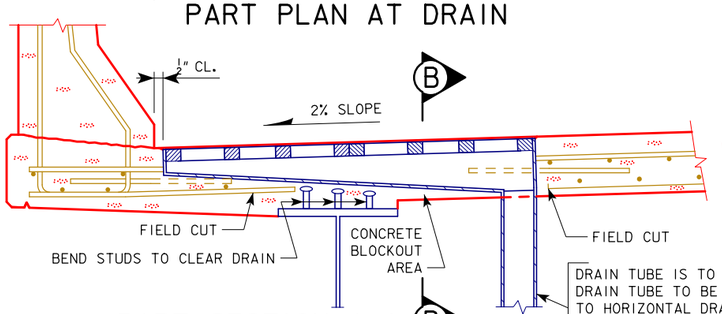

PART SECTION A-A

NOTE: 35 DRAINS REQUIRED.

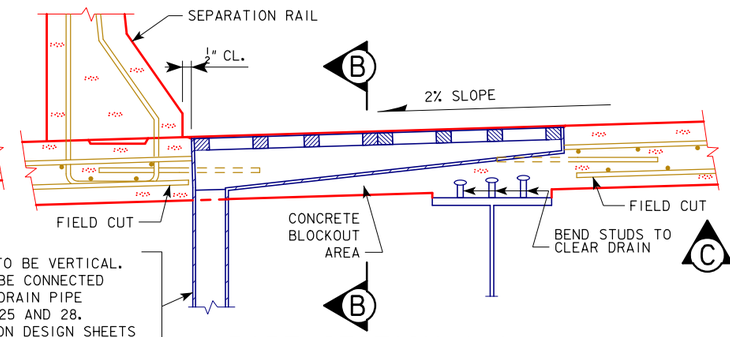

PART SECTION A-A

AT PIER 19 & 20 WEST ROADWAY GUTTERLINE

NOTE: 3 DRAINS REQUIRED.

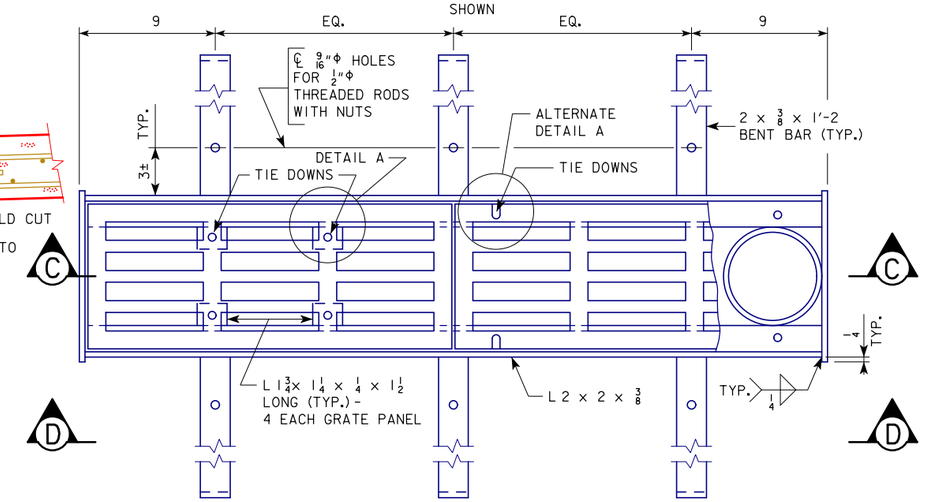

PLAN VIEW OF DRAIN TRENCH

(GRATE TIE DOWNS SHOW BOTH DETAIL A AND ALTERNATE DETAIL A)

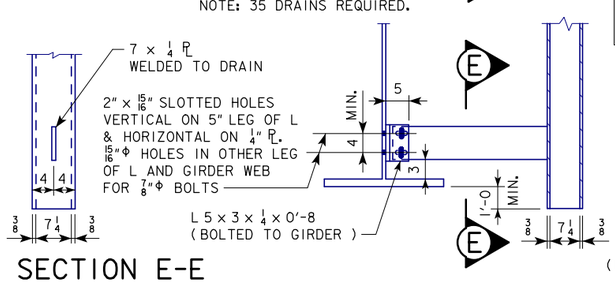

SECTION E-E

DETAILS AT DRAINS NOT CONNECTED TO PIPING

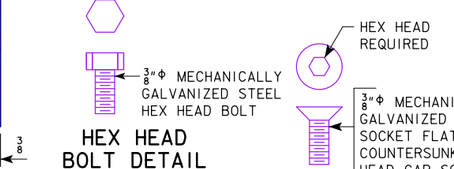

HEX HEAD BOLT DETAIL

(USED FOR ALTERNATE DETAIL A)

SOCKET FLAT COUNTERSUNK HEAD CAP SCREW DETAIL

MATERIALS

PLATES, BARS, THREADED RODS AND ANGLES SHALL MEET THE REQUIREMENTS ASTM A709 GRADE 36. THE TUBE STEEL SHALL MEET THE REQUIREMENTS ASTM A500 GRADE B.

3/8"Φ MECHANICALLY GALVANIZED STEEL SOCKET FLAT COUNTERSUNK HEAD CAP SCREW SHALL MEET THE REQUIREMENTS OF ASTM F879-91.

3/8"Φ MECHANICALLY GALVANIZED STEEL HEX HEAD BOLT SHALL MEET THE REQUIREMENTS OF IM 453.07.

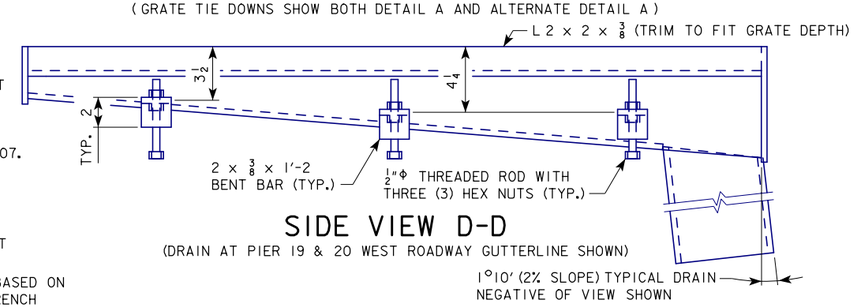

SIDE VIEW D-D

(DRAIN AT PIER 19 & 20 WEST ROADWAY GUTTERLINE SHOWN)

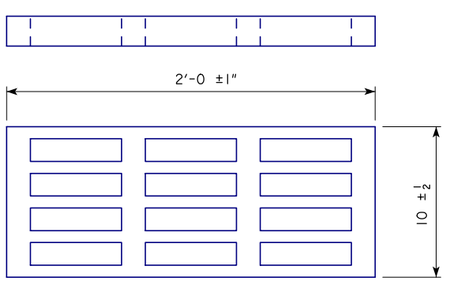

DRAIN TRENCH GRATE DETAILS

(2 GRATES REQUIRED PER DRAIN)

NOTE: PATTERN AND DIRECTION OF GRATE OPENINGS SHALL BE SIMILAR TO THE PATTERN SHOWN.

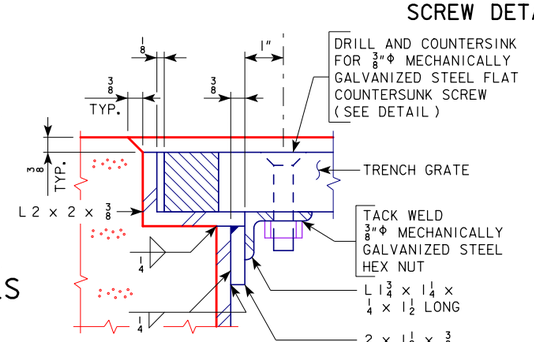

DETAIL A

(4 MOUNTING ANGLES PER GRATE PANEL)

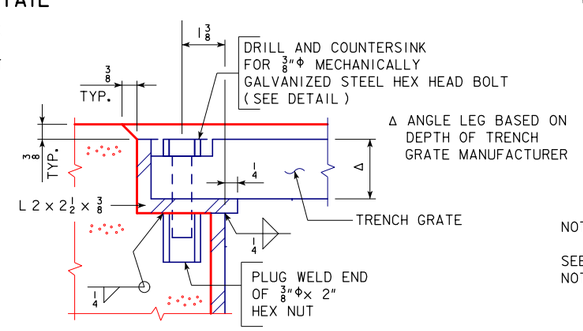

ALTERNATE DETAIL A

(4 PER GRATE PANEL)

NOTE:

SEE DESIGN SHEET 270 FOR DRAIN NOTES.

DESIGN FOR VARIABLE SKEW (L.A.)

227'-6 x VARI. CONTINUOUS WELDED GIRDER BRIDGE-EBL W/14' BIKE TRAIL

138'-10 & 151'-0 7/8 END SPANS MULTIPLE LENGTH INTERIOR SPANS

DECK DRAIN DETAILS

STA. 6792+60.93 - 52' LEFT ℄ I-74 OCTOBER, 2015

SCOTT COUNTY

IOWA DEPARTMENT OF TRANSPORTATION - HIGHWAY DIVISION

DESIGN SHEET NO. 269 OF 282 FILE NO. 30253 DESIGN NO. 3408

DESIGN TEAM CF / LG / JP	DRAIN DETAILS	STANDARD SHEET 1054 (MODIFIED)	SCOTT COUNTY	PROJECT NUMBER BRFIM-074-1(200)5--05-82	SHEET NUMBER 270

REVISED 07-11 - CHANGED THE TRENCH GATE AASHTO LOADING FROM HS20 TO HL-93. CHANGED DRAIN PIPE TO ROUND TUBE WITH SQUARE TUBE OPTION. GRATE HOLD DOWN BOLTS CHANGED TO 3/8" SIZE.
ENGLISH\MISCELLANEOUS\BRIDGES.DGN 1054 - THIS SHEET REDRAWN 11-00.

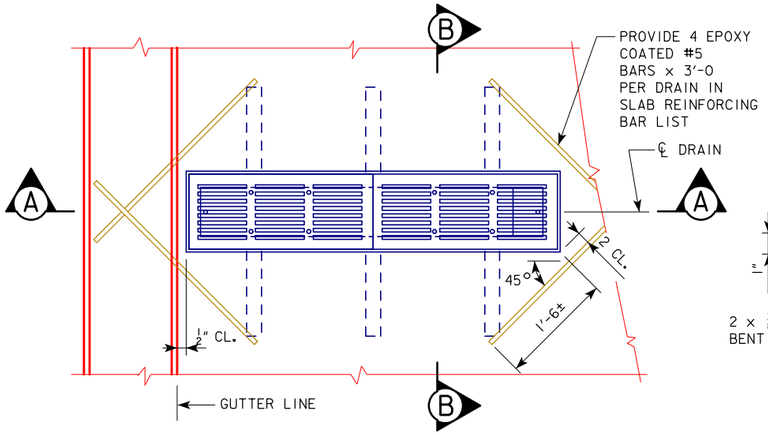

PART PLAN AT DRAIN

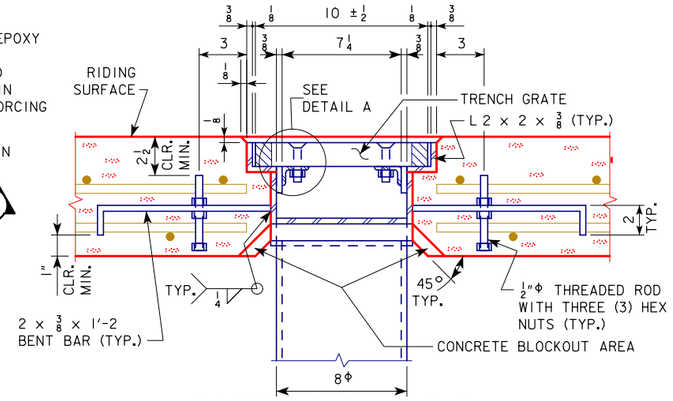

PART SECTION B-B

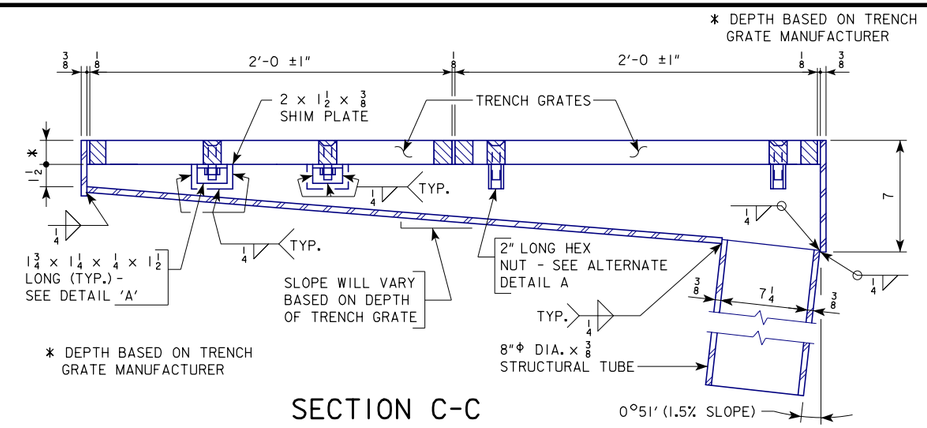

SECTION C-C

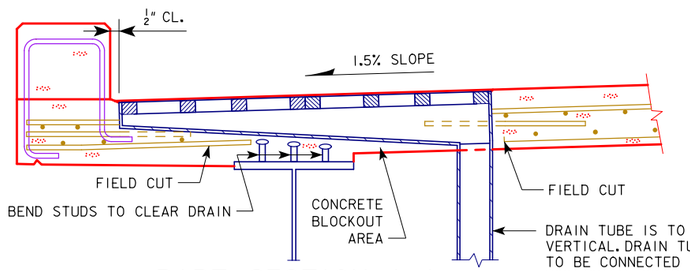

PART SECTION A-A

DRAIN TUBE IS TO BE VERTICAL. DRAIN TUBE TO BE CONNECTED TO HORIZONTAL DRAIN PIPE AT PIERS 16 AND 21. SEE END VIEWS ON DESIGN SHEETS 273 & 274 FOR TYPICAL CONNECTION DETAILS AT PIERS.

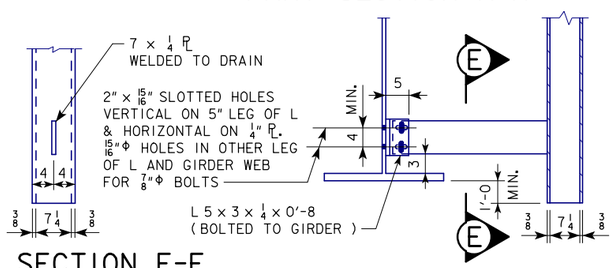

SECTION E-E

DETAILS AT DRAINS NOT CONNECTED TO PIPING

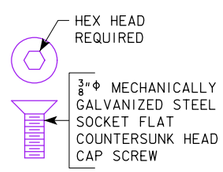

SOCKET FLAT COUNTERSUNK HEAD CAP SCREW DETAIL

DRAIN NOTES

THE DRAINS SHALL BE 3/8 INCH THICK STEEL. THE DRAIN ASSEMBLIES SHALL BE GALVANIZED AFTER FABRICATION. THE 8" DIA. x 3/8" STRUCTURAL DRAIN TUBE MAY BE SUBSTITUTED WITH A 8" x 8" x 3/8" STRUCTURAL DRAIN TUBE AT LOCATIONS WHERE THE DRAIN IS NOT CONNECTED TO PIPING. THE BID ITEM "BRIDGE DRAINAGE SYSTEM" SHALL INCLUDE ALL COSTS ASSOCIATED WITH FABRICATING AND INSTALLING THE DECK DRAINS AS PER PLAN.

THE DRAIN TRENCH GRATES SHALL BE FERROUS CASTINGS. METAL USED IN THE MANUFACTURE OF CASTINGS SHALL CONFORM TO ASTM A48-83 CLASS 35B OR BETTER GRAY IRON CASTINGS COMPLYING WITH CURRENT IOWA D.O.T. STANDARD SPECIFICATIONS. FINISH OF CASTINGS SHALL BE SMOOTH AND FREE OF DEFECTS. TRENCH GRATES SHALL BE CAPABLE OF CARRYING AASHTO HL-93 LOADING. GALVANIZING OF THE TRENCH GRATES IS NOT REQUIRED.

DRAINS SHALL BE CENTERED OVER THE NEAREST BOTTOM TRANSVERSE SLAB REINFORCING BAR FROM THE LOCATION DESIGNATED ON THE SITUATION PLAN. THE BOTTOM TRANSVERSE SLAB REINFORCING BAR SHALL BE CUT OFF TO PROVIDE 1 1/2 INCH CLEARANCE FROM THE DRAIN. THE TOP TRANSVERSE SLAB REINFORCING BARS ON EACH SIDE OF THE DRAIN, SHALL BE SPACED AS NECESSARY TO PROVIDE 1 1/2 INCH CLEARANCE FROM THE DRAIN. LONGITUDINAL SLAB REINFORCING BARS THAT CONFLICT WITH THE DRAIN SHALL BE CUT OFF TO PROVIDE 2 INCH CLEARANCE FROM THE DRAIN. ALL CUT ENDS OF BARS SHALL BE COATED WITH EPOXY PATCHING MATERIAL SUPPLIED BY THE MANUFACTURER OF THE EPOXY COATING. LONGITUDINAL SLAB REINFORCING BARS SHALL BE SHIFTED AS NECESSARY TO ACCOMMODATE ANCHOR BARS.

MATERIALS

PLATES, BARS, THREADED RODS AND ANGLES SHALL MEET THE REQUIREMENTS ASTM A709 GRADE 36. THE TUBE STEEL SHALL MEET THE REQUIREMENTS ASTM A500 GRADE B.

3/8"Φ MECHANICALLY GALVANIZED STEEL SOCKET FLAT COUNTERSUNK HEAD CAP SCREW SHALL MEET THE REQUIREMENTS OF ASTM F879-91.

3/8"Φ MECHANICALLY GALVANIZED STEEL HEX HEAD BOLT SHALL MEET THE REQUIREMENTS OF IM 453.07.

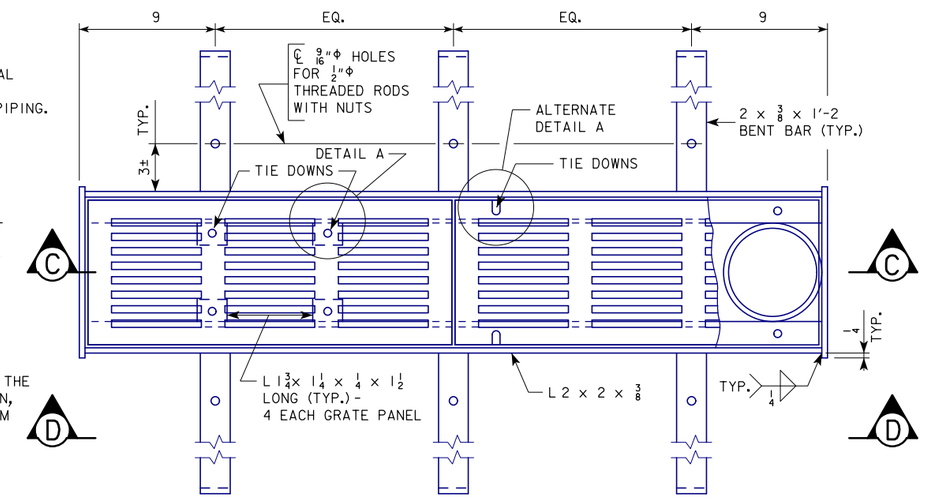

PLAN VIEW OF DRAIN TRENCH

(GRATE TIE DOWNS SHOW BOTH DETAIL A AND ALTERNATE DETAIL A)

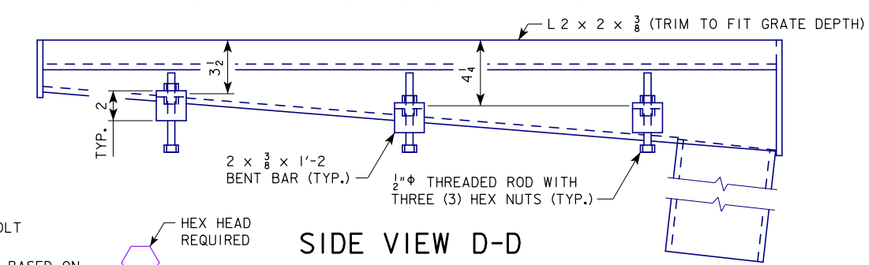

SIDE VIEW D-D

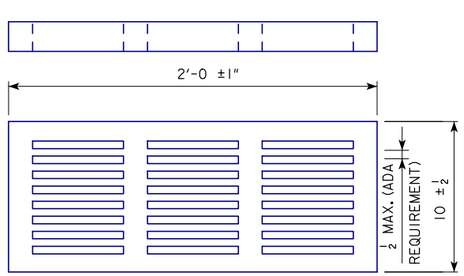

DRAIN TRENCH GRATE DETAILS

(2 GRATES REQUIRED PER DRAIN)

NOTE: PATTERN AND DIRECTION OF GRATE OPENINGS SHALL BE SIMILAR TO THE PATTERN SHOWN.

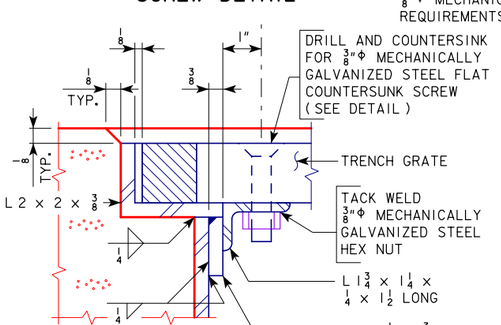

DETAIL A

(4 MOUNTING ANGLES PER GRATE PANEL)

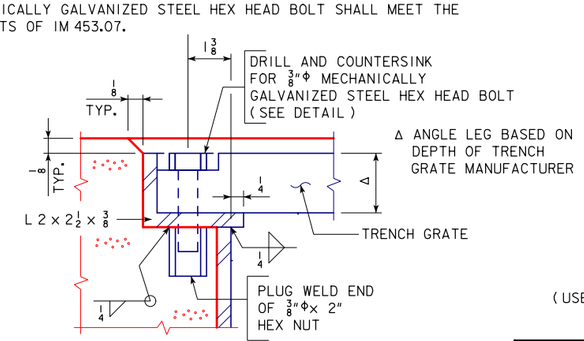

ALTERNATE DETAIL A

(4 PER GRATE PANEL)

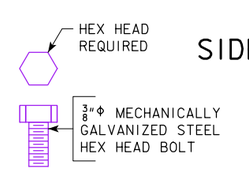

HEX HEAD BOLT DETAIL

(USED FOR ALTERNATE DETAIL A)

NOTE: 3 DRAINS REQUIRED.

DESIGN FOR VARIABLE SKEW (L.A.)

2271'-6 x VARI. CONTINUOUS WELDED GIRDER BRIDGE-EBL W/14' BIKE TRAIL

138'-10 & 151'-0 7/8 END SPANS MULTIPLE LENGTH INTERIOR SPANS

BIKE TRAIL DECK DRAIN DETAILS

STA. 6792+60.93 - 52' LEFT ℄ I-74 OCTOBER, 2015

SCOTT COUNTY

IOWA DEPARTMENT OF TRANSPORTATION - HIGHWAY DIVISION

DESIGN SHEET NO. 270 OF 282 FILE NO. 30253 DESIGN NO. 3408

REVISED 07-11 - CHANGED THE TRENCH GATE AASHTO LOADING FROM HS20 TO HL-93. CHANGED DRAIN PIPE TO ROUND TUBE WITH SQUARE TUBE OPTION. GRATE HOLD DOWN BOLTS CHANGED TO 3/8" SIZE.
ENGLISHMISCELLANEOUSBRIDGES.DGN 1054 - THIS SHEET REDRAWN 11-00.

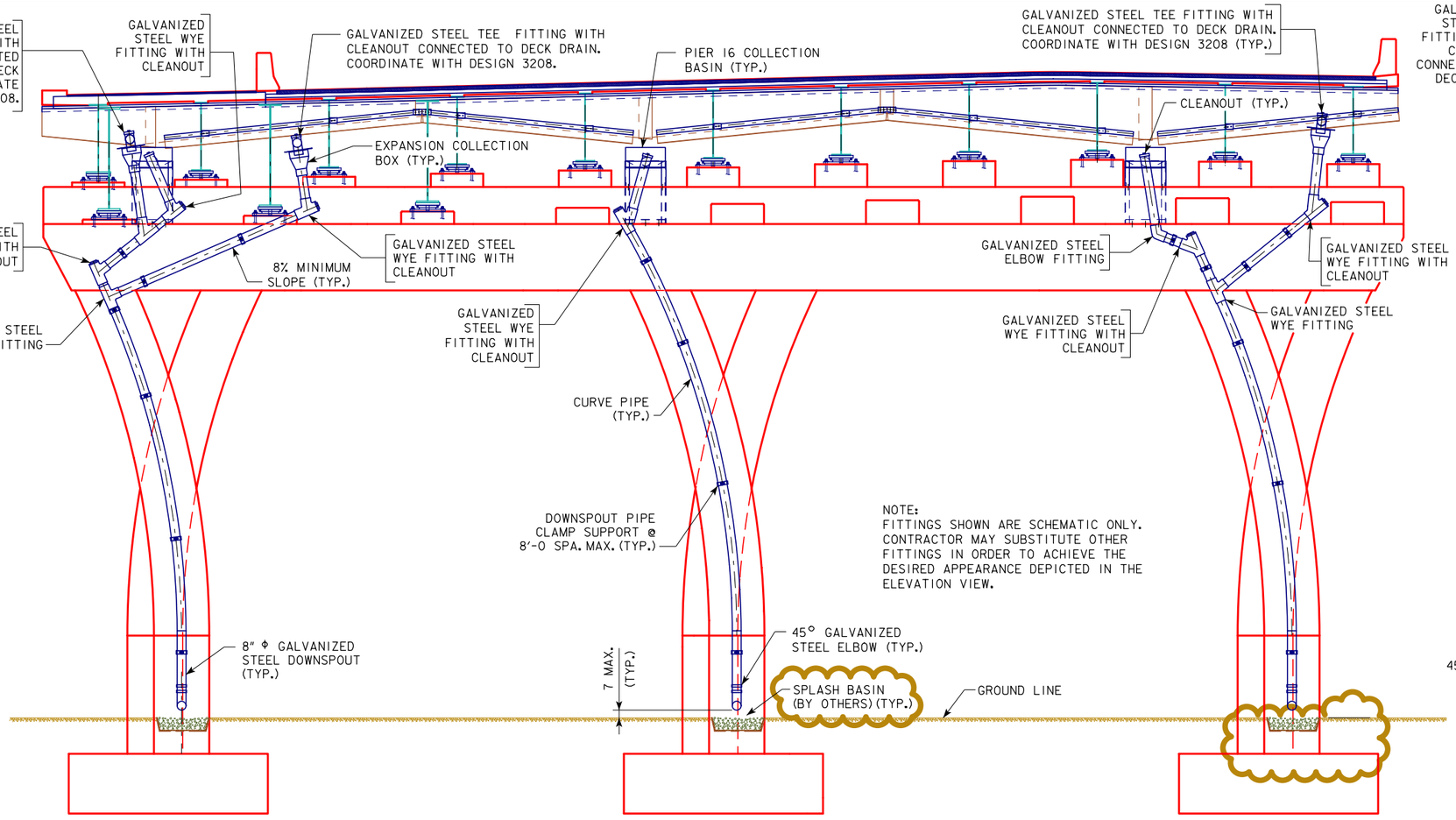

ELEVATION VIEW - PIER 16

LOOKING UPSTATION

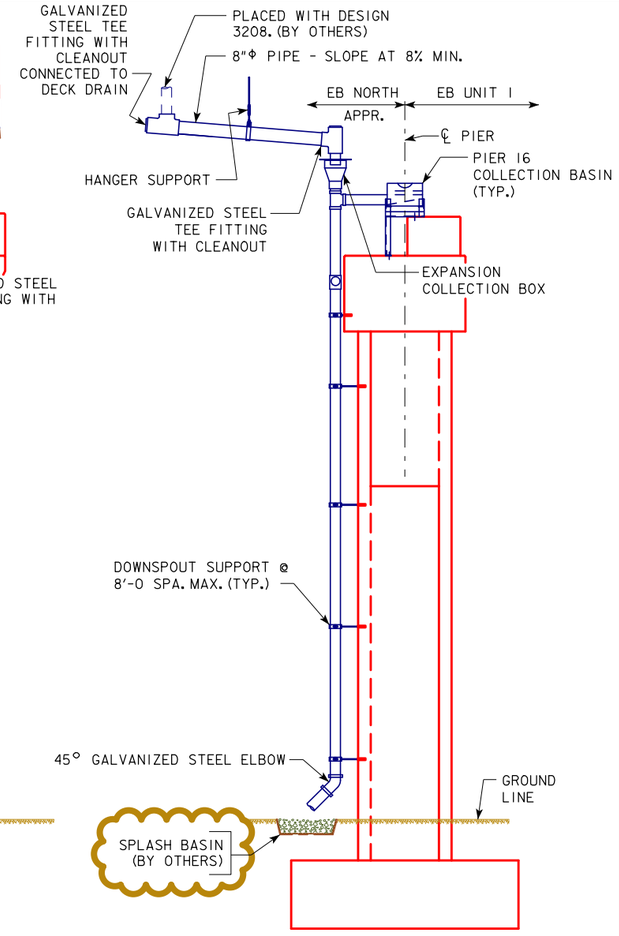

END VIEW - PIER 16

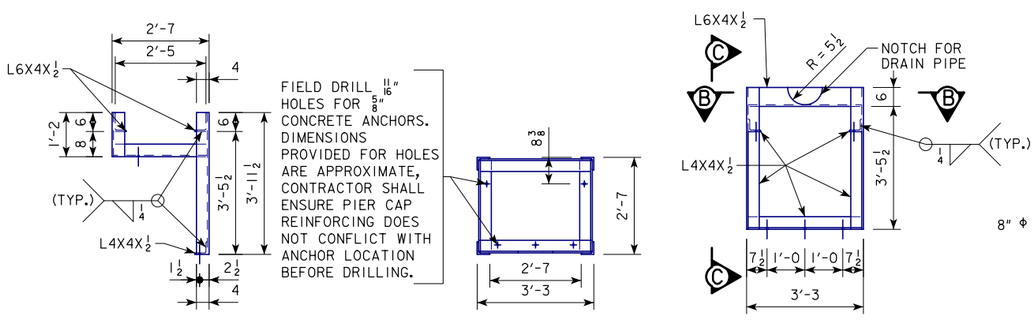

VIEW C-C VIEW B-B FRONT VIEW

WELDED STEEL SUPPORT FRAME DETAILS

NOTE: WELDED STEEL SUPPORT FRAME SHALL BE GALVANIZED AFTER WELDING.

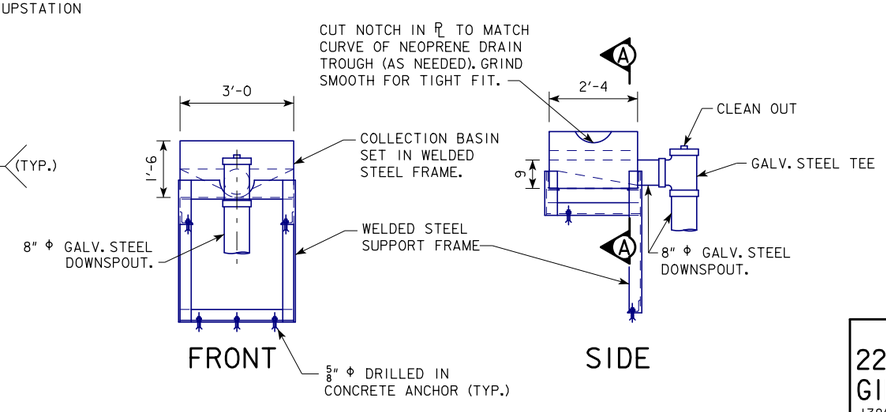

FRONT SIDE

PIER 16 COLLECTION BASIN DETAILS

NOTES:

FOR SECTION A-A SEE DESIGN SHEET 275.

FOR PIPE SUPPORT DETAILS AND DRAINAGE NOTES SEE DESIGN SHEET 275.

FOR EXPANSION COLLECTION BOX DETAILS SEE DESIGN SHEET 272.

whks
engineers + planners + land surveyors

DESIGN FOR VARIABLE SKEW (L.A.)

2271'-6 x VARI. CONTINUOUS WELDED GIRDER BRIDGE-EBL W/14' BIKE TRAIL

138'-10 & 151'-0⅞ END SPANS MULTIPLE LENGTH INTERIOR SPANS

DRAINAGE SYSTEM DETAILS

STA. 6792+60.93 - 52' LEFT ℄ I-74 OCTOBER, 2015

SCOTT COUNTY

IOWA DEPARTMENT OF TRANSPORTATION - HIGHWAY DIVISION

DESIGN SHEET NO. 271 OF 282 FILE NO. 30253 DESIGN NO. 3408

SECTION A-A

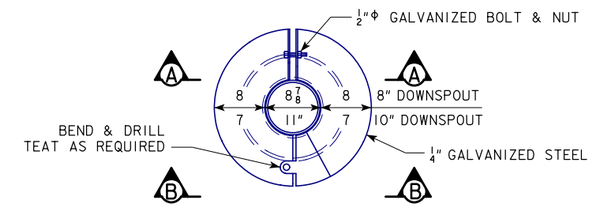

PLAN

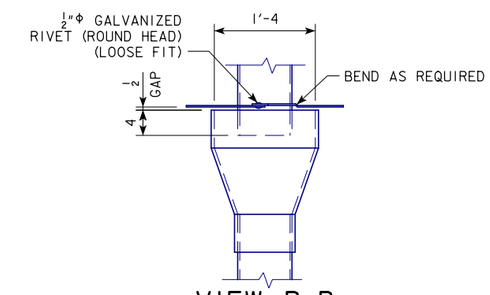

VIEW B-B
EXPANSION COLLECTION
BOX DETAILS

NOTES:

FOR PIPE SUPPORT DETAILS AND DRAINAGE SYSTEM NOTES SEE DESIGN SHEET 275.

whks
engineers + planners + land surveyors

DESIGN FOR VARIABLE SKEW (L.A.)

2271'-6 x VARI. CONTINUOUS WELDED GIRDER BRIDGE-EBL W/14' BIKE TRAIL

138'-10 & 151'-0 7/8 END SPANS MULTIPLE LENGTH INTERIOR SPANS

DRAINAGE SYSTEM DETAILS

STA. 6792+60.93 - 52' LEFT ℄ I-74 OCTOBER, 2015

SCOTT COUNTY

IOWA DEPARTMENT OF TRANSPORTATION - HIGHWAY DIVISION

DESIGN SHEET NO. 272 OF 282 FILE NO. 30253 DESIGN NO. 3408

DESIGN TEAM CF / LG / JP	SCOTT COUNTY	PROJECT NUMBER BRFIM-074-1(200)5--05-82	SHEET NUMBER 273

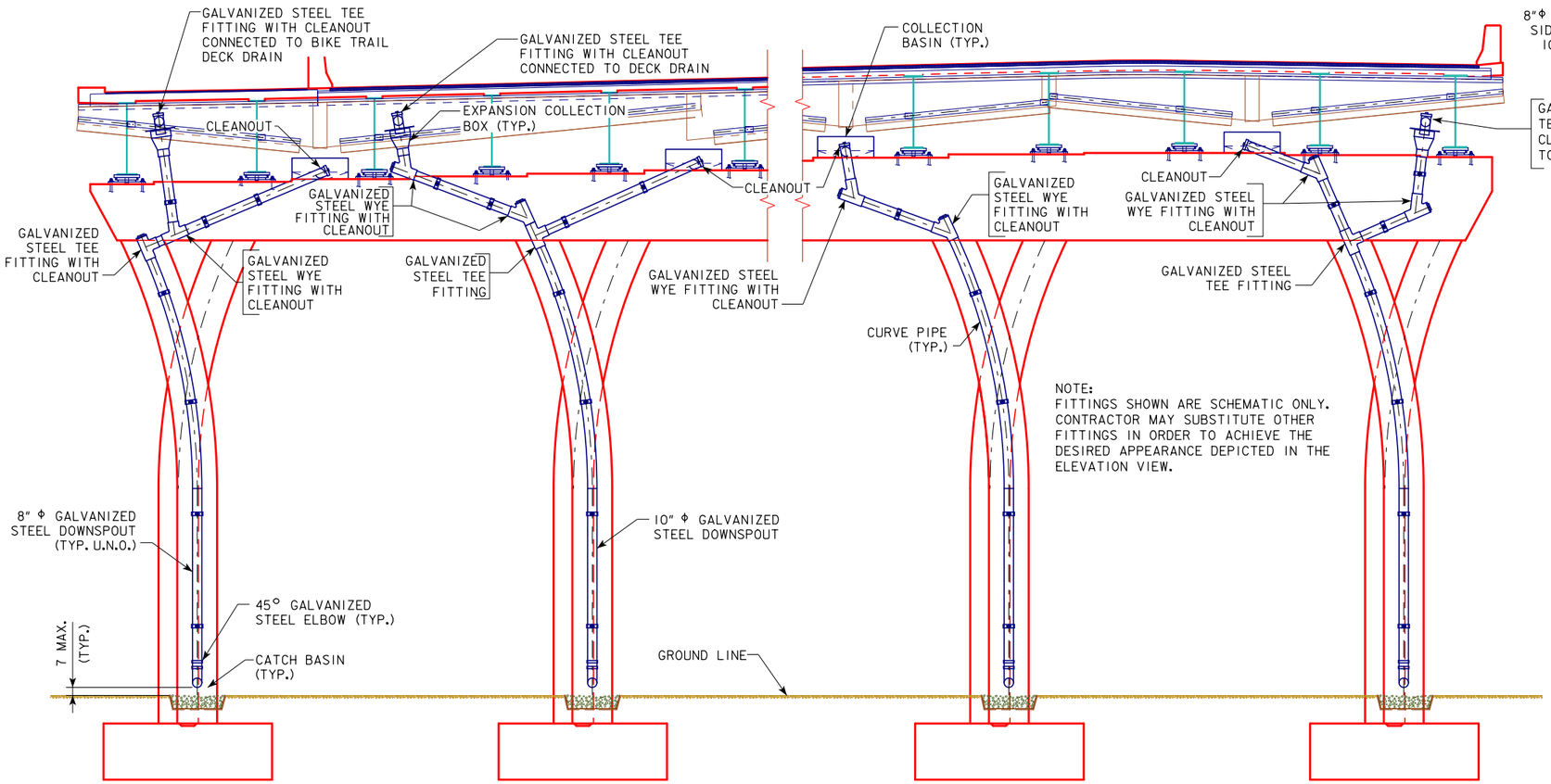

NOTE:
FITTINGS SHOWN ARE SCHEMATIC ONLY. CONTRACTOR MAY SUBSTITUTE OTHER FITTINGS IN ORDER TO ACHIEVE THE DESIRED APPEARANCE DEPICTED IN THE ELEVATION VIEW.

ELEVATION VIEW - PIER 21

LOOKING UPSTATION

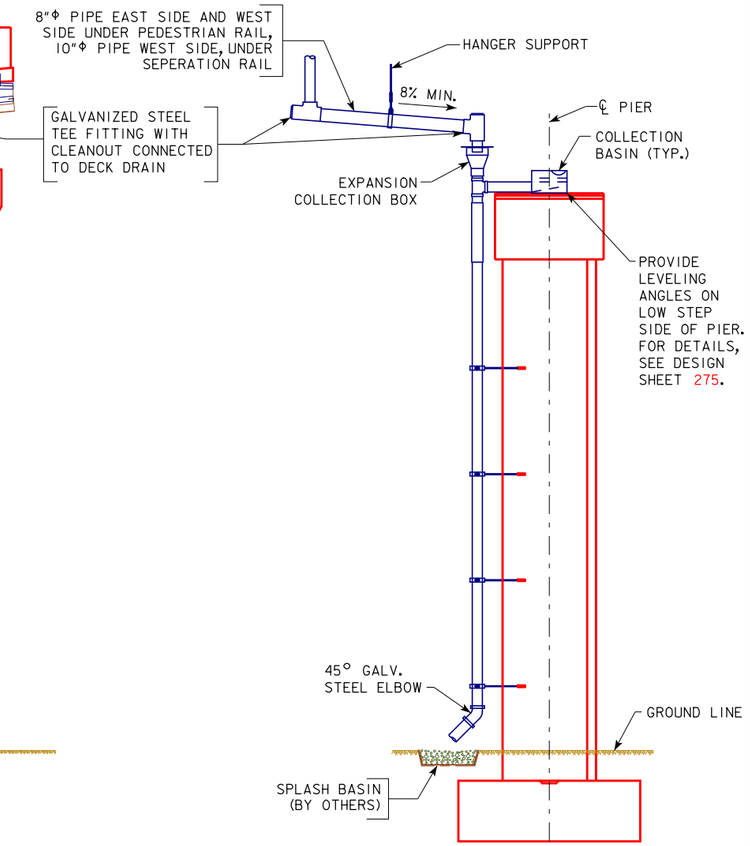

END VIEW - PIER 21

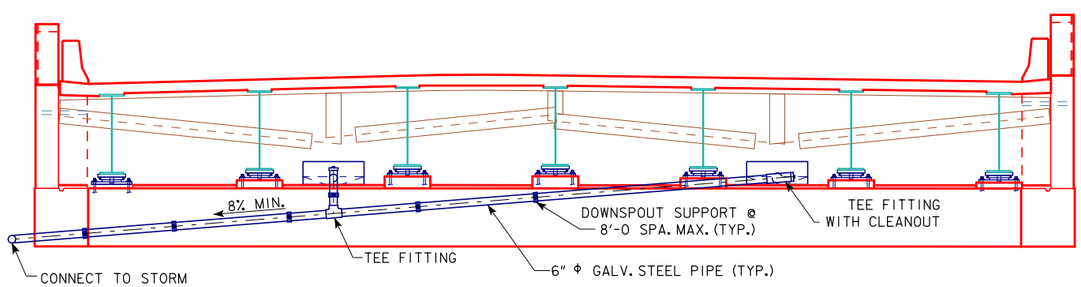

ELEVATION VIEW - ABUTMENT 32

LOOKING UPSTATION

END VIEW - ABUT. 32

NOTES:

FOR PIPE SUPPORT DETAILS AND DRAINAGE SYSTEM NOTES SEE DESIGN SHEET 275.

FOR EXPANSION COLLECTION BOX DETAILS SEE DESIGN SHEET 272.

whks
engineers + planners + land surveyors

DESIGN FOR VARIABLE SKEW (L.A.)

2271'-6 x VARI. CONTINUOUS WELDED GIRDER BRIDGE-EBL W/14' BIKE TRAIL

138'-10 & 151'-0 7/8 END SPANS MULTIPLE LENGTH INTERIOR SPANS

DRAINAGE SYSTEM DETAILS

STA. 6792+60.93 - 52' LEFT ℄ I-74 OCTOBER, 2015

SCOTT COUNTY

IOWA DEPARTMENT OF TRANSPORTATION - HIGHWAY DIVISION

DESIGN SHEET NO. 273 OF 282 FILE NO. 30253 DESIGN NO. 3408

DESIGN TEAM CF / LG / JP	SCOTT COUNTY	PROJECT NUMBER BRFIM-074-1(200)5--05-82	SHEET NUMBER 274

NOTE:
FITTINGS SHOWN ARE SCHEMATIC ONLY. CONTRACTOR MAY SUBSTITUTE OTHER FITTINGS IN ORDER TO ACHIEVE THE DESIRED APPEARANCE DEPICTED IN THE ELEVATION VIEW.

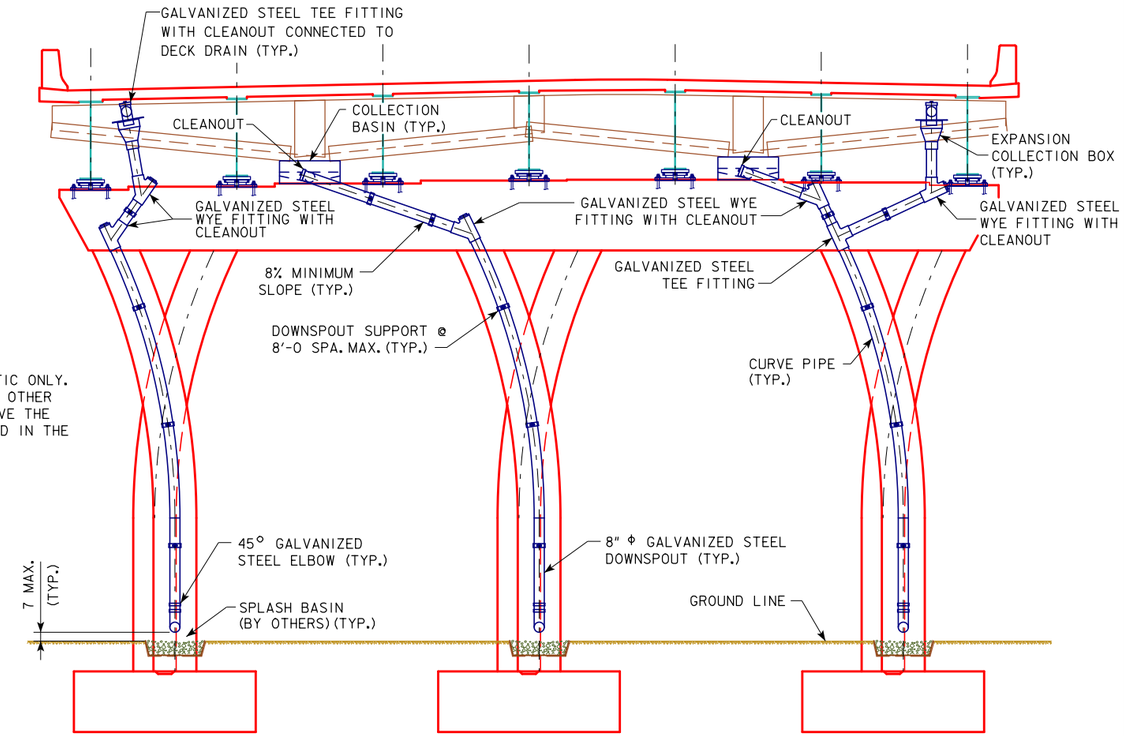

ELEVATION VIEW - PIERS 25 & 28

LOOKING DOWNSTATION

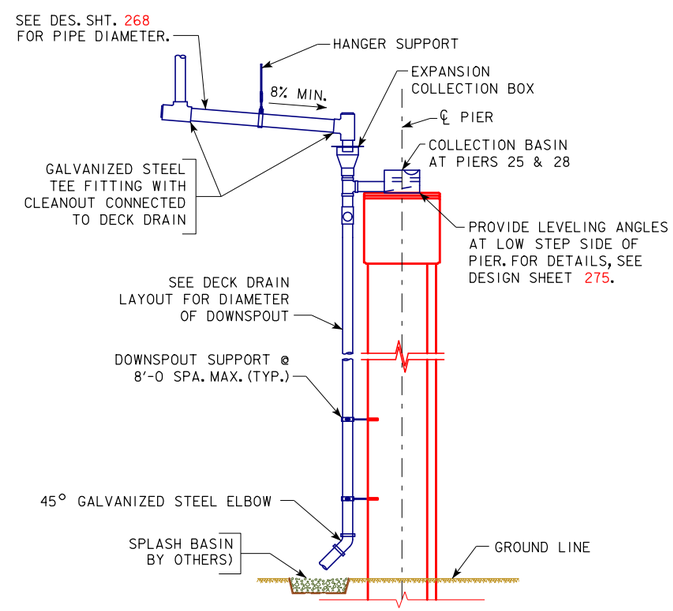

TYPICAL END VIEW - PIERS 25 & 28

NOTES:

FOR PIPE SUPPORT DETAILS AND DRAINAGE NOTES SEE DESIGN SHEET 275.

FOR EXPANSION COLLECTION BOX DETAILS SEE DESIGN SHEET 272.

whks
engineers + planners + land surveyors

DESIGN FOR VARIABLE SKEW (L.A.)

2271'-6 x VARI. CONTINUOUS WELDED GIRDER BRIDGE-EBL W/14' BIKE TRAIL

138'-10 & 151'-0 7/8 END SPANS MULTIPLE LENGTH INTERIOR SPANS

DRAINAGE SYSTEM DETAILS

STA. 6792+60.93 - 52' LEFT ℄ I-74 OCTOBER, 2015

SCOTT COUNTY

IOWA DEPARTMENT OF TRANSPORTATION - HIGHWAY DIVISION

DESIGN SHEET NO. 274 OF 282 FILE NO. 30253 DESIGN NO. 3408

DRAINAGE SYSTEM NOTES:

ALL PIPE, ELBOWS, AND FITTINGS SHALL BE ASTM A53, GRADE B, SCHEDULE 40, GALVANIZED.

THE COLLECTION BASIN PLATES, LEVELING ANGLES, AND THREADED RODS SHALL MEET THE REQUIREMENTS OF ASTM A709 GRADE 36 STEEL.

PIPE CLAMPS SHALL BE GALVANIZED. THREE PRODUCTS MEETING THE REQUIREMENTS ARE SUPER-STRUT, THOMAS AND BETTS, UNISTRUT OR APPROVED EQUAL.

BOLTS, NUTS, WASHERS, AND TURNBUCKLES SHALL MEET THE REQUIREMENTS OF ASTM A307.

ALL DRAINAGE COMPONENTS, INCLUDING COLLECTION BASIN, EYEROD HANGERS, RODS, PIPE CLAMPS, FILL PLATES, LEVELING ANGLES, BOLTS, NUTS AND LOCKWASHERS ARE TO BE GALVANIZED.

ALL PIPE TO PIPE CONNECTIONS SHALL BE MADE WITH FLANGED OR GROOVED COUPLINGS WHERE POSSIBLE. ALL FITTINGS SHALL BE THREADED OR GROOVED. WELDED CONNECTIONS AND PIPE SPLICES ARE PERMISSIBLE WHERE FLANGED OR GROOVED COUPLINGS ARE NOT PRACTICAL. IF CONNECTIONS ARE WELDED, THE WELDING MUST OCCUR PRIOR TO HOT-DIP GALVANIZING. CONNECTIONS SHALL BE WATER TIGHT. COMPATIBLE MATERIAL SHALL BE USED FOR ALL COUPLINGS AND FITTINGS ACCORDING TO MANUFACTURER RECOMMENDATIONS

ROLL-FORMING OF CURVED PIPE SHALL BE REQUIRED.

RUNS OF PIPE SHALL BE SUPPORTED AT SPACING NOT EXCEEDING THOSE SET BY THE MANUFACTURER OF THE PIPE.

PIPE HANGERS SHALL BE PROVIDED ON ALL HORIZONTAL PIPES AT EACH TEE, ELBOW, OR CHANGE IN DIRECTION AND AT INTERMEDIATE POINTS AT NOT MORE THAN 5'-0 CTRS.

ALL MECHANICAL CONCRETE ANCHORS OR MECHANICAL INSERTS SHALL CONFORM TO MATERIALS IM 453.09. ALL COMPONENTS OF PIPE SUPPORT ASSEMBLIES (INCLUDING BUT NOT LIMITED TO ANCHORS, INSERTS, PIPE CLAMPS, COUPLING NUTS, AND THREADED RODS) SHALL BE HOT DIP OR MECHANICALLY GALVANIZED STEEL ONLY. ELECTRODEPOSITED ZINC COATING WILL NOT BE ALLOWED. CONCRETE INSERTS IN THE DECK SLAB FOR PIPE HANGERS SHALL BE CAST-IN-PLACE WITH A $\frac{3}{4}$" NUT AND SHALL HAVE A MINIMUM ALLOWABLE TENSION LOAD OF 1000 LBS. HORIZONTAL CONCRETE ANCHORS OR INSERTS FOR DOWNSPOUT SUPPORTS SHALL BE POST-INSTALLED MECHANICAL CONCRETE ANCHORS OR CAST-IN-PLACE CONCRETE INSERTS AND SHALL HAVE AN ALLOWABLE SHEAR LOAD OF 1000 LBS.

THE BID ITEM "BRIDGE DRAINAGE SYSTEM" SHALL INCLUDE ALL COSTS AS LISTED IN THE ESTIMATE REFERENCE INFORMATION ON DESIGN SHEET 1.

THE COLLECTION BASIN SHALL BE FABRICATED FROM $\frac{3}{8}$" THICK STEEL PLATE. SECTIONS SHALL BE CONNECTED WITH $\frac{1}{4}$" CONTINUOUS FILLET WELDS.

DRAINS SHALL BE LOCATED CLEAR OF ALL DIAPHRAGMS.

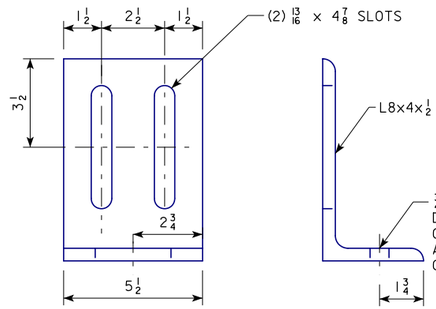

BASIN LEVELING ANGLE

NOTE: PROVIDE (2) LEVELING ANGLES AND (4) NUTS AND WASHERS AT EACH BASIN FOR PIERS 21, 25 & 28. LEVELING ANGLE SHALL BE ATTACHED TO THE BASIN ON THE LOW STEP SIDE OF THE PIER AND ADJUSTED TO KEEP THE BASIN LEVEL BEFORE ATTACHING DRAIN PIPES. LEVELING ANGLES SHALL BE ATTACHED TO THE PIER CAP WITH $\frac{5}{8}$" Φ CONCRETE ANCHORS TO SECURE THE BASIN.

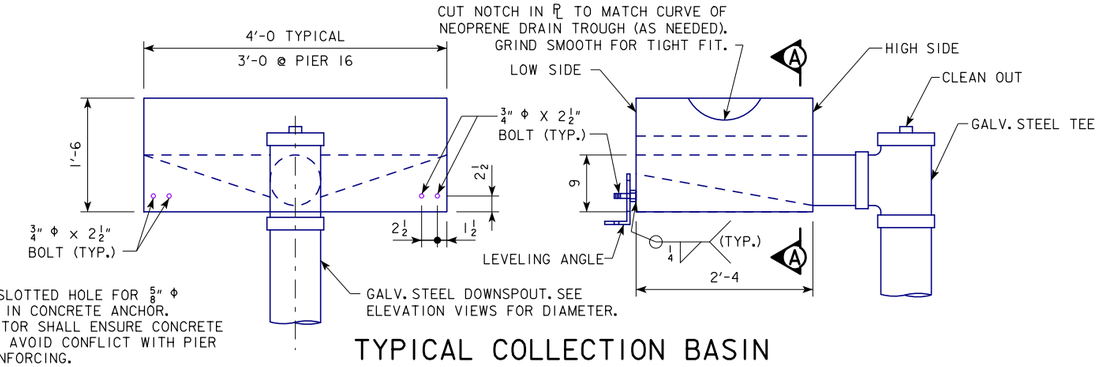

TYPICAL COLLECTION BASIN

DO NOT INCLUDE BOLTS FOR BASINS AT PIER 16 OR ABUT. 32

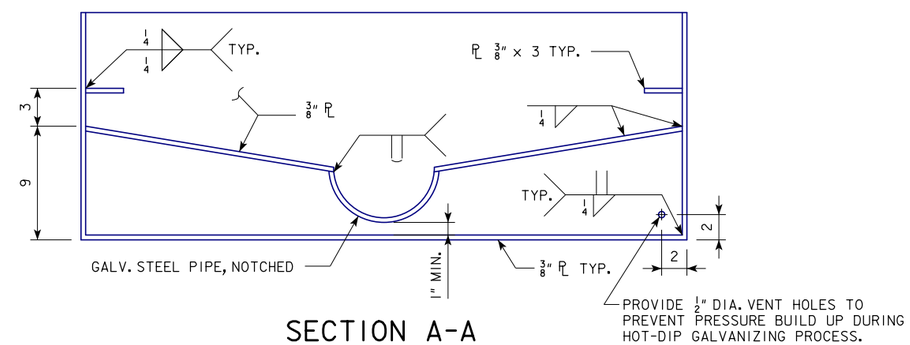

SECTION A-A

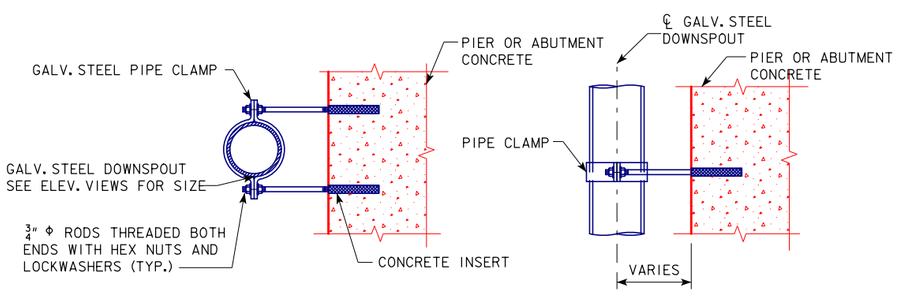

DOWNSPOUT SUPPORT DETAILS

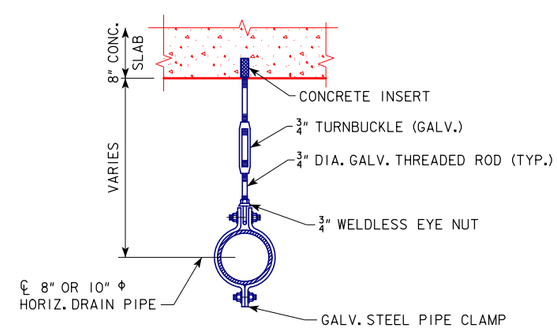

PIPE HANGER DETAILS

whks
engineers + planners + land surveyors

DESIGN FOR VARIABLE SKEW (L.A.)

227'-6 x VARI. CONTINUOUS WELDED GIRDER BRIDGE-EBL W/14' BIKE TRAIL

138'-10 & 151'-$0\frac{7}{8}$ END SPANS MULTIPLE LENGTH INTERIOR SPANS

DRAINAGE SYSTEM DETAILS

STA. 6792+60.93 - 52' LEFT ℄ I-74 OCTOBER, 2015

SCOTT COUNTY

IOWA DEPARTMENT OF TRANSPORTATION - HIGHWAY DIVISION

DESIGN SHEET NO. 275 OF 282 FILE NO. 30253 DESIGN NO. 3408

DESIGN TEAM CF / LG / JP	SCOTT COUNTY	PROJECT NUMBER BRFIM-074-1(200)5--05-82	SHEET NUMBER 276

BENCH MARK NO. 500: STA. 6781+18.92 LT. 161.19'
ELEV. 575.797, CHISELED "X" IN BOLT E. SIDE
CONCRETE STRUCTURE

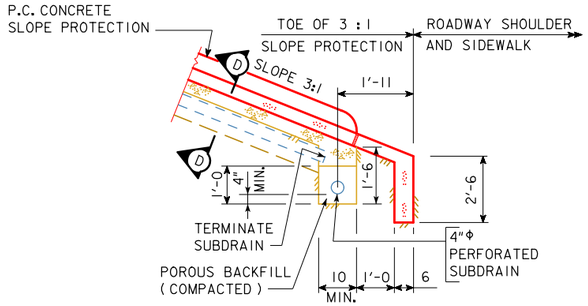

SECTION B-B

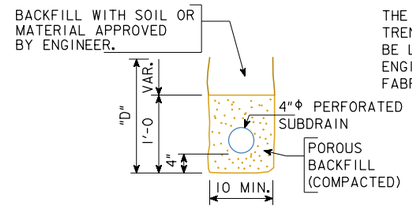

SECTION C-C
(TYPICAL)

"D" = DEPTH REQUIRED TO PROVIDE PROPER
FLOW LINE FOR SUBDRAIN.

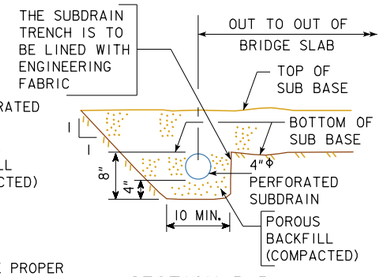

SECTION D-D
(TYPICAL)

ENGINEERING FABRIC ENDS
ARE TO BE BURIED
6" TO PREVENT
UNDERMINING.

ENGINEERING
FABRIC DETAIL

SUBDRAIN NOTES :

THIS PLAN SHEET SHOWS DETAILS FOR PLACING ALL SUBDRAINS AND SUBDRAIN OUTLETS REQUIRED FOR THIS STRUCTURE.

THE SUBDRAINS SHALL BE 4" IN DIAMETER AND SHALL BE IN ACCORDANCE WITH ARTICLE 4143.01, B, OF THE STANDARD SPECIFICATIONS. THE SUBDRAIN OUTLET SHALL CONSIST OF A 6'-0 LENGTH OF PIPE WITH A REMOVABLE RODENT GUARD AS DETAILED ON THIS SHEET.

THE COST OF FURNISHING AND PLACING SUBDRAIN (INCLUDING EXCAVATION), GRANULAR BACKFILL, POROUS BACKFILL, AND SUBDRAIN OUTLET IS TO BE INCLUDED IN THE PRICE BID FOR "STRUCTURAL CONCRETE (BRIDGE)". NO EXTRA PAYMENT WILL BE MADE.

THE DIMENSIONS SHOWN FOR THE PROPOSED SUBDRAINS ARE BASED ON THE PROPOSED GRADING LAYOUT OF BRIDGE BERMS. THE DIMENSIONS SHOWN ARE FOR ESTIMATING ONLY. REQUIRED LENGTHS AND GENERAL LOCATIONS OF SUBDRAINS ARE SUBJECT TO CHANGE DUE TO FIELD ADJUSTMENTS OF THE GRADING LAYOUT.

THE UPHILL END OF THE PERFORATED SUBDRAIN AT THE TOE OF SLOPE PROTECTION SHALL BE CAPPED AS APPROVED BY THE ENGINEER.

ALL COSTS ASSOCIATED WITH FURNISHING AND INSTALLING THE 6 INCH GALVANIZED STEEL PIPE WITH RODENT GUARD SHALL BE INCLUDED IN THE PRICE BID FOR 'BRIDGE DRAINAGE SYSTEM'.

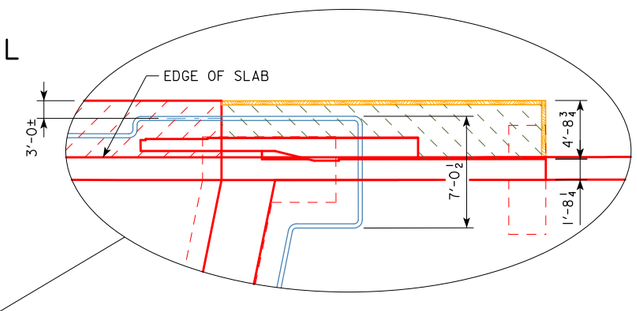

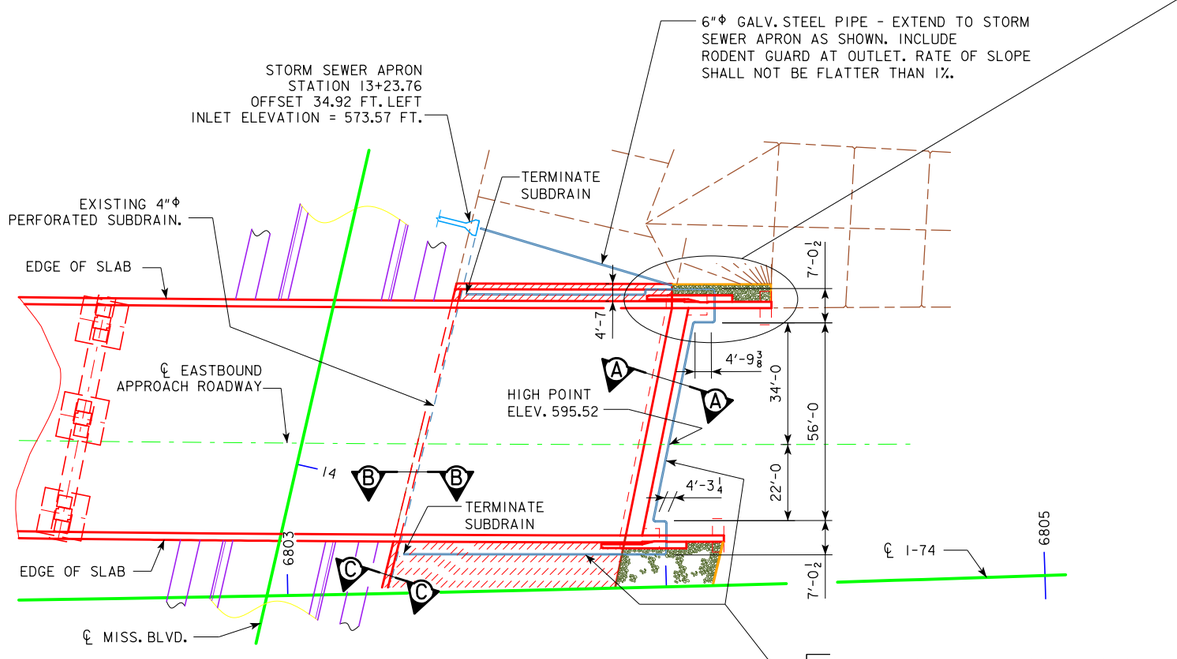

4"Φ PERFORATED SUBDRAIN TO BE SLOPED DOWNWARD FROM EACH SIDE OF THE CONSTRUCTION JOINT AND UNDERNEATH THE SLOPE PROTECTION AND TERMINATE AS INDICATED. RATE OF SLOPE SHALL NOT BE FLATTER THAN 2%.

SITUATION PLAN
SHOWING SUBDRAIN LOCATIONS

N

6"Φ CORRUGATED METAL PIPE OUTLET, OR 4"Φ CORRUGATED DOUBLE-WALLED PE OR PVC PIPE OUTLET WITH AN APPROPRIATE COUPLER. IF METAL PIPE IS USED, THE PIPES SHOULD BE COUPLED IN ONE OF THE TWO FOLLOWING WAYS.

1. USE AN INSIDE FIT REDUCER COUPLER (COUPLER MUST BE INSERTED A MINIMUM OF 1'-0 INTO CMP.
2. INSERT 1'-0 OF THE 4"Φ SUBDRAIN INTO THE 6"Φ METAL OUTLET PIPE, THEN FULLY SEAL THE ENTIRE OPENING WITH GROUT.

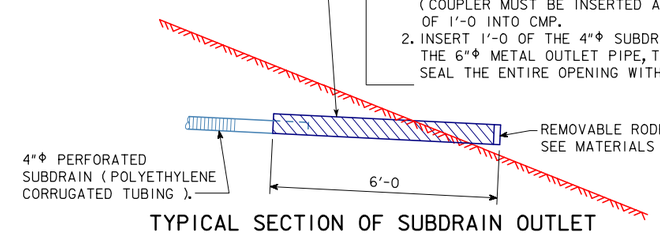

TYPICAL SECTION OF SUBDRAIN OUTLET

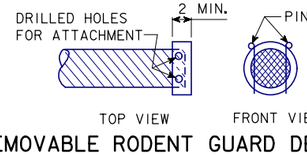

REMOVABLE RODENT GUARD DETAILS
OUTLET DETAILS

NOTE:
SECTION A- A IS SHOWN ON ABUTMENT BACKFILL DETAILS SHEET.

DESIGN FOR VARIABLE SKEW (L.A.)

2271'-6 x VARI. CONTINUOUS WELDED GIRDER BRIDGE-EBL W/14' BIKE TRAIL

138'-10 & 151'-0 7/8 END SPANS MULTIPLE LENGTH INTERIOR SPANS

SUBDRAIN DETAILS - UNIT 4

STA. 6792+60.93 - 52' LEFT ℄ I-74 OCTOBER, 2015

SCOTT COUNTY

IOWA DEPARTMENT OF TRANSPORTATION - HIGHWAY DIVISION

DESIGN SHEET NO. 276 OF 282 FILE NO. 30253 DESIGN NO. 3408

whks
engineers + planners + land surveyors

REVISED 10-09 - THE SPECIFICATION REFERENCES CHANGED.
ENGLISHFORESLOPEPROTECTIONBRIDGES.DGN 1007 - THIS SHEET ISSUED 12-07-98.

DESIGN TEAM JP / LG / RE	SUBDRAIN DETAILS (CONCRETE SLOPE PROTECTION)	STANDARD SHEET 1007 (MODIFIED)	SCOTT COUNTY	PROJECT NUMBER BRFIM-074-1(200)5--05-82	SHEET NUMBER 277

BENCH MARK NO. 500: STA. 6781+18.92 LT. 161.19'
ELEV. 575.797, CHISELED "X" IN BOLT E. SIDE
CONCRETE STRUCTURE

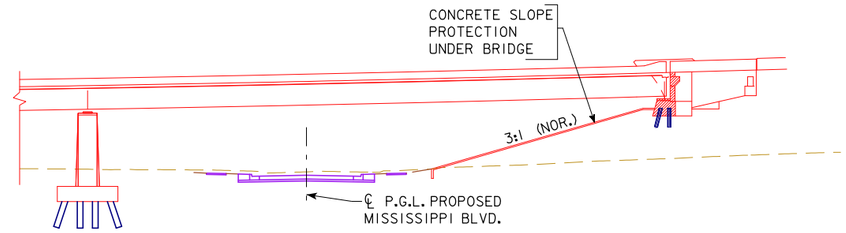

LONGITUDINAL SECTION ALONG ℄ ROADWAY

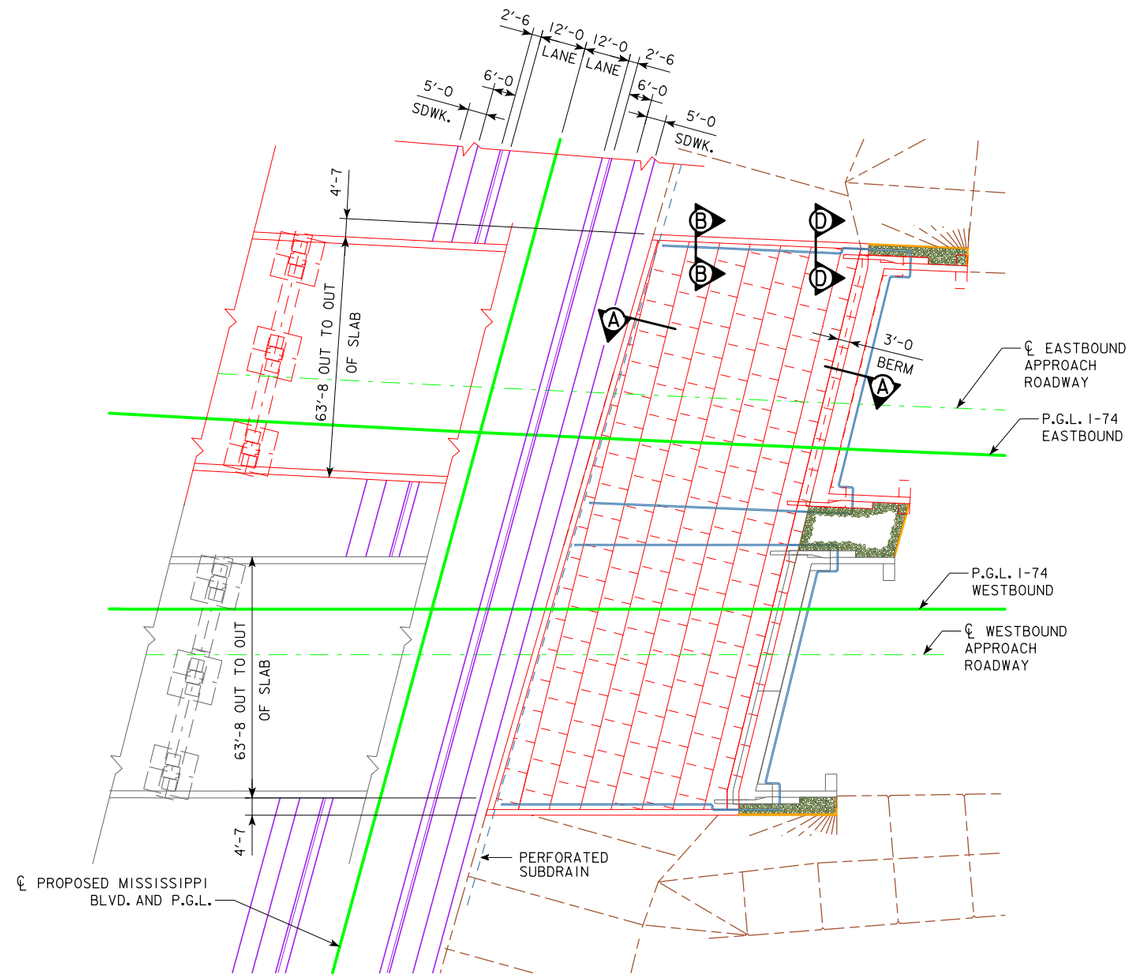

SLOPE PROTECTION LAYOUT

N

NOTE:
SEE DESIGN SHEET 278 FOR
SECTIONS A-A, B-B AND D-D.

whks
engineers + planners + land surveyors

DESIGN FOR VARIABLE SKEW (L.A.)

2271'-6 x VARI. CONTINUOUS WELDED GIRDER BRIDGE-EBL W/14' BIKE TRAIL

138'-10 & 151'-0 7/8 END SPANS MULTIPLE LENGTH INTERIOR SPANS

CONCRETE SLOPE PROTECTION-UNIT 4

STA. 6792+60.93 - 52' LEFT ℄ I-74 OCTOBER, 2015

SCOTT COUNTY

IOWA DEPARTMENT OF TRANSPORTATION - HIGHWAY DIVISION

DESIGN SHEET NO. 277 OF 282 FILE NO. 30253 DESIGN NO. 3408

BENCH MARK NO. 500: STA. 6781+18.92 LT. 161.19'
ELEV. 575.797, CHISELED "X" IN BOLT E. SIDE
CONCRETE STRUCTURE

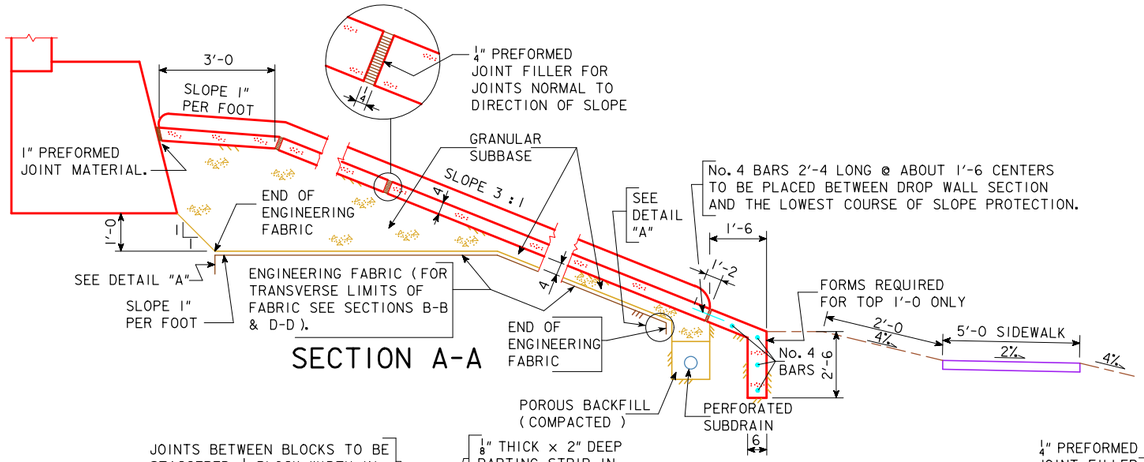

SECTION A-A

ENGINEERING FABRIC ENDS ARE TO BE BURIED 6" TO PREVENT UNDERMINING.

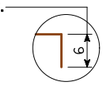

DETAIL "A"

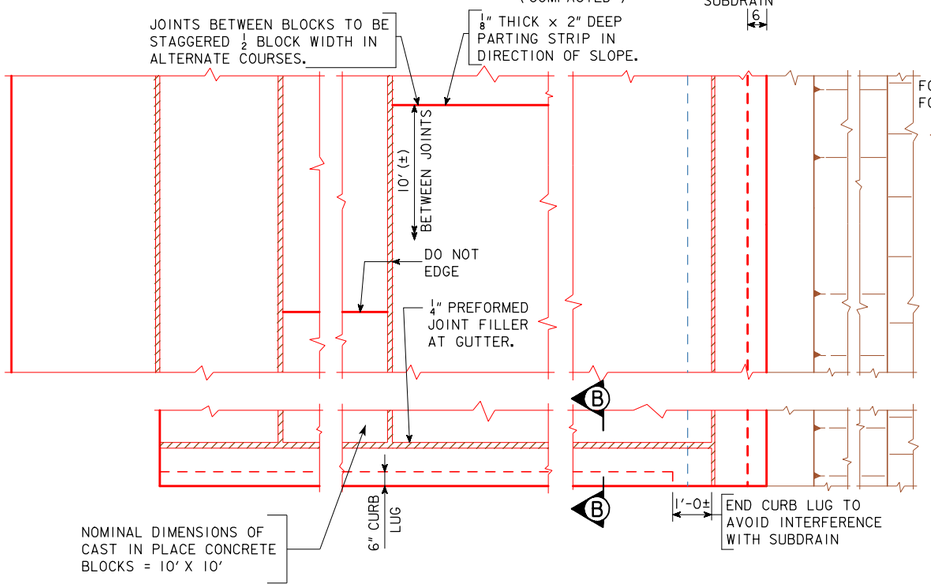

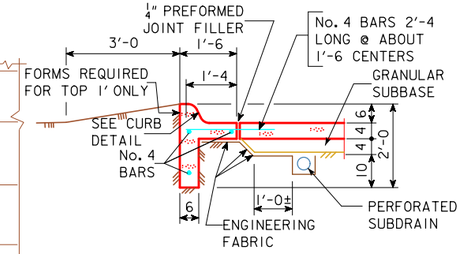

SECTION B-B
(THROUGH 4" THICK GRANULAR SUBBASE)

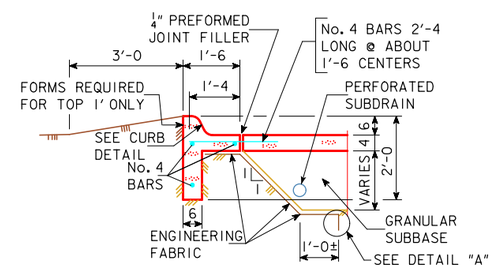

SECTION D-D
(THROUGH VARIABLE THICKNESS GRANULAR SUBBASE)

NOTE:

SEE DESIGN SHEET 277 FOR LOCATIONS OF SECTIONS A-A, B-B AND D-D.

ESTIMATED QUANTITIES

DESCRIPTION	LOCATION	QUANTITY
CONCRETE SLOPE PROTECTION	ABUT. 32 EB & WB	1105 SQ.YDS.
	TOTAL	1105 SQ.YDS.

ITEMS TO BE INCLUDED IN "CONCRETE SLOPE PROTECTION":
- ENGINEERING FABRIC AS DETAILED
- GRANULAR SUBBASE
- CLASS "C" STRUCTURAL CONCRETE
- #4 REINFORCING
- PREFORMED JOINT FILLER
- EXCAVATION, SHAPING AND COMPACTING

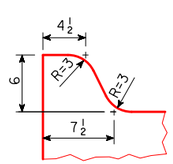

CURB DETAIL

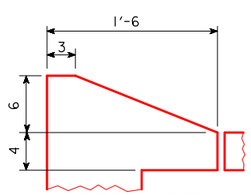

ALTERNATE CURB DETAIL

GENERAL NOTES:

THIS PLAN SHEET SHOWS DETAILS FOR PLACING A PORTLAND CEMENT CONCRETE SLOPE PROTECTION UNDER OVERHEAD STRUCTURES.

THE CURRENT SPECIFICATIONS OF THE IOWA DEPARTMENT OF TRANSPORTATION SHALL APPLY WITH MODIFICATIONS OR ADDITIONS LISTED BELOW :

FINISH - CLASS I, FLOATED SURFACE FINISH.

CURE - CURE AS PER CURRENT SPECIFICATIONS.

GRANULAR SUBBASE - THIS PREWETTED MATERIAL SHALL BE DEPOSITED BY A METHOD APPROVED BY THE ENGINEER AND BE THOROUGHLY TAMPED OR VIBRATED TO INSURE COMPACTION. FINISHED SHAPE SHALL BE AS SHOWN IN SECTION A-A.

FORESLOPE PREPARATION - THE BRIDGE BERM FORESLOPE SHALL BE COMPACTED AND SHAPED AS SHOWN IN SECTION A-A ON THIS SHEET. THE BERM FORESLOPE SHALL BE FIRM WHEN THE ENGINEERING FABRIC AND GRANULAR SUBBASE ARE PLACED.

ENGINEERING FABRIC SHALL BE IN ACCORDANCE WITH ARTICLE 4196.01, B, 2, OF THE STANDARD SPECIFICATIONS.

IF THE ENGINEERING FABRIC IS LAPPED, THE LAPS SHALL BE A MINIMUM OF ONE FOOT IN LENGTH, SHINGLE FASHION WITH UP SLOPE LAP PIECE ON TOP AND STAPLED FOR CONTINUITY.

THE CAST IN PLACE CONCRETE IS TO BE POURED IN APPROXIMATELY 10' WIDE COURSES, BUT ALL COURSES ON ONE SLOPE SHOULD HAVE APPROXIMATELY EQUAL WIDTHS. ADJACENT COURSES SHALL NOT BE POURED WITHIN 15 HOURS OF ONE ANOTHER. THE JOINTS IN THE DIRECTION OF THE SLOPE ARE TO BE STAGGERED ABOUT 1/2 BLOCK WIDTH.

PAYMENT FOR "CONCRETE SLOPE PROTECTION" WILL BE MADE ON A SQUARE YARD BASIS FOR SLOPE PROTECTION CONSTRUCTED. THE UNIT PRICE BID PER SQUARE YARD IS TO INCLUDE COSTS OF ALL MATERIALS AND LABOR REQUIRED TO CONSTRUCT THE SLOPE PROTECTION AS SHOWN ON THESE PLANS. THE DISPOSAL OF EXCESS SOIL FROM SHAPING OR TRENCHING, AS DIRECTED BY THE ENGINEER, SHALL BE CONSIDERED INCIDENTAL TO PLACING THE CONCRETE SLOPE PROTECTION.

WHERE EROSION CONTROL WORK IS COMPLETED THE CONTRACTOR SHALL BE RESPONSIBLE FOR ANY PLANT MATERIALS DESTROYED ADJACENT TO SLOPE PROTECTION AREA. THE CONTRACTOR SHALL REPLANT, RESEED AND REMULCH ALL AREAS IN ACCORDANCE WITH SECTION 2601, OF THE STANDARD SPECIFICATIONS, AT HIS EXPENSE.

THE BRIDGE CONTRACTOR IS TO INSTALL SUBDRAINS AS DETAILED ON THE SUBDRAIN DETAILS SHEET.

FOR ELEVATIONS SEE DESIGN SHEET 276.

whks
engineers + planners + land surveyors

DESIGN FOR VARIABLE SKEW (L.A.)

2271'-6 x VARI. CONTINUOUS WELDED GIRDER BRIDGE-EBL W/14' BIKE TRAIL

138'-10 & 151'-0 7/8 END SPANS MULTIPLE LENGTH INTERIOR SPANS

CONCRETE SLOPE PROTECTION-UNIT 4

STA. 6792+60.93 - 52' LEFT ℄ I-74 OCTOBER, 2015

SCOTT COUNTY

IOWA DEPARTMENT OF TRANSPORTATION - HIGHWAY DIVISION

DESIGN SHEET NO. 278 OF 282 FILE NO. 30253 DESIGN NO. 3408

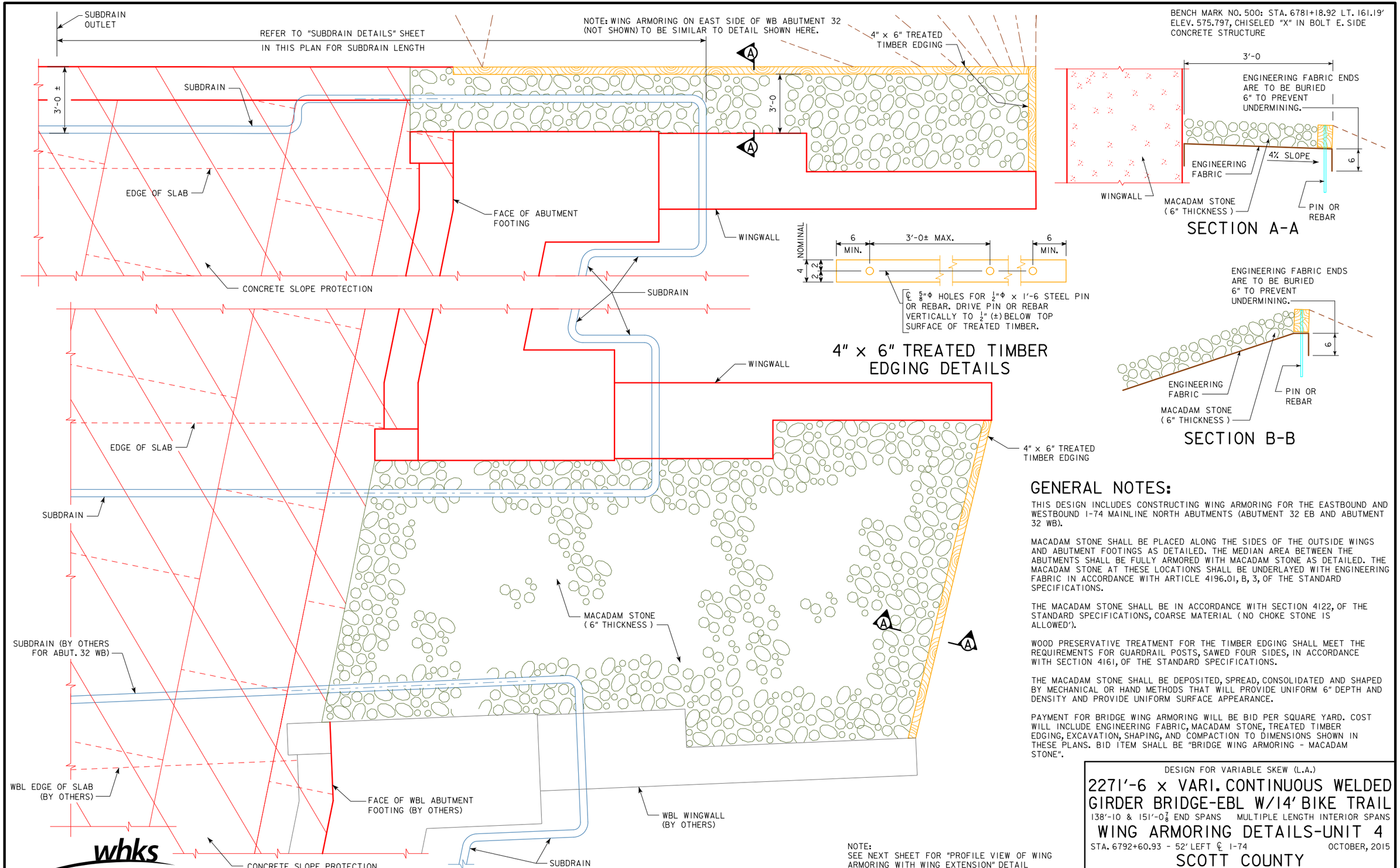

TOP VIEW OF WING ARMORING WITH WING EXTENSION

NOTE:
SEE NEXT SHEET FOR "PROFILE VIEW OF WING ARMORING WITH WING EXTENSION" DETAIL

GENERAL NOTES:

THIS DESIGN INCLUDES CONSTRUCTING WING ARMORING FOR THE EASTBOUND AND WESTBOUND I-74 MAINLINE NORTH ABUTMENTS (ABUTMENT 32 EB AND ABUTMENT 32 WB).

MACADAM STONE SHALL BE PLACED ALONG THE SIDES OF THE OUTSIDE WINGS AND ABUTMENT FOOTINGS AS DETAILED. THE MEDIAN AREA BETWEEN THE ABUTMENTS SHALL BE FULLY ARMORED WITH MACADAM STONE AS DETAILED. THE MACADAM STONE AT THESE LOCATIONS SHALL BE UNDERLAYED WITH ENGINEERING FABRIC IN ACCORDANCE WITH ARTICLE 4196.01, B, 3, OF THE STANDARD SPECIFICATIONS.

THE MACADAM STONE SHALL BE IN ACCORDANCE WITH SECTION 4122, OF THE STANDARD SPECIFICATIONS, COARSE MATERIAL (NO CHOKE STONE IS ALLOWED').

WOOD PRESERVATIVE TREATMENT FOR THE TIMBER EDGING SHALL MEET THE REQUIREMENTS FOR GUARDRAIL POSTS, SAWED FOUR SIDES, IN ACCORDANCE WITH SECTION 4161, OF THE STANDARD SPECIFICATIONS.

THE MACADAM STONE SHALL BE DEPOSITED, SPREAD, CONSOLIDATED AND SHAPED BY MECHANICAL OR HAND METHODS THAT WILL PROVIDE UNIFORM 6" DEPTH AND DENSITY AND PROVIDE UNIFORM SURFACE APPEARANCE.

PAYMENT FOR BRIDGE WING ARMORING WILL BE BID PER SQUARE YARD. COST WILL INCLUDE ENGINEERING FABRIC, MACADAM STONE, TREATED TIMBER EDGING, EXCAVATION, SHAPING, AND COMPACTION TO DIMENSIONS SHOWN IN THESE PLANS. BID ITEM SHALL BE "BRIDGE WING ARMORING - MACADAM STONE".

DESIGN FOR VARIABLE SKEW (L.A.)

2271'-6 x VARI. CONTINUOUS WELDED GIRDER BRIDGE-EBL W/14' BIKE TRAIL

138'-10 & 151'-0 7/8" END SPANS MULTIPLE LENGTH INTERIOR SPANS

WING ARMORING DETAILS-UNIT 4

STA. 6792+60.93 - 52' LEFT ℄ I-74 OCTOBER, 2015

SCOTT COUNTY

IOWA DEPARTMENT OF TRANSPORTATION - HIGHWAY DIVISION

DESIGN SHEET NO. 279 OF 282 FILE NO. 30253 DESIGN NO. 3408

DESIGN TEAM CF / LG / JP	SCOTT COUNTY	PROJECT NUMBER BRFIM-074-1(200)5--05-82	SHEET NUMBER 280

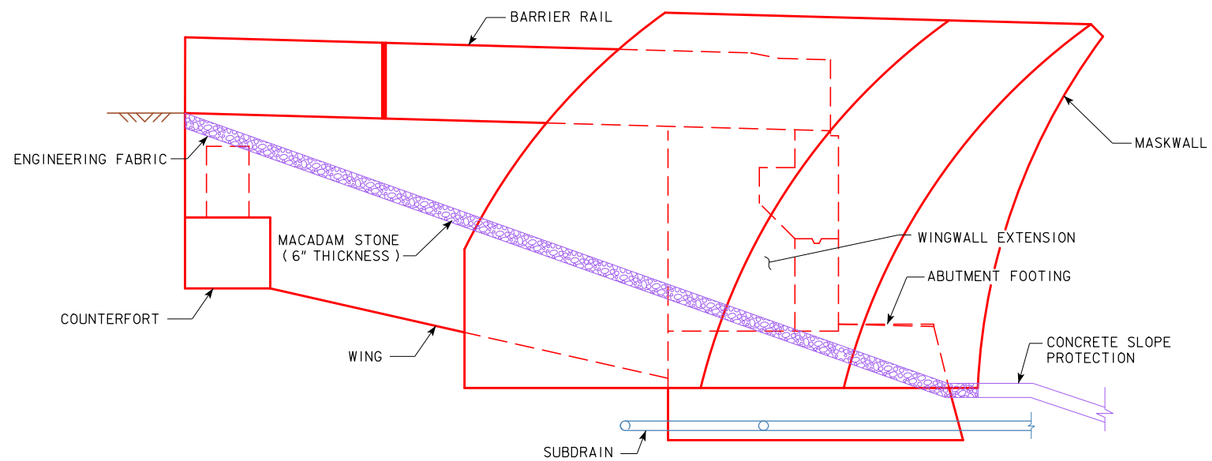

PROFILE VIEW OF WING ARMORING WITH WING EXTENSION

(STUB ABUTMENT WITH WING EXTENSIONS)

(WEST WING SHOWN)

DESIGN FOR VARIABLE SKEW (L.A.)

2271'-6 x VARI. CONTINUOUS WELDED GIRDER BRIDGE-EBL W/14' BIKE TRAIL

138'-10 & 151'-0 7/8 END SPANS MULTIPLE LENGTH INTERIOR SPANS

WING ARMORING DETAILS-UNIT 4

STA. 6792+60.93 - 52' LEFT ℄ I-74 OCTOBER, 2015

SCOTT COUNTY

IOWA DEPARTMENT OF TRANSPORTATION - HIGHWAY DIVISION

DESIGN SHEET NO. 280 OF 282 FILE NO. 30253 DESIGN NO. 3408

whks engineers + planners + land surveyors

REVISED 07-11 - THE LABELING OF THE BERM SLOPE IDENTIFIED AS 'GRADING SURFACE' WAS ADDED TO THE DETAILS.
ENGLISHFORESLOPEPROTECTIONBRIDGES.DGN 1005 - THIS SHEET ISSUED 06-02.

DESIGN TEAM CF / LG / JP	BRIDGE WING ARMORING CONCRETE OR MACADAM STONE SLOPE PROTECTION	STANDARD SHEET 1005 (MODIFIED)	SCOTT COUNTY	PROJECT NUMBER BRFIM-074-1(200)5--05-82	SHEET NUMBER 281

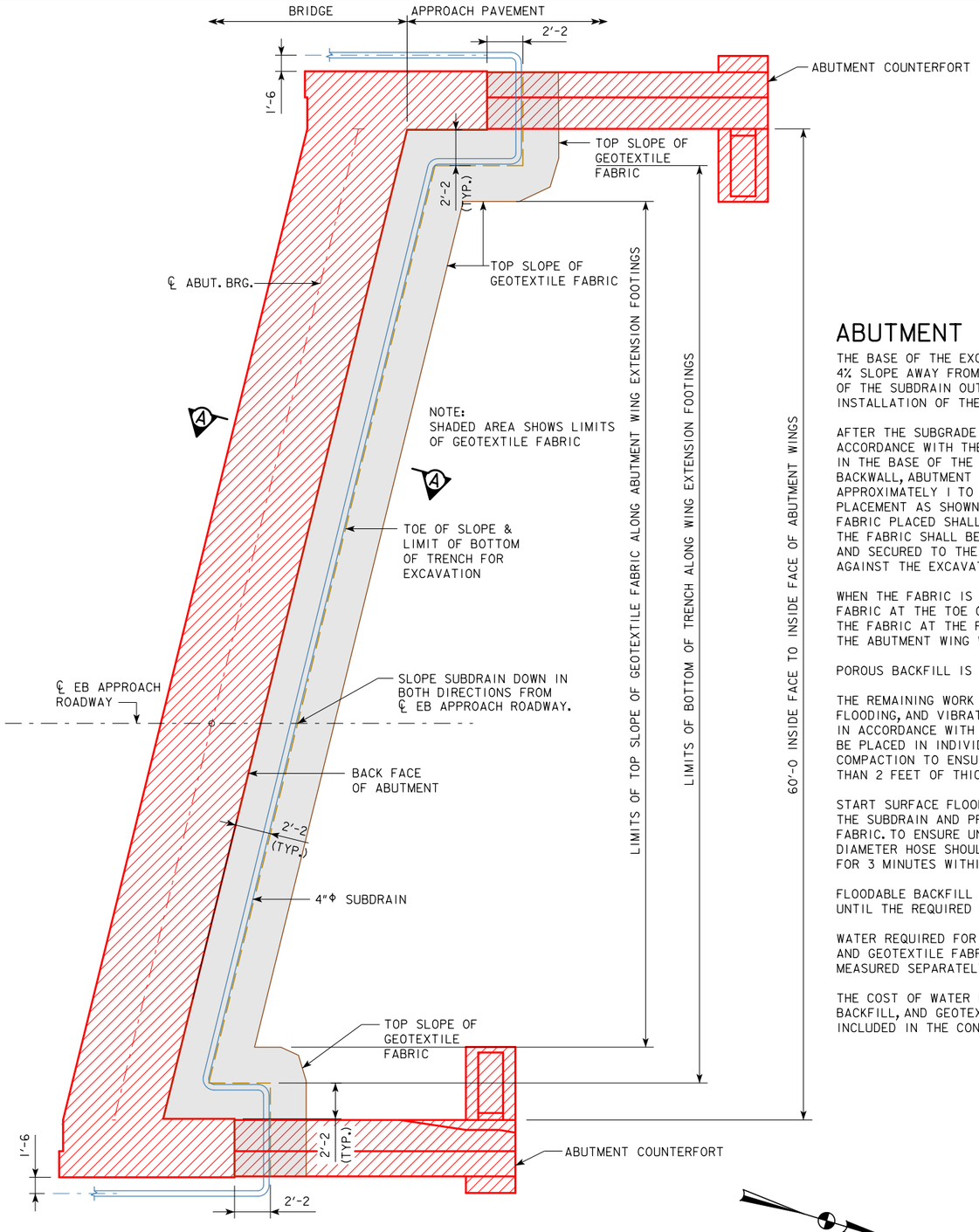

ABUTMENT PLAN WITH WING EXTENSIONS

TECHNICAL DATA INFORMATION - GEOTEXTILE FABRIC				
MECHANICAL PROPERTIES	TEST METHOD	UNIT	MINIMUM AVERAGE ROLL VALUE	
			MD	CD
TENSILE STRENGTH (AT 5% STRAIN)	ASTM D 4595	kN/m (LBS/FT)	19.8 (1356)	19.8 (1356)
APPARENT OPENING SIZE (AOS)	ASTM D 4751	mm (U.S. SIEVE)	0.43 MAX (#40)	
FLOW RATE	ASTM D 4491	$L/MIN/m^2$ ($GAL/MIN/FT^2$)	733 (18)	
UV RESISTANCE (AT 500 HOURS)	ASTM D 4355	% STRENGTH RETAINED	70	

ABUTMENT BACKFILL PROCESS:

THE BASE OF THE EXCAVATION SUBGRADE BEHIND THE ABUTMENT IS TO BE GRADED WITH A 4% SLOPE AWAY FROM THE ABUTMENT FOOTING AND A 2% CROSS SLOPE IN THE DIRECTION OF THE SUBDRAIN OUTLET. THIS EXCAVATION SHAPING IS TO BE DONE PRIOR TO BEGINNING INSTALLATION OF THE GEOTEXTILE AND BACKFILL MATERIAL.

AFTER THE SUBGRADE HAS BEEN SHAPED, THE GEOTEXTILE FABRIC SHALL BE INSTALLED IN ACCORDANCE WITH THE DETAILS SHOWN. THE FABRIC IS INTENDED TO BE INSTALLED IN THE BASE OF THE EXCAVATION AND EXTENDED VERTICALLY UP THE ABUTMENT BACKWALL, ABUTMENT WING WALLS, AND EXCAVATION FACE TO A HEIGHT THAT WILL BE APPROXIMATELY 1 TO 2 FOOT HIGHER THAN THE HEIGHT OF THE POROUS BACKFILL PLACEMENT AS SHOWN IN THE "BACKFILL DETAILS" ON THIS SHEET. THE STRIPS OF THE FABRIC PLACED SHALL OVERLAP APPROXIMATELY 1 FOOT AND SHALL BE PINNED IN PLACE. THE FABRIC SHALL BE ATTACHED TO THE ABUTMENT BY USING LATH FOLDED IN THE FABRIC AND SECURED TO THE CONCRETE WITH SHALLOW CONCRETE NAILS. THE FABRIC PLACED AGAINST THE EXCAVATION FACE SHALL BE PINNED.

WHEN THE FABRIC IS IN PLACE, THE SUBDRAIN SHALL BE INSTALLED DIRECTLY ON THE FABRIC AT THE TOE OF THE REAR EXCAVATION SLOPE. A SLOT WILL NEED TO BE CUT IN THE FABRIC AT THE POINT WHERE THE SUBDRAIN EXITS THE FABRIC NEAR THE END OF THE ABUTMENT WING WALL.

POROUS BACKFILL IS THEN PLACED AND LEVELED, NO COMPACTION IS REQUIRED.

THE REMAINING WORK INVOLVES BACKFILLING WITH FLOODABLE BACKFILL, SURFACE FLOODING, AND VIBRATORY COMPACTION. THE FLOODABLE BACKFILL MATERIAL SHALL BE IN ACCORDANCE WITH THE STANDARD SPECIFICATIONS. THE FLOODABLE BACKFILL SHALL BE PLACED IN INDIVIDUAL LIFTS, SURFACE FLOODED, AND COMPACTED WITH VIBRATORY COMPACTION TO ENSURE FULL CONSOLIDATION. LIMIT THE LOOSE LIFTS TO NO MORE THAN 2 FEET OF THICKNESS.

START SURFACE FLOODING FOR EACH FLOODABLE BACKFILL LIFT AT THE HIGH POINT OF THE SUBDRAIN AND PROGRESS TO THE LOW POINT WHERE THE SUBDRAIN EXITS THE FABRIC. TO ENSURE UNIFORM SURFACE FLOODING, WATER RUNNING FULL IN A 2-INCH DIAMETER HOSE SHOULD BE SPRAYED IN SUCCESSIVE 6-FOOT TO 8-FOOT INCREMENTS FOR 3 MINUTES WITHIN EACH INCREMENT.

FLOODABLE BACKFILL LIFT PLACEMENT, FLOODING, AND COMPACTION SHALL PROGRESS UNTIL THE REQUIRED FULL THICKNESS OF THE ABUTMENT BACKFILL HAS BEEN COMPLETED.

WATER REQUIRED FOR FLOODING, SUBDRAINS, POROUS BACKFILL, FLOODABLE BACKFILL, AND GEOTEXTILE FABRIC FURNISHED AT THE BRIDGE ABUTMENTS WILL NOT BE MEASURED SEPARATELY FOR PAYMENT.

THE COST OF WATER REQUIRED FOR FLOODING, SUBDRAINS, POROUS BACKFILL, FLOODABLE BACKFILL, AND GEOTEXTILE FABRIC FURNISHED AT THE BRIDGE ABUTMENTS SHALL BE INCLUDED IN THE CONTRACT UNIT PRICE BID FOR 'HIGH PERFORMANCE STRUCTURAL CONCRETE'.

NOTE:

SUBDRAIN SHALL SLOPE DOWNWARD 2% FROM ℄ APPROACH ROADWAY.

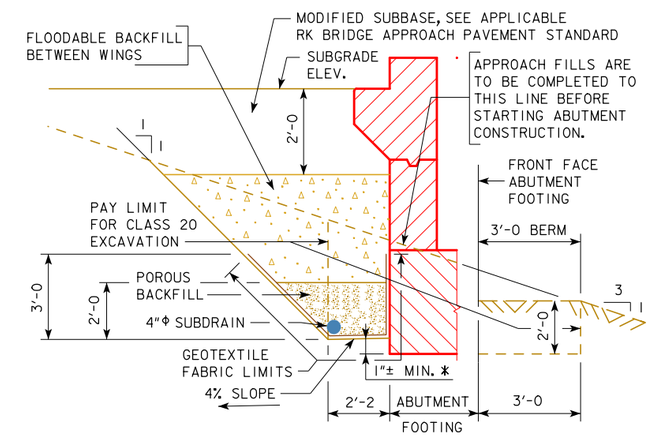

SECTION A-A

BACKFILL DETAILS

NOTE: GEOTEXTILE FABRIC WILL BE ATTACHED TO FACE OF ABUTMENT FOOTING AND WINGS.

* DIMENSION VARIES DUE TO 2% SUBDRAIN SLOPE.

NOTE:
SEE SUBDRAIN DETAILS SHEET FOR DETAILS NOT SHOWN ON THIS SHEET WHICH ARE PERTINENT TO THIS STRUCTURE.

whks
engineers + planners + land surveyors

DESIGN FOR VARIABLE SKEW (L.A.)

2271'-6 x VARI. CONTINUOUS WELDED GIRDER BRIDGE-EBL W/14' BIKE TRAIL

138'-10 & 151'-0 7/8 END SPANS MULTIPLE LENGTH INTERIOR SPANS

ABUTMENT BACKFILL - UNIT 4

STA. 6792+60.93 - 52' LEFT ℄ I-74 OCTOBER, 2015

SCOTT COUNTY

IOWA DEPARTMENT OF TRANSPORTATION - HIGHWAY DIVISION

DESIGN SHEET NO. 281 OF 282 FILE NO. 30253 DESIGN NO. 3408

REVISED 04-12 - EXCAVATION LIMIT ON THE FRONT FACE OF THE ABUTMENT WAS CHANGED TO A 3'-0 LIMIT. THE APPROACH FILL WAS IDENTIFIED AS THE GRADING SURFACE.
ENGLISHFORESLOPEPROTECTIONBRIDGES.DGN - 1007E - THIS SHEET ISSUED 08-07.

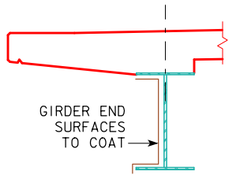

SECTION A-A

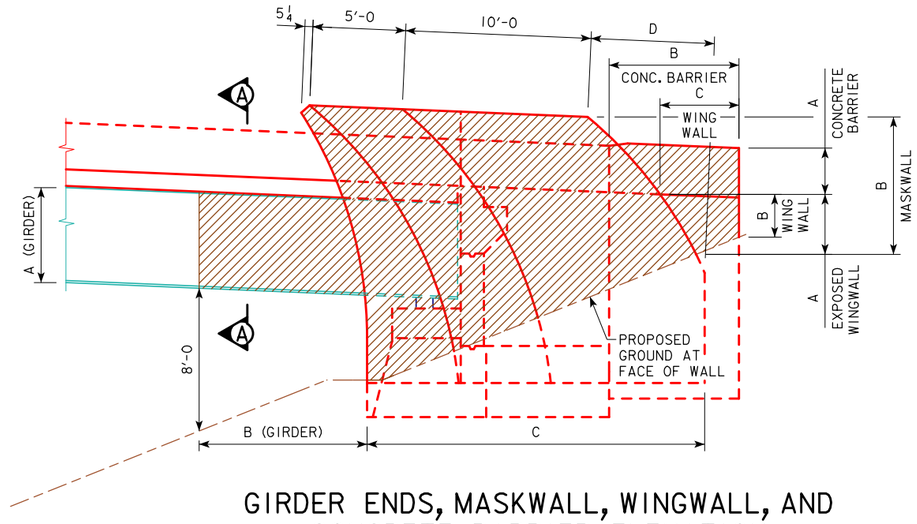

GIRDER ENDS, MASKWALL, WINGWALL, AND CONCRETE BARRIER ELEVATION

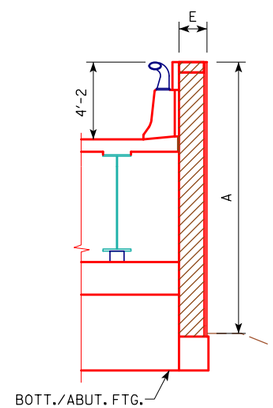

MASKWALL
END VIEW

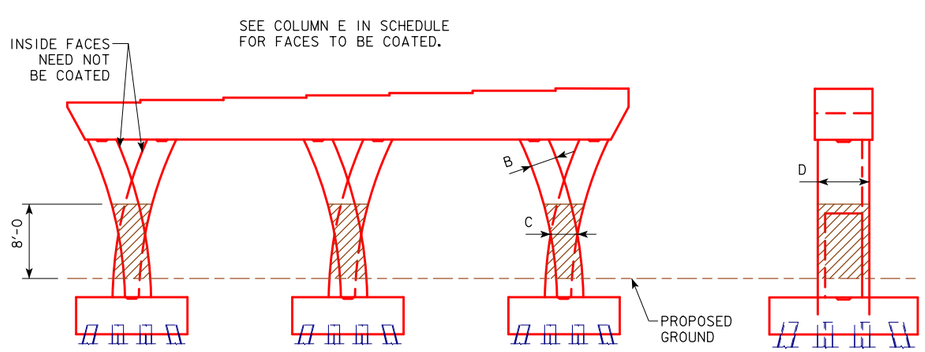

PIER COLUMNS ELEVATION

PIER COLUMN
END VIEW

ANTI-GRAFFITI COATING SCHEDULE

SURFACE TYPE	LOCATION	DIMENSIONS **					REFERENCE DESIGN SHEET NUMBER	QUANTITY (SY)
		A	B	C	D	E		
MASKWALL	EB VIADUCT NW	12'-9¼	7'-4 3/16	17'-6 11/16	6'-6⅞	1'-0¾	68 -72	21.9
	EB VIADUCT NE	12'-9⅝	7'-1 5/16	17'-5 3/16	6'-2⅝	1'-0¾	68 -72	21.1
WINGWALL, EXPOSED	EB VIADUCT NW	3'-5 9/16	0'-0	13'-1 13/16	--	--	68 -72	2.5
CONCRETE BARRIER	EB VIADUCT NW	2'-8	15'-8⅝	--	--	--	68 -72,212	4.3
PIER COLUMN	EB VIADUCT PIER 21	--	2'-10	2'-10 9/16	4'-2	N,E,W,*	39 -40	55.5
	EB VIADUCT PIER 22	--	2'-10	2'-10 9/16	4'-2	S,E,W,*	45,47, 49-50	31.7
	EB VIADUCT PIER 26	--	2'-10	2'-10 9/16	4'-2	N,E,W,*	45,48-50	35.6
	EB VIADUCT PIER 27	--	2'-10	2'-10 9/16	4'-2	S,E,W,*	45,48-50	35.6
	EB VIADUCT PIER 31	--	2'-10	2'-10 9/16	4'-2	N,E,W,*	45,48-50	35.6
GIRDER END	EB VIADUCT NW	5'-2¾	20'-0	--	--	--	91	14.8
	EB VIADUCT NE	5'-2¾	20'-0	--	--	--	91	14.8
							TOTAL (SY)	273.4

* PIER FACES TO BE COATED.

** TABULATED DIMENSIONS ARE APPROXIMATE.
PLAN QUANTITIES ARE CALCULATED GRAPHICALLY IN CADD.

ANTI-GRAFFITI COATING

NOTE:

ANTI-GRAFFITI SURFACE PREPARATION AND APPLICATION SHALL BE IN ACCORDANCE WITH THE "SPECIAL PROVISIONS FOR ANTI-GRAFFITI COATING". THE MATERIAL USED SHALL BE AN APPROVED TYPE IN ACCORDANCE WITH MATERIALS I.M. 491.23. ANTI-GRAFFITI COATING SHALL BE APPLIED TO SURFACES LISTED IN THE SCHEDULE AND TO THE LIMITS INDICATED IN THESE PLANS.

whks
engineers + planners + land surveyors

DESIGN FOR VARIABLE SKEW (L.A.)

2271'-6 x VARI. CONTINUOUS WELDED GIRDER BRIDGE-EBL W/14' BIKE TRAIL

138'-10 & 151'-0⅞ END SPANS MULTIPLE LENGTH INTERIOR SPANS

ANTI-GRAFFITI COATING

STA. 6792+60.93 - 52' LEFT ℄ I-74 OCTOBER, 2015

SCOTT COUNTY

IOWA DEPARTMENT OF TRANSPORTATION - HIGHWAY DIVISION

DESIGN SHEET NO. 282 OF 282 FILE NO. 30253 DESIGN NO. 3408

DESIGN FOR VARIABLE SKEW (L.A.)

2271'-6 x VARI. CONTINUOUS WELDED GIRDER BRIDGE-EBL W/14' BIKE TRAIL

138'-10 & 151'-0 7/8 END SPANS MULTIPLE LENGTH INTERIOR SPANS

SOIL PROFILE SHEET - UNIT 1

STA. 6792+60.93 - 52' LEFT ℄ I-74 OCTOBER, 2015

SCOTT COUNTY

IOWA DEPARTMENT OF TRANSPORTATION - HIGHWAY DIVISION

DESIGN SHEET NO. 1 OF 6 FILE NO. 30253 DESIGN NO. 3408

GEOTECHNICAL DESIGN

LICENSED PROFESSIONAL ENGINEER Kipkoech K. Chepkoit 18405 IOWA

I hereby certify that this engineering document was prepared by me or under my direct personal supervision and that I am a duly licensed Professional Engineer under the laws of the State of Iowa.

Signature Date

Kipkoech K. Chepkoit

Printed or Typed Name

My license renewal date is December 31, 2016

Pages or sheets covered by this seal: SPS. 1 – SPS. 6

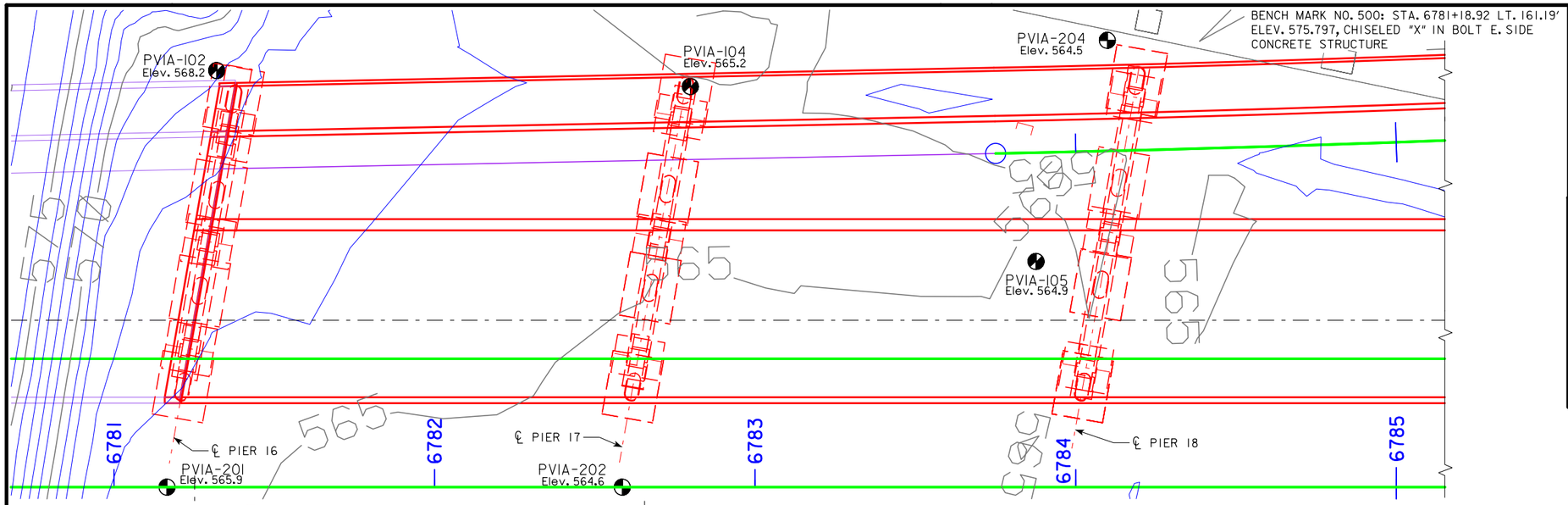

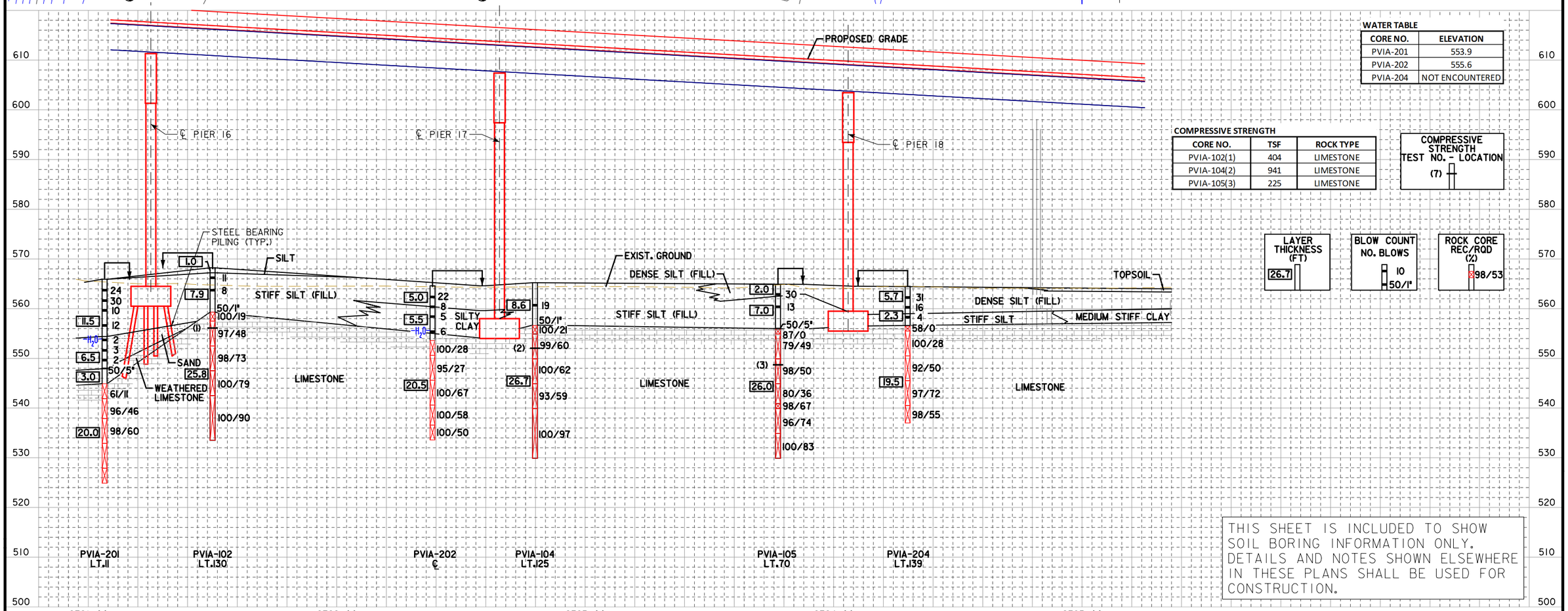

WATER TABLE

CORE NO.	ELEVATION
PVIA-201	553.9
PVIA-202	555.6
PVIA-204	NOT ENCOUNTERED

COMPRESSIVE STRENGTH

CORE NO.	TSF	ROCK TYPE
PVIA-102(1)	404	LIMESTONE
PVIA-104(2)	941	LIMESTONE
PVIA-105(3)	225	LIMESTONE

COMPRESSIVE STRENGTH TEST NO. - LOCATION (7)

LAYER THICKNESS (FT) 26.7

BLOW COUNT NO. BLOWS 10 50/1"

ROCK CORE REC/RQD (%) 98/53

THIS SHEET IS INCLUDED TO SHOW SOIL BORING INFORMATION ONLY. DETAILS AND NOTES SHOWN ELSEWHERE IN THESE PLANS SHALL BE USED FOR CONSTRUCTION.

DESIGN FOR VARIABLE SKEW (L.A.)

2271'-6 x VARI. CONTINUOUS WELDED GIRDER BRIDGE-EBL W/14' BIKE TRAIL

138'-10 & 151'-0 7/8 END SPANS MULTIPLE LENGTH INTERIOR SPANS

SOIL PROFILE SHEET - UNIT 1

STA. 6792+60.93 - 52' LEFT ℄ I-74 OCTOBER, 2015

SCOTT COUNTY

IOWA DEPARTMENT OF TRANSPORTATION - HIGHWAY DIVISION

DESIGN SHEET NO. 2 OF 6 FILE NO. 30253 DESIGN NO. 3408

THIS SHEET IS INCLUDED TO SHOW SOIL BORING INFORMATION ONLY. DETAILS AND NOTES SHOWN ELSEWHERE IN THESE PLANS SHALL BE USED FOR CONSTRUCTION.

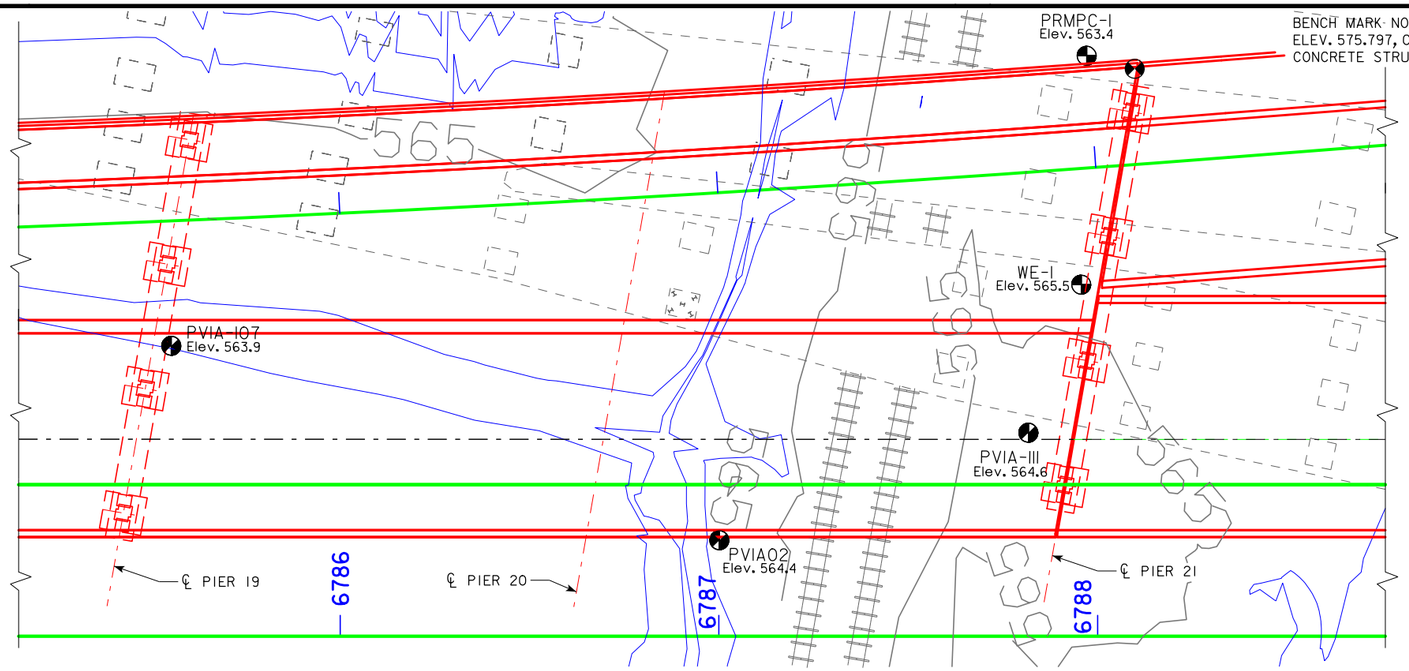

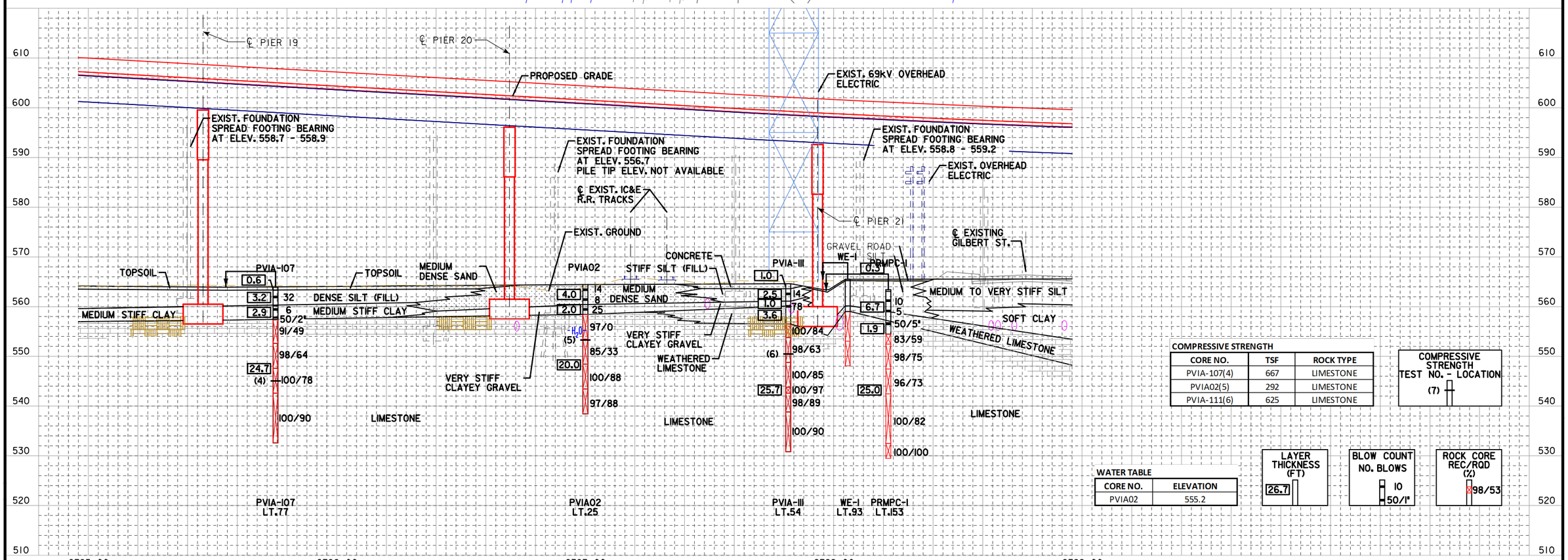

COMPRESSIVE STRENGTH

CORE NO.	TSF	ROCK TYPE
PVIA-107(4)	667	LIMESTONE
PVIA02(5)	292	LIMESTONE
PVIA-111(6)	625	LIMESTONE

COMPRESSIVE STRENGTH TEST NO. - LOCATION (7)

WATER TABLE

CORE NO.	ELEVATION
PVIA02	555.2

LAYER THICKNESS (FT) 26.7

BLOW COUNT NO. BLOWS 10 50/1"

ROCK CORE REC/RQD (%) 98/53

DESIGN FOR VARIABLE SKEW (L.A.)

2271'-6 x VARI. CONTINUOUS WELDED GIRDER BRIDGE-EBL W/14' BIKE TRAIL

138'-10 & 151'-0 7/8 END SPANS MULTIPLE LENGTH INTERIOR SPANS

SOIL PROFILE SHEET - UNIT 2

STA. 6792+60.93 - 52' LEFT ℄ I-74 OCTOBER, 2015

SCOTT COUNTY

IOWA DEPARTMENT OF TRANSPORTATION - HIGHWAY DIVISION

DESIGN SHEET NO. 3 OF 6 FILE NO. 30253 DESIGN NO. 3408

THIS SHEET IS INCLUDED TO SHOW SOIL BORING INFORMATION ONLY. DETAILS AND NOTES SHOWN ELSEWHERE IN THESE PLANS SHALL BE USED FOR CONSTRUCTION.

BENCH MARK NO. 500: STA. 6781+18.92 LT. 161.19'
ELEV. 575.797, CHISELED "X" IN BOLT E. SIDE CONCRETE STRUCTURE

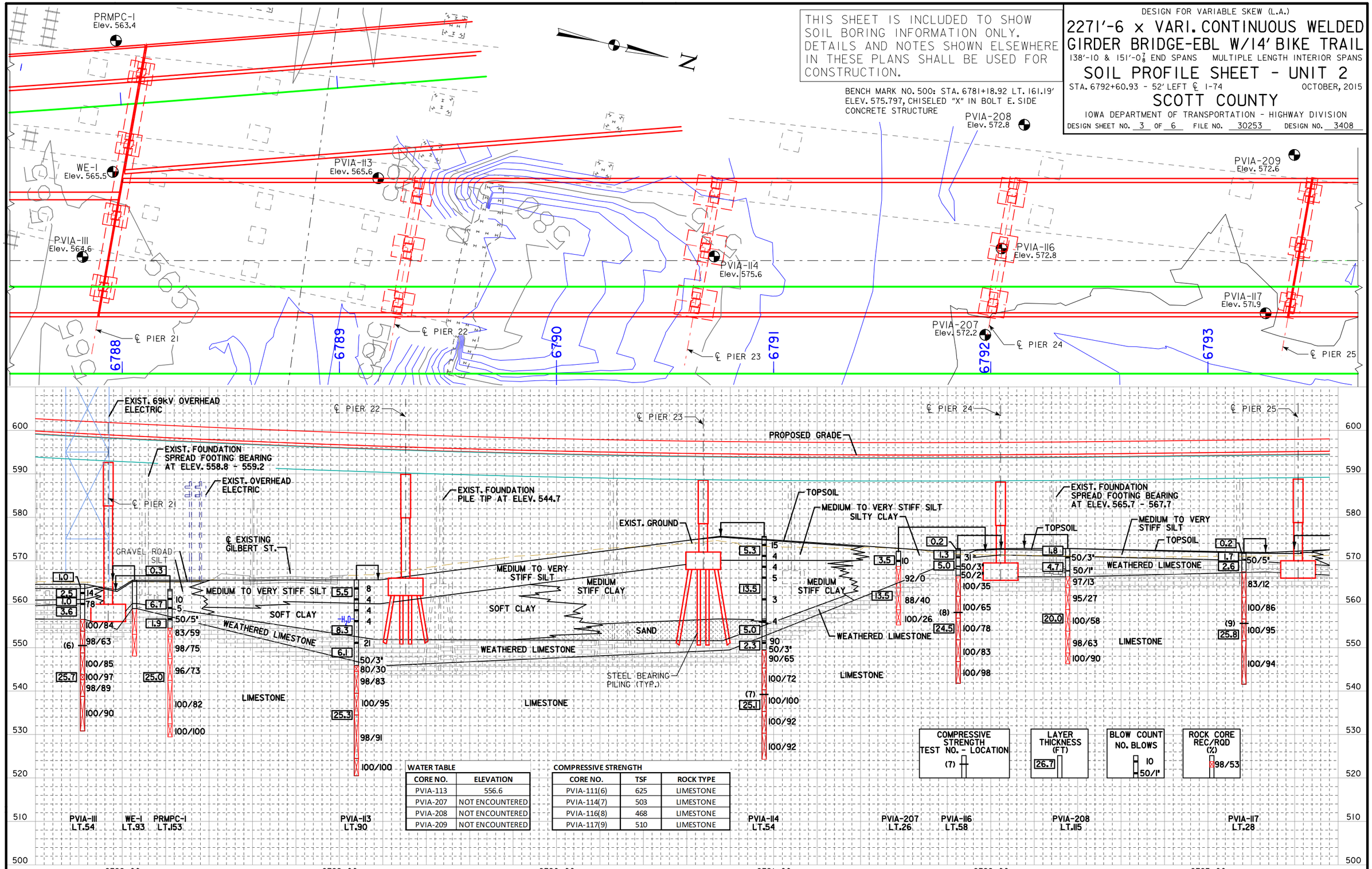

WATER TABLE

CORE NO.	ELEVATION
PVIA-113	556.6
PVIA-207	NOT ENCOUNTERED
PVIA-208	NOT ENCOUNTERED
PVIA-209	NOT ENCOUNTERED

COMPRESSIVE STRENGTH

CORE NO.	TSF	ROCK TYPE
PVIA-111(6)	625	LIMESTONE
PVIA-114(7)	503	LIMESTONE
PVIA-116(8)	468	LIMESTONE
PVIA-117(9)	510	LIMESTONE

THIS SHEET IS INCLUDED TO SHOW SOIL BORING INFORMATION ONLY. DETAILS AND NOTES SHOWN ELSEWHERE IN THESE PLANS SHALL BE USED FOR CONSTRUCTION.

BENCH MARK NO. 500: STA. 6781+18.92 LT. 161.19' ELEV. 575.797, CHISELED "X" IN BOLT E. SIDE CONCRETE STRUCTURE

DESIGN FOR VARIABLE SKEW (L.A.)

2271'-6 x VARI. CONTINUOUS WELDED GIRDER BRIDGE-EBL W/14' BIKE TRAIL

138'-10 & 151'-0 7/8 END SPANS MULTIPLE LENGTH INTERIOR SPANS

SOIL PROFILE SHEET - UNIT 3

STA. 6792+60.93 - 52' LEFT ℄ I-74 OCTOBER, 2015

SCOTT COUNTY

IOWA DEPARTMENT OF TRANSPORTATION - HIGHWAY DIVISION

DESIGN SHEET NO. 4 OF 6 FILE NO. 30253 DESIGN NO. 3408

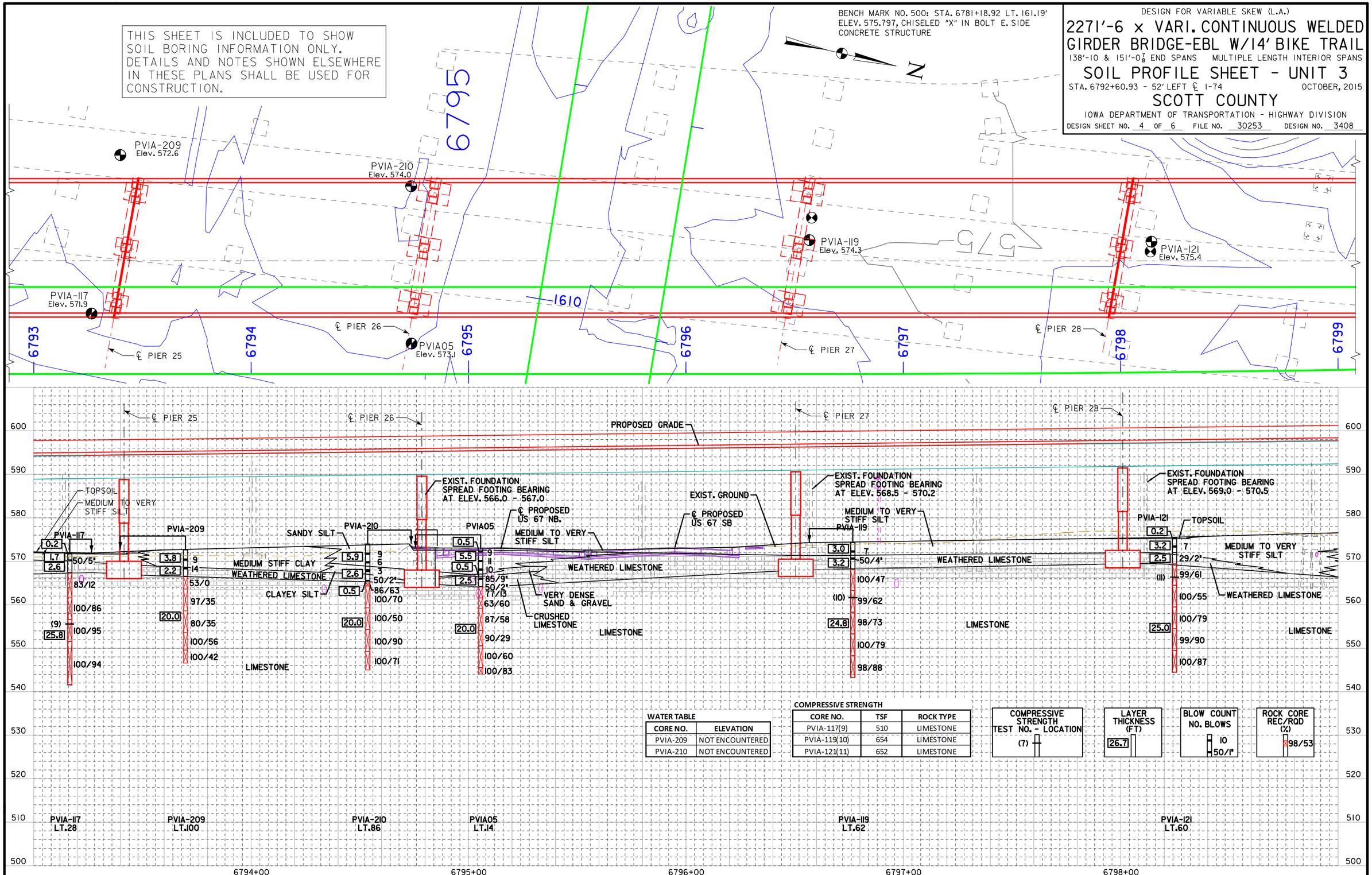

WATER TABLE

CORE NO.	ELEVATION
PVIA-209	NOT ENCOUNTERED
PVIA-210	NOT ENCOUNTERED

COMPRESSIVE STRENGTH

CORE NO.	TSF	ROCK TYPE
PVIA-117(9)	510	LIMESTONE
PVIA-119(10)	654	LIMESTONE
PVIA-121(11)	652	LIMESTONE

COMPRESSIVE STRENGTH TEST NO. - LOCATION (7)

LAYER THICKNESS (FT) 26.7

BLOW COUNT NO. BLOWS 10 50/1"

ROCK CORE REC/RQD (%) 98/53

DESIGN TEAM KKC/SAS/KKC (HANSON) SCOTT COUNTY PROJECT NUMBER BRFIM-074-1(200)5--05-82 SHEET NUMBER SPS.4

DESIGN FOR VARIABLE SKEW (L.A.)

2271'-6 x VARI. CONTINUOUS WELDED GIRDER BRIDGE-EBL W/14' BIKE TRAIL

138'-10 & 151'-0 7/8 END SPANS MULTIPLE LENGTH INTERIOR SPANS

SOIL PROFILE SHEET - UNIT 4

STA. 6792+60.93 - 52' LEFT ℄ I-74 OCTOBER, 2015

SCOTT COUNTY

IOWA DEPARTMENT OF TRANSPORTATION - HIGHWAY DIVISION

DESIGN SHEET NO. 5 OF 6 FILE NO. 30253 DESIGN NO. 3408

BENCH MARK NO. 500: STA. 6781+18.92 LT. 161.19'
ELEV. 575.797, CHISELED "X" IN BOLT E. SIDE
CONCRETE STRUCTURE

THIS SHEET IS INCLUDED TO SHOW SOIL BORING INFORMATION ONLY. DETAILS AND NOTES SHOWN ELSEWHERE IN THESE PLANS SHALL BE USED FOR CONSTRUCTION.

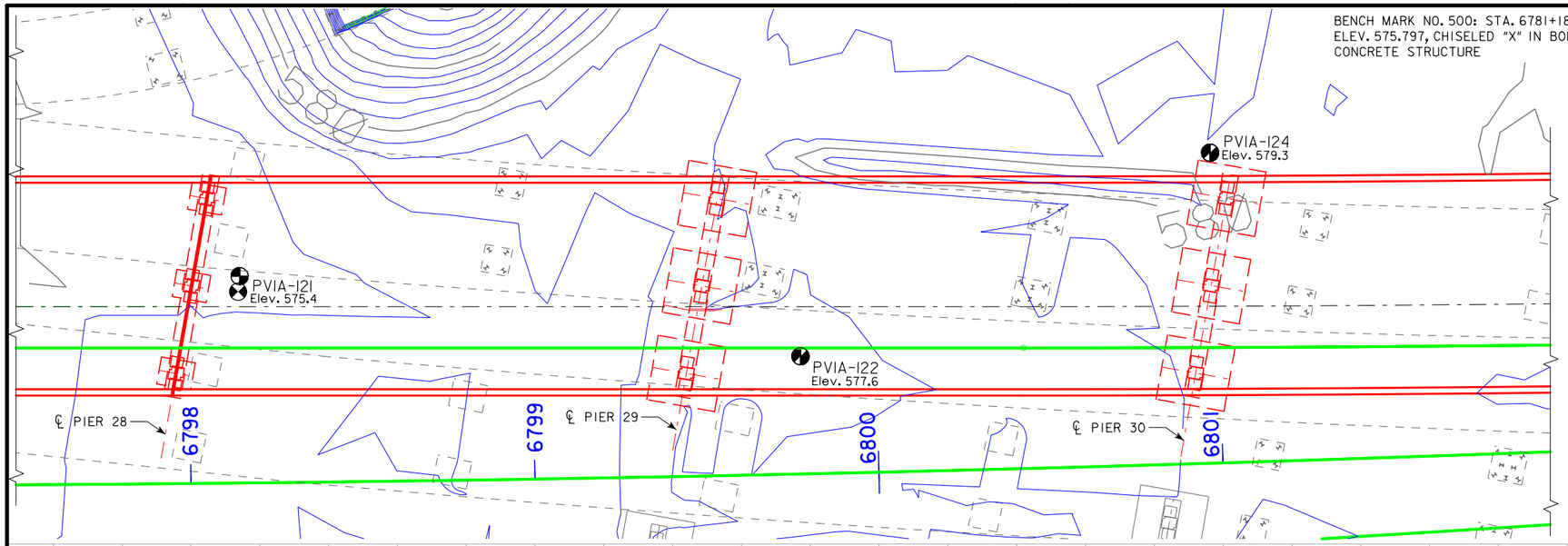

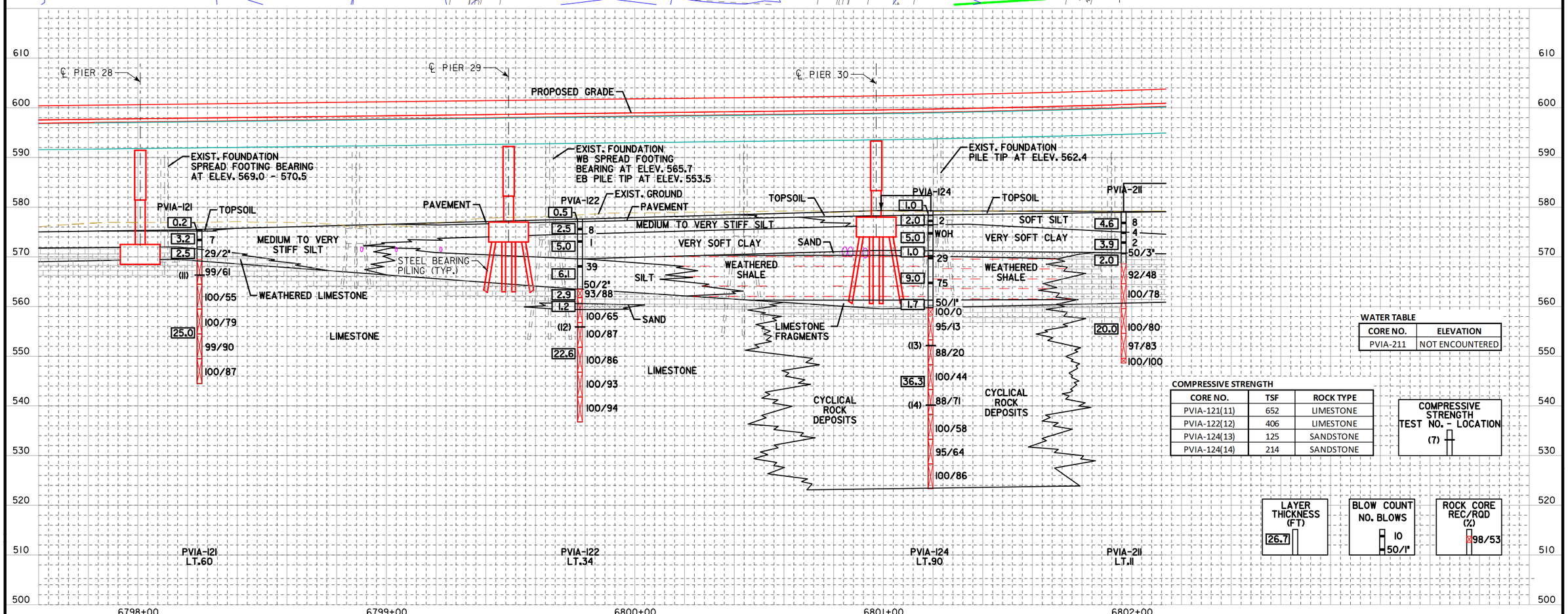

WATER TABLE

CORE NO.	ELEVATION
PVIA-211	NOT ENCOUNTERED

COMPRESSIVE STRENGTH

CORE NO.	TSF	ROCK TYPE
PVIA-121(11)	652	LIMESTONE
PVIA-122(12)	406	LIMESTONE
PVIA-124(13)	125	SANDSTONE
PVIA-124(14)	214	SANDSTONE

COMPRESSIVE STRENGTH TEST NO. - LOCATION (7)

LAYER THICKNESS (FT) 26.7

BLOW COUNT NO. BLOWS 10 50/1"

ROCK CORE REC/RQD (%) 98/53

BENCH MARK NO. 500: STA. 6781+18.92 LT. 161.19'
ELEV. 575.797, CHISELED "X" IN BOLT E. SIDE
CONCRETE STRUCTURE

DESIGN FOR VARIABLE SKEW (L.A.)

2271'-6 x VARI. CONTINUOUS WELDED GIRDER BRIDGE-EBL W/14' BIKE TRAIL

138'-10 & 151'-0 7/8 END SPANS MULTIPLE LENGTH INTERIOR SPANS

SOIL PROFILE SHEET - UNIT 4

STA. 6792+60.93 - 52' LEFT ℄ I-74 OCTOBER, 2015

SCOTT COUNTY

IOWA DEPARTMENT OF TRANSPORTATION - HIGHWAY DIVISION

DESIGN SHEET NO. 6 OF 6 FILE NO. 30253 DESIGN NO. 3408

THIS SHEET IS INCLUDED TO SHOW SOIL BORING INFORMATION ONLY. DETAILS AND NOTES SHOWN ELSEWHERE IN THESE PLANS SHALL BE USED FOR CONSTRUCTION.

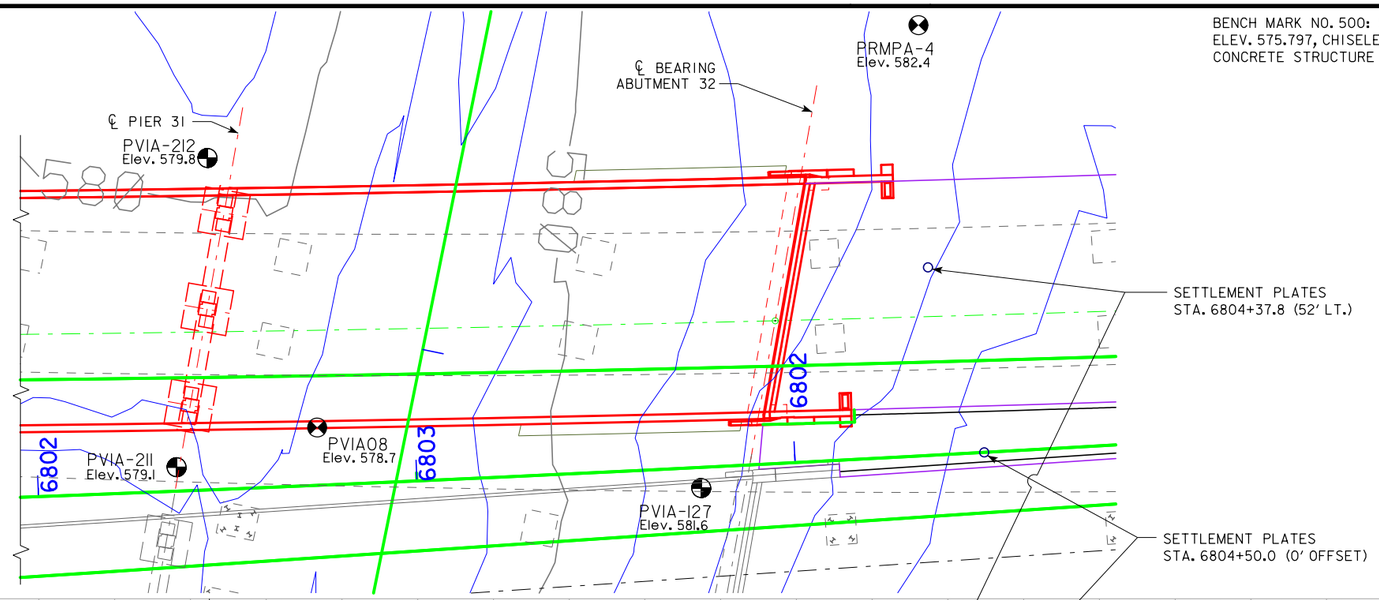

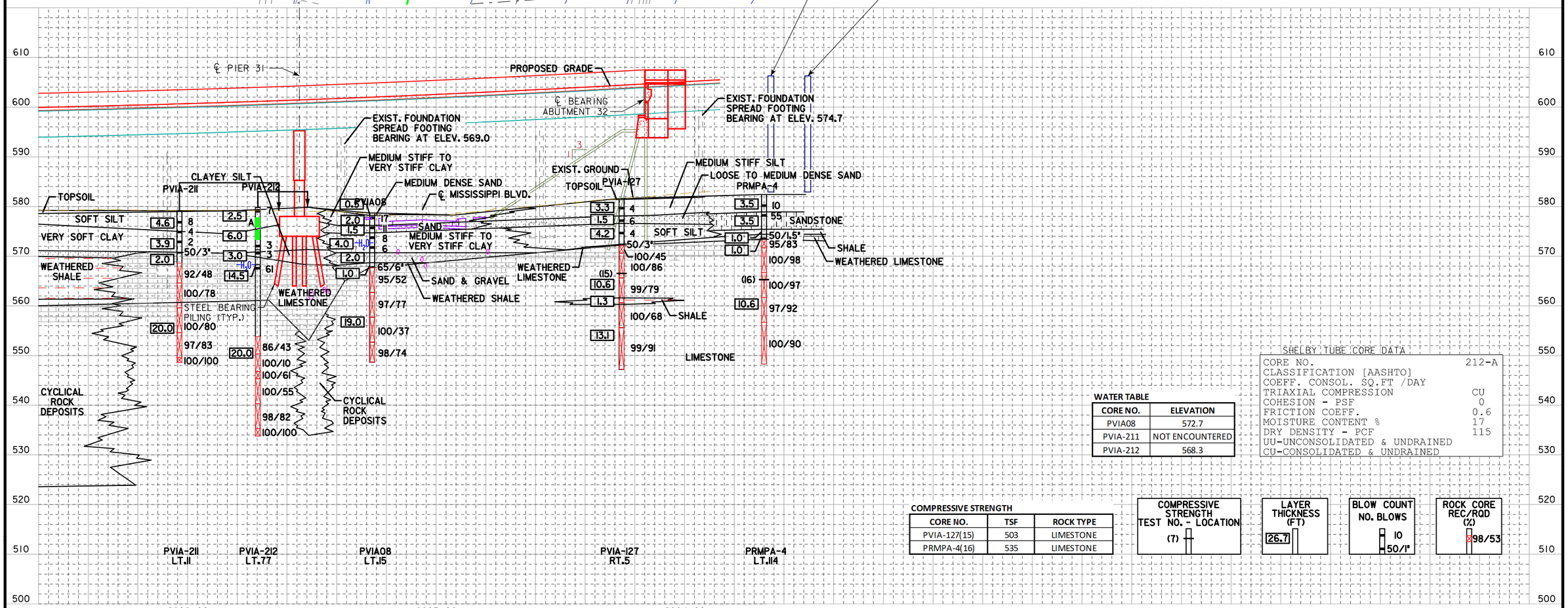

WATER TABLE

CORE NO.	ELEVATION
PVIA08	572.7
PVIA-211	NOT ENCOUNTERED
PVIA-212	568.3

SHELBY TUBE CORE DATA

CORE NO.	212-A
CLASSIFICATION [AASHTO]	
COEFF. CONSOL. SQ.FT /DAY	
TRIAXIAL COMPRESSION	CU
COHESION - PSF	0
FRICTION COEFF.	0.6
MOISTURE CONTENT %	17
DRY DENSITY - PCF	115

UU-UNCONSOLIDATED & UNDRAINED
CU-CONSOLIDATED & UNDRAINED

COMPRESSIVE STRENGTH

CORE NO.	TSF	ROCK TYPE
PVIA-127(15)	503	LIMESTONE
PRMPA-4(16)	535	LIMESTONE

COMPRESSIVE STRENGTH TEST NO. - LOCATION (7)

LAYER THICKNESS (FT) 26.7

BLOW COUNT NO. BLOWS 10 50/1"

ROCK CORE REC/RQD (%) 98/53

ESTIMATED BRIDGE QUANTITIES

ITEM NO.	ITEM CODE	ITEM	UNIT	TOTAL	AS BUILT QUANTITY
1	2402-2720000	EXCAVATION, CLASS 20	CY	241	
2	2403-0100010	STRUCTURAL CONCRETE (BRIDGE)	CY	56.5	
3	2403-7000210	HIGH PERFORMANCE STRUCTURAL CONCRETE	CY	609.9	
4	2404-7775000	REINFORCING STEEL	LB	2786	
5	2404-7775005	REINFORCING STEEL, EPOXY COATED	LB	189088	
6	2404-7775009	REINFORCING STEEL, STAINLESS STEEL	LB	6969	
7	2408-7800000	STRUCTURAL STEEL	LB	452196	
8	2413-1200000	STEEL EXTRUSION JOINT WITH NEOPRENE	LF	60.3	
9	2413-1200100	NEOPRENE GLAND INSTALLATION AND TESTING	LF	60.3	
10	2414-6424110	CONCRETE BARRIER RAILING	LF	577.1	
11	2414-6625502	STRUCTURAL STEEL RAILING, TRAFFIC	LF	286.5	
12	2414-6772010	CONCRETE PARAPET, FENCE	LF	295.6	
13	2434-0000100	DISC BEARING ASSEMBLIES	EACH	21	
14	2499-2300001	DECK DRAINS	LS	1.0	
15	2501-0201473	PILES, STEEL, HP 14 X 73	LF	785	
16	2507-2638610	CONCRETE SLOPE PROTECTION	SY	166	
17	2507-2638660	BRIDGE WING ARMORING-MACADAM STONE	SY	14.0	
18	2526-8285000	CONSTRUCTION SURVEY	LS	1.0	
19	2533-4980005	MOBILIZATION	LS	1.0	
20	2599-9999003	HP SELF-CONSOLIDATING CONCRETE (HP-SCC)	CY	32.0	
21	2599-9999008	STRUCTURAL STEEL (GRADE HPS 70W)	LB	68358	
22	2599-9999009	FENCE, PERFORATED ALUMINUM	LF	294.0	
23	2599-9999009	STRUCTURAL STEEL RAILING, TRAFFIC+BICYCLE	LF	280.0	
24	2599-9999010	TRIAL BATCH HP SELF-CONSOLIDATING CONCRETE (HP-SCC)	LS	1.0	
25	2599-9999018	ANTI-GRAFFITI COATING	SY	101	

ROADWAY QUANTITIES SHOWN ELSEWHERE IN THESE PLANS.

DESIGN HISTORY AT THIS SITE

DESIGN NO.	TYPE OF WORK
DES. NO.'S 568, 2070, 173	BETTENDORF APPROACHES CONSTRUCTION.
DES. NO. 601	BUSHING REPLACEMENT REPAIRS.
DES. NO. 684	EASTBOUND APPROACH BRIDGE REPAIRS.
DES. NO. 784	WESTBOUND APPROACH BRIDGE REPAIRS.
DES. NO. 306, 406	GIRDER COLLISION REPAIR.

SHOP DRAWING SUBMITTALS

SHOP DRAWINGS SHALL BE SUBMITTED FOR THE FOLLOWING ITEMS SHOWN IN THE TABLE BELOW. (NOTE ADDITIONAL SHOP DRAWINGS MAY BE REQUIRED IN ACCORDANCE WITH ARTICLE 1105.03 OF THE STANDARD SPECIFICATIONS.)

SUBMITTAL REQUIREMENTS FOR SHOP DRAWINGS SHOULD BE IN ACCORDANCE WITH 1105.03 OF THE STANDARD SPECIFICATIONS FOR HIGHWAY AND BRIDGE CONSTRUCTION OF THE IOWA DEPARTMENT OF TRANSPORTATION.

1	STRUCTURAL STEEL
2	ERECTION PLANS
3	STEEL EXTRUSION JOINTS
4	HLMR DISC BEARINGS
5	AESTHETIC ROADWAY BARRIER
6	AESTHETIC SEPARATION BARRIER
7	FENCE, PERFORATED ALUMINUM

INDEX OF SHEETS

SHEET DESCRIPTIONS	SHEET NUMBER
ESTIMATED QUANTITIES	284
GENERAL NOTES	285
SITUATION PLAN	286
STAKING DIAGRAM	287
PIER DETAILS	288
ABUTMENT DETAILS	292
SUPERSTRUCTURE DETAILS	302
DISC BEARING DETAILS	314
SLAB REINFORCING DETAILS	316
BARRIER RAILING DETAILS	323
LIGHTING DETAILS	334
EXPANSION JOINT DETAILS	337
DECK DRAIN LAYOUT	340
SUBDRAIN DETAILS	343
SLOPE PROTECTION	344
BRIDGE WING ARMORING	345
ABUTMENT BACKFILL DETAILS	346
ANTI-GRAFFITI COATING	347
SOIL PROFILE SHEETS	SPS.7

ESTIMATED REFERENCE INFORMATION

ITEM NO.	DESCRIPTION
2	INCLUDES THE CONCRETE FOR THE PIER CAP, FOOTING AND WINGWALLS.
	INCLUDES 66 FT OF 1" DIA. RIGID STEEL GALVANIZED CONDUIT. INCLUDES MATERIAL AND LABOR ASSOCIATED WITH PROVIDING AND INSTALLING RIGID STEEL CONDUIT, JUNCTION BOXES, AND FITTINGS.
	ALL PIER FOOTING CONCRETE SHALL BE CLASS "C".
3	INCLUDES THE CONCRETE FOR THE DECK SLAB, ABUTMENT 23C, AND MASKWALLS.
	INCLUDES 46 FT OF 1" DIA. RIGID STEEL GALVANIZED CONDUIT. INCLUDES MATERIAL AND LABOR ASSOCIATED WITH PROVIDING AND INSTALLING RIGID STEEL CONDUIT, JUNCTION BOXES, AND FITTINGS.
	INCLUDES FURNISHING AND PLACING SUBDRAIN (INCLUDING EXCAVATION), FLOODABLE BACKFILL, POROUS BACKFILL, GEOTEXTILE FABRIC, WATER FLOODING AND SUBDRAIN OUTLET AT ABUTMENT 23C AND TOE OF BERM.
	INCLUDES FURNISHING AND PLACING 3 INCH DIAMETER PVC PLASTIC PIPE AND EXPANDING FOAM IN THE ABUTMENT WINGS AND MASKWALLS.
	INCLUDES ALL PREFORMED EXPANSION JOINT FILLER REQUIRED.
	INCLUDES FURNISHING AND PLACING CONCRETE SEALER AT ABUTMENT 23C.
	REFER TO THE DEVELOPMENTAL SPECIFICATIONS FOR "HIGH PERFORMANCE CONCRETE FOR STRUCTURES" FOR ADDITIONAL INFORMATION.
4	INCLUDES 24 STAINLESS STEEL COUPLING NUTS FOR THREADED NO. 5 REBAR.
6	ALL VERTICAL BARRIER RAIL REINFORCING STEEL WHICH EXTENDS FROM THE DECK OR THE ABUTMENT WINGWALLS & ALL HORIZONTAL REINFORCING STEEL THAT CONNECTS THE MASKWALL TO OTHER STRUCTURAL ELEMENTS SHALL BE DEFORMED BAR GRADE 60, TYPE 304, 316L OR 316LN IN ACCORDANCE WITH ASTM A955/A955M-11. STAINLESS STEEL REINFORCING BARS AND COUPLING NUTS SHALL MEET THE REQUIREMENTS OF MATERIALS IM 451 APPENDIX E, EXCEPT THAT THE BAR AND COUPLING NUT MATERIAL SHALL BE TYPE 304, 316L OR 316LN, IN ACCORDANCE WITH ASTM A955/M955-11.
7	INCLUDES ALL COSTS ASSOCIATED WITH FLUOROPOLYMER PAINT SYSTEM IN ACCORDANCE WITH THE SPECIAL PROVISIONS FOR "FLUOROPOLYMER PAINT FOR STRUCTURAL STEEL".
8	INCLUDES ALL NECESSARY HARDWARE AND ACCESSORIES INCLUDING THE ANCHORAGE SYSTEM, TEMPORARY ERECTION MATERIAL, $\frac{1}{2}$" COVER PLATES, AND THE $\frac{3}{8}$" BARRIER PLATES WITH THEIR ANCHORAGE SYSTEM. EXCLUDES INSTALLATION OF NEOPRENE GLAND.
9	INCLUDES INSTALLATION OF NEOPRENE GLAND AND WATER TESTING OF JOINT.
10	IF PLACEMENT OF CONCRETE IS DONE BY THE SLIPFORMING METHOD, CLASS BR CONCRETE IS REQUIRED. CAST-IN-PLACE BARRIER RAILS SHALL USE HIGH PERFORMANCE CONCRETE. PRICE BID FOR THIS ITEM SHALL INCLUDE THE COST OF CAST-IN-PLACE FORMS IF REQUIRED FOR PLACEMENT OF THE CONCRETE.
	INCLUDES 704 FT OF 2" DIA. RIGID STEEL GALVANIZED CONDUIT. INCLUDES MATERIAL AND LABOR ASSOCIATED WITH PROVIDING AND INSTALLING RIGID STEEL CONDUIT, JUNCTION BOXES, AND FITTINGS.
11, 21	REFER TO THE DEVELOPMENTAL SPECIFICATIONS FOR "INSTALLING ADHESIVE-BONDED ANCHORS AND DOWELS FOR TRAFFIC RAILINGS" FOR ADDITIONAL INFORMATION.
12	INCLUDES 1.0 C.Y. OF CONCRETE FOR THE LIGHT POLE BLISTERS.
	INCLUDES ANCHOR BOLTS AND PLATES AT LIGHT POLE BASES.
13	INCLUDES DISC BEARING, SOLE PLATE, GUIDE BARS, SLIDER PLATE, MASONRY PLATE, $\frac{1}{8}$" PREFORMED MASONRY PADS, AND ANCHOR BOLTS.
14	INCLUDES ALL NEW DECK DRAINS. REFER TO DESIGN SHEETS 57 THROUGH 59 FOR LOCATION, MATERIALS AND THE DETAILS OF THEIR CONSTRUCTION. MEASUREMENT WILL BE THE LUMP SUM FOR ALL DECK DRAINS REQUIRED AS SPECIFIED IN THE PLANS. THE PAYMENT SHALL BE FULL COMPENSATION FOR FURNISHING ALL MATERIAL, EQUIPMENT AND LABOR AND FOR PERFORMANCE OF ALL WORK NECESSARY FOR FABRICATING AND INSTALLING THE DECK DRAINS AS PER PLAN.
	INCLUDES SPLASH BASINS.
15	INCLUDES FURNISHING AND INSTALLING STEEL PILE POINTS AT PIER 22C & ABUTMENT 23C.
16	INCLUDES FURNISHING AND PLACING ENGINEERING FABRIC, GRANULAR SUBBASE, REINFORCING STEEL, STRUCTURAL CONCRETE, PREFORMED EXPANSION JOINT FILLER AND ALL REQUIRED EXCAVATING, SHAPING AND COMPACTING.
17	INCLUDES FURNISHING AND PLACING ENGINEERING FABRIC, MACADAM STONE, 4" x 6" TREATED TIMBERS, $\frac{1}{2}$" DIAMETER STEEL PINS (OR REBARS), AND ALL REQUIRED EXCAVATING, SHAPING, AND COMPACTING FOR WING ARMORING.
20	INCLUDES CONCRETE FOR PIER 22C COLUMN.
21	INCLUDES ALL COSTS ASSOCIATED WITH THE FLUOROPOLYMER PAINT SYSTEM APPLIED TO HPS 70W STEEL IN ACCORDANCE WITH THE "SPECIAL PROVISIONS FOR FLUOROPOLYMER PAINT FOR STRUCTURAL STEEL".
23	REFER TO THE DEVELOPMENTAL SPECIFICATION "INSTALLING ADHESIVE-BONDED ANCHORS AND DOWELS FOR TRAFFIC RAILINGS".
25	REFER TO THE SPECIAL PROVISIONS FOR "ANTI-GRAFFITI COATING" FOR ADDITIONAL INFORMATION.

benesch engineers · scientists · planners
Alfred Benesch & Company
205 North Michigan Avenue, Suite 2400
Chicago, Illinois 60601
312-565-0450 Job No. 10061

DESIGN FOR VARIABLE SKEW (L.A.)

278'-8 x 40' CONTINUOUS WELDED GIRDER BRIDGE W/14' BIKE TRAIL

139'-4 END SPAN 139'-4 INTERIOR SPANS

ESTIMATED QUANTITIES

STA. 3589+46.06, BASELINE U.S. 67 RAMP C TBD

SCOTT COUNTY

IOWA DEPARTMENT OF TRANSPORTATION - HIGHWAY DIVISION

DESIGN SHEET NO. 1 OF 64 FILE NO. 30253 DESIGN NO. 3608

GENERAL NOTES:

THIS DESIGN IS FOR A NEW 278'-8 X 40'-0 CONTINUOUS WELDED GIRDER ENTRANCE RAMP C BRIDGE CARRYING TWO LANES OF TRAFFIC AND A 14'-0 BIKE PATH OVER GILBERT ST. FROM U.S. 67 TO EASTBOUND INTERSTATE 74.

DURING CONSTRUCTION OF THIS PROJECT THE BRIDGE CONTRACTOR WILL BE REQUIRED TO COORDINATE OPERATIONS WITH THOSE OF OTHER CONTRACTORS WORKING WITHIN THE SAME AREA. OTHER WORK IN PROGRESS DURING THE SAME PERIOD OF TIME IS LISTED IN THE ROADWAY PLANS.

IT SHALL BE THE BRIDGE CONTRACTOR'S RESPONSIBILITY TO PROVIDE SITES FOR EXCESS EXCAVATED MATERIAL. NO PAYMENT FOR OVERHAUL WILL BE ALLOWED FOR MATERIAL HAULED TO THESE SITES.

THE CITY AND UTILITY COMPANIES WHOSE FACILITIES ARE SHOWN ON THE PLANS OR KNOWN TO BE WITHIN THE CONSTRUCTION LIMITS SHALL BE NOTIFIED BY THE BRIDGE CONTRACTOR OF THE CONSTRUCTION STARTING DATE.

THIS BRIDGE IS DESIGNED FOR HL-93 LOADING, PLUS 20 LBS. PER SQUARE FOOT OF ROADWAY FOR FUTURE WEARING SURFACE.

THE USE OF STEEL OR HIGH-DENSITY OVERLAID (HDO) PLYWOOD FACED FORMS IS REQUIRED FOR THE FORMING OF ALL PIER CONCRETE SURFACES FROM THE TOP OF THE FOOTINGS TO THE BOTTOM OF PIER CAP. USE OF HDO OR MEDIUM-DENSITY OVERLAID (MDO) PLYWOOD FACED FORMS IS REQUIRED FOR THE FORMING OF THE PIER CAP. PLAIN PLYWOOD-FACED FORMS WILL NOT BE ALLOWED FOR ANY PORTION OF THE PIER STEM, COLUMNS OR CAP SURFACES.

SUBSTRUCTURE CONCRETE SHALL BE PROTECTED FROM STAINING BY A WRAPPING OF POLYETHYLENE OR SIMILAR MATERIALS WHICH SHALL BE LEFT IN PLACE AND KEPT IN A SERVICEABLE CONDITION UNTIL AFTER THE DECK HAS BEEN PLACED. IF SUBSTRUCTURE CONCRETE IS STAINED, THE STAINS SHALL BE REMOVED BY METHODS APPROVED BY THE ENGINEER. ALL COSTS ASSOCIATED WITH THE PROTECTION AND ANY REQUIRED CLEANING OF THE SUBSTRUCTURE CONCRETE SHALL BE INCLUDED IN THE PRICE BID FOR "STRUCTURAL STEEL".

CONCRETE BARRIER RAILS PLACED USING THE SLIPFORM METHOD WILL REQUIRE THE USE OF A CLASS BR CONCRETE IN ACCORDANCE WITH ARTICLE 2513.03, A, 2, OF THE STANDARD SPECIFICATIONS. CAST-IN-PLACE BARRIER RAILS SHALL USE HIGH PERFORMANCE CONCRETE. CLASS D CONCRETE IS NOT PERMITTED FOR CONCRETE BARRIER RAILS (CAST-IN-PLACE OR SLIPFORMED METHOD).

THIS STRUCTURE SHALL BE BUILT WITH WEATHERING STEEL. ALL STRUCTURAL STEEL, EXCEPT AS NOTED, SHALL CONFORM TO ASTM A709 GRADE 50W. PAINTING REQUIREMENTS FOR THIS STRUCTURE SHALL BE IN ACCORDANCE WITH THE "SPECIAL PROVISIONS FOR FLUOROPOLYMER PAINT FOR STRUCTURAL STEEL". SEE SUPERSTRUCTURE STEEL PAINTING NOTES ELSEWHERE IN THESE PLANS.

THESE BRIDGE PLANS LABEL ALL REINFORCING STEEL WITH ENGLISH NOTATION (5a1 IS $\frac{5}{8}$ INCH DIAMETER BAR). ENGLISH REINFORCING STEEL RECEIVED IN THE FIELD MAY DISPLAY THE FOLLOWING "BAR DESIGNATION". THE "BAR DESIGNATION" IS THE STAMPED IMPRESSION ON THE REINFORCING BARS, AND IS EQUIVALENT TO THE BAR DIAMETER IN MILLIMETERS.

ENGLISH SIZE:	3	4	5	6	7	8	9	10	11
BAR DESIGNATION:	10	13	16	19	22	25	29	32	36

STAINLESS STEEL REBAR SHALL BE SHIPPED, HANDLED AND PLACED SUCH THAT CARBON STEEL DOES NOT COME IN CONTACT WITH THE STAINLESS STEEL REBAR. PADDING SHALL BE USED TO SEPARATE CARBON STEEL BUNDLING BANDS OR LIFTING DEVICES FROM THE STAINLESS STEEL REBAR. WIRE ROPE SHALL NOT BE USED IN LIFTING OR HANDLING THE STAINLESS STEEL REINFORCING. COVER STAINLESS STEEL REBAR WITH TARPS DURING OUTDOOR STORAGE. USE WOODEN SPACERS TO SEPARATE BUNDLES OF STAINLESS STEEL REBAR FROM OTHER TYPES OF REBAR. USE WOODEN SUPPORTS TO STORE STAINLESS STEEL REBAR OFF THE GROUND OR SHOP FLOOR.

GUARDRAIL TO BE PLACED BY OTHERS.

THE APPROACH FILLS AS SHOWN ARE NOT PART OF THIS CONTRACT, BUT ARE TO BE IN PLACE BEFORE ABUTMENT PILES ARE DRIVEN. THE BRIDGE CONTRACTOR IS TO LEVEL OFF AND SHAPE THE BERMS TO THE ELEVATIONS AND DIMENSIONS SHOWN. DRESSING OF SLOPES OUTSIDE THE BRIDGE AREA NOT DISTURBED BY THE BRIDGE CONTRACTOR SHALL BE PAID FOR AS EXTRA WORK.

CAST IN-ONE-PIECE STEEL PILE POINTS ARE REQUIRED FOR PIER 22C & ABUTMENT 23C IN ACCORDANCE WITH ARTICLE 4167.02 OF THE CURRENT STANDARD SPECIFICATIONS AND MATERIALS I.M. 468.

KEYWAY DIMENSIONS SHOWN ON THE PLANS ARE BASED ON NOMINAL DIMENSIONS UNLESS STATED OTHERWISE. IN ADDITION, THE BEVEL USED ON THE KEYWAY SHALL BE LIMITED TO A MAXIMUM OF 10 DEGREES FROM VERTICAL.

FAINT LINES ON PLANS INDICATE THE EXISTING STRUCTURE OR STRUCTURE BY OTHERS. SEE DESIGN NO. 3408.

ALL REINFORCING BARS AND BARS NOTED AS DOWELS SUPPLIED FOR THIS STRUCTURE SHALL BE DEFORMED REINFORCEMENT UNLESS OTHERWISE NOTED OR SHOWN.

SEE DESIGN SHEET 35 FOR JACKING NOTES.

ABUTMENT PILES SHALL NOT BE DRIVEN FOR A MINIMUM OF 30 DAYS FOLLOWING COMPLETION OF APPROACH FILLS. THE TIME PERIOD BETWEEN COMPLETION OF FILLS AND DRIVING PILES MAY BE CHANGED AS ORDERED BY THE ENGINEER BASED UPON REVIEW OF SETTLEMENT PLATES. SEE SETTLEMENT PLATE LOCATIONS ON SPS.7.

THE CONTRACTOR SHALL NOTE THE STANDARD ABUTMENT DETAILS HAVE BEEN MODIFIED TO OFFSET THE ABUTMENT FOOTING FROM THE WINGWALL AND THE ABUTMENT FOOTING FROM THE BACKWALL TO AID IN TYING THE REINFORCING STEEL BETWEEN THE FOOTING TO WINGWALL AND THE FOOTING TO BACKWALL.

MINIMUM PILE LENGTH SHALL BE 16'-0 BELOW THE BOTTOM OF THE PILE CAP. IF ROCK IS ENCOUNTERED PRIOR TO MEETING THIS MINIMUM LENGTH, 24" DIA. (MIN.) HOLES SHALL BE DRILLED OR CORED A MINIMUM OF 3 FEET INTO SOUND ROCK. THE PILES SHALL BE SEATED INTO THE DRILLED OR CORED HOLES WITH A PILE DRIVING HAMMER TO PROVIDE THE SPECIFIED DESIGN BEARING. AFTER THE PILES ARE SEATED, THE DRILLED OR CORED HOLES SHALL BE FILLED WITH CLASS 'C' CONCRETE FROM THE BOTTOM OF THE HOLE TO THE TOP OF THE BEDROCK. THE REMAINING PORTION OF THE HOLES SHALL BE BACKFILLED WITH GRANULAR MATERIAL. ROCK CORING, IF REQUIRED, SHALL BE PAID FOR IN ACCORDANCE WITH ARTICLE 1109.03, B OF THE STANDARD SPECIFICATIONS.

FLANGES FOR GIRDER SECTIONS OVER PIER 22C SHALL BE HPS GRADE 70W STRUCTURAL STEEL. ALL OTHER STRUCTURAL STEEL IS HPS GRADE 50W.

LONGITUDINAL GROOVING WILL NOT BE A PART OF THIS CONTRACT, BUT WILL BE DONE BY OTHERS PRIOR TO OPENING THE BRIDGE TO TRAFFIC.

SEE ROADWAY PLANS FOR ELECTRICAL WIRING AND LIGHTING DETAILS. ALL ACCESSORIES EMBEDDED IN STRUCTURE ARE DETAILED IN THESE PLANS AND THE COST IS INCLUDED IN THE BID PRICE FOR CONCRETE BARRIER RAIL. THE LIGHT FIXTURES TO BE ATTACHED TO THE PIER WILL BE SUPPLIED IN A SEPARATE SUPPLY PROJECT. INSERT PLACEMENT IN THE PIER CAP AND COLUMN WILL BE DEPENDENT UPON THE SPECIFIC FIXTURES PROVIDED. THE CONTRACTOR SHALL COORDINATE CONDUIT LOCATIONS WITH ADJACENT CONTRACTORS TO ENSURE CONTINUITY OF THE SYSTEM.

THE ROADWAY WILL BE CLOSED TO THRU TRAFFIC. REFER TO THE TRAFFIC CONTROL PLAN ELSEWHERE IN THESE PLANS.

COORDINATION REQUIREMENTS WITH MIDAMERICAN ENERGY COMPANY:

THE BRIDGE CONSTRUCTION IS IN CLOSE PROXIMITY TO TWO EXISTING 69,000 VOLT (69 KV) OVERHEAD ELECTRIC TRANSMISSION LINES OWNED BY MIDAMERICAN ENERGY COMPANY. THESE OVERHEAD 69 KV ELECTRIC LINES CROSS THE PROJECT AREA ON A DOUBLE CIRCUIT TWO-POLE STRUCTURE NEAR STATION 6788. THE EXISTING TWO-POLE 69 KV ELECTRIC LINE STRUCTURE IN THE PROJECT AREA SUPPORTING THESE ELECTRIC LINES WILL BE PERMANENTLY MOVED EASTERLY TO A LOCATION OUTSIDE THE IMMEDIATE WORK AREA PRIOR TO THE START OF WORK. HOWEVER, SINCE THESE 69 KV ELECTRIC LINES ARE AN IMPORTANT PART OF THE MIDAMERICAN ENERGY COMPANY ELECTRICAL TRANSMISSION NETWORK, THESE OVERHEAD ELECTRIC LINE CROSSINGS CAN'T BE CONTINUOUSLY DE-ENERGIZED OR RELOCATED. THE CONTRACTOR SHALL BE REQUIRED TO CONFIGURE ITS WORK TO AVOID IMPACTING THESE ELECTRIC LINES, OR THE OPERATION THEREOF, EXCEPT AS PROVIDED BELOW.

CONTRACTOR SAFETY:

PLEASE NOTE THAT THESE ELECTRIC LINES ARE CONTINUOUSLY ENERGIZED. THE CONDUCTORS ON THESE ELECTRIC LINES ARE BARE AND UNINSULATED AND CONTACT WITH THESE ELECTRIC LINES CAN CAUSE SERIOUS INJURY OR DEATH. ALL PEOPLE INVOLVED WITH ANY ACTIVITY WITHIN THE VICINITY OF THESE ELECTRIC LINES MUST BE AWARE AND REMAIN AWARE OF THE HAZARDS OF WORKING AROUND THESE ELECTRIC LINES, INCLUDING MAINTAINING PROPER SAFETY CLEARANCES FROM THESE ELECTRIC LINES.

69 KV ELECTRIC LINE CLEARANCES:

THE 69 KV ELECTRIC LINES WILL PROVIDE APPROXIMATELY 30 FEET OF TOTAL VERTICAL CLEARANCE ABOVE THE EXISTING BRIDGE AND APPROXIMATELY 61 FEET OF TOTAL VERTICAL CLEARANCE ABOVE THE EXISTING GROUND, AT MAXIMUM SAG. FOLLOWING THE RELOCATION OF THE EXISTING TWO-POLE 69 KV ELECTRIC LINE STRUCTURE IN THE PROJECT AREA, THE VERTICAL CLEARANCE ABOVE THE DECK OF THE NEW BRIDGE WILL BE APPROXIMATELY 29 FEET. THE CONTRACTOR SHALL NOT WORK WITHIN THE MINIMUM DISTANCE SPECIFIED BY THE OCCUPATIONAL SAFETY AND HEALTH ADMINISTRATION (OSHA) OF ANY CONDUCTOR WHILE THE 69 KV ELECTRIC LINES ARE ENERGIZED. WHEN THE 69 KV ELECTRIC LINES ARE DE-ENERGIZED, THE CONTRACTOR SHALL NOT WORK WITHIN TWO FEET OF ANY ELECTRIC LINE CONDUCTOR.

69 KV ELECTRIC LINE OUTAGES:

THE CONTRACTOR MAY PURSUE INTERMITTENT 69 KV ELECTRIC LINE OUTAGES WITH MIDAMERICAN ENERGY COMPANY, BUT MUST RECOGNIZE THAT A LONGER CONTINUOUS ELECTRIC LINE OUTAGE WILL NOT BE POSSIBLE. THE CONTRACTOR SHALL COORDINATE ALL NEEDED 69 KV ELECTRIC LINE OUTAGES WITH MIDAMERICAN ENERGY COMPANY TO MAINTAIN THE PROJECT CONSTRUCTION SCHEDULE. THE MIDAMERICAN ENERGY COMPANY ELECTRIC SYSTEM CONTROL COORDINATOR REQUIRES A MINIMUM OF 14 CALENDAR DAYS IN ADVANCE OF ANY REQUEST FOR A 69 KV ELECTRIC LINE OUTAGE. THE CONTRACTOR IS REQUIRED TO PLAN AND SCHEDULE INTERMITTENT 69 KV ELECTRIC LINE OUTAGES DIRECTLY WITH MIDAMERICAN ENERGY COMPANY. WITHOUT EARLY COORDINATION WITH MIDAMERICAN ENERGY COMPANY, THE INTERMITTENT 69 KV ELECTRIC LINE OUTAGE REQUEST WILL NOT BE GRANTED. MIDAMERICAN ENERGY COMPANY RESERVES THE RIGHT TO CANCEL ANY PREVIOUSLY SCHEDULED 69 KV ELECTRIC LINE OUTAGES DUE TO UNFORESEEN CONDITIONS OR STORMS THAT THREATEN THE RELIABILITY OF THE ELECTRIC SYSTEM, AND WILL GIVE AS MUCH ADVANCED NOTICE AS POSSIBLE TO THE CONTRACTOR. TO COORDINATE ALL 69 KV ELECTRIC LINE OUTAGES, THE CONTRACTOR SHALL CALL JAMES LEWIS AT PHONE NUMBER (563) 333-8927 AT MIDAMERICAN ENERGY COMPANY TO REQUEST AND COORDINATE THESE ELECTRIC LINE OUTAGES.

COORDINATION REQUIREMENTS WITH MIDAMERICAN ENERGY COMPANY (CONT.):

DE-ENERGIZING THE 69 KV ELECTRIC LINES BETWEEN THE TIME PERIOD OF MAY 15 THROUGH SEPTEMBER 15 MAY BE RESTRICTED. MIDAMERICAN ENERGY COMPANY RESERVES THE RIGHT TO RE-ENERGIZE THE 69 KV ELECTRIC LINES AT ANY TIME DURING A 69 KV ELECTRIC LINE OUTAGE BY PROVIDING A TWO-HOUR NOTICE TO THE CONTRACTOR.

SPECIFICATIONS:

DESIGN: AASHTO LRFD 5th Ed, SERIES OF 2010, EXCEPT AS NOTED IN THE CURRENT IOWA BRIDGE DESIGN MANUAL.

CONSTRUCTION: IOWA DEPARTMENT OF TRANSPORTATION STANDARD SPECIFICATIONS FOR HIGHWAY AND BRIDGE CONSTRUCTION, SERIES 2015, PLUS APPLICABLE GENERAL SUPPLEMENTAL SPECIFICATIONS, DEVELOPMENTAL SPECIFICATIONS, SUPPLEMENTAL SPECIFICATIONS AND SPECIAL PROVISIONS SHALL APPLY TO CONSTRUCTION WORK ON THIS PROJECT.

THE DEVELOPMENTAL SPECIFICATIONS, DS-15033, FOR HIGH PERFORMANCE CONCRETE FOR STRUCTURES SHALL APPLY TO WORK ON THIS PROJECT.

THE DEVELOPMENTAL SPECIFICATIONS, DS-15032, FOR MASS CONCRETE-CONTROL OF HEAT OF HYDRATION SHALL APPLY TO WORK ON THIS PROJECT.

THE DEVELOPMENTAL SPECIFICATIONS, DS-15017, FOR ADHESIVE-BONDED ANCHORS AND DOWELS FOR TRAFFIC RAILINGS SHALL APPLY TO WORK ON THIS PROJECT.

THE SPECIAL PROVISIONS FOR HIGH PERFORMANCE SELF CONSOLIDATING CONCRETE (HP-SCC) SHALL APPLY TO WORK ON THIS PROJECT.

THE SPECIAL PROVISIONS FOR FLUOROPOLYMER PAINT FOR STRUCTURAL STEEL SHALL APPLY TO WORK ON THIS PROJECT.

THE SPECIAL PROVISIONS FOR ANTI-GRAFFITI COATING SHALL APPLY TO WORK ON THIS PROJECT.

DESIGN STRESSES:

DESIGN STRESSES FOR THE FOLLOWING MATERIALS ARE IN ACCORDANCE WITH THE AASHTO LRFD BRIDGE DESIGN SPECIFICATIONS, 5th Ed, SERIES OF 2010, EXCEPT AS NOTED IN THE CURRENT IOWA BRIDGE DESIGN MANUAL.

REINFORCING STEEL IN ACCORDANCE WITH LRFD AASHTO SECTION 5, GRADE 60.

CONCRETE IN ACCORDANCE WITH LRFD AASHTO SECTION 5, f'c = 3,500 PSI.

HIGH PERFORMANCE SELF CONSOLIDATING CONCRETE FOR COLUMN OF THE PIER, f'c = 5,000 PSI.

BRIDGE DECK CONCRETE f'c = 3,500 PSI.

STRUCTURAL STEEL IN ACCORDANCE WITH LRFD AASHTO SECTION 6. ASTM A709 GRADE 36, GRADE 50, GRADE 50W, AND GRADE 70W (AASHTO M270 GRADE 36, GRADE 50, GRADE 50W, AND GRADE 70W).

FATIGUE CYCLES BASED ON INFINITE FATIGUE.

JACKING STIFFENER LOCATIONS ARE DESIGNED FOR THE SAME REACTIONS AS TABULATED IN THE GIRDER REACTION TABLES.

BRIDGE DECK DIMENSIONS TABLE

	ITEM	UNITS	QUANTITY
1	DECK LENGTH	L.F.	281.3
2	MINIMUM DECK WIDTH	L.F.	58.5
3	MAXIMUM DECK WIDTH	L.F.	58.5
4	DECK AREA	S.F.	16456

1. DECK LENGTH IS MEASURED FROM ℄ OF EXPANSION JOINT AT PIER 21 TO FACE OF PAVING NOTCH AT ABUTMENT 23C ALONG THE CENTERLINE OF STRUCTURE.

2, 3. DECK WIDTHS ARE MEASURED FROM OUT-TO-OUT OF DECK PERPENDICULAR TO THE U.S. 67 RAMP C BASELINE.

4. DECK AREA IS TO BE BASED ON THE TABULATED DECK LENGTH AND OUT-TO-OUT DECK DIMENSIONS.

ALIGNMENTS SHOWN ELSEWHERE IN THESE PLANS.

POLLUTION PREVENTION PLAN SHOWN ELSEWHERE IN THESE PLANS.

DESIGN FOR VARIABLE SKEW (L.A.)

278'-8 x 40' CONTINUOUS WELDED GIRDER BRIDGE W/14' BIKE TRAIL

139'-4 END SPAN 139'-4 INTERIOR SPANS

GENERAL NOTES

STA. 3589+46.06, BASELINE U.S. 67 RAMP C TBD

SCOTT COUNTY

IOWA DEPARTMENT OF TRANSPORTATION - HIGHWAY DIVISION

DESIGN SHEET NO. 2 OF 64 FILE NO. 30253 DESIGN NO. 3608

benesch engineers · scientists · planners
Alfred Benesch & Company
205 North Michigan Avenue, Suite 2400
Chicago, Illinois 60601
312-565-0450 Job No. 10061

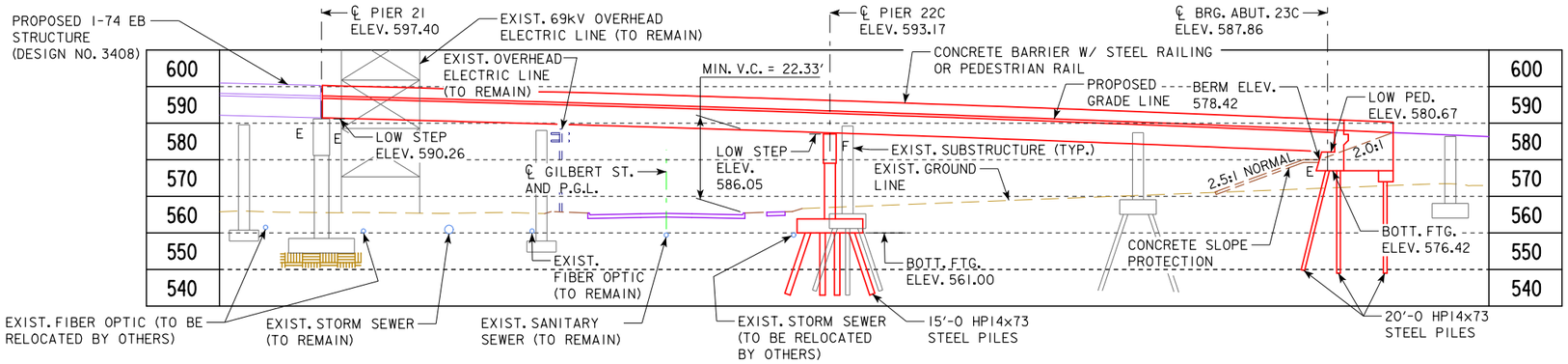

LONGITUDINAL SECTION ALONG BASELINE U.S. 67 RAMP C

NOTE: PIERS AND ABUTMENT NOT SHOWN SKEWED FOR CLARITY.

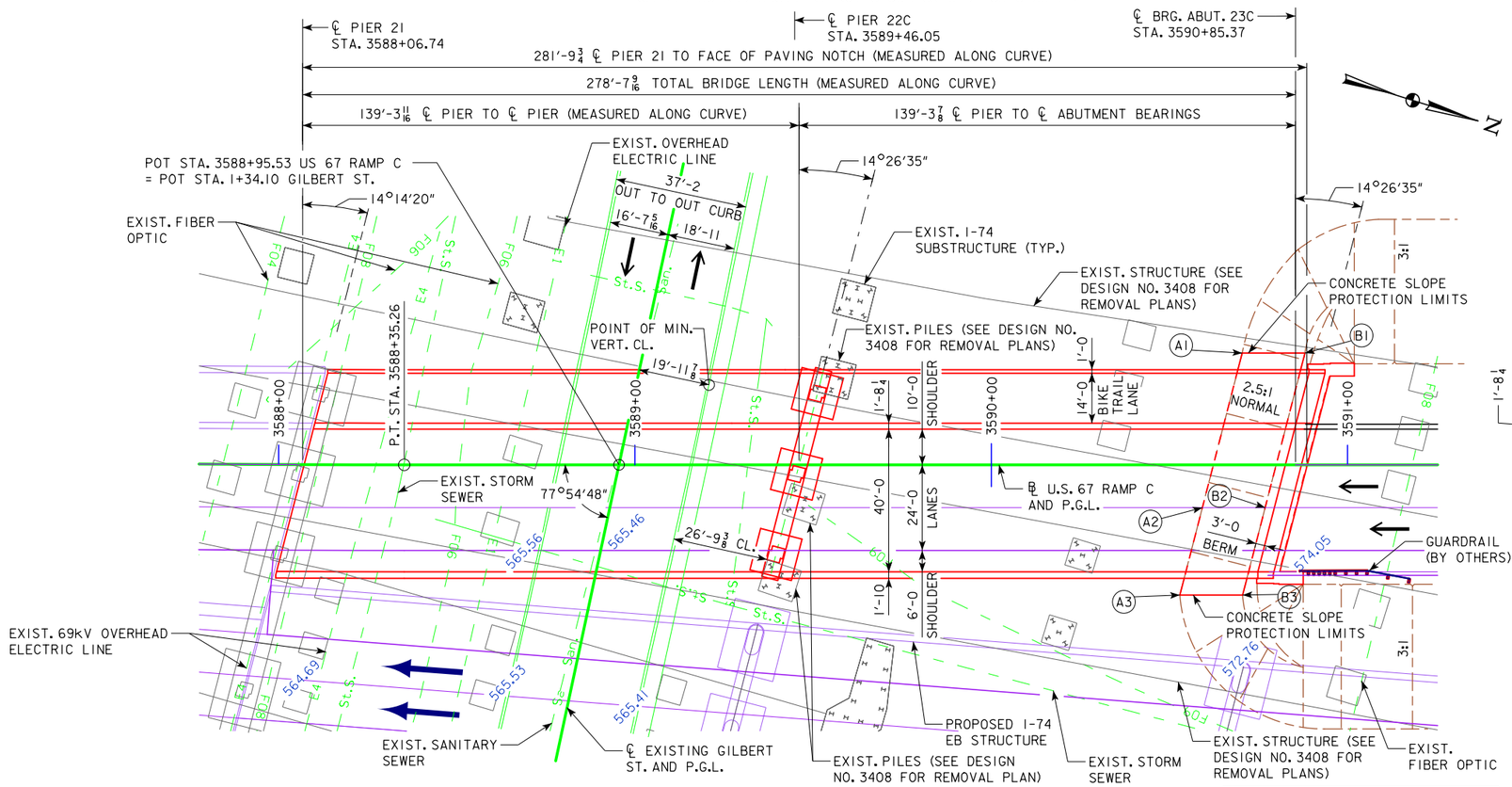

SITUATION PLAN

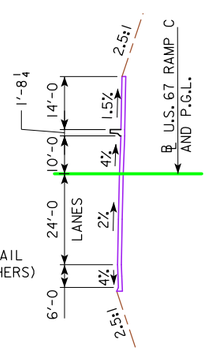

TYPICAL APPROACH SECTION

PROPOSED PROFILE GRADE U.S. 67 RAMP C

STA = 3587+98.76
BEGIN RAMP C CONST.
ELEV = 597.61'

VPI STA = 3594+50.00
VPI ELEV = 571.35'
VC = 100'

-2.610% -4.560%

VPI STA = 3589+75.00
VPI ELEV = 593.01'
VC = 350'

EXISTING PROFILE GRADE GILBERT ST.

-0.280% 0.720%

VPOC STA = 0+00.00
VPOC ELEV = 565.33'

VPOT STA = 2+87.53
VPOT ELEV = 566.35'

VPI STA = 1+05.00
VPI ELEV = 565.04'
VC = 100'

U.S. 67 RAMP C CURVE DATA

P.I. STA. = 3586+05.19
Δ = 03° 17' 46.82" LT
D = 00° 42' 58.31"
T = 230.19'
L = 460.26'
E = 3.31
R = 8000.00'
e = N.C.
L = NA
x = NA
m = NA
P.C. STA. = 3583+75.00
P.T. STA. = 3588+35.26

NOTES:

E - DENOTES "EXPANSION BEARING"

F - DENOTES "FIXED BEARING"

FOR LOCATIONS OF DECK DRAINS, SEE DESIGN SHEET 57.

FOR LOCATIONS OF LIGHT POLES, SEE DESIGN SHEET 51 .

FOR LOCATIONS OF SOIL BORINGS, SEE SHEET SPS.7.

FOR EXISTING STRUCTURE REMOVAL PLANS, SEE DESIGN NUMBER 3408.

MINIMUM VERTICAL CLEARANCE

OVERHEAD STATION = 3589+27.99, 23.43' LT.
OVERHEAD ELEVATION = 593.37'
DEPTH OF SUPERSTRUCTURE = 5.95'
UNDERPASS STATION = 494+89.67, 20.88' RT.
UNDERPASS ELEVATION = 565.09'
MINIMUM VERTICAL CLEARANCE = 22.33'

RAMP C TRAFFIC ESTIMATE

2015 AADT	17,550	V.P.D.
2035 AADT	19,360	V.P.D.
2035 DHV	1,600	V.P.H.
TRUCKS	5	%

BERM SLOPE LOCATION TABLE

	ABUTMENT 23C		
	STATION	OFFSET	ELEV.
A1	3590+70.43	31.35 LT	572.04
A2	3590+59.26	12.00 RT	572.62
A3	3590+52.95	36.50 RT	572.94
B1	3590+88.03	31.35 LT	578.17
B2	3590+76.86	12.00 RT	578.17
B3	3590+70.55	36.50 RT	578.17

LOCATION

U.S. 67 RAMP C OVER GILBERT ST.
T-78 N R-4 E
SECTION 29
DAVENPORT TOWNSHIP
SCOTT COUNTY
CITY OF BETTENDORF
LATITUDE = 41.524582
LONGITUDE = -90.513404
FHWA NO. 605976

DESIGN FOR VARIABLE SKEW (L.A.)

278'-8 x 40' CONTINUOUS WELDED GIRDER BRIDGE W/14' BIKE TRAIL

139'-4 END SPAN 139'-4 INTERIOR SPANS

SITUATION PLAN

STA. 3589+46.06, BASELINE U.S. 67 RAMP C TBD

SCOTT COUNTY

IOWA DEPARTMENT OF TRANSPORTATION - HIGHWAY DIVISION

DESIGN SHEET NO. 3 OF 64 FILE NO. 30253 DESIGN NO. 3608

benesch engineers · scientists · planners
Alfred Benesch & Company
205 North Michigan Avenue, Suite 2400
Chicago, Illinois 60601
312-565-0450 Job No. 10061

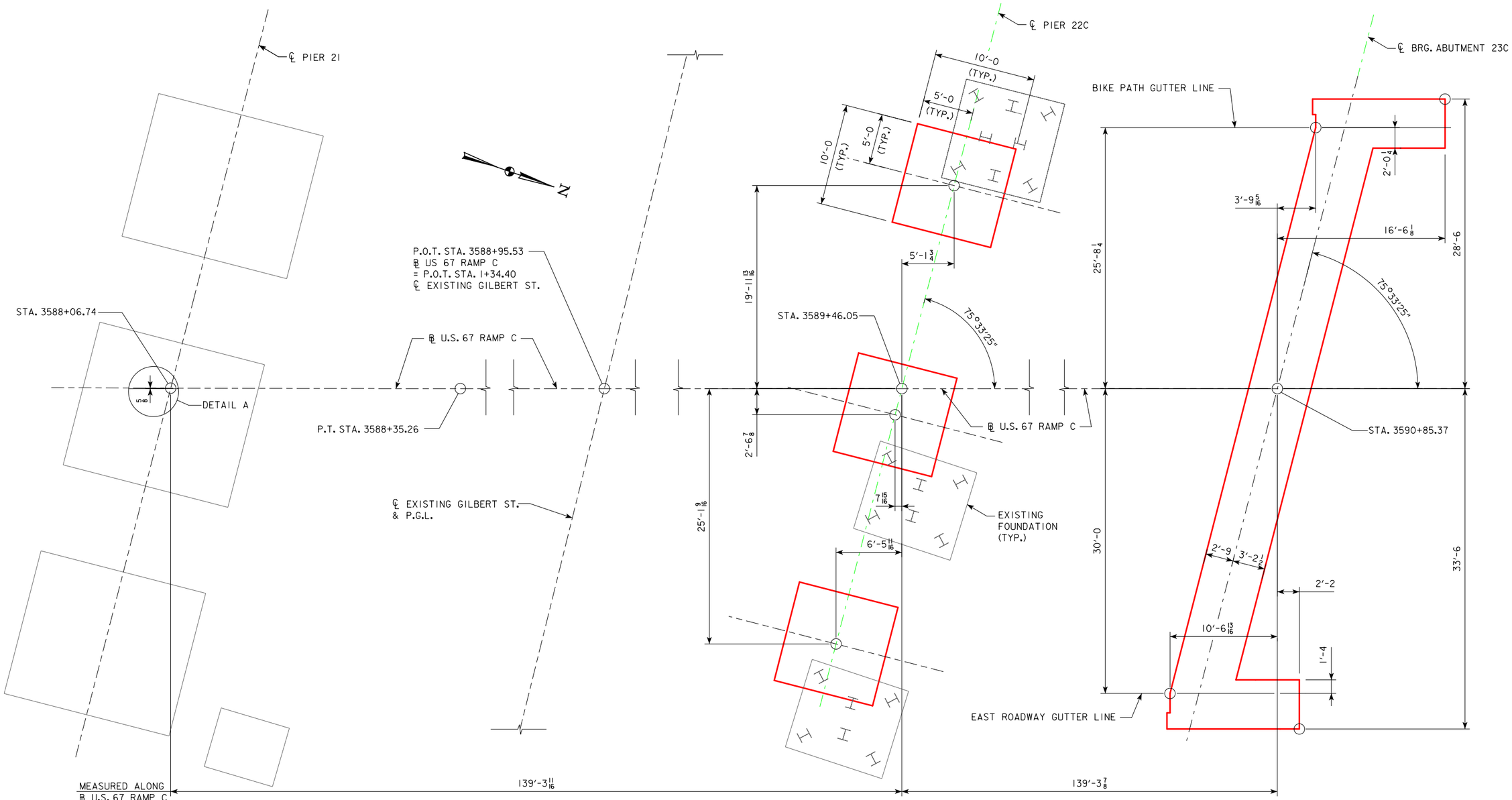

STAKING DIAGRAM

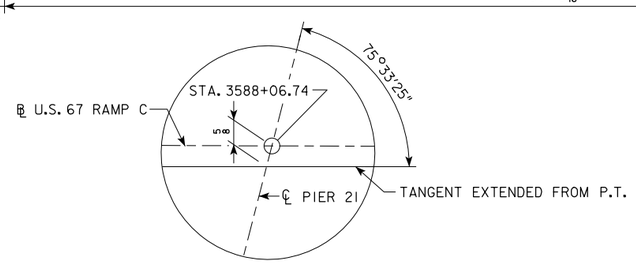

DETAIL A

benesch
engineers · scientists · planners
Alfred Benesch & Company
205 North Michigan Avenue, Suite 2400
Chicago, Illinois 60601
312-565-0450 Job No. 10061

DESIGN FOR VARIABLE SKEW (L.A.)

278'-8 x 40' CONTINUOUS WELDED GIRDER BRIDGE W/14' BIKE TRAIL

139'-4 END SPAN 139'-4 INTERIOR SPANS

STAKING DIAGRAM

STA. 3589+46.06, BASELINE U.S. 67 RAMP C TBD

SCOTT COUNTY

IOWA DEPARTMENT OF TRANSPORTATION - HIGHWAY DIVISION

DESIGN SHEET NO. 4 OF 64 FILE NO. 30253 DESIGN NO. 3608

DESIGN TEAM TJJ/TJJ/KWS	SCOTT COUNTY	PROJECT NUMBER BRFIM-074-1(200)5--05-82	SHEET NUMBER 287

BENCH MARK NO. 500: STA. 6781+18.92 LT. 161.19' ELEV. 575.797, CHISELED "X" IN BOLT E. SIDE CONCRETE STRUCTURE.

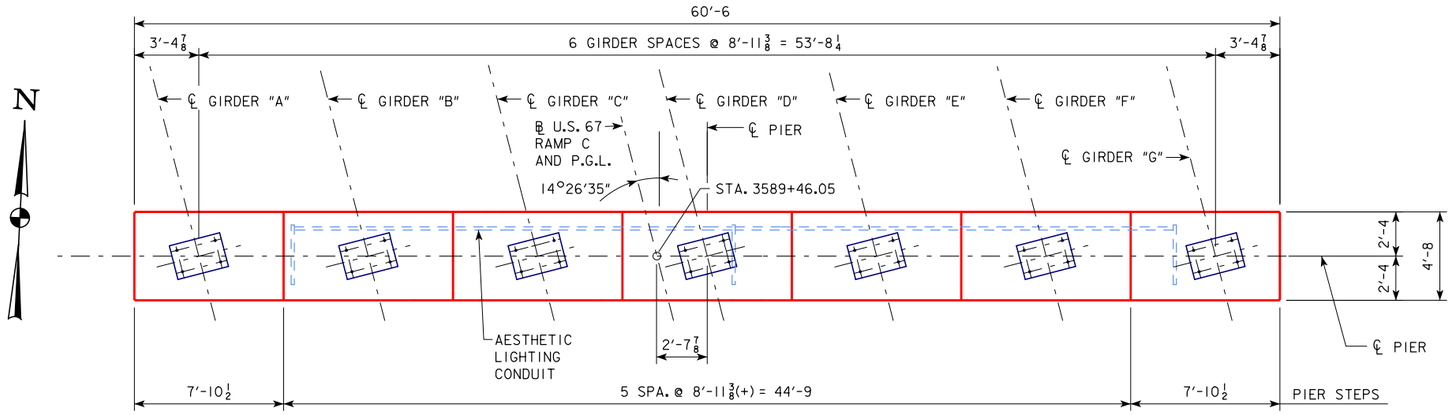

PLAN OF PIER CAP

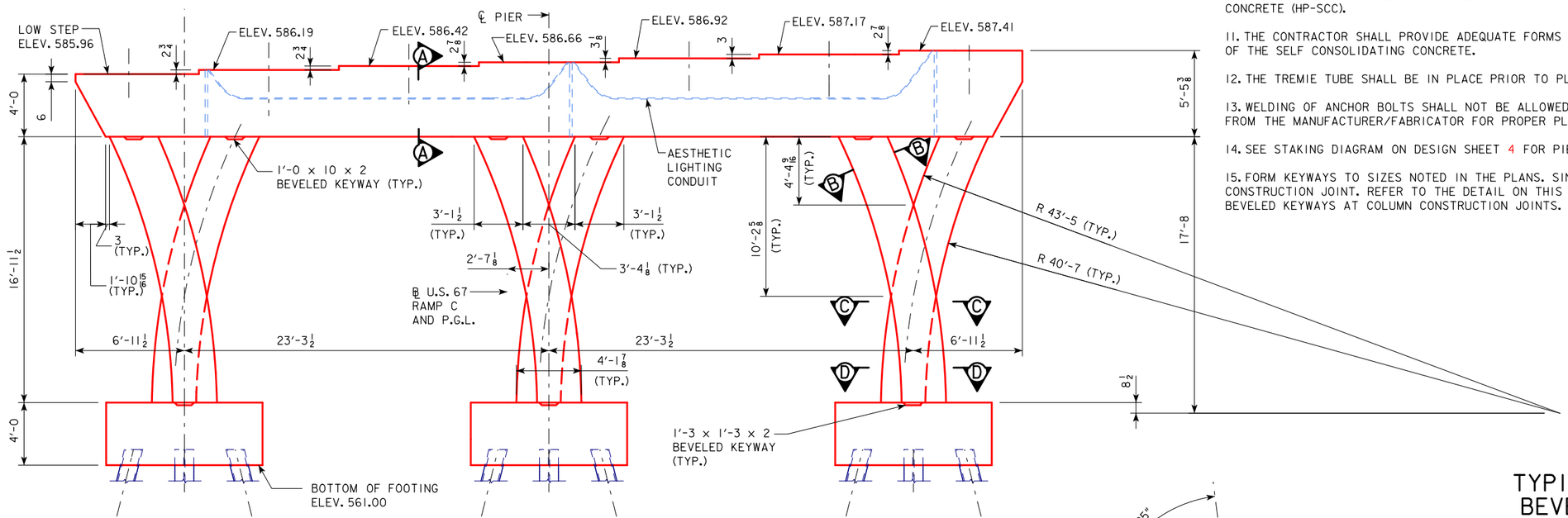

PIER 22C ELEVATION

LOOKING NORTH

PIER NOTES:

1. SEE DESIGN SHEET 8 FOR PIER CONCRETE FINISHING NOTES.

2. FOR SECTIONS A-A, B-B, C-C & D-D DETAILS, SEE DESIGN SHEET 7.

3. BEAM SEAT ELEVATIONS ARE BASED ON BEARING HEIGHTS SHOWN IN THE CONTRACT PLANS. ACTUAL BEARING HEIGHT MAY DIFFER FROM THE CONTRACT PLANS. CONTRACTOR SHALL VERIFY BEARING HEIGHT AND ADJUST SEAT ELEVATIONS AND REINFORCEMENT, IF REQUIRED, PRIOR TO PLACING PIER CONCRETE.

4. THE MINIMUM CLEAR DISTANCE FROM THE FACE OF CONCRETE TO NEAR REINFORCING BAR IS 2" UNLESS NOTED OTHERWISE OR SHOWN.

5. ALL EXPOSED CORNERS, 90 DEGREES OR SHARPER SHALL BE FILLETED WITH A 3/4" DRESSED AND BEVELED STRIP UNLESS NOTED OTHERWISE.

6. REINFORCING BARS MUST BE PLACED TO CLEAR ANCHOR BOLTS. SHIFT REINFORCING BARS SLIGHTLY AS REQUIRED.

7. ELEVATIONS BASED ON NGVD 88 DATUM, UNLESS NOTED.

8. DEVELOPMENTAL SPECIFICATIONS FOR MASS CONCRETE-CONTROL OF HEAT OF HYDRATION SHALL APPLY TO THE COLUMNS.

9. THE USE OF STEEL OR HIGH-DENSITY OVERLAID (HDO) PLYWOOD FACED FORMS IS REQUIRED FOR THE FORMING OF ALL PIER CONCRETE SURFACES FROM THE TOP OF THE FOOTING TO THE BOTTOM OF PIER CAP. THE USE OF STEEL, HDO OR MEDIUM-DENSITY OVERLAID (MDO) PLYWOOD FACED FORMS IS REQUIRED FOR THE FORMING OF THE PIER CAP. PLAIN PLYWOOD-FACED FORMS WILL NOT BE ALLOWED FOR ANY PORTION OF THE PIER STEM, COLUMNS OR CAP SURFACES.

10. THE CONTRACTOR SHALL USE HIGH PERFORMANCE SELF CONSOLIDATING CONCRETE (HP-SCC) FOR THE COLUMN PORTION OF THE PIER. PLACEMENT OF THE SELF CONSOLIDATING CONCRETE SHALL CONFORM TO THE REQUIREMENTS STATED IN THE SPECIAL PROVISIONS FOR HIGH PERFORMANCE SELF CONSOLIDATING CONCRETE (HP-SCC).

11. THE CONTRACTOR SHALL PROVIDE ADEQUATE FORMS TO CONTAIN THE INCREASED HYDRAULIC PRESSURE OF THE SELF CONSOLIDATING CONCRETE.

12. THE TREMIE TUBE SHALL BE IN PLACE PRIOR TO PLACING FORMWORK.

13. WELDING OF ANCHOR BOLTS SHALL NOT BE ALLOWED. THE CONTRACTOR SHALL OBTAIN A TEMPLATE FROM THE MANUFACTURER/FABRICATOR FOR PROPER PLACEMENT OF THE ANCHOR BOLTS.

14. SEE STAKING DIAGRAM ON DESIGN SHEET 4 FOR PIER LAYOUT.

15. FORM KEYWAYS TO SIZES NOTED IN THE PLANS. SINGLE KEYWAYS SHALL BE CENTERED ON THE CONSTRUCTION JOINT. REFER TO THE DETAIL ON THIS SHEET FOR LOCATION OF TWO 1'-0 x 2'-0 x 2 BEVELED KEYWAYS AT COLUMN CONSTRUCTION JOINTS.

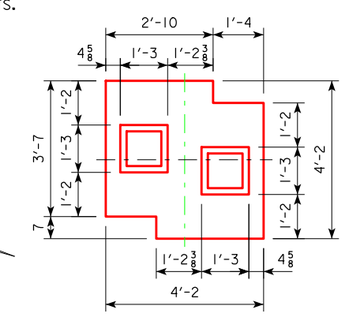

TYPICAL TWO 1'-3 x 1'-3 x 2 BEVELED KEYWAY PLACEMENT DETAIL

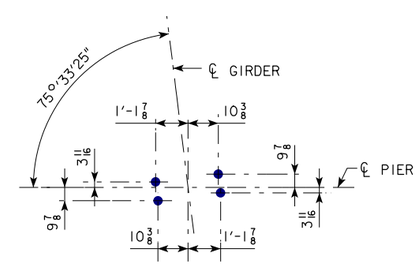

ANCHOR BOLT LAYOUT

(FOR ADDITIONAL DETAILS AND NOTES, SEE DESIGN SHEETS 31 AND 32.)

DESIGN FOR VARIABLE SKEW (L.A.)

278'-8 x 40' CONTINUOUS WELDED GIRDER BRIDGE W/14' BIKE TRAIL

139'-4 END SPAN 139'-4 INTERIOR SPANS

PIER 22C DETAILS

STA. 3589+46.06, BASELINE U.S. 67 RAMP C TBD

SCOTT COUNTY

IOWA DEPARTMENT OF TRANSPORTATION - HIGHWAY DIVISION

DESIGN SHEET NO. 5 OF 64 FILE NO. 30253 DESIGN NO. 3608

benesch engineers · scientists · planners
Alfred Benesch & Company
205 North Michigan Avenue, Suite 2400
Chicago, Illinois 60601
312-565-0450 Job No. 10061

BENCH MARK NO. 500: STA. 6781+18.92 LT. 161.19' ELEV. 575.797,
CHISELED "X" IN BOLT E. SIDE CONCRETE STRUCTURE.

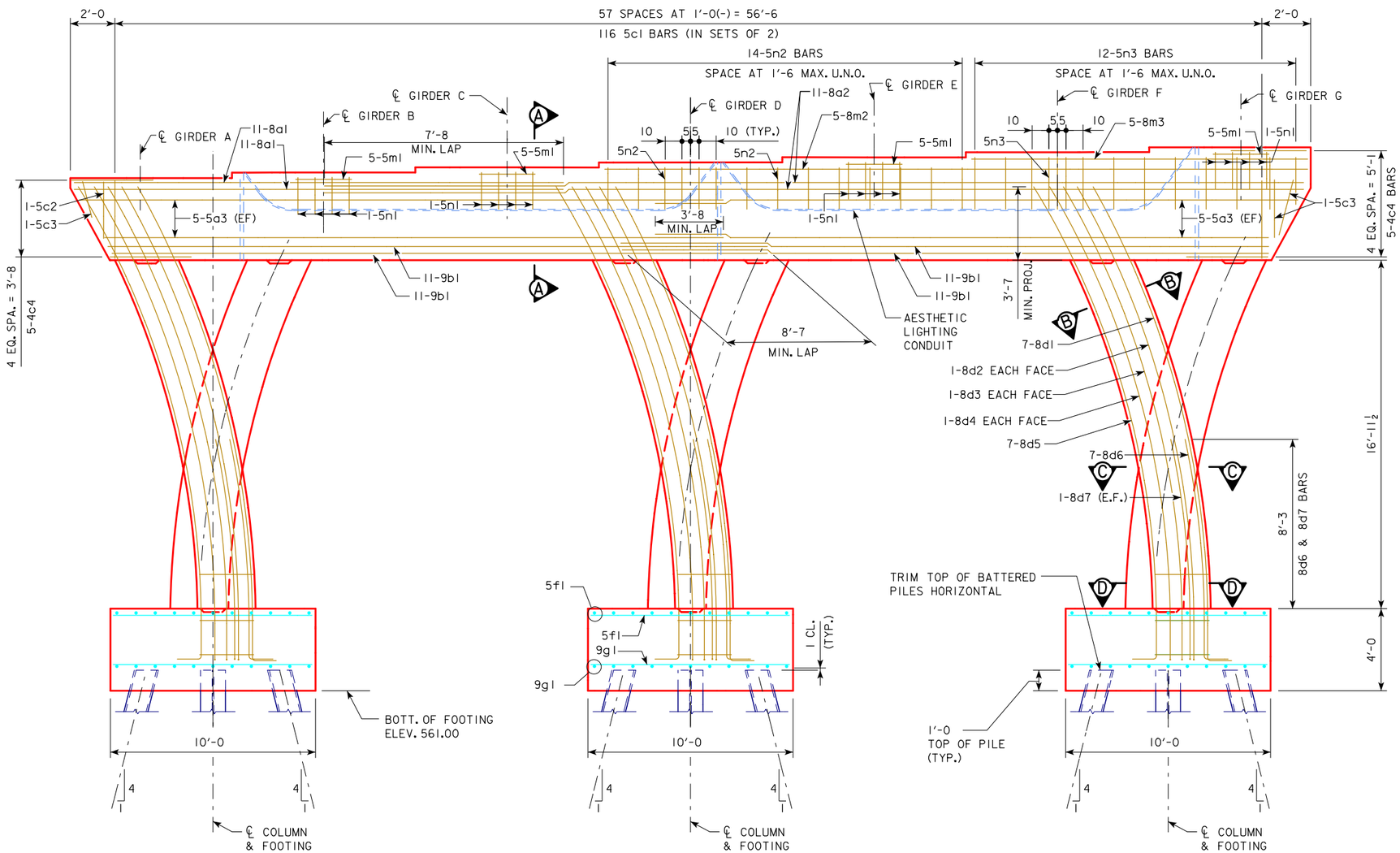

PIER 22C ELEVATION
LOOKING NORTH

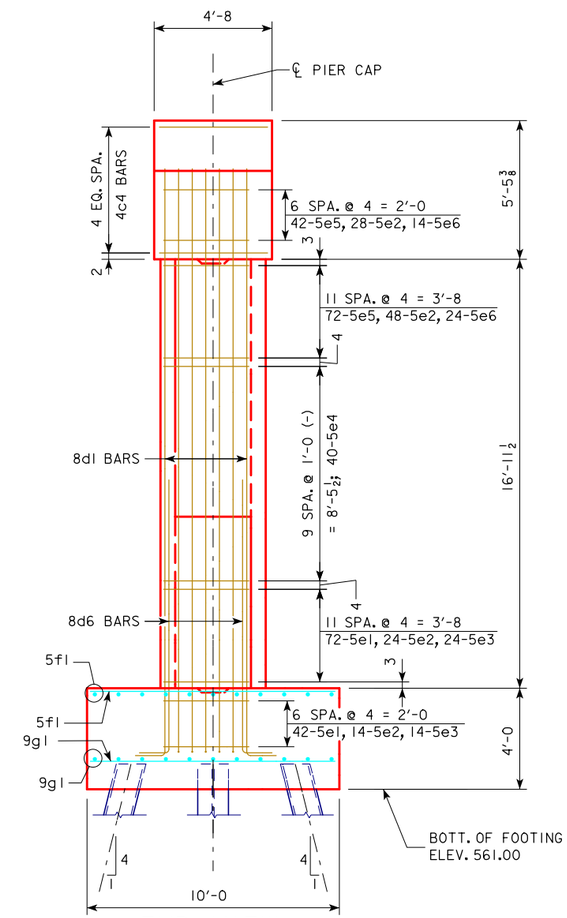

END VIEW

NOTES:

LONGITUDINAL COLUMN BARS SHOWN IN ELEVATION ARE PER ONE ELEMENT OF EACH COLUMN (6 LOCATIONS). COLUMN TIES SHOWN IN END VIEW ARE PER COLUMN (3 LOCATIONS).

SEE DESIGN SHEET 7 FOR SECTIONS A-A, B-B, C-C & D-D DETAILS.

DESIGN FOR VARIABLE SKEW (L.A.)

278'-8 x 40' CONTINUOUS WELDED GIRDER BRIDGE W/14' BIKE TRAIL

139'-4 END SPAN 139'-4 INTERIOR SPANS

PIER 22C DETAILS

STA. 3589+46.06, BASELINE U.S. 67 RAMP C TBD

SCOTT COUNTY

IOWA DEPARTMENT OF TRANSPORTATION - HIGHWAY DIVISION

DESIGN SHEET NO. 6 OF 64 FILE NO. 30253 DESIGN NO. 3608

benesch
engineers · scientists · planners
Alfred Benesch & Company
205 North Michigan Avenue, Suite 2400
Chicago, Illinois 60601
312-565-0450 Job No. 10061

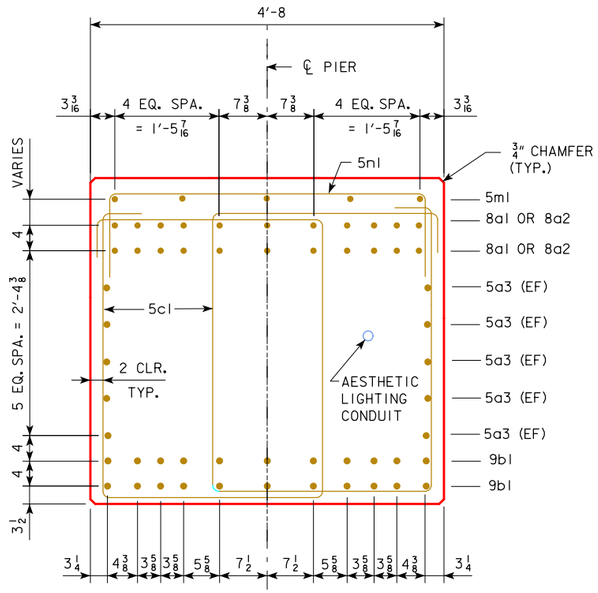

SECTION A-A

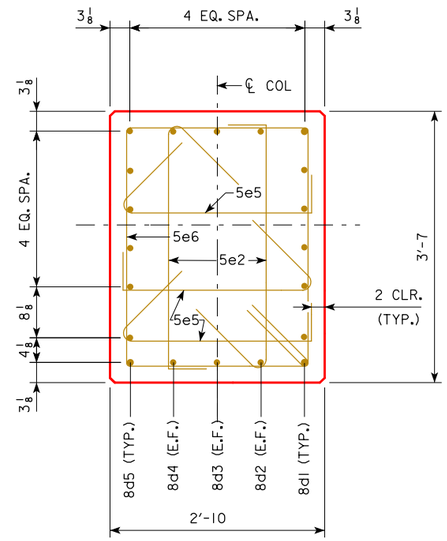

SECTION B-B

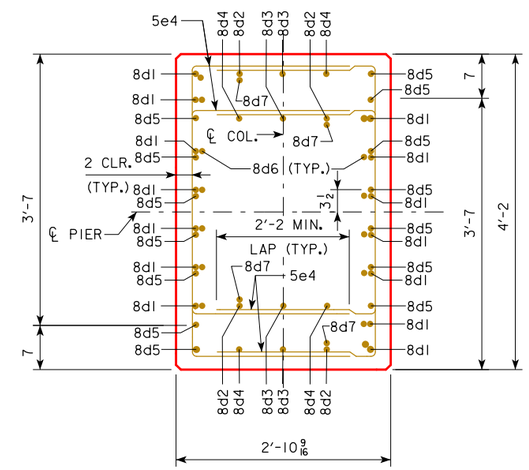

SECTION C-C

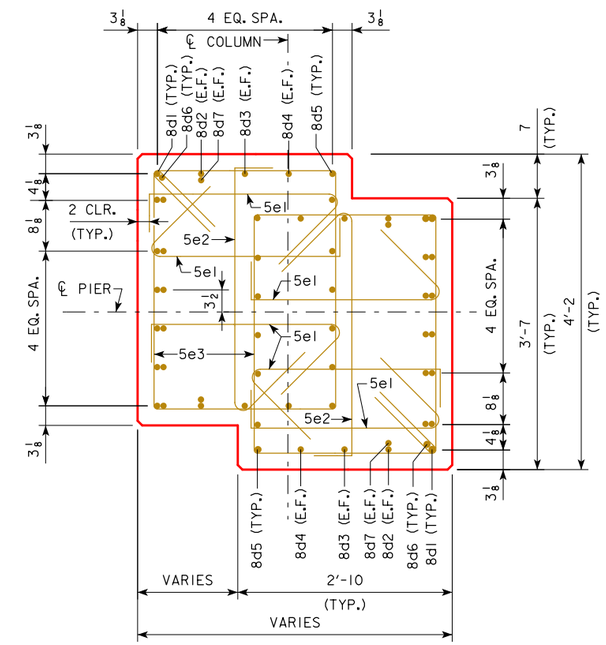

SECTION D-D

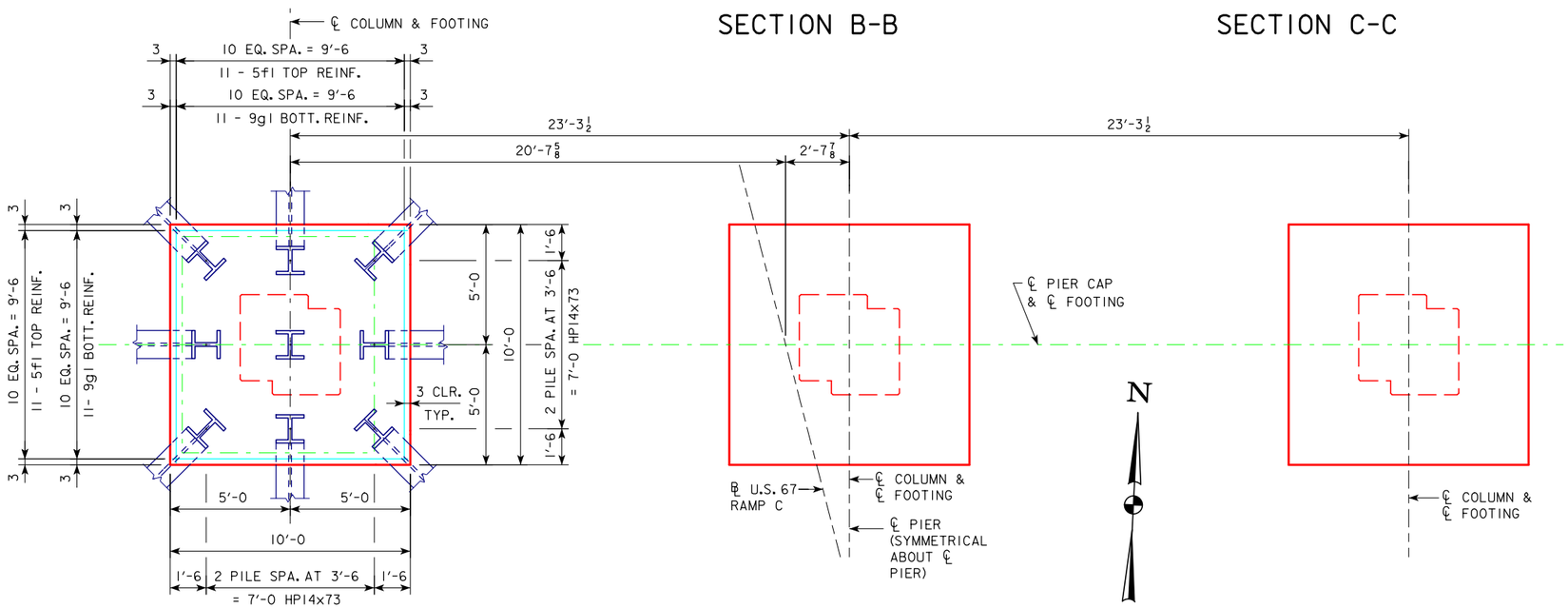

FOOTING PLAN

REINFORCING & PILING AT WEST FOOTING SHOWN, OTHER FOOTINGS SIMILAR

NOTES:

THE CONTRACT LENGTH OF 15 FEET FOR THE PIER 22C PILES IS BASED ON A MIXED SOIL CLASSIFICATION, A TOTAL FACTORED AXIAL LOAD PER PILE (PU) OF 267.6 KIPS, AND A GEOTECHNICAL RESISTANCE FACTOR (PHI) OF 0.70 FOR ROCK END BEARING.

THE NOMINAL AXIAL BEARING RESISTANCE FOR CONSTRUCTION CONTROL WAS DETERMINED FROM A MIXED SOIL CLASSIFICATION AND A GEOTECHNICAL RESISTANCE FACTOR (PHI) OF 0.70 FOR ROCK END BEARING.

THE REQUIRED NOMINAL AXIAL BEARING RESISTANCE FOR THE PIER 22C PILES IS 192 TONS AT END OF DRIVE OR RETAP. THE PILE CONTRACT LENGTH SHALL BE DRIVEN AS PER PLAN UNLESS PILES REACH REFUSAL. CONSTRUCTION CONTROL REQUIRES A WEAP ANALYSIS WITH BEARING GRAPH.

THE DESIGN BEARING FOR THE PIER 22C PILES IS 192 TONS.

27 - HP14x73 STEEL BEARING PILING (15'-0 LONG) REQUIRED AT PIER 22C.

STEEL PILE POINTS ARE REQUIRED FOR THE STEEL H-PILES AT PIER 22C.

DIMENSIONS SHOWN ON PILING LAYOUT ARE AT BOTTOM OF FOOTING.

BATTER PILES 4:1 IN THE DIRECTION SHOWN.

ORIENTATE 5e1 TO ALLOW FOR PLACEMENT OF CONCRETE TREMIE TUBE.

SEE DESIGN SHEET 6 FOR LOCATIONS OF SECTIONS A-A, B-B, C-C & D-D

DESIGN FOR VARIABLE SKEW (L.A.)

278'-8 x 40' CONTINUOUS WELDED GIRDER BRIDGE W/14' BIKE TRAIL

139'-4 END SPAN 139'-4 INTERIOR SPANS

PIER 22C DETAILS

STA. 3589+46.06, BASELINE U.S. 67 RAMP C TBD

SCOTT COUNTY

IOWA DEPARTMENT OF TRANSPORTATION - HIGHWAY DIVISION

DESIGN SHEET NO. 7 OF 64 FILE NO. 30253 DESIGN NO. 3608

benesch engineers · scientists · planners
Alfred Benesch & Company
205 North Michigan Avenue, Suite 2400
Chicago, Illinois 60601
312-565-0450 Job No. 10061

REINFORCING STEEL - PIER NO. 22C

EPOXY-COATED REINFORCING

BAR	LOCATION	SHAPE	NO.	LENGTH	WEIGHT
8a1-22C	CAP, TOP, LONGIT.		22	22'-3	1307
8a2-22C	CAP, TOP, LONGIT.		22	45'-7	2678
5a3-22C	CAP, SIDE, LONGIT.		20	31'-10	664
9b1-22C	CAP, BOTT., LONGIT.		44	34'-5	5149
5c1-22C	CAP, HOOPS		116	14'-1	1704
5c2-22C	CAP, HOOPS		1	15'-3	16
5c3-22C	CAP, HOOPS		3	13'-11	44
4c4-22C	CAP, END, LONGIT.		10	8'-4	56
8d1-22C	STEM\COLUMN VERTICAL		42	25'-7	2869
8d2-22C	STEM\COLUMN VERTICAL		12	25'-7	820
8d3-22C	STEM\COLUMN VERTICAL		12	25'-8	822
8d4-22C	STEM\COLUMN VERTICAL		12	25'-8	822
8d5-22C	STEM\COLUMN VERTICAL		42	25'-9	2888
8d6-22C	STEM\FOOTING DOWEL		42	12'-5	1392
8d7-22C	STEM\FOOTING DOWEL		12	12'-5	398
5e1-22C	COLUMN TIES		342	4'-3	1516
5e2-22C	COLUMN TIES		342	5'-0	1784
5e3-22C	COLUMN TIES		114	13'-11	1655
5e4-22C	COLUMN TIES		120	8'-1	1012
5e5-22C	COLUMN TIES		342	4'-7	1635
5e6-22C	COLUMN TIES		114	14'-7	1734
5m1-22C	CAP, BEAM SEAT		20	3'-0	63
8m2-22C	CAP, STEP, LONGIT.		5	34'-3	457
8m3-22C	CAP, STEP, LONGIT.		5	16'-6	220
5n1-22C	CAP, BEAM SEAT		16	7'-4	122
5n2-22C	CAP, BEAM SEAT		14	8'-10	129
5n3-22C	CAP, BEAM SEAT		12	9'-10	123
	REINFORCING STEEL, EPOXY COATED - TOTAL (LBS.)				32077

NON-COATED REINFORCING

BAR	LOCATION	SHAPE	NO.	LENGTH	WEIGHT
5f1-22C	FOOTING, TOP		66	9'-6	654
9g1-22C	FOOTING, BOTTOM		66	9'-6	2132
	REINFORCING STEEL, NON-COATED - TOTAL (LBS.)				2786

NOTE:

DESIGNATION "-22C" SIGNIFIES BAR ASSOCIATED WITH PIER 22C OF THE RAMP C BRIDGE. "-22C" NOT SHOWN IN DETAILS FOR CLARITY.

BENT BAR DETAILS

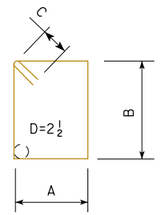

5c1, 5c2, 5c3, 5e3 & 5e6

BAR	"A"	"B"	"C"	LENGTH
5c1	2'-11	3'-8	5½	14'-1
5c2	4'-4	2'-10	5½	15'-3
5c3	4'-4	2'-2	5½	13'-11
5e3	2'-6	3'-3	1'-2½	13'-11
5e6	2'-10	3'-3	1'-2½	14'-7

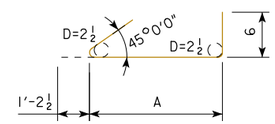

5e1, 5e2 & 5e5

BAR	"A"	LENGTH
5e1	2'-6	4'-3
5e2	3'-3	5'-0
5e5	2'-10	4'-7

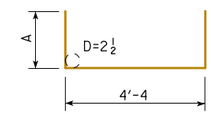

5n1, 5n2 & 5n3

BAR	"A"	LENGTH
5n1	1'-6	7'-4
5n2	2'-3	8'-10
5n3	2'-9	9'-10

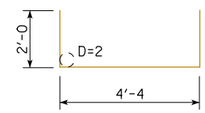

4c4

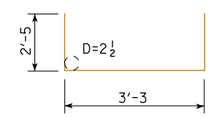

5e4

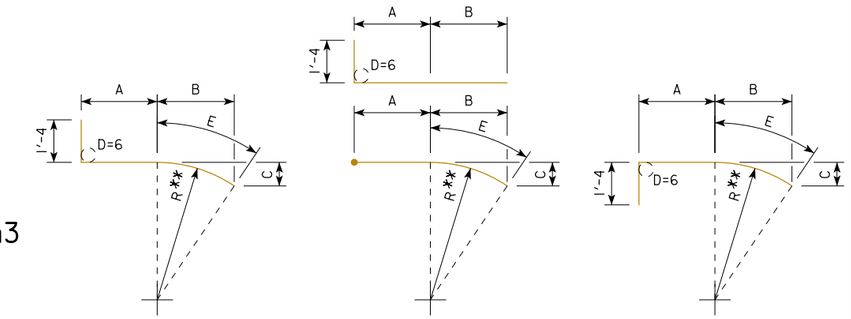

8d1 & 8d6 8d2-8d4 & 8d7 8d5

BAR	A	B	C	E	R**	LENGTH
8d1	2'-0	21'-3	5'-7⅛	22'-2⅝	43'-1⅜	25'-7
8d2	2'-0	21'-3	5'-8⅛	22'-3	42'-6⅜	25'-7
8d3	2'-0	21'-3	5'-9¼	22'-3⅜	41'-11½	25'-8
8d4	2'-0	21'-3	5'-10⅜	22'-3¾	41'-4½	25'-8
8d5	2'-0	21'-3	5'-11½	22'-4⅛	40'-9⅝	25'-9
8d6	2'-0	9'-0	0'-11¼	9'-0¼	43'-0⅝	12'-5
8d7	2'-0	9'-0	0'-11⅜	9'-0¼	42'-6⅜	12'-5

ALL DIMENSIONS ARE OUT TO OUT.

D = PIN DIAMETER.

R** = INSIDE RADIUS

PIER CONCRETE FINISHING NOTES:

IF FORM TIES ARE USED IN FORMING THE PIER, ARRANGE TIES TO BE REGULARLY SPACED AND IN A CONSISTENT GEOMETRIC GRID PATTERN. DO NOT LOCATE TIES AT EDGES OF CONCRETE RUSTICATIONS.

FOLLOWING FORM REMOVAL, A CLASS 2 STRIP DOWN SURFACE FINISH IN ACCORDANCE WITH ARTICLE 2403, P, 2, B, OF THE STANDARD SPECIFICATIONS SHALL BE REQUIRED BUT WITH THE FOLLOWING ADDITIONAL REQUIREMENTS:

1. DEMONSTRATE HOLE AND VOID PATCHING OPERATIONS IN ACCORDANCE WITH ARTICLE 2403, P, 2, B, OF THE STANDARD SPECIFICATIONS ON A FOUR FOOT SECTION OF VERTICAL PIER CONCRETE LOCATED IN AN INCONSPICUOUS AREA. BEGIN PATCHING DEMONSTRATION BY USING A MORTAR MIX COMPRISED OF 1 PART WHITE CEMENT, 2 PARTS STANDARD PORTLAND CEMENT, 6 PARTS MORTAR SAND, AND WATER. THE QUANTITY OF WATER USED SHALL PRODUCE A MORTAR CONSISTENCY AS DRY AS POSSIBLE TO USE EFFECTIVELY.

2. WHEN PATCHING TEST AREAS HAVE SET, SATURATE WITH WATER AND RUB WITH A FINE CARBORUNDUM STONE UNTIL SURFACES ARE SMOOTH IN TEXTURE. REMOVE LOOSE POWDER AND OTHER CONTAMINANTS BY RUBBING WITH BURLAP AND RINSING WITH WATER. AFTER SURFACES HAVE DRIED, PATCH COLOR AND TEXTURE OF SURFACES WILL BE REVIEWED BY THE ENGINEER. PATCHES SHOULD MATCH OR BE SLIGHTLY LIGHTER THAN SURROUNDING CONCRETE. IF RESULTS ARE UNSATISFACTORY, ADJUST PATCHING MORTAR MIX PROPORTIONS AND PERFORM ANOTHER DEMONSTRATION UNTIL RESULTS ARE DEEMED SATISFACTORY BY THE ENGINEER.

3. USE THE PATCHING MORTAR MIX PROPORTIONS THAT ARE APPROVED BY THE ENGINEER AS A RESULT OF THE SATISFACTORY DEMONSTRATION. DO NOT USE PATCHING MORTAR THAT IS MORE THAN 1 HOUR OLD.

4. FINISHED PIER CONCRETE SHALL BE SMOOTH AND SHOW NO WOOD GRAIN OR OTHER TEXTURE FROM THE FACE OF THE FORMS USED. ALL COSTS FOR REPAIR OR COVERING WOOD GRAIN OR OTHER TEXTURES ON THESE SURFACES SHALL BE THE RESPONSIBILITY OF THE CONTRACTOR.

5. DO NOT APPLY CURING COMPOUNDS, SEALERS, OR OTHER COATINGS TO THE FINISHED PIERS.

ESTIMATED QUANTITIES

ITEM	UNIT	PIER 22C
EXCAVATION, CLASS 20	CY	115
STRUCTURAL CONCRETE (BRIDGE)	CY	44.4
HIGH PERFORMANCE STRUCTURAL CONCRETE	CY	48.1
REINFORCING STEEL	LB	2786
REINFORCING STEEL, EPOXY COATED	LB	32077
PILES, STEEL, HP 14 X 73	LF	405
HP SELF CONSOLIDATING CONCRETE (HP-SCC)	CY	32.0

CONCRETE PLACEMENT QUANTITIES

LOCATION	TYPE	PIER 22C
CAP	HIGH PERFORMANCE STRUCTURAL CONCRETE	48.1
COLUMNS	HP SELF CONSOLIDATING CONCRETE (HP-SCC)	32.0
FOOTINGS	STRUCTURAL CONCRETE (BRIDGE)	44.4

benesch engineers · scientists · planners
Alfred Benesch & Company
205 North Michigan Avenue, Suite 2400
Chicago, Illinois 60601
312-565-0450 Job No. 10061

DESIGN FOR VARIABLE SKEW (L.A.)

278'-8 x 40' CONTINUOUS WELDED GIRDER BRIDGE W/14' BIKE TRAIL

139'-4 END SPAN 139'-4 INTERIOR SPANS

PIER 22C BAR LIST

STA. 3589+46.06, BASELINE U.S. 67 RAMP C TBD

SCOTT COUNTY

IOWA DEPARTMENT OF TRANSPORTATION - HIGHWAY DIVISION

DESIGN SHEET NO. 8 OF 64 FILE NO. 30253 DESIGN NO. 3608

Δ REINFORCING BARS 5c2 ARE TO BE PLACED WITH ABUTMENT AND INCLUDED IN THE SUPERSTRUCTURE QUANTITIES.

*** ELEVATIONS AT FRONT FACE OF BACKWALL

BENCH MARK NO. 500: STA. 6781+18.92 LT. 161.19' ELEV. 575.797, CHISELED "X" IN BOLT E. SIDE CONCRETE STRUCTURE.

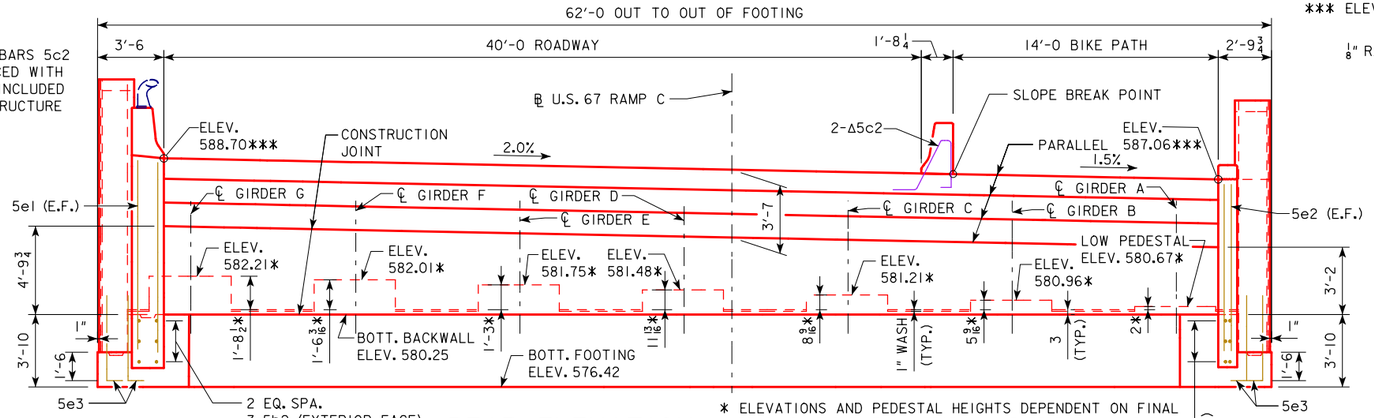

REAR ELEVATION

* ELEVATIONS AND PEDESTAL HEIGHTS DEPENDENT ON FINAL BEARING HEIGHT. FINAL BEARING AND PEDESTAL HEIGHT SHALL BE DETERMINED BY BEARING MANUFACTURER.

BOTT. FOOTING ELEV. MAY NOT BE RAISED. NO ADJUSTMENT TO QUANTTIES WILL BE MADE IF PEDESTAL ELEVATIONS ARE INCREASED.

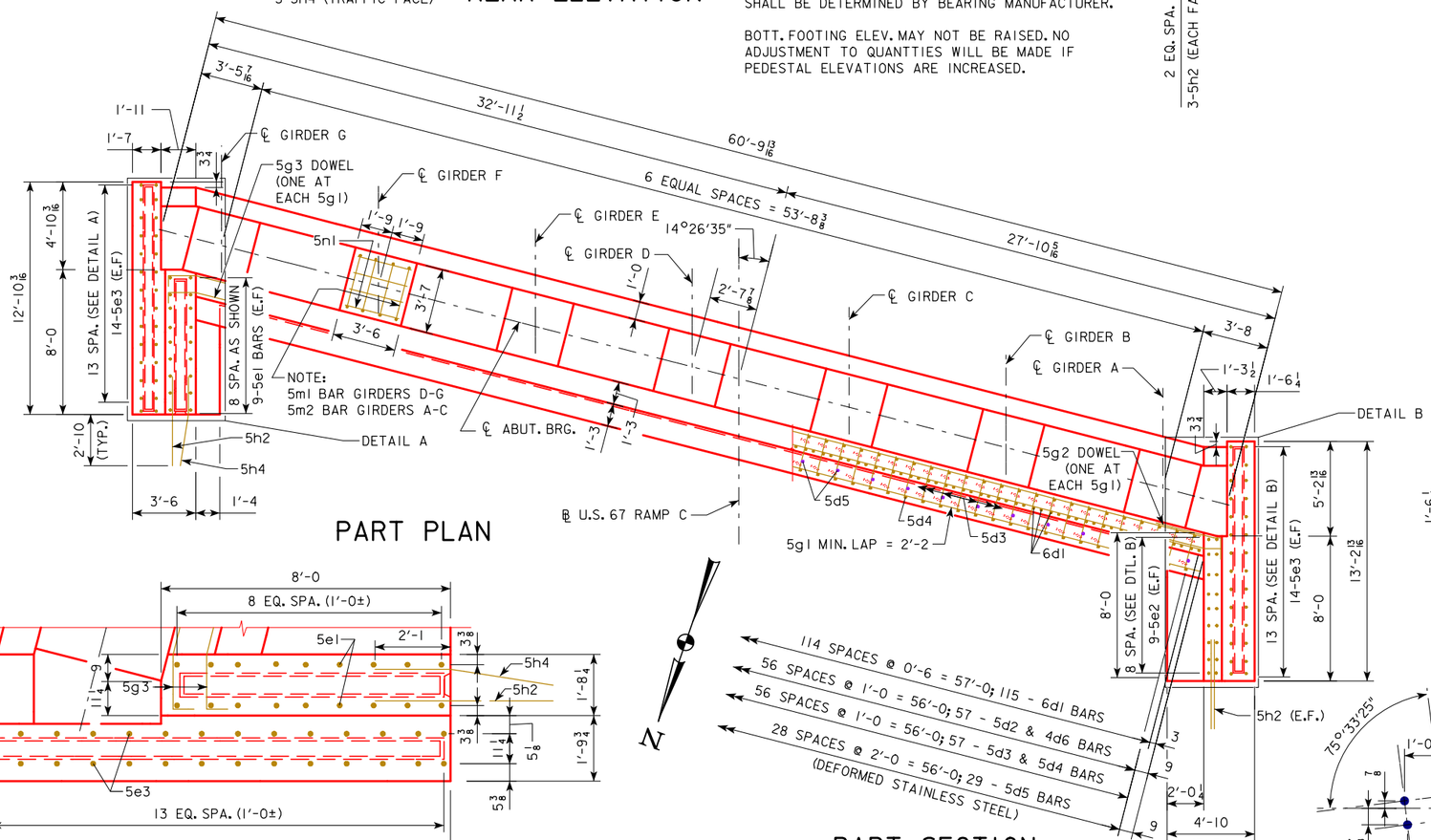

PART PLAN

PART SECTION THROUGH BACKWALL

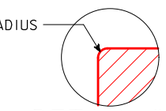

DETAIL "C"

** THIS DIMENSION MAY VARY. TILTING OF THE PAVEMENT SUPPORT SECTION DURING CONSTRUCTION MAY BE NECESSARY TO ACCOMMODATE PROPER SETTING OF THE STRIP SEAL EXPANSION DEVICE OPENING.

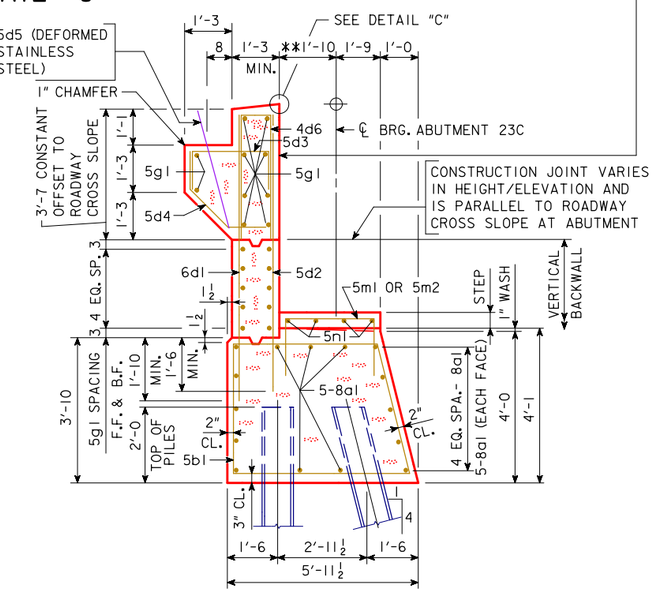

SECTION THROUGH ABUTMENT

EXPANSION DEVICE NOT SHOWN

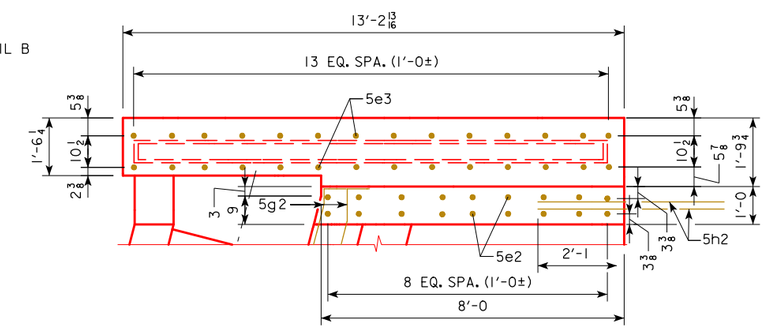

DETAIL B

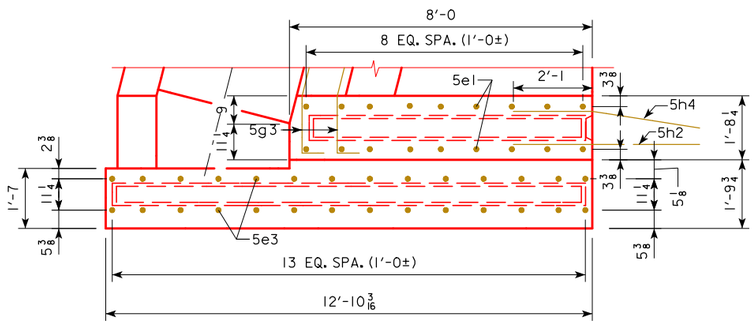

DETAIL A

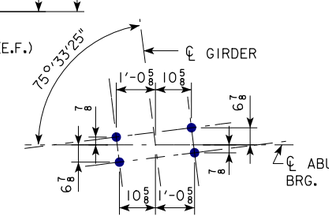

ANCHOR BOLT LAYOUT

NOTES:

WORK THIS SHEET WITH DESIGN SHEETS 4 THRU 18.

REINFORCING BARS MUST BE PLACED TO CLEAR ANCHOR BOLTS. SHIFT REINFORCING BARS SLIGHTLY AS REQUIRED.

DESIGN FOR VARIABLE SKEW (L.A.)

278'-8 x 40' CONTINUOUS WELDED GIRDER BRIDGE W/14' BIKE TRAIL

139'-4 END SPAN — 139'-4 INTERIOR SPANS

ABUTMENT 23C DETAILS

STA. 3589+46.06, BASELINE U.S. 67 RAMP C — TBD

SCOTT COUNTY

IOWA DEPARTMENT OF TRANSPORTATION - HIGHWAY DIVISION

DESIGN SHEET NO. 9 OF 64 FILE NO. 30253 DESIGN NO. 3608

benesch engineers · scientists · planners
Alfred Benesch & Company
205 North Michigan Avenue, Suite 2400
Chicago, Illinois 60601
312-565-0450 Job No. 10061

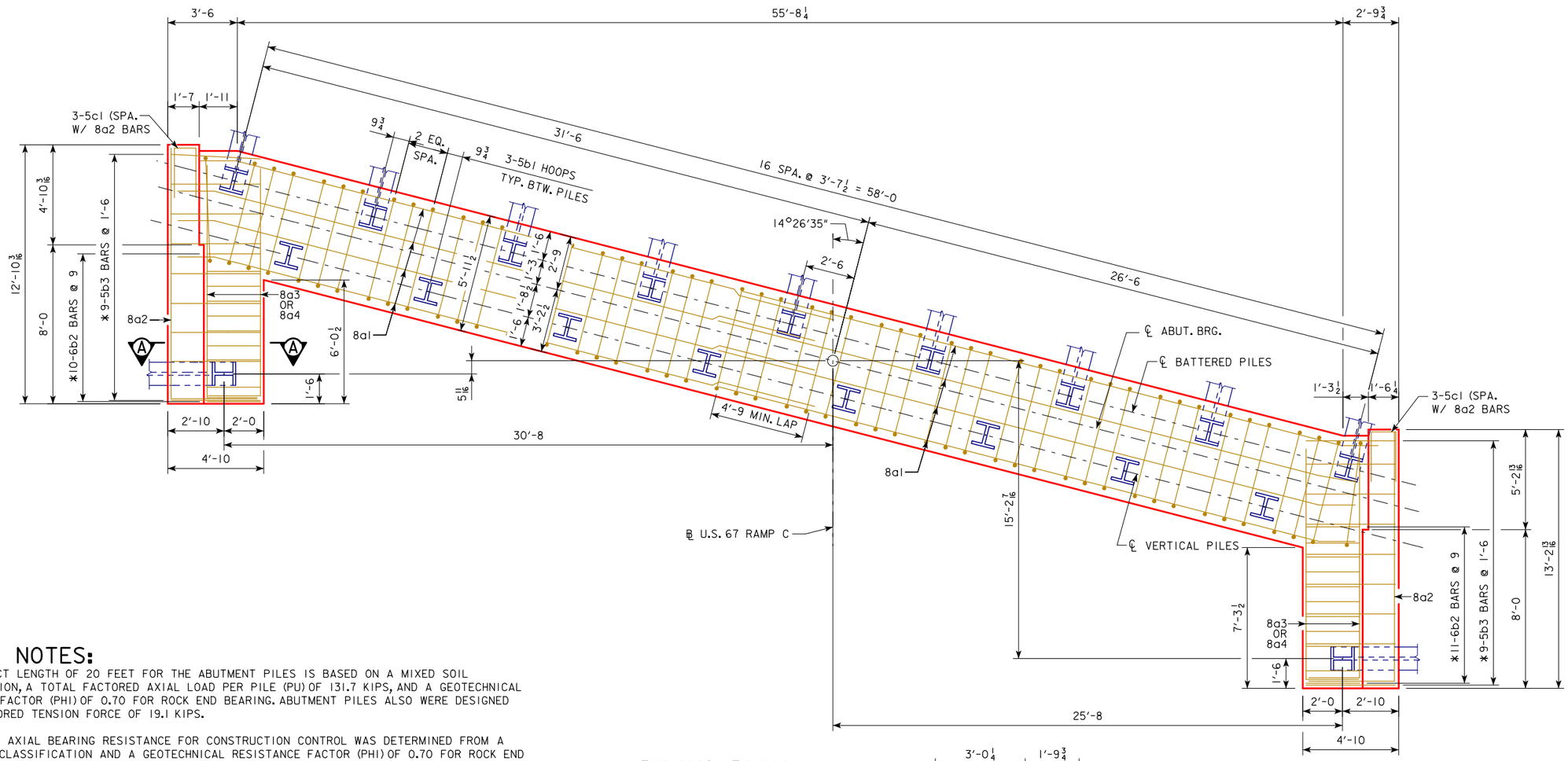

PILING PLAN

(BOTTOM OF FOOTING)

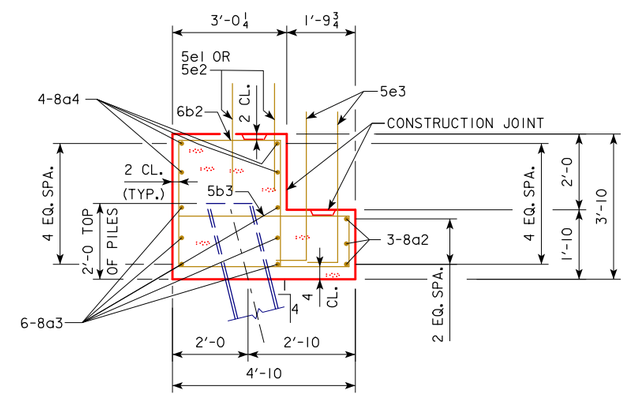

SECTION A-A

PILING NOTES:

THE CONTRACT LENGTH OF 20 FEET FOR THE ABUTMENT PILES IS BASED ON A MIXED SOIL CLASSIFICATION, A TOTAL FACTORED AXIAL LOAD PER PILE (PU) OF 131.7 KIPS, AND A GEOTECHNICAL RESISTANCE FACTOR (PHI) OF 0.70 FOR ROCK END BEARING. ABUTMENT PILES ALSO WERE DESIGNED FOR A FACTORED TENSION FORCE OF 19.1 KIPS.

THE NOMINAL AXIAL BEARING RESISTANCE FOR CONSTRUCTION CONTROL WAS DETERMINED FROM A MIXED SOIL CLASSIFICATION AND A GEOTECHNICAL RESISTANCE FACTOR (PHI) OF 0.70 FOR ROCK END BEARING. PILES ARE ASSUMED TO BE DRIVEN FROM A START ELEVATION AT THE BOTTOM OF FOOTING.

THE REQUIRED NOMINAL AXIAL BEARING RESISTANCE FOR THE ABUTMENT PILES IS 95 TONS AT END OF DRIVE OR RETAP. THE PILE CONTRACT LENGTH SHALL BE DRIVEN AS PER PLAN UNLESS PILES REACH REFUSAL. IN NO CASE SHALL A PILE BE EMBEDDED LESS THAN 16 FEET. CONSTRUCTION CONTROL REQUIRES A WEAP ANALYSIS WITH BEARING GRAPH.

THE DESIGN BEARING FOR THE ABUTMENT PILES IS 95 TONS.

19 - HP14x73 STEEL BEARING PILING (20'-0 LONG) REQUIRED AT THE ABUTMENT.

STEEL PILE POINTS ARE REQUIRED FOR THE STEEL H-PILES AT THE ABUTMENT.

DIMENSIONS SHOWN ON PILING LAYOUT ARE AT BOTTOM OF FOOTING.

BATTER PILES 4:1 IN THE DIRECTION SHOWN.

* ADJUST SPACING TO MISS PILE

benesch engineers · scientists · planners
Alfred Benesch & Company
205 North Michigan Avenue, Suite 2400
Chicago, Illinois 60601
312-565-0450 Job No. 10061

DESIGN FOR VARIABLE SKEW (L.A.)

278'-8 x 40' CONTINUOUS WELDED GIRDER BRIDGE W/14' BIKE TRAIL

139'-4 END SPAN 139'-4 INTERIOR SPANS

ABUTMENT 23C FOOTING DETAILS

STA. 3589+46.06, BASELINE U.S. 67 RAMP C TBD

SCOTT COUNTY

IOWA DEPARTMENT OF TRANSPORTATION - HIGHWAY DIVISION

DESIGN SHEET NO. 10 OF 64 FILE NO. 30253 DESIGN NO. 3608

BENCH MARK NO. 500: STA. 6781+18.92 LT. 161.19' ELEV. 575.797, CHISELED "X" IN BOLT E. SIDE CONCRETE STRUCTURE.

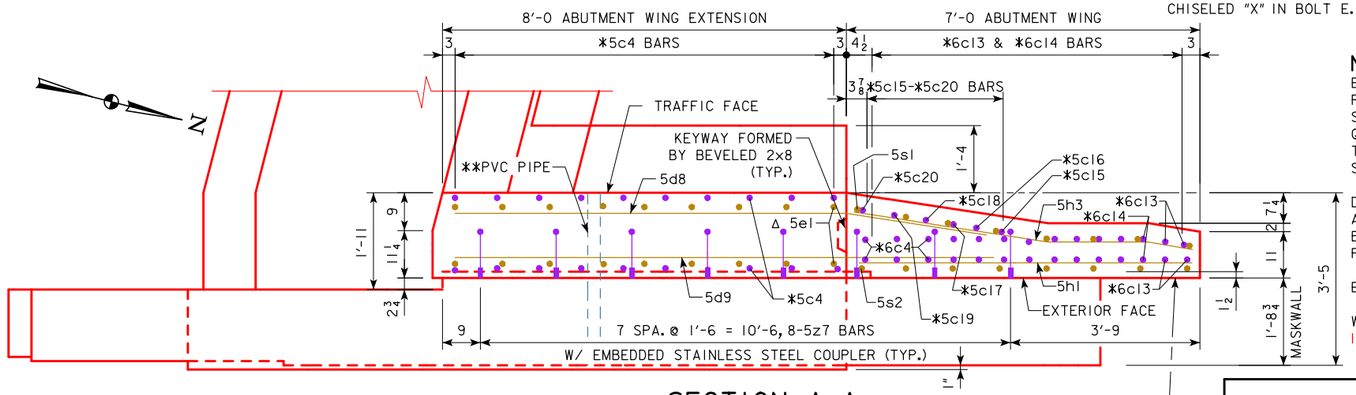

** SEE DESIGN SHEET 29 FOR PVC PIPE LOCATION

SECTION A-A
(AT TOP OF WINGWALL)

EXPOSED AREA OF WINGWALL SHALL BE FINISHED IN ACCORDANCE WITH MASKWALL CONCRETE FINISH NOTES. SEE DESIGN SHEET 17.

NOTES:

EPOXY COATED AND STAINLESS REINFORCING STEEL AND STRUCTURAL CONCRETE (BRIDGE) QUANTITIES ARE TO BE ADDED TO THE SUPERSTRUCTURE QUANTITIES SHOWN ELSEWHERE IN THESE PLANS.

DESIGNATION "-23C" SIGNIFIES BAR ASSOCIATED WITH THE RAMP C BRIDGE. "-23C" NOT SHOWN IN DETAILS FOR CLARITY.

ELEVATIONS TAKEN AT GUTTER LINE.

WORK THIS SHEET WITH DESIGN SHEETS 13 & 14.

EPOXY REINF. BAR LIST - NE ABUT. WING

BAR	LOCATION	SHAPE	NO.	LENGTH	WEIGHT
5d8-23C	WING EXT. HORIZ. TRAFFIC FACE		9	10'-8	100
5d9-23C	WING EXT. HORIZ. EXTERIOR FACE		7	10'-8	78
5s1-23C	VERTICAL TRAFFIC FACE		8	10'-3	86
5s2-23C	VERTICAL EXTERIOR FACE		6	10'-5	65
5h1-23C	HORIZONTAL EXTERIOR FACE		10	6'-6	68
5h3-23C	HORIZONTAL TRAFFIC FACE		12	6'-9	84
				TOTAL (LBS.)	481

STAINLESS STEEL REINFORCING BAR LIST - NE ABUT. WING

BAR	LOCATION	SHAPE	NO.	LENGTH	WEIGHT
5z7-23C	MASKWALL TIES		8	2'-3	19
				TOTAL (LBS.)	19

BENT BAR DETAILS

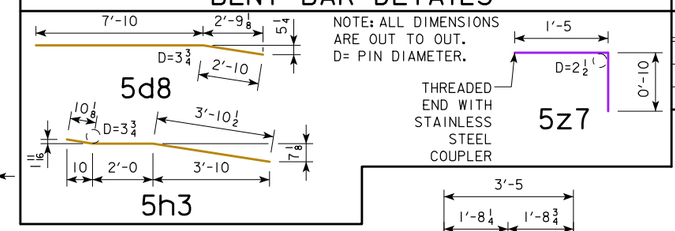

NOTE: ALL DIMENSIONS ARE OUT TO OUT. D= PIN DIAMETER.

CONCRETE PLACEMENT SUMMARY

CONCRETE	TOTAL
NORTHEAST ABUTMENT WING	7.7
TOTAL (CU. YDS.)	7.7

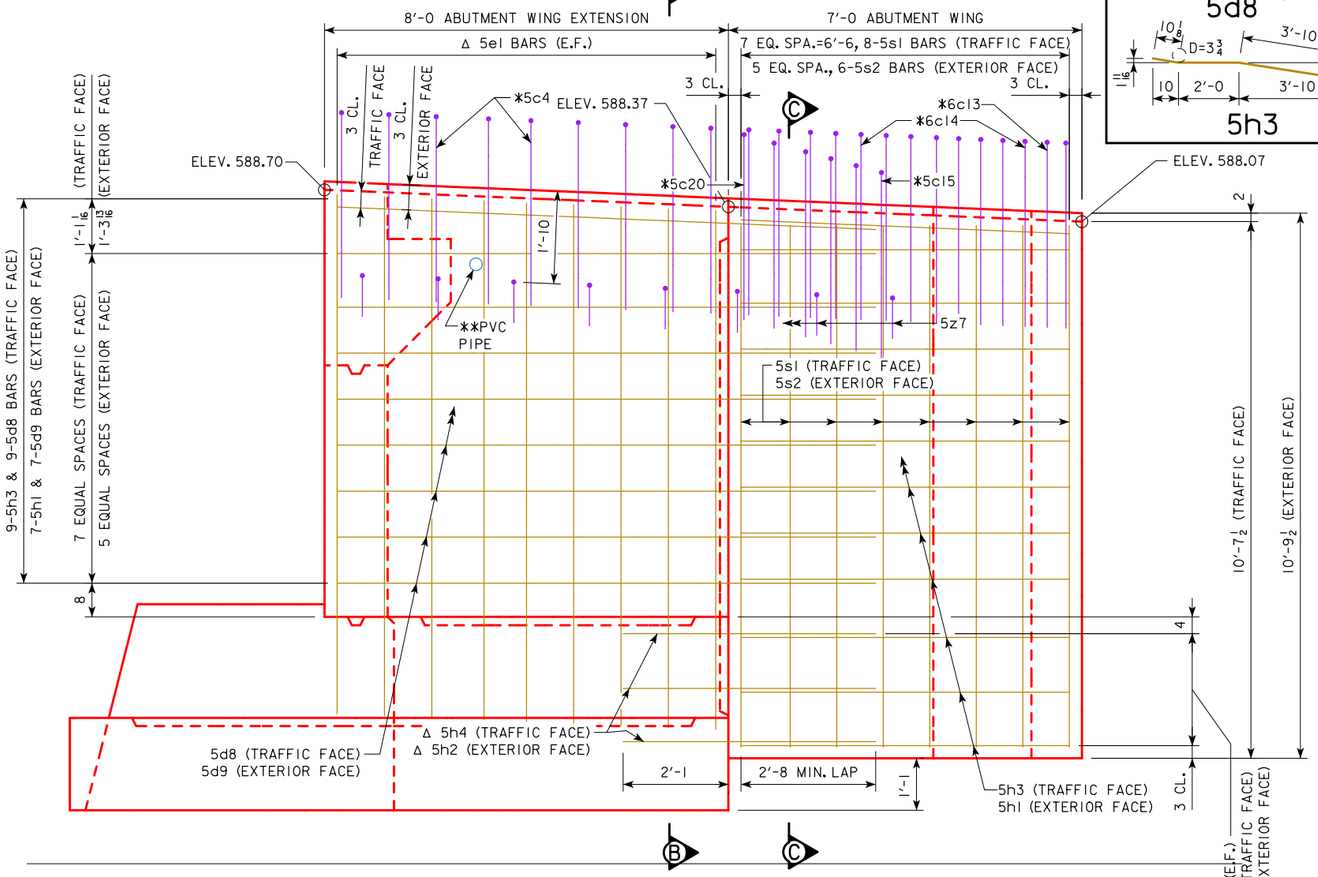

NORTHEAST ABUTMENT WINGWALL - ELEVATION VIEW
(BARRIER AND MASKWALL NOT SHOWN)

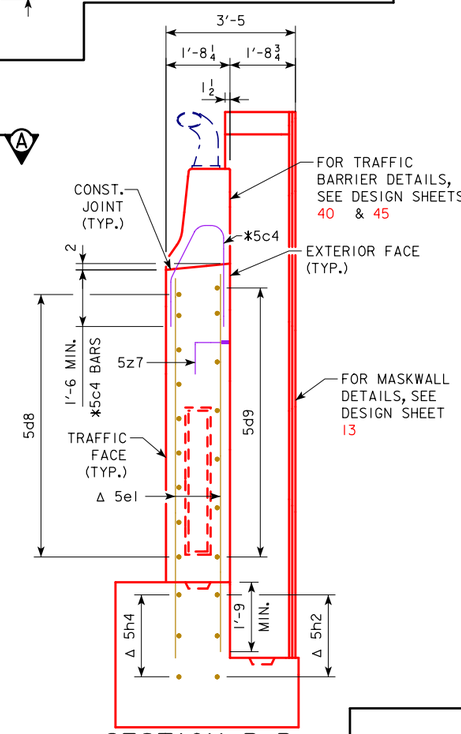

SECTION B-B

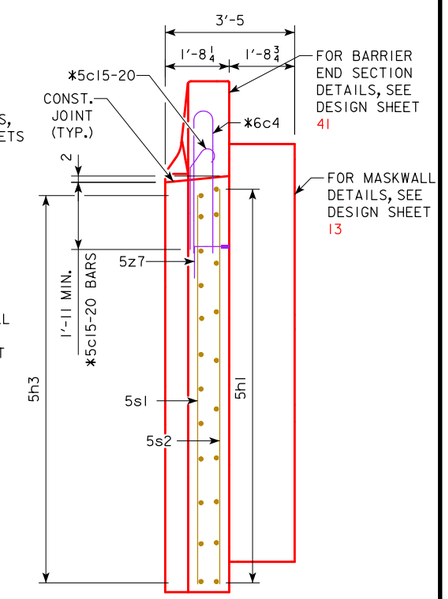

SECTION C-C

* REINFORCING BARS 6c13, 6c14, 5c15-20 & 5c4 ARE TO BE PLACED WITH ABUTMENT WINGWALL AND ARE INCLUDED IN THE SUPERSTRUCTURE QUANTITIES.

Δ REINFORCING BARS 5e1, 5h2 AND 5h4 ARE TO BE PLACED WITH ABUTMENT AND ARE INCLUDED IN THE ABUTMENT 23C QUANTITIES.

DESIGN FOR VARIABLE SKEW (L.A.)

278'-8 x 40' CONTINUOUS WELDED GIRDER BRIDGE W/14' BIKE TRAIL

139'-4 END SPAN 139'-4 INTERIOR SPANS

NE WINGWALL DETAILS

STA. 3589+46.06, BASELINE U.S. 67 RAMP C TBD

SCOTT COUNTY

IOWA DEPARTMENT OF TRANSPORTATION - HIGHWAY DIVISION

DESIGN SHEET NO. 11 OF 64 FILE NO. 30253 DESIGN NO. 3608

benesch engineers · scientists · planners
Alfred Benesch & Company
205 North Michigan Avenue, Suite 2400
Chicago, Illinois 60601
312-565-0450 Job No. 10061

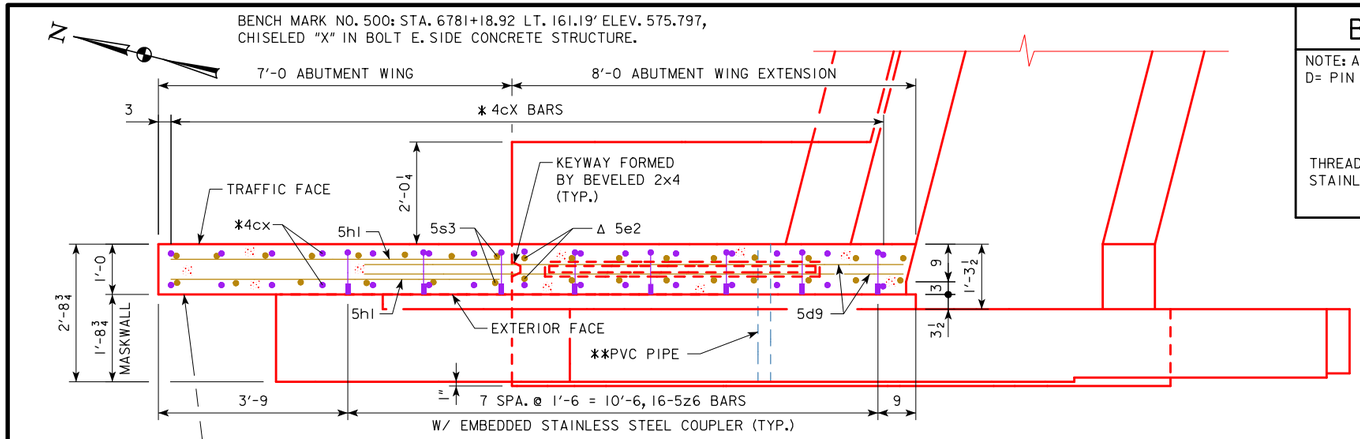

SECTION A-A
(AT TOP OF WINGWALL)

** SEE DESIGN SHEET 29 FOR PVC PIPE LOCATION

BENT BAR DETAILS

NOTE: ALL DIMENSIONS ARE OUT TO OUT.
D= PIN DIAMETER.

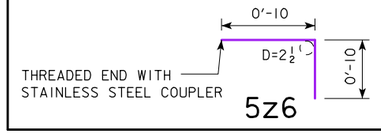

NOTES:

EPOXY COATED AND STAINLESS REINFORCING STEEL AND STRUCTURAL CONCRETE (BRIDGE) QUANTITIES ARE TO BE ADDED TO THE SUPERSTRUCTURE QUANTITIES SHOWN ELSEWHERE IN THESE PLANS.

DESIGNATION "-23C" SIGNIFIES BAR ASSOCIATED WITH THE RAMP C BRIDGE. "-23C" NOT SHOWN IN DETAILS FOR CLARITY.

ELEVATIONS TAKEN AT GUTTER LINE.

WORK THIS SHEET WITH DESIGN SHEETS 15 & 16.

EPOXY REINF. BAR LIST - NW ABUT. WING

BAR	LOCATION	SHAPE	NO.	LENGTH	WEIGHT
5d9-23C	WING EXT. HORIZ. TRAFFIC & EXTERIOR FACE		12	10'-8	134
5s3-23C	VERTICAL TRAFFIC & EXTERIOR FACE		14	8'-7	125
5h1-23C	HORIZONTAL TRAFFIC & EXTERIOR FACE		18	6'-6	122
				TOTAL (LBS.)	381

STAINLESS STEEL REINFORCING BAR LIST - NW ABUT. WING

BAR	LOCATION	SHAPE	NO.	LENGTH	WEIGHT
5z6-23C	MASKWALL TIES		16	1'-8	28
				TOTAL (LBS.)	28

CONCRETE PLACEMENT SUMMARY

CONCRETE	TOTAL
NORTHWEST ABUTMENT WING	4.4
TOTAL (CU. YDS.)	4.4

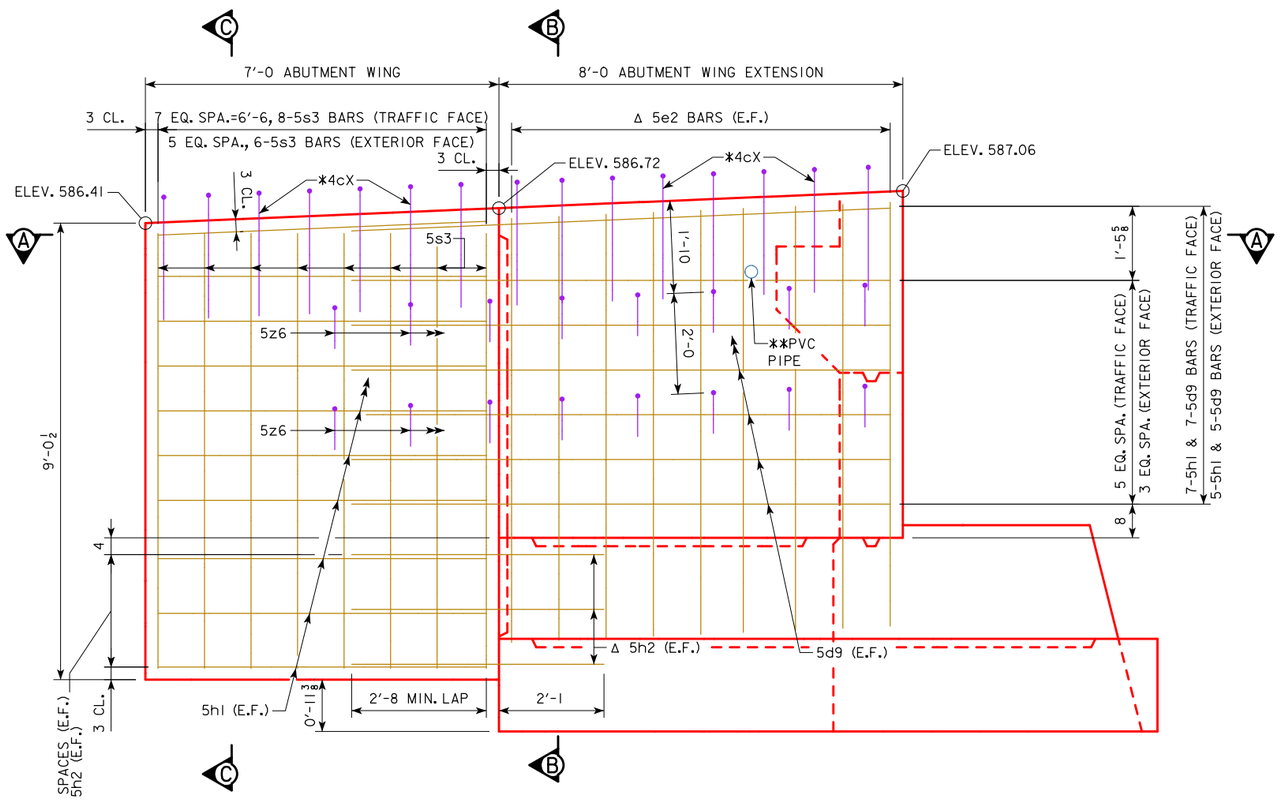

NORTHWEST ABUTMENT WINGWALL - ELEVATION VIEW
(CURB AND MASKWALL NOT SHOWN)

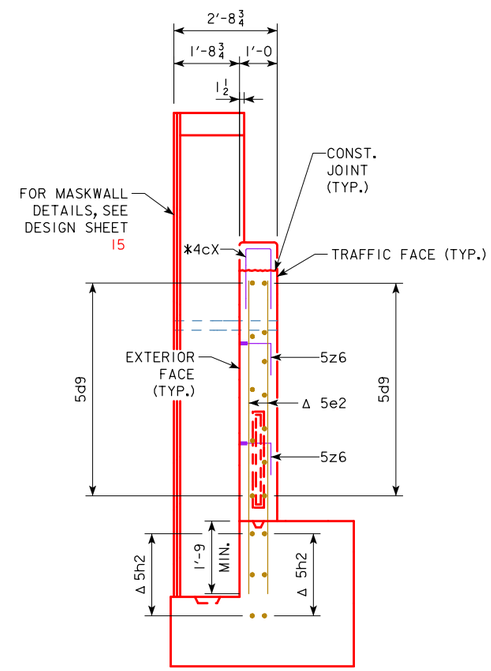

SECTION B-B
(PEDESTRIAN RAIL NOT SHOWN)

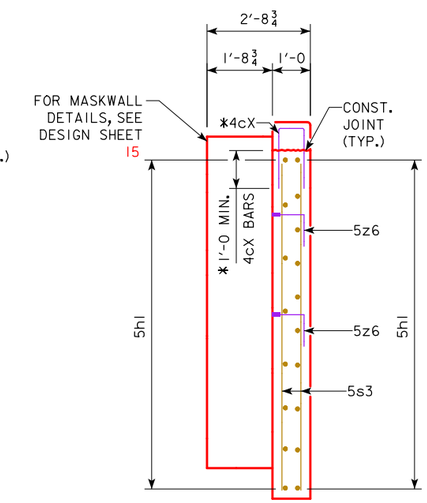

SECTION C-C
(PEDESTRIAN RAIL NOT SHOWN)

* REINFORCING BARS 4cX ARE TO BE PLACED WITH ABUTMENT WINGWALL AND ARE INCLUDED IN THE SUPERSTRUCTURE QUANTITIES.

Δ REINFORCING BARS 5e2 AND 5h2 ARE TO BE PLACED WITH ABUTMENT AND ARE INCLUDED IN THE ABUTMENT 23C QUANTITIES.

DESIGN FOR VARIABLE SKEW (L.A.)

278'-8 x 40' CONTINUOUS WELDED GIRDER BRIDGE W/14' BIKE TRAIL

139'-4 END SPAN 139'-4 INTERIOR SPANS

NW WINGWALL DETAILS

STA. 3589+46.06, BASELINE U.S. 67 RAMP C TBD

SCOTT COUNTY

IOWA DEPARTMENT OF TRANSPORTATION - HIGHWAY DIVISION

DESIGN SHEET NO. 12 OF 64 FILE NO. 30253 DESIGN NO. 3608

benesch engineers · scientists · planners
Alfred Benesch & Company
205 North Michigan Avenue, Suite 2400
Chicago, Illinois 60601
312-565-0450 Job No. 10061

BENCH MARK NO. 500: STA. 6781+18.92 LT. 161.19' ELEV. 575.797, CHISELED "X" IN BOLT E. SIDE CONCRETE STRUCTURE.

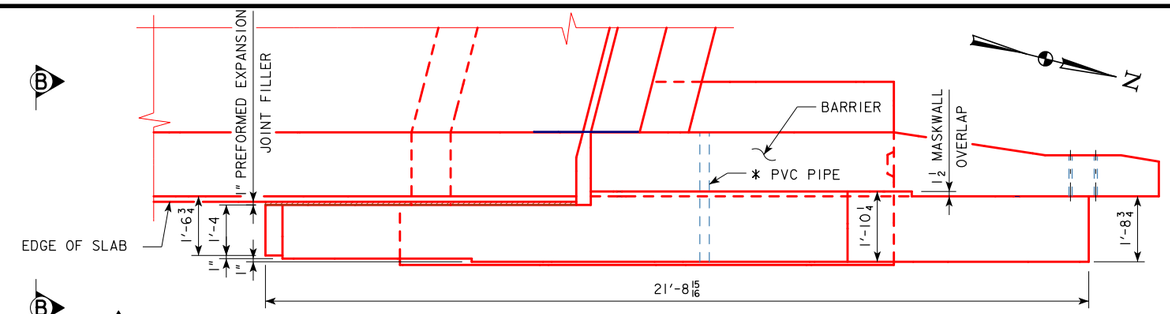

NE MASKWALL PLAN

(STEEL TRAFFIC RAILING NOT SHOWN)

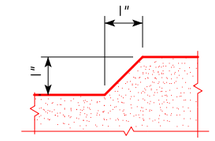

SECTION C-C - CHAMFER

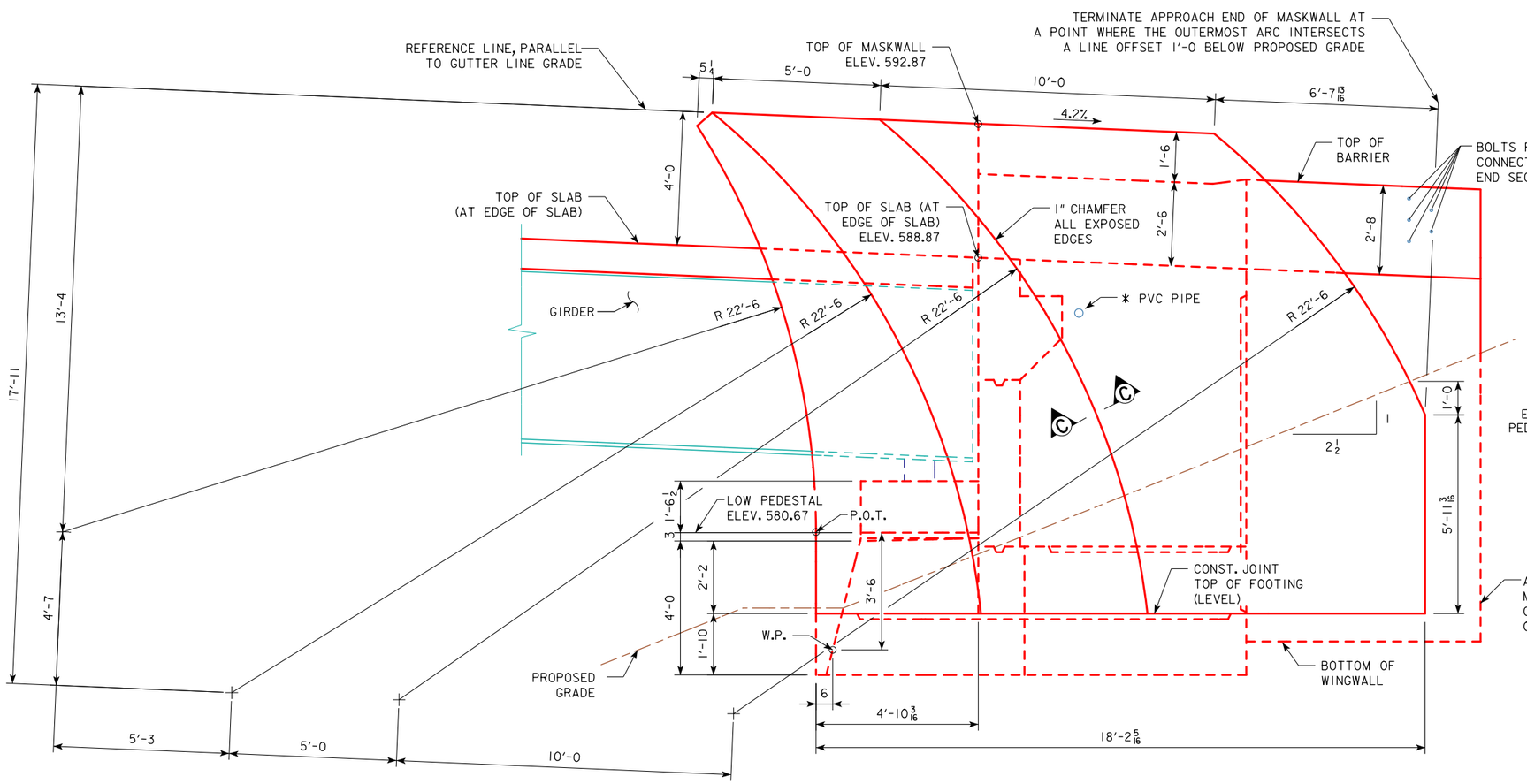

ELEVATION A-A

(STEEL TRAFFIC RAILING NOT SHOWN)

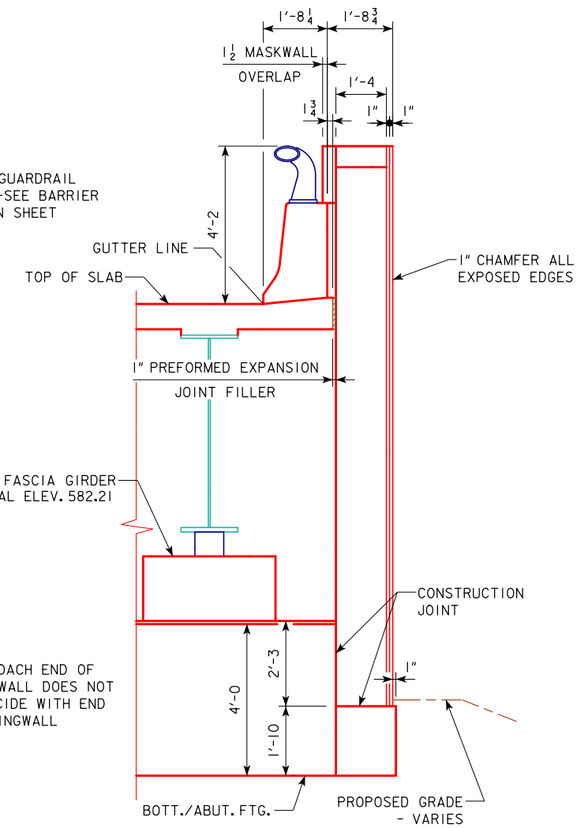

VIEW B-B

NOTES:

SEE DESIGN SHEET 14 FOR REINFORCEMENT.

* SEE DESIGN SHEET 29 FOR PVC PIPE LOCATION

DESIGN FOR VARIABLE SKEW (L.A.)

278'-8 x 40' CONTINUOUS WELDED GIRDER BRIDGE W/14' BIKE TRAIL

139'-4 END SPAN 139'-4 INTERIOR SPANS

NE MASKWALL DETAILS

STA. 3589+46.06, BASELINE U.S. 67 RAMP C TBD

SCOTT COUNTY

IOWA DEPARTMENT OF TRANSPORTATION - HIGHWAY DIVISION

DESIGN SHEET NO. 13 OF 64 FILE NO. 30253 DESIGN NO. 3608

benesch engineers · scientists · planners
Alfred Benesch & Company
205 North Michigan Avenue, Suite 2400
Chicago, Illinois 60601
312-565-0450 Job No. 10061

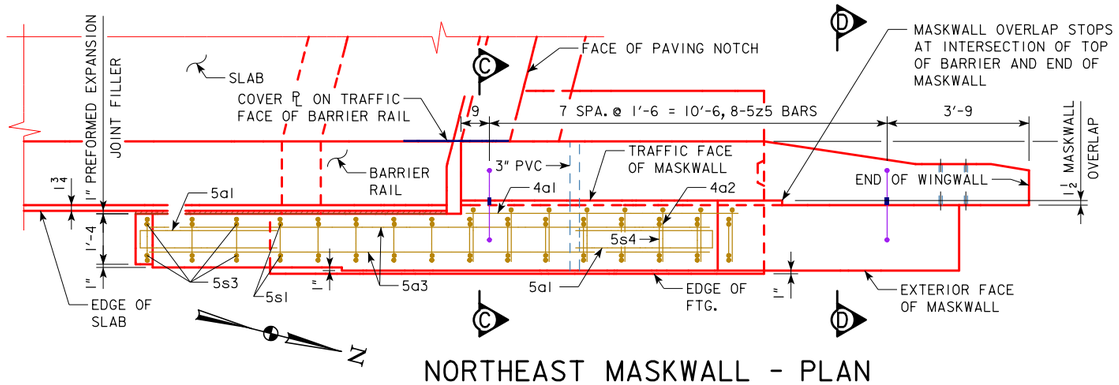

NORTHEAST MASKWALL - PLAN

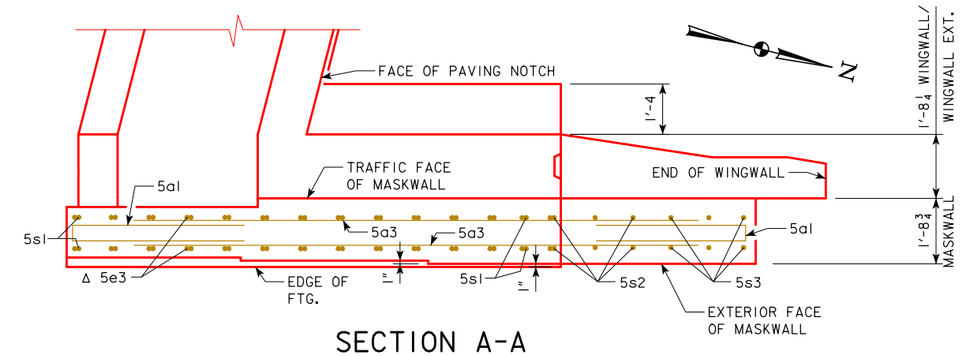

SECTION A-A

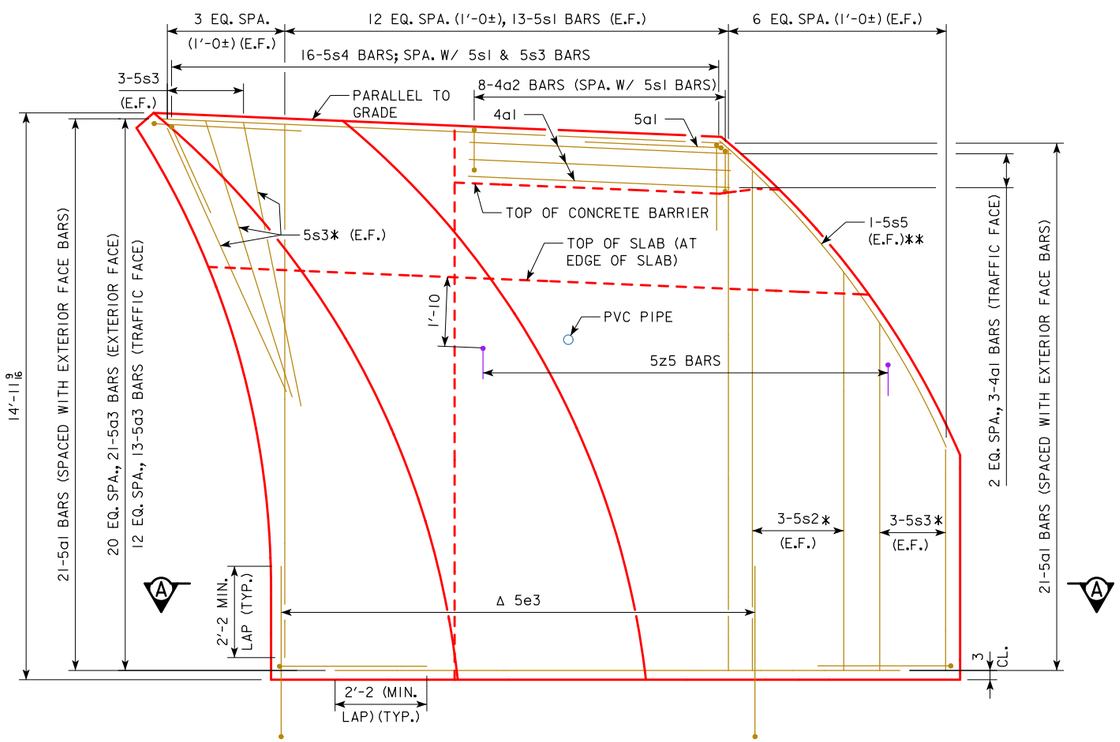

NORTHEAST MASKWALL - ELEVATION

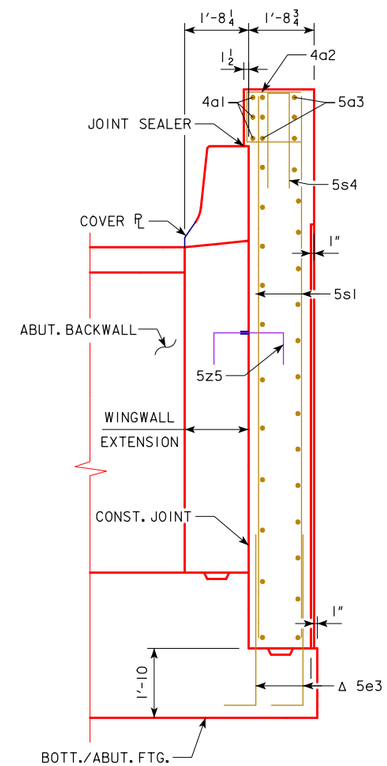

SECTION C-C
(STEEL RAILING NOT SHOWN)

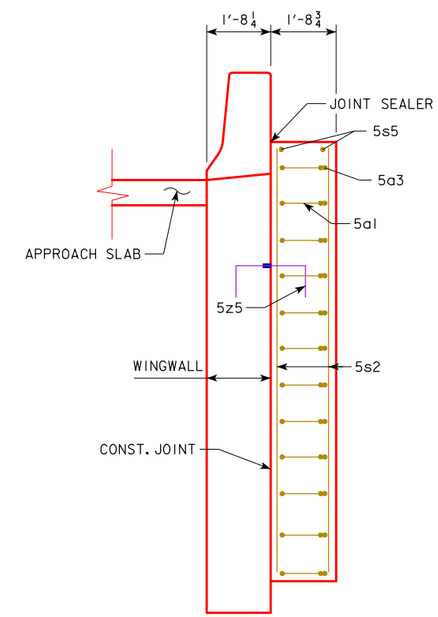

SECTION D-D

NOTES:

SEE DESIGN SHEET 17 FOR BAR LIST AND NOTES.

SEE DESIGN SHEET 10 FOR FOOTING DETAILS.

SEE DESIGN SHEET 11 FOR WINGWALL AND WINGWALL EXTENSION DETAILS.

* CUT IN FIELD AS REQUIRED

** CONTRACTOR MAY BEND IN FIELD

Δ REINFORCING BARS 5e3 ARE TO BE PLACED WITH ABUTMENT AND ARE INCLUDED IN THE ABUTMENT 23C QUANTITIES.

DESIGN FOR VARIABLE SKEW (L.A.)

278'-8 x 40' CONTINUOUS WELDED GIRDER BRIDGE W/14' BIKE TRAIL

139'-4 END SPAN 139'-4 INTERIOR SPANS

NE MASKWALL DETAILS

STA. 3589+46.06, BASELINE U.S. 67 RAMP C TBD

SCOTT COUNTY

IOWA DEPARTMENT OF TRANSPORTATION - HIGHWAY DIVISION

DESIGN SHEET NO. 14 OF 64 FILE NO. 30253 DESIGN NO. 3608

benesch engineers · scientists · planners
Alfred Benesch & Company
205 North Michigan Avenue, Suite 2400
Chicago, Illinois 60601
312-565-0450 Job No. 10061

2:23:06 PM untitled c:\pwise_work\do_not_delete\dms05641\82074200.brg
MODEL: $MODEL

BENCH MARK NO. 500: STA. 6781+18.92 LT. 161.19' ELEV. 575.797,
CHISELED "X" IN BOLT E. SIDE CONCRETE STRUCTURE.

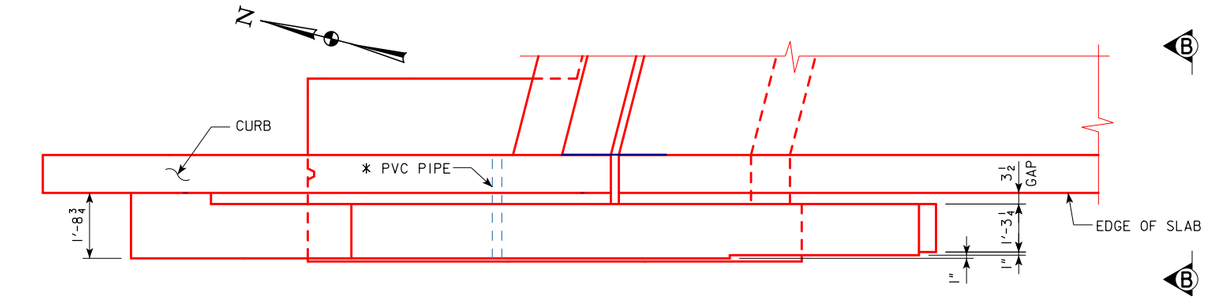

NW MASKWALL PLAN
(PEDESTRIAN RAILING NOT SHOWN)

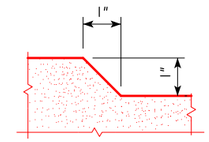

SECTION C-C - CHAMFER

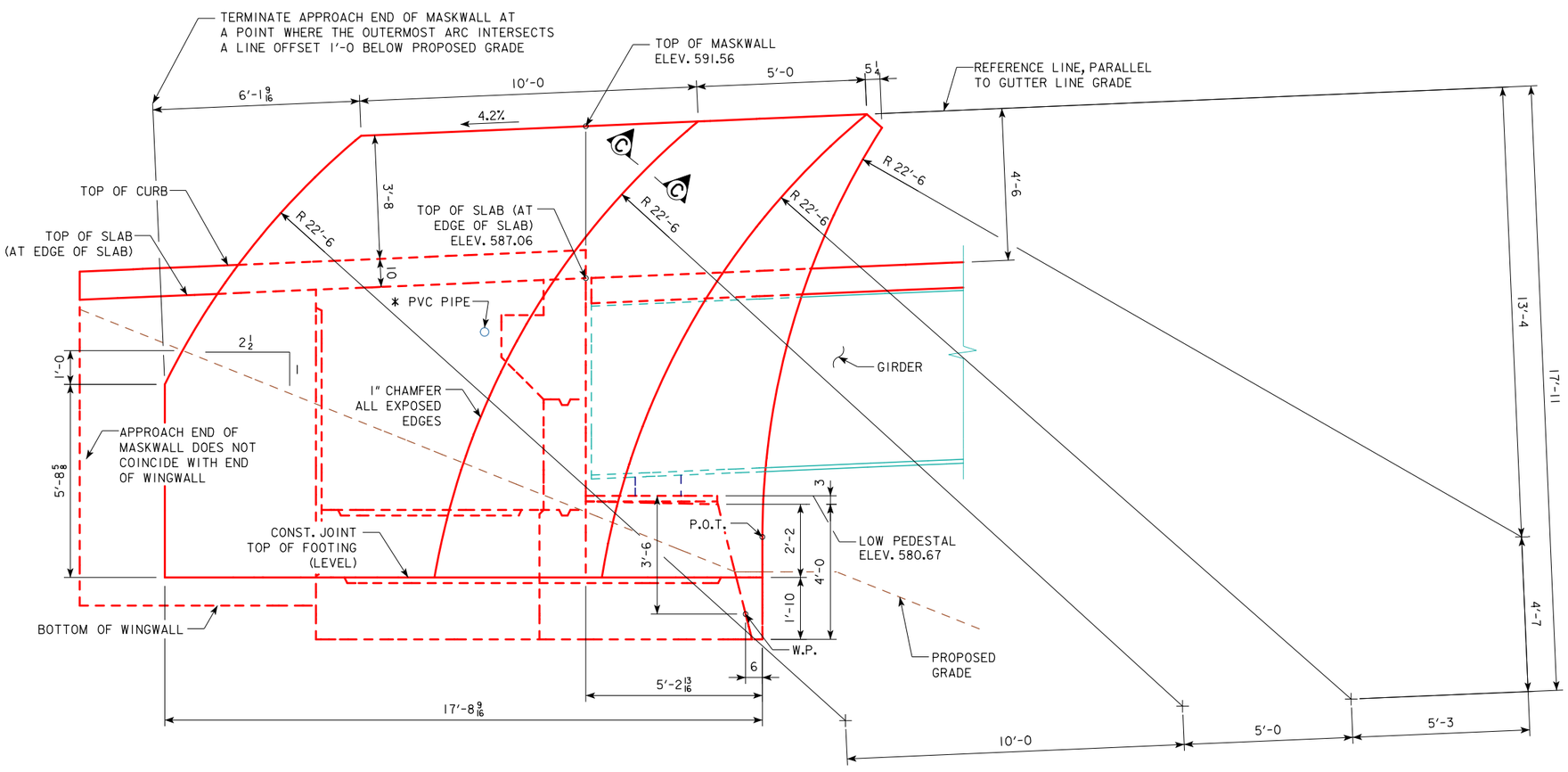

ELEVATION A-A
(PEDESTRIAN RAILING NOT SHOWN)

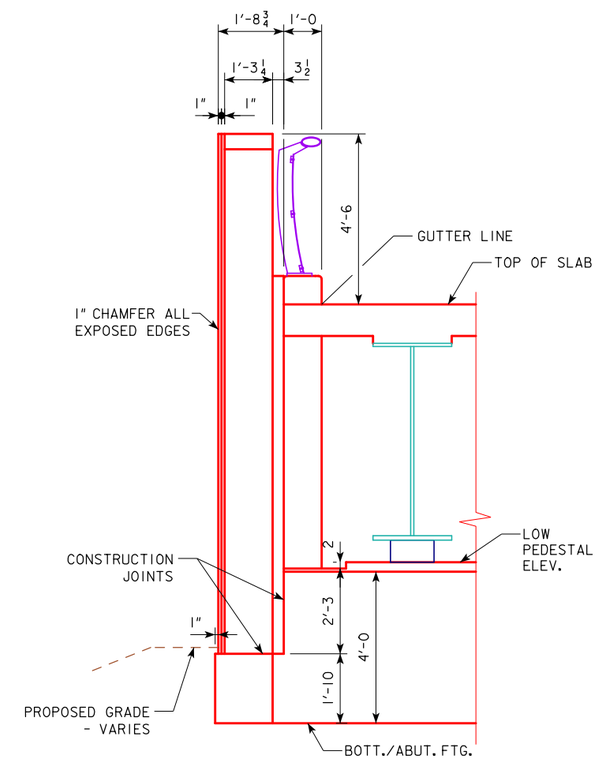

VIEW B-B

NOTES:
SEE DESIGN SHEET 16 FOR REINFORCEMENT.

* SEE DESIGN SHEET 29 FOR PVC PIPE LOCATION

DESIGN FOR VARIABLE SKEW (L.A.)

278'-8 x 40' CONTINUOUS WELDED GIRDER BRIDGE W/14' BIKE TRAIL

139'-4 END SPAN 139'-4 INTERIOR SPANS

NW MASKWALL DETAILS

STA. 3589+46.06, BASELINE U.S. 67 RAMP C TBD

SCOTT COUNTY

IOWA DEPARTMENT OF TRANSPORTATION - HIGHWAY DIVISION

DESIGN SHEET NO. 15 OF 64 FILE NO. 30253 DESIGN NO. 3608

benesch engineers · scientists · planners
Alfred Benesch & Company
205 North Michigan Avenue, Suite 2400
Chicago, Illinois 60601
312-565-0450 Job No. 10061

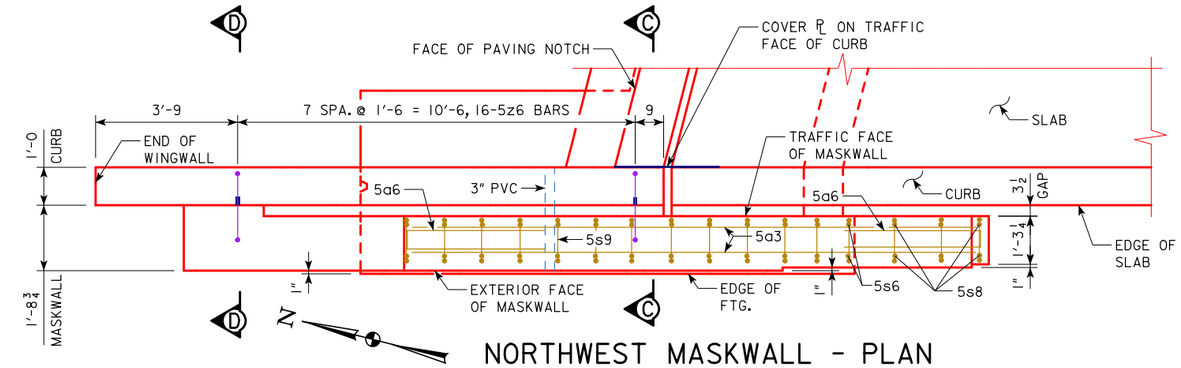

NORTHWEST MASKWALL - PLAN

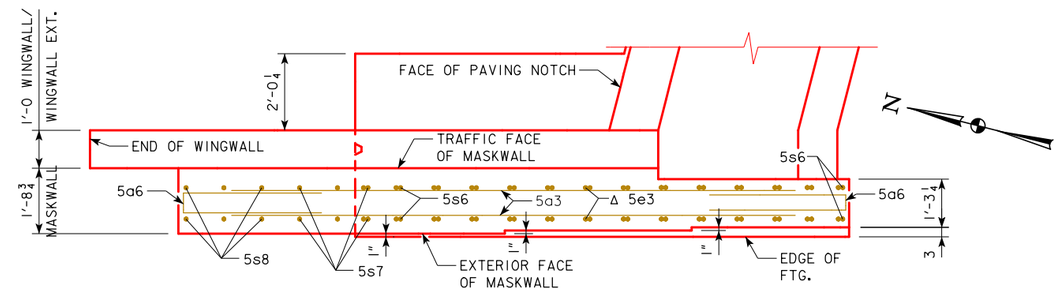

SECTION A-A

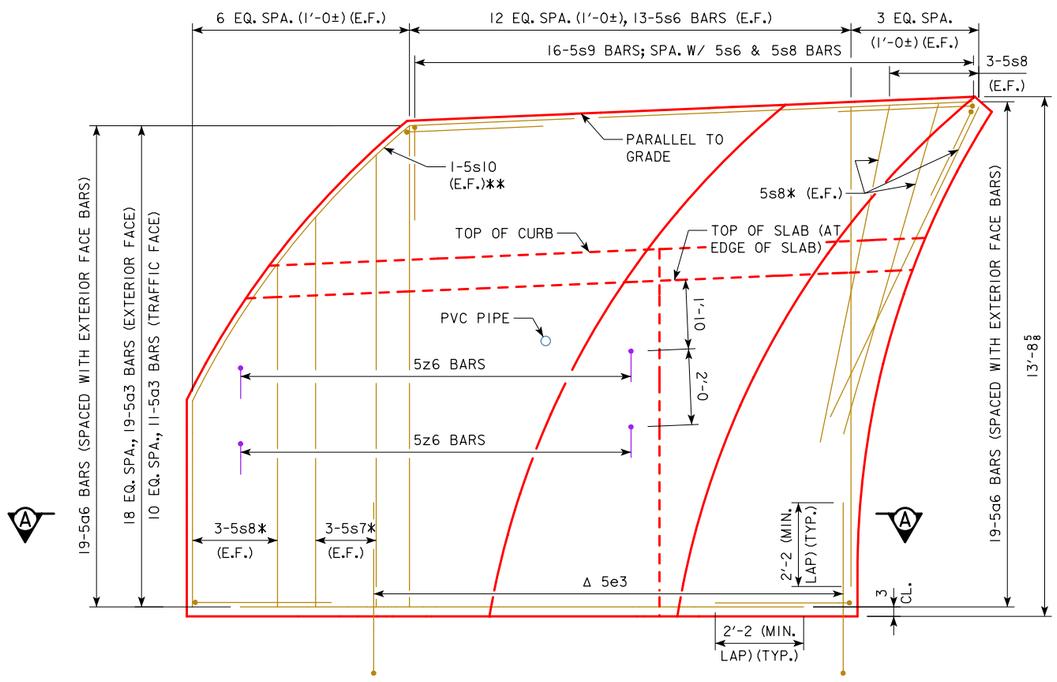

NORTHWEST MASKWALL - ELEVATION

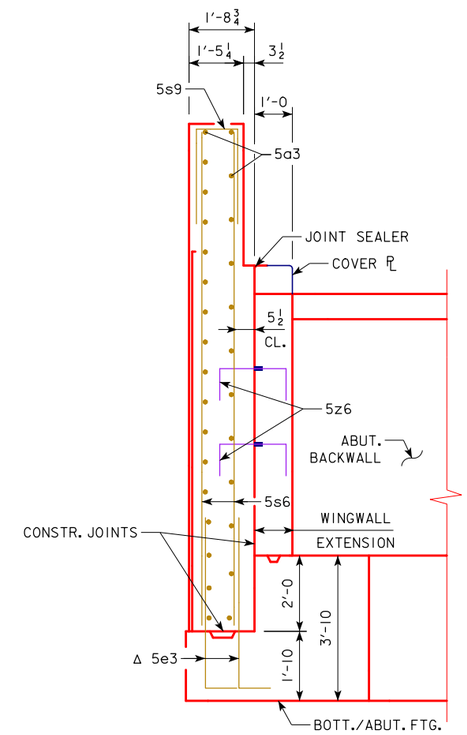

SECTION C-C

(STEEL RAILING NOT SHOWN)

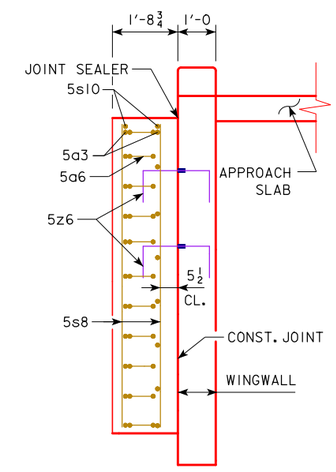

SECTION D-D

(STEEL RAILING NOT SHOWN)

NOTES:

SEE DESIGN SHEET 17 FOR BAR LIST AND NOTES.

SEE DESIGN SHEET 10 FOR FOOTING DETAILS.

SEE DESIGN SHEET 12 FOR WINGWALL AND WINGWALL EXTENSION DETAILS.

* CUT IN FIELD AS REQUIRED

** CONTRACTOR MAY BEND IN FIELD

Δ REINFORCING BARS 5e3 ARE TO BE PLACED WITH ABUTMENT AND ARE INCLUDED IN THE ABUTMENT 23C QUANTITIES.

DESIGN FOR VARIABLE SKEW (L.A.)

278'-8 x 40' CONTINUOUS WELDED GIRDER BRIDGE W/14' BIKE TRAIL

139'-4 END SPAN 139'-4 INTERIOR SPANS

NW MASKWALL DETAILS

STA. 3589+46.06, BASELINE U.S. 67 RAMP C TBD

SCOTT COUNTY

IOWA DEPARTMENT OF TRANSPORTATION - HIGHWAY DIVISION

DESIGN SHEET NO. 16 OF 64 FILE NO. 30253 DESIGN NO. 3608

benesch engineers · scientists · planners
Alfred Benesch & Company
205 North Michigan Avenue, Suite 2400
Chicago, Illinois 60601
312-565-0450 Job No. 10061

2:23:20 PM untitled c:\pwise_work\do_not_delete\dms05641\82074200.brg
MODEL: $MODEL

MASKWALL CONCRETE FINISH NOTES:

IF FORM TIES ARE USED IN FORMING THE MASKWALL, ARRANGE TIES TO BE REGULARLY SPACED AND IN A CONSISTENT GEOMETRIC GRID PATTERN. DO NOT LOCATE TIES AT EDGES OF CONCRETE RUSTUCATIONS.

FOLLOWING FORM REMOVAL, A CLASS 2 STRIP DOWN SURFACE FINISH IN ACCORDANCE WITH ARTICLE 2403, P, 2, B, OF THE STANDARD SPECIFICATIONS SHALL BE REQUIRED BUT WITH THE FOLLOWING ADDITIONAL REQUIREMENTS:

1. DEMONSTRATE HOLE AND VOID PATCHING OPERATIONS IN ACCORDANCE WITH ARTICLE 2403, P, 2, B, OF THE STANDARD SPECIFICATIONS ON A FOUR FOOT SECTION OF VERTICAL MASKWALL LOCATED IN AN INCONSPICUOUS AREA. BEGIN PATCHING DEMONSTRATION BY USING A MORTAR MIX COMPRISED OF 1 PART WHITE CEMENT, 2 PARTS STANDARD PORTLAND CEMENT, 6 PARTS MORTAR SAND, AND WATER. THE QUANTITY OF WATER USED SHALL PRODUCE A MORTAR CONSISTENCY AS DRY AS POSSIBLE TO USE EFFECTIVELY.

2. WHEN PATCHING TEST AREAS HAVE SET, SATURATE WITH WATER AND RUB WITH A FINE CARBORUNDUM STONE UNTIL SURFACES ARE SMOOTH IN TEXTURE. REMOVE LOOSE POWDER AND OTHER CONTAMINANTS BY RUBBING WITH BURLAP AND RINSING WITH WATER. AFTER SURFACES HAVE DRIED, PATCH COLOR AND TEXTURE OF SURFACES WILL BE REVIEWED BY THE ENGINEER. PATCHES SHOULD MATCH OR BE SLIGHTLY LIGHTER THAN SURROUNDING CONCRETE. IF RESULTS ARE UNSATISFACTORY, ADJUST PATCHING MORTAR MIX PROPORTIONS AND PERFORM ANOTHER DEMONSTRATION UNTIL RESULTS ARE DEEMED SATISFACTORY BY THE ENGINEER.

3. USE THE PATCHING MORTAR MIX PROPORTIONS THAT ARE APPROVED BY THE ENGINEER AS A RESULT OF THE SATISFACTORY DEMONSTRATION. DO NOT USE PATCHING MORTAR THAT IS MORE THAN 1 HOUR OLD.

FINISHED MASKWALL CONCRETE SHALL BE SMOOTH AND SHOW NO WOOD GRAIN OR OTHER TEXTURE FROM THE FACE OF THE FORMS USED. ALL COSTS FOR REPAIR OR COVERING WOOD GRAIN OR OTHER TEXTURES ON THESE SURFACES SHALL BE THE RESPONSIBILITY OF THE CONTRACTOR.

FOR ANTI-GRAFFITI COATING APPLIED TO MASKWALLS, SEE DESIGN SHEET 64.

NOTES:

DESIGNATION "-C" SIGNIFIES BAR ASSOCIATED WITH THE RAMP C BRIDGE. "-C" NOT SHOWN IN DETAILS FOR CLARITY.

SEE ABUTMENT NOTES ON DESIGN SHEET 18 .

TWO INCH CLEAR CONCRETE COVER UNLESS NOTED OTHERWISE.

THE JOINT SEALER SHALL BE LIGHT GRAY NONSAG LATEX CAULKING SEALER MARKETED FOR OUTDOOR USE. NO TESTING OR CERTIFICATION IS REQUIRED. COST OF THE JOINT SEALER SHALL BE CONSIDERED INCIDENTAL TO OTHER CONSTRUCTION.

FINISH EXPOSED SURFACE OF ABUTMENT WINGWALL AND EXTERIOR FACE OF BARRIER END SECTION IN ACCORDANCE WITH THE 'MASKWALL CONCRETE FINISH NOTES'.

CONTRACTOR SHALL EXERCISE ALL DUE CARE TO ASSURE THAT THE MASKWALL SURFACE FINISH IS INTACT AND THE OVERALL APPEARANCE IS AESTHETICALLY PLEASING AT COMPLETION OF THE PROJECT. IF THE MASKWALLS ARE CONSTRUCTED BEFORE THE DECK, APPROACH SLAB OR BARRIER RAILINGS, ADDITIONAL EFFORT MAY BE REQUIRED IN FORMING AND PLACING THE DECK, APPROACH SLAB AND/OR BARRIER CONCRETE, AND PRECAUTIONS SHALL BE TAKEN TO PROTECT THE MASKWALLS DURING THESE OPERATIONS. IF THE MASKWALLS ARE CONSTRUCTED AFTER DECK, APPROACH SLAB OR BARRIER RAILINGS, TEMPORARY EARTH RETENTION MAY BE REQUIRED. IN EITHER CASE, ANY COSTS FOR PROTECTING THE MASKWALLS, WORKING AROUND THEM OR TEMPORARY EARTH RETENTION AND FINAL GRADING SHALL BE INCLUDED IN THE COST OF HIGH PERFORMANCE STRUCTURAL CONCRETE.

EPOXY REINF. BAR LIST - NE MASKWALL

BAR	LOCATION	SHAPE	NO.	LENGTH	WEIGHT
5a1-23C	HORIZONTAL END		42	8'-11	391
5a3-23C	HORIZONTAL		34	14'-10	526
4a1-23C	HORIZONTAL		3	6'-10	14
4a2-23C	HORIZONTAL TOP		8	4'-0	21
5s1-23C	VERTICAL		26	14'-1	382
5s2-23C	VERTICAL		6	12'-9	80
5s3-23C	VERTICAL		12	9'-8	121
5s4-23C	VERTICAL-TOP		16	6'-0	100
5s5-23C	CURVED VERTICAL		2	10'-6	22
				TOTAL (LBS.)	1657

STAINLESS STEEL REINFORCING BAR LIST - NE MASKWALL

BAR	LOCATION	SHAPE	NO.	LENGTH	WEIGHT
5z5-23C	MASKWALL TIES		8	1'-9	15
				TOTAL (LBS.)	15

HIGH PERFORMANCE STRUCTURAL CONCRETE PLACEMENT SUMMARY

ITEM	UNIT	TOTAL
MASKWALL 1 @ 15.4 CU. YD. (PORTION ABOVE FOOTING)	CU. YD.	15.4

BENT BAR DETAILS

BAR	A	B
5a1	4'-0	0'-10 3/4
5s4	2'-6	1'-0

NOTE: ALL DIMENSIONS ARE OUT TO OUT.
D= PIN DIAMETER.

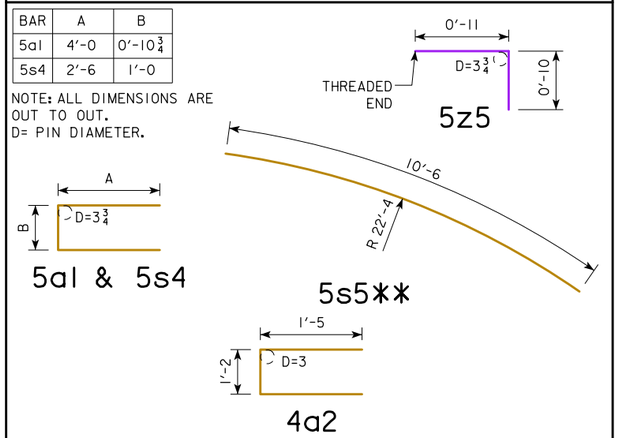

EPOXY REINF. BAR LIST - NW MASKWALL

BAR	LOCATION	SHAPE	NO.	LENGTH	WEIGHT
5a3-23C	HORIZONTAL		30	14'-10	464
5a6-23C	HORIZONTAL END		38	8'-10	350
5s6-23C	VERTICAL		26	12'-8	343
5s7-23C	VERTICAL		6	11'-11	75
5s8-23C	VERTICAL		12	9'-0	113
5s9-23C	VERTICAL-TOP		16	6'-0	100
5s10-23C	CURVED VERTICAL		2	9'-4	19
				TOTAL (LBS.)	1465

STAINLESS STEEL REINFORCING BAR LIST - NW MASKWALL

BAR	LOCATION	SHAPE	NO.	LENGTH	WEIGHT
5z6-23C	MASKWALL TIES		16	1'-8	28
				TOTAL (LBS.)	28

HIGH PERFORMANCE STRUCTURAL CONCRETE PLACEMENT SUMMARY

ITEM	UNIT	TOTAL
MASKWALL 1 @ 14.3 CU. YD. (PORTION ABOVE FOOTING)	CU. YD.	14.3

BENT BAR DETAILS

BAR	A	B
5a6	4'-0	0'-10
5s9	2'-6	0'-11 1/4

NOTE: ALL DIMENSIONS ARE OUT TO OUT.
D= PIN DIAMETER.

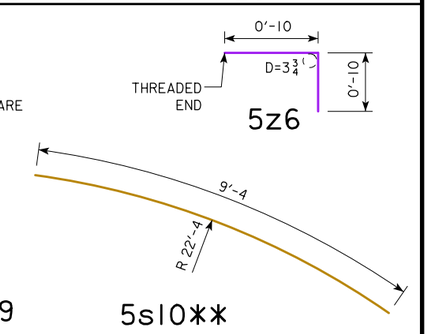

** CONTRACTOR MAY BEND IN FIELD

DESIGN FOR VARIABLE SKEW (L.A.)

278'-8 x 40' CONTINUOUS WELDED GIRDER BRIDGE W/14' BIKE TRAIL

139'-4 END SPAN 139'-4 INTERIOR SPANS

MASKWALL DETAILS

STA. 3589+46.06, BASELINE U.S. 67 RAMP C TBD

SCOTT COUNTY

IOWA DEPARTMENT OF TRANSPORTATION - HIGHWAY DIVISION

DESIGN SHEET NO. 17 OF 64 FILE NO. 30253 DESIGN NO. 3608

benesch engineers · scientists · planners
Alfred Benesch & Company
205 North Michigan Avenue, Suite 2400
Chicago, Illinois 60601
312-565-0450 Job No. 10061

ABUTMENT NOTES:

MINIMUM CLEAR DISTANCE FROM FACE OF CONCRETE TO NEAR REINFORCING BAR IS TO BE 2" UNLESS OTHERWISE NOTED OR SHOWN.

CONSTRUCTION JOINT KEYWAYS ARE TO BE FORMED WITH BEVELED 2x6's UNLESS NOTED OTHERWISE.

THE PORTION OF THE BACKWALL CONTAINING THE ABUTMENT ANCHORAGE OF THE EXPANSION DEVICE IS TO BE PLACED AFTER THE BRIDGE FLOOR IS PLACED.

CONCRETE SEALER SHALL BE APPLIED TO THE ABUTMENT BRIDGE SEAT IN ACCORDANCE WITH ARTICLE 2403.03, P, 3 OF THE STANDARD SPECIFICATIONS. IN ADDITION TO THE REQUIREMENTS OF ARTICLE 2403.03, P, 3, SEALER SHALL BE APPLIED TO THE WASH BETWEEN THE BRIDGE SEAT STEPS.

BEAMS AND MASONRY PLATES ARE TO BE SET BEFORE BACKWALL IS PLACED.

THE COST OF PREFORMED EXPANSION JOINT FILLER, AND COST OF FURNISHING AND PLACING CONCRETE SEALER IS TO BE INCLUDED IN THE PRICE BID FOR "HIGH PERFORMANCE STRUCTURAL CONCRETE".

PAVING NOTCH DOWELS SHALL BE STAINLESS STEEL DEFORMED BAR GRADE 60, MEETING THE REQUIREMENTS OF MATERIALS I.M. 452.

IF NECESSARY TO PREVENT DAMAGE TO THE END OF THE BRIDGE DECK OR BACKWALL FROM CONSTRUCTION EQUIPMENT, AN APPROPRIATE METHOD OF PROTECTION APPROVED BY THE ENGINEER SHALL BE PROVIDED BY THE BRIDGE CONTRACTOR AT NO EXTRA COST TO THE STATE.

BENT BAR DETAILS

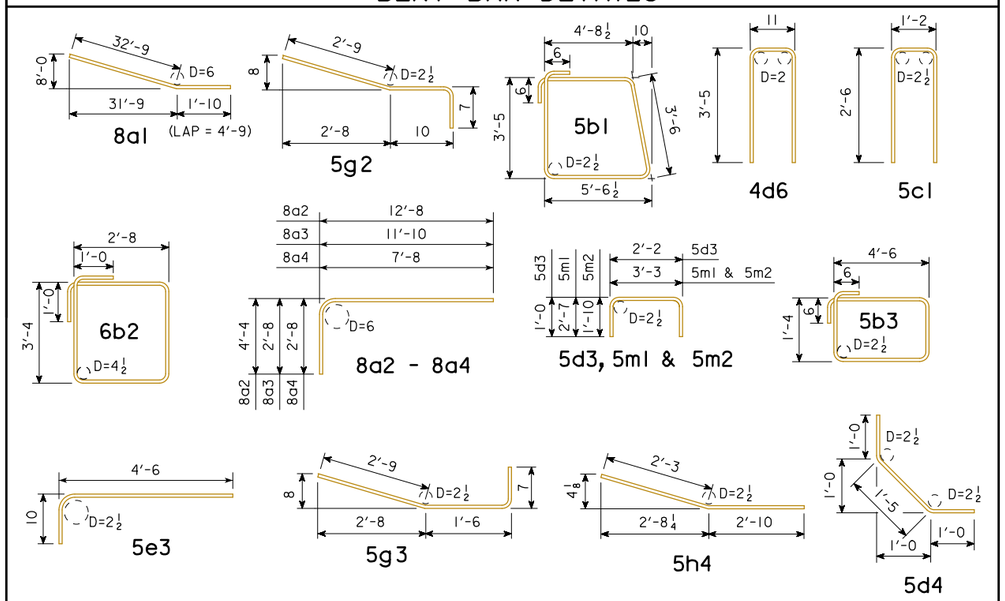

NOTE: ALL DIMENSIONS ARE OUT TO OUT. D = PIN DIAMETER

REINFORCING BAR LIST - ABUTMENT 23C

	BAR	LOCATION	SHAPE	NO.	LENGTH	WEIGHT
EPOXY COATED BARS	8a1-23C	FOOTING LONGIT.		30	34'-7	2770
	8a2-23C	WING FOOTING		6	17'-0	272
	8a3-23C	WING FOOTING		12	14'-6	465
	8a4-23C	WING FOOTING		8	10'-4	221
	6b2-23C	FOOTING HOOPS		21	14'-0	442
	5b1-23C	FOOTING HOOPS		50	18'-2	947
	5b3-23C	FOOTING HOOPS		18	12'-8	238
	5c1-23C	FOOTING HORIZ. TIES F.F.		6	6'-2	39
	6d1-23C	BACKWALL VERT. B.F.		115	10'-4	1785
	5d2-23C	BACKWALL VERT. F.F.		57	10'-0	595
	5d3-23C	PAVING NOTCH		57	4'-2	248
	5d4-23C	PAVING NOTCH		57	3'-5	203
	4d6-23C	BACKWALL VERT. HOOP		57	7'-9	295
	5e1-23C	WING EXT. VERT.		18	10'-3	192
	5e2-23C	WING EXT. VERT.		18	8'-5	158
	5e3-23C	MASKWALL EXT. VERT.		56	5'-4	312
	5g1-23C	BACKWALL LONGIT.		40	29'-9	1241
	5g2-23C	BACKWALL DOWELS		18	4'-2	78
	5g3-23C	BACKWALL DOWELS		18	4'-10	91
	5h2-23C	ABUT. WING HORIZ.		9	5'-0	47
	5h4-23C	ABUT. WING HORIZ.		3	5'-1	16
	5m1-23C	BEAM STEPS TRANSV.		16	8'-5	140
	5m2-23C	BEAM STEPS TRANSV.		12	6'-11	87
	5n1-23C	BEAM STEPS LONGIT.		28	3'-2	92
	MASKWALLS - SEE DESIGN SHEET 17					3122
	WINGWALLS - SEE DESIGN SHEETS 11 & 12					862
	REINFORCING STEEL, EPOXY COATED - TOTAL (LBS.)					14957
S.S. BARS	5d5-23C	PAVING NOTCH DOWELS		29	3'-6	106
	MASKWALLS - SEE DESIGN SHEET 17					43
	WINGWALLS - SEE DESIGN SHEETS 11 & 12					47
	REINFORCING STEEL, STAINLESS STEEL - TOTAL (LBS.)					196

HIGH PERFORMANCE STRUCTURAL CONCRETE PLACEMENT QUANTITIES

ABUTMENT 23C

LOCATION	QUANTITY
FOOTING AND STEPS	61.0
BACKWALL BELOW CONSTRUCTION JOINT	11.1
BACKWALL ABOVE CONSTRUCTION JOINT	14.6
NW MASKWALL	14.3
NE MASKWALL	15.4
TOTAL (CU. YDS.)	116.4

STRUCTURAL CONCRETE (BRIDGE) PLACEMENT QUANTITIES

ABUTMENT 23C

LOCATION	QUANTITY
NW WINGWALL	2.4
NW WINGWALL EXTENSION	2.0
NE WINGWALL	3.5
NE WINGWALL EXTENSION	4.2
TOTAL (CU. YDS.)	12.1

ESTIMATED QUANTITIES

ABUTMENT 23C

ITEM	UNIT	QUANTITY
EXCAVATION, CLASS 20	CY	126
STRUCTURAL CONCRETE (BRIDGE)	CY	12.1
HIGH PERFORMANCE STRUCTURAL CONCRETE	CY	116.4
REINFORCING STEEL, EPOXY COATED	LB	14957
REINFORCING STEEL, STAINLESS STEEL	LB	196
PILES, STEEL, HP 14 X 73	LF	380

NOTE:

DESIGNATION "-23C" SIGNIFIES BAR ASSOCIATED WITH ABUTMENT 23C OF THE RAMP C BRIDGE. "-23C" NOT SHOWN IN DETAILS FOR CLARITY.

DESIGN FOR VARIABLE SKEW (L.A.)

278'-8 x 40' CONTINUOUS WELDED GIRDER BRIDGE W/14' BIKE TRAIL

139'-4 END SPAN 139'-4 INTERIOR SPANS

ABUTMENT 23C BAR LIST

STA. 3589+46.06, BASELINE U.S. 67 RAMP C TBD

SCOTT COUNTY

IOWA DEPARTMENT OF TRANSPORTATION - HIGHWAY DIVISION

DESIGN SHEET NO. 18 OF 64 FILE NO. 30253 DESIGN NO. 3608

benesch engineers · scientists · planners
Alfred Benesch & Company
205 North Michigan Avenue, Suite 2400
Chicago, Illinois 60601
312-565-0450 Job No. 10061

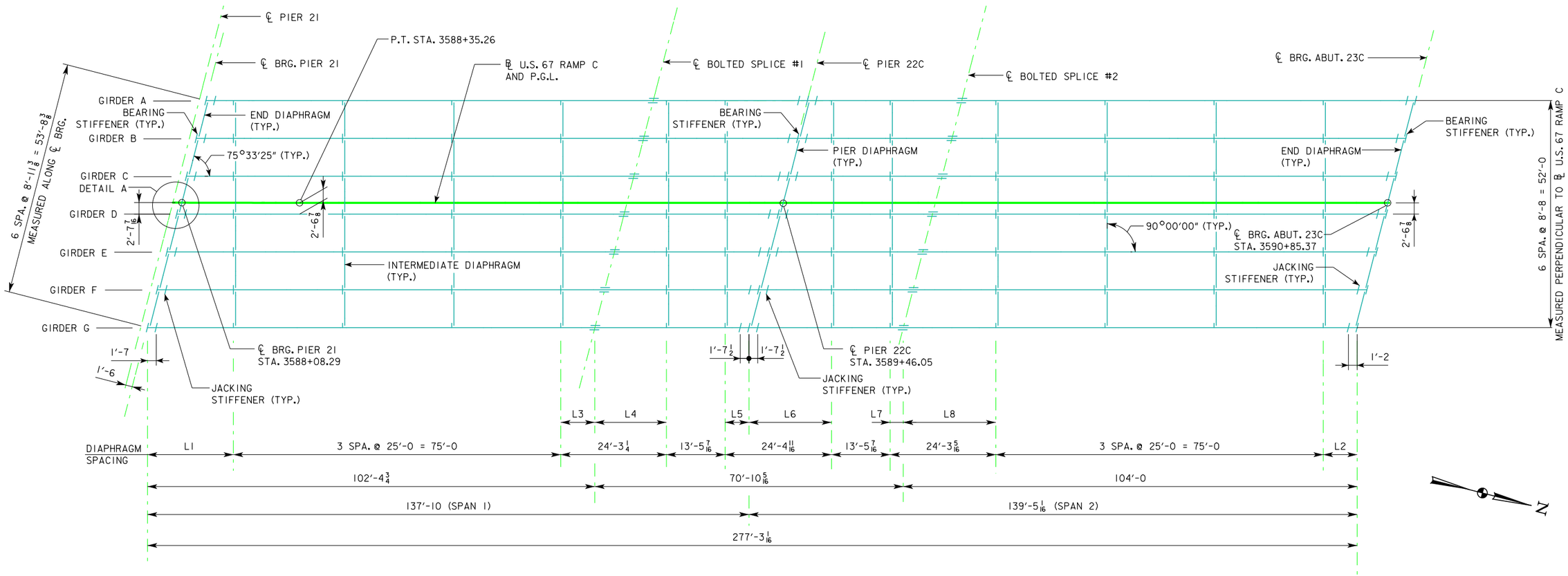

FRAMING PLAN

GIRDER DATA

	L1	L2	L3	L4	L5	L6	L7	L8
GIRDER A	6'-2 3/4	21'-2 3/16	21'-2	3'-1 1/4	18'-10 9/16	5'-6 1/8	16'-5 1/2	7'-9 13/16
GIRDER B	8'-5 1/2	18'-11 7/16	18'-11 1/4	5'-4	16'-7 13/16	7'-8 7/8	14'-2 3/4	10'-0 9/16
GIRDER C	10'-8 5/16	16'-8 5/8	16'-8 7/16	7'-6 13/16	14'-5	9'-11 11/16	11'-11 15/16	12'-3 3/8
GIRDER D	12'-11 1/16	14'-5 7/8	14'-5 11/16	9'-9 9/16	12'-2 1/4	12'-2 7/16	9'-9 3/16	14'-6 1/8
GIRDER E	15'-1 7/8	12'-3 1/16	12'-2 7/8	12'-0 3/8	9'-11 7/16	14'-5 1/4	7'-6 3/8	16'-8 15/16
GIRDER F	17'-4 5/8	10'-0 5/16	10'-0 1/8	14'-3 1/8	7'-8 11/16	16'-8	5'-3 5/8	18'-11 11/16
GIRDER G	19'-7 7/16	7'-9 1/2	7'-9 5/16	16'-5 15/16	5'-5 7/8	18'-10 13/16	3'-0 13/16	21'-2 1/2

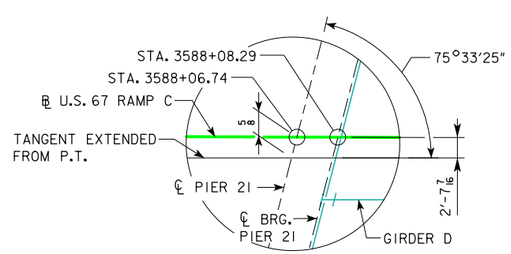

DETAIL A

U.S. 67 RAMP C CURVE DATA

P.I. STA. = 3586+05.19
Δ = 03°17'46.82" LT
D = 00°42'58.31"
T = 230.19'
L = 460.26'
E = 3.31
R = 8000.00'
e = N.C.
L = NA
x = NA
m = NA
P.C. STA. = 3583+75.00
P.T. STA. = 3588+35.26

NOTE:

ALL DIMENSIONS ARE MEASURED ALONG ℄ GIRDERS AND ACCOUNT FOR THE VERTICAL COMPONENT DUE TO CHANGE IN ELEVATION IN addition TO THE HORIZONTAL COMPONENT MEASURED IN PLAN.

SEE DESIGN SHEET 35 FOR JACKING NOTES.

DESIGN FOR VARIABLE SKEW (L.A.)

278'-8 x 40' CONTINUOUS WELDED GIRDER BRIDGE W/14' BIKE TRAIL

139'-4 END SPAN — 139'-4 INTERIOR SPANS

FRAMING PLAN

STA. 3589+46.06, BASELINE U.S. 67 RAMP C — TBD

SCOTT COUNTY

IOWA DEPARTMENT OF TRANSPORTATION - HIGHWAY DIVISION

DESIGN SHEET NO. 19 OF 64 FILE NO. 30253 DESIGN NO. 3608

benesch engineers · scientists · planners
Alfred Benesch & Company
205 North Michigan Avenue, Suite 2400
Chicago, Illinois 60601
312-565-0450 Job No. 10061

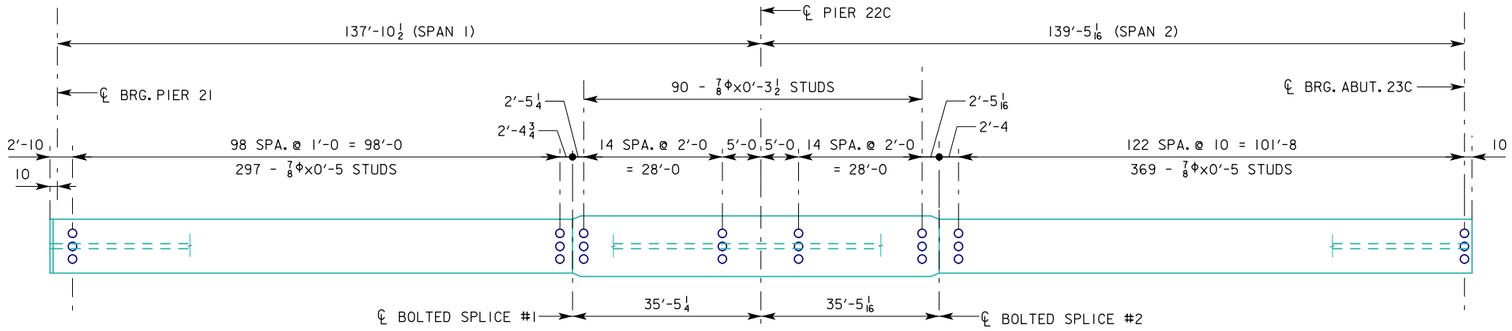

SHEAR STUD SPACING - GIRDERS B, C, D, E, AND F

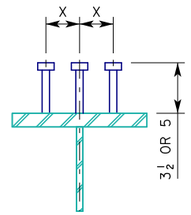

FLANGE WIDTH	X
16	6
18	7

SHEAR STUD DETAILS

NOTE: ALL STUDS TO BE 7/8" DIA.

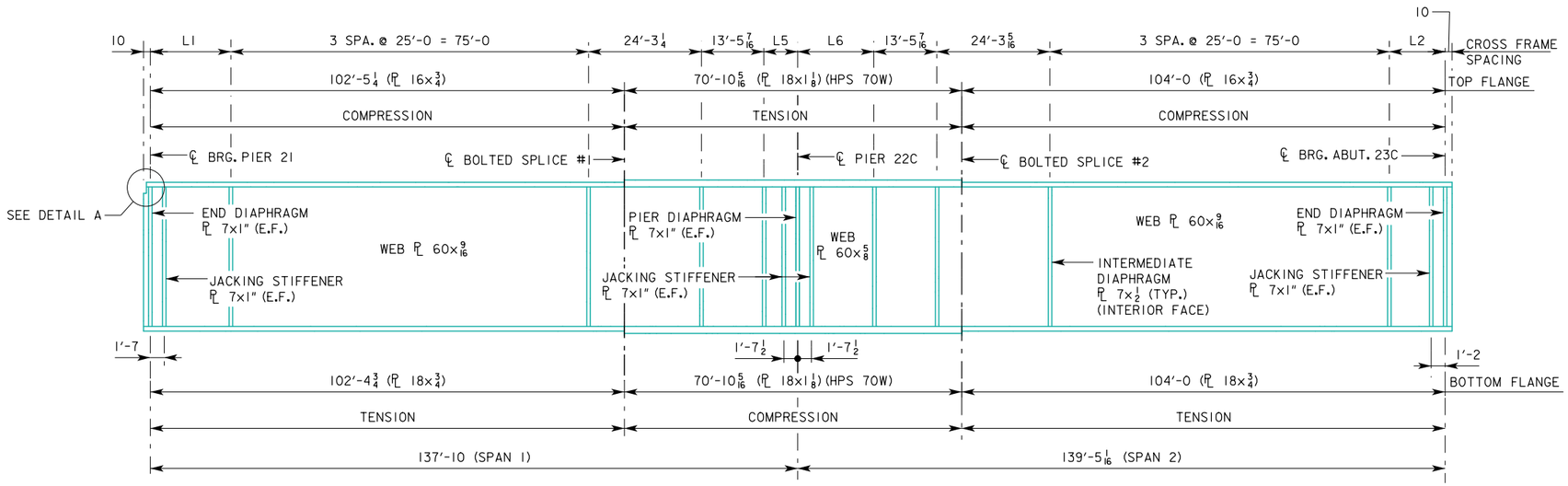

ELEVATION - GIRDERS B, C, D, E, AND F

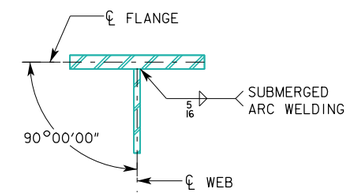

FLANGE TO WEB DETAIL

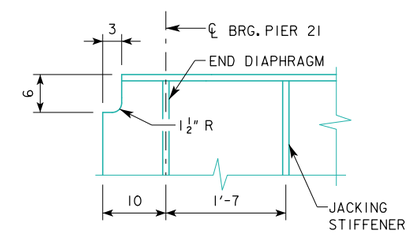

DETAIL A

NOTES:

SEE FRAMING PLAN ON DESIGN SHEET 19 FOR LOCATIONS OF DIAPHRAGMS AND CROSS FRAMES AND FOR DIMENSIONS L1, L2, L5, AND L6.

SEE DESIGN SHEET 21 FOR WEATHERING STEEL AND ADDITIONAL NOTES.

SEE DESIGN SHEET 22 FOR GIRDER SPLICE DETAILS.

SEE WELDING DETAILS ON DESIGN SHEET 30 FOR STIFFENER DETAILS.

WELDED SHOP WEB AND FLANGE SPLICES MAY BE PERMITTED WHEN DETAILED ON THE SHOP DRAWINGS AND APPROVED BY THE ENGINEER. NO ADDITIONAL PAYMENT WILL BE MADE FOR OPTIONAL WEB AND FLANGE SPLICES ADDED FOR THE CONTRACTOR'S CONVENIENCE.

CHARPY V-NOTCH TOUGHNESS REQUIREMENTS IN ACCORDANCE WITH ARTICLE 4152.02 OF THE STANDARD SPECIFICATIONS SHALL APPLY TO ALL CROSS FRAMES AND CONNECTION STIFFENERS AT CROSS FRAMES.

* 0.9 (TWO DESIGN TRUCKS + LANE)

MOMENT AND REACTION TABLE

LOAD NAME	LOAD (KIPS/FOOT)		MOMENT (FOOT-KIPS)			REACTION (KIPS)		
			SPAN 1	PIER 22C	SPAN 2	PIER 21	PIER 22C	PIER 23C
DC1	1.12-1.20		1370	-3014	1429	57	203	58
DC2	0.140		191	-320	199	7	24	7
DW	0.159		217	-363	226	8	27	8
	DISTRIBUTION FACTOR							
	MOMENT	REACTION						
LIVE LOAD + IMPACT HL-93 (TRUCK + LANE)	0.640-0.657	0.861	2345	-2048*	2375	110	217 *	115
LIVE LOAD + IMPACT HL-93 (TANDEM + LANE)			1978	-1368	2003	90	152	95
TOTAL			4123	-5745	4229	182	471	188

benesch engineers · scientists · planners
Alfred Benesch & Company
205 North Michigan Avenue, Suite 2400
Chicago, Illinois 60601
312-565-0450 Job No. 10061

DESIGN FOR VARIABLE SKEW (L.A.)

278'-8 x 40' CONTINUOUS WELDED GIRDER BRIDGE W/14' BIKE TRAIL

139'-4 END SPAN 139'-4 INTERIOR SPANS

GIRDERS B, C, D, E & F DETAILS

STA. 3589+46.06, BASELINE U.S. 67 RAMP C TBD

SCOTT COUNTY

IOWA DEPARTMENT OF TRANSPORTATION - HIGHWAY DIVISION

DESIGN SHEET NO. 20 OF 64 FILE NO. 30253 DESIGN NO. 3608

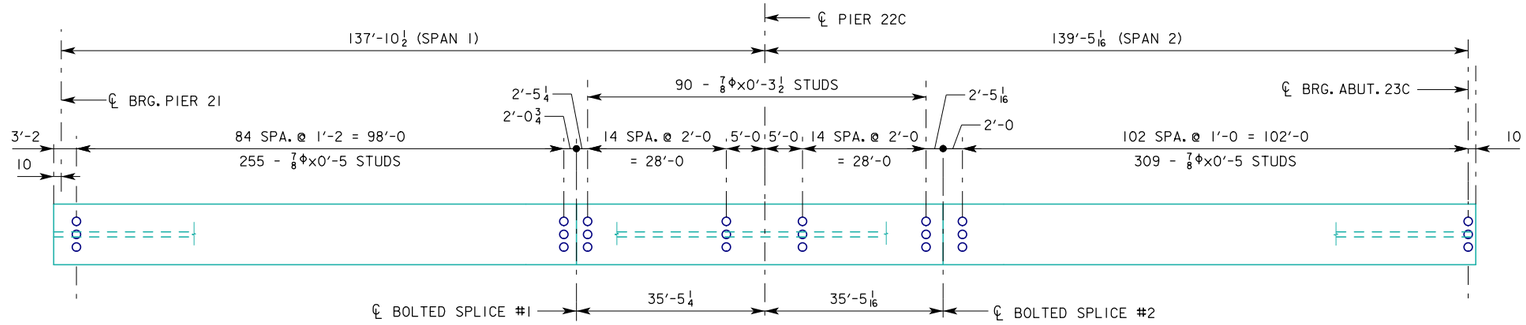

SHEAR STUD SPACING - GIRDERS A AND G

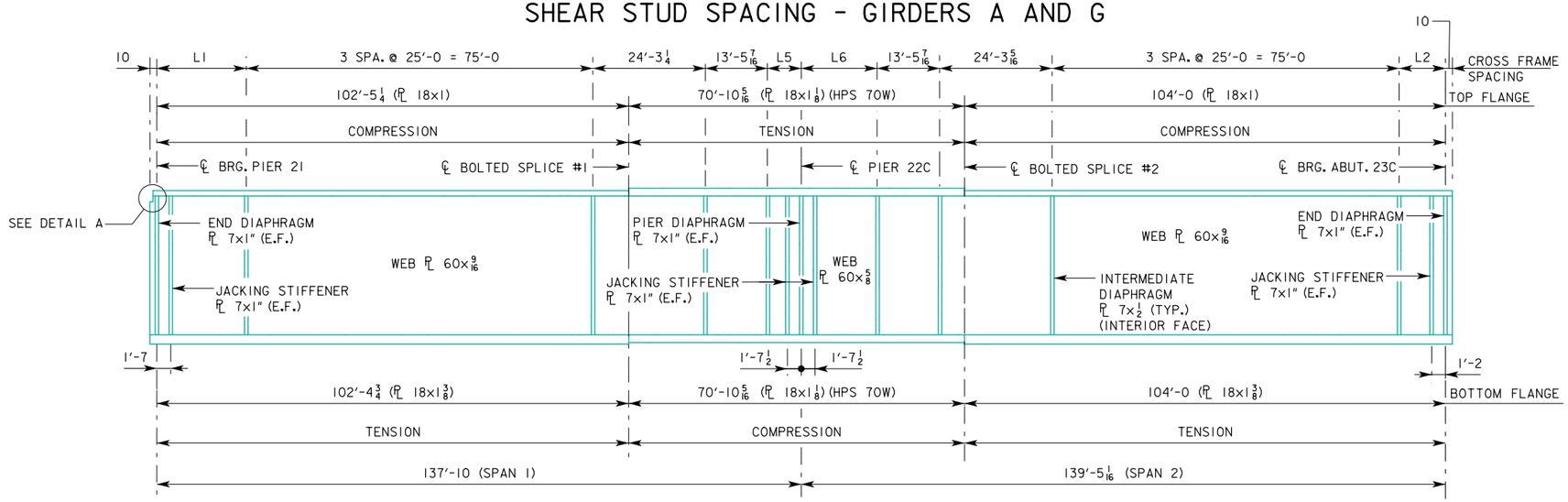

ELEVATION - GIRDERS A AND G

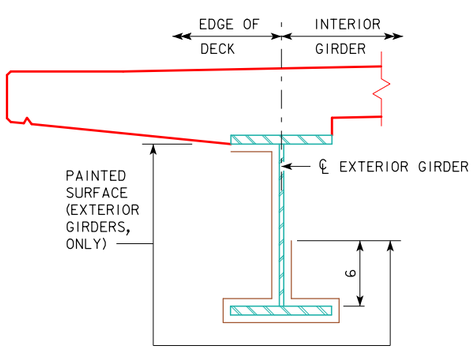

LIMITS OF PAINTING DETAIL

(BARRIER RAIL NOT SHOWN)

MOMENT AND REACTION TABLE

LOAD NAME	LOAD (KIPS/FOOT)		MOMENT (FOOT-KIPS)			REACTION (KIPS)		
			SPAN 1	PIER 22C	SPAN 2	PIER 21	PIER 22C	PIER 23C
DC1	1.19		1576	-2808	1637	62	205	63
DC2	0.280		404	-587	418	15	47	15
DW	0.159		229	-333	237	9	27	9
	DISTRIBUTION FACTOR							
	MOMENT	REACTION						
LIVE LOAD + IMPACT HL-93 (TRUCK + LANE)	.705	.705	2623	-2011*	2663	90	178 *	94
LIVE LOAD + IMPACT HL-93 (TANDEM + LANE)			2211	-1344	2245	74	125	78
TOTAL			4832	-5739	4955	176	457	181

MOMENTS AND REACTIONS ARE UNFACTORED.

DC1 INCLUDES ALL NON-COMPOSITE DEAD LOADS, SUCH AS STEEL GIRDER WEIGHT, AND CONC. SLAB WEIGHT.

DC2 INCLUDES COMPOSITE DEAD LOADS SUCH AS BARRIER RAILINGS.

DW INCLUDES A FUTURE WEARING SURFACE OF 20 PSF.

* 0.9 (TWO DESIGN TRUCKS + LANE)

WEATHERING STEEL NOTES:

ALL STRUCTURAL STEEL, EXCEPT AS NOTED, SHALL CONFORM TO ASTM A709 GRADE 50W. THE MINIMUM YIELD POINT FOR GRADE 50W STRUCTURAL STEEL IS 50,000 PSI FOR PLATES 4 INCHES AND UNDER IN THICKNESS, AND ALL STRUCTURAL SHAPES. THE GRADE 50W STEEL IS A WEATHERING STEEL AND IS TO REMAIN UNPAINTED, EXCEPT AS NOTED.

FLOOR DRAINS INCLUDING PLATES WELDED TO THE DRAIN FOR DRAIN SUPPORT ARE TO BE GRADE 36 STEEL.

ALL PIECES COMPRISING THE PIER BEARINGS SHALL COMPLY WITH THE REQUIREMENTS AS STATED IN THE NOTES ON THE DISC BEARING DETAILS SHEETS.

SHEAR STUDS ARE TO BE OF AN APPROVED TYPE LISTED IN MATERIALS I.M. 453.10, APPENDIX A.

THE FINISH ON FLOOR DRAINS, BEARINGS AND WEATHERING STEEL SHALL BE IN ACCORDANCE WITH THE PLAN NOTES AND SECTION 2408, OF THE STANDARD SPECIFICATIONS. EXTERIOR SURFACES OF ALL GALVANIZED COMPONENTS WHICH ARE DESIGNATED IN THE CONTRACT DOCUMENTS TO BE PAINTED SHALL BE PREPARED IN ACCORDANCE WITH ARTICLE 2509.03, OF THE STANDARD SPECIFICATIONS.

THE GRADE 50W STEEL FOR THE WEBS OF THE EXTERIOR GIRDERS OF THE BRIDGE SHALL BE OF THE SAME TYPE AND FROM THE SAME STEEL MILL.

BOLTS FOR USE WITH WEATHERING STEEL SHALL BE A325 TYPE III WITH A563 GRADE DH3 NUTS AND F436 TYPE III WASHERS.

BOLTS USED TO SPLICE GIRDER SECTIONS ARE TO BE INSTALLED SUCH THAT NUTS ARE ON THE INSIDE FACE OF THE GIRDER WEBS FOR THE EXTERIOR GIRDERS, AND ON THE TOP OF BOTH TOP AND BOTTOM FLANGES OF ALL THE GIRDERS.

THE STEEL SHALL BE KEPT FREE OF OIL, GREASE, DIRT, CRAYON OR CHALK MARKS, CONCRETE SPATTER AND ANY OTHER FOREIGN MATTER THAT MAY AFFECT THE NATURAL OXIDATION OF THE STEEL. ANY FOREIGN MATTER REMAINING ON THE STEEL AFTER COMPLETION OF BRIDGE CONSTRUCTION SHALL BE REMOVED BY THE BRIDGE CONTRACTOR AS DIRECTED BY THE ENGINEER. THE RESULTANT SURFACE SHALL BE FREE OF ALL VISIBLE RESIDUES. ALL COSTS ASSOCIATED WITH CLEANING STEEL SURFACES SHALL BE BORNE BY THE BRIDGE CONTRACTOR.

SEAL MATERIAL FOR CAULKING SHALL BE NEUTRAL CURE AND NON SAG SILICONE. THREE PRODUCTS MEETING THESE CRITERIA ARE DOW 888, CSL 342 AND CRAFCO ROADSAVER SILICONE JOINT SEALANT.

STEEL PAINTING NOTES:

EXTERIOR SURFACES: ALL EXTERIOR FACES OF THE FASCIA GIRDERS WITHIN THE LIMITS SHOWN IN THESE PLANS SHALL BE PAINTED IN ACCORDANCE WITH THE "SPECIAL PROVISIONS FOR FLUOROPOLYMER PAINT FOR STRUCTURAL STEEL". THE FINISH COAT PAINT COLOR SHALL MATCH FEDERAL STANDARD NO. 595C COLOR NUMBER 26099 SATIN GRAY-BLUE. ZONE PAINTING OF SUPERSTRUCTURE STEEL NEAR THE EXPANSION JOINTS IN ACCORDANCE WITH THE STANDARD SPECIFICATIONS SHALL APPLY TO INTERIOR GIRDER SURFACES BUT NOT THE FASCIA SURFACES LISTED ABOVE.

PROTECTION OF PAINTED SURFACES: PAINTED SURFACES SHALL BE PROTECTED FROM DAMAGE DURING SHIPMENT AND DURING ERECTION. PADDING OR OTHER MATERIAL APPROPRIATE FOR PROTECTING PAINTED SURFACES SHALL BE PLACED BETWEEN THE DECK FORMWORK BRACING AND THE EXTERIOR GIRDER FACE DURING CONSTRUCTION OF THE DECK. AFTER ERECTION OF THE BRIDGE, PAINTING OF EXTERIOR FASTENERS AND TOUCHUP OF PAINTED SURFACES SHALL BE IN ACCORDANCE WITH THE "SPECIAL PROVISIONS FOR FLUOROPOLYMER PAINTS FOR STRUCTURAL STEEL".

NOTES:

SEE FRAMING PLAN ON DESIGN SHEET 19 FOR LOCATIONS OF DIAPHRAGMS AND CROSS FRAMES AND FOR DIMENSIONS L1, L2, L5, AND L6.

SEE DESIGN SHEET 20 FOR ADDITIONAL NOTES AND DETAILS.

SEE DESIGN SHEET 26 FOR SUPERSTRUCTURE NOTES.

DESIGN FOR VARIABLE SKEW (L.A.)

278'-8 x 40' CONTINUOUS WELDED GIRDER BRIDGE W/14' BIKE TRAIL

139'-4 END SPAN 139'-4 INTERIOR SPANS

GIRDERS A AND G DETAILS

STA. 3589+46.06, BASELINE U.S. 67 RAMP C TBD

SCOTT COUNTY

IOWA DEPARTMENT OF TRANSPORTATION - HIGHWAY DIVISION

DESIGN SHEET NO. 21 OF 64 FILE NO. 30253 DESIGN NO. 3608

benesch engineers · scientists · planners
Alfred Benesch & Company
205 North Michigan Avenue, Suite 2400
Chicago, Illinois 60601
312-565-0450 Job No. 10061

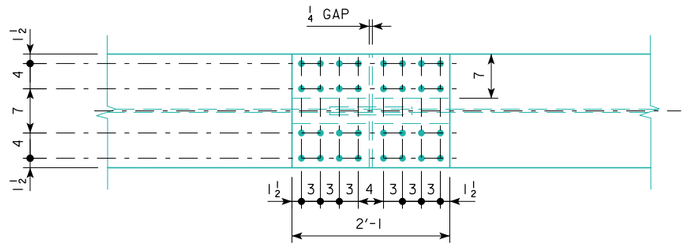

TOP PLAN

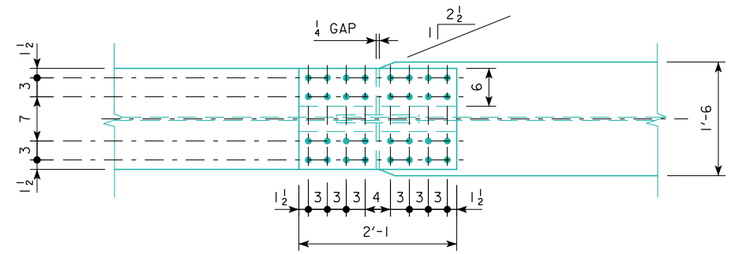

TOP PLAN

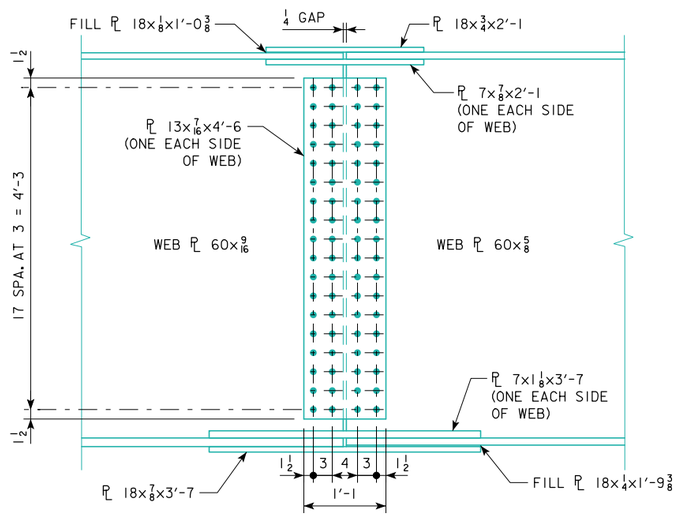

ELEVATION

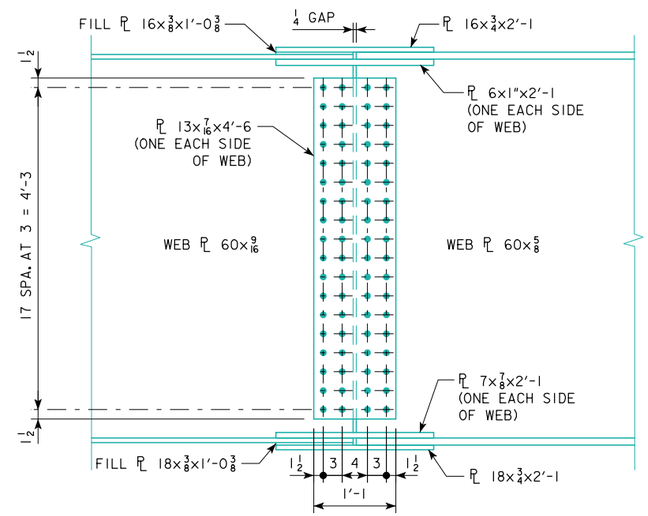

ELEVATION

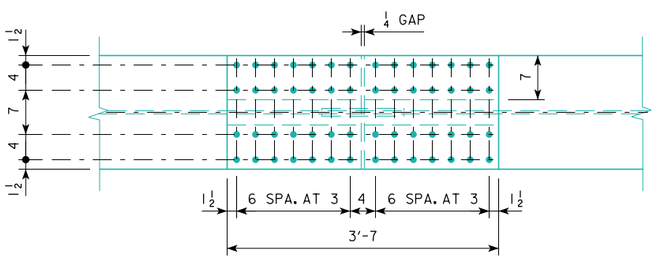

BOTTOM PLAN

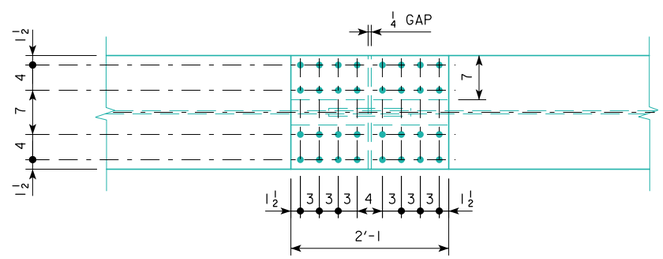

BOTTOM PLAN

BOLTED SPLICE - EXTERIOR GIRDERS

(#1 SHOWN, #2 OPPOSITE HAND)

BOLTED SPLICE - INTERIOR GIRDERS

(#1 SHOWN, #2 OPPOSITE HAND)

NOTE:

SEE DESIGN SHEET 21 FOR WEATHERING STEEL NOTES.

SEE DESIGN SHEET 26 FOR SUPERSTRUCTURE NOTES.

SEE DESIGN SHEET 19 FOR FRAMING PLAN.

SEE DESIGN SHEETS 20 AND 21 FOR GIRDER DETAILS.

DESIGN FOR VARIABLE SKEW (L.A.)

278'-8 x 40' CONTINUOUS WELDED GIRDER BRIDGE W/14' BIKE TRAIL

139'-4 END SPAN 139'-4 INTERIOR SPANS

SPLICE DETAILS

STA. 3589+46.06, BASELINE U.S. 67 RAMP C TBD

SCOTT COUNTY

IOWA DEPARTMENT OF TRANSPORTATION - HIGHWAY DIVISION

DESIGN SHEET NO. 22 OF 64 FILE NO. 30253 DESIGN NO. 3608

benesch engineers · scientists · planners
Alfred Benesch & Company
205 North Michigan Avenue, Suite 2400
Chicago, Illinois 60601
312-565-0450 Job No. 10061

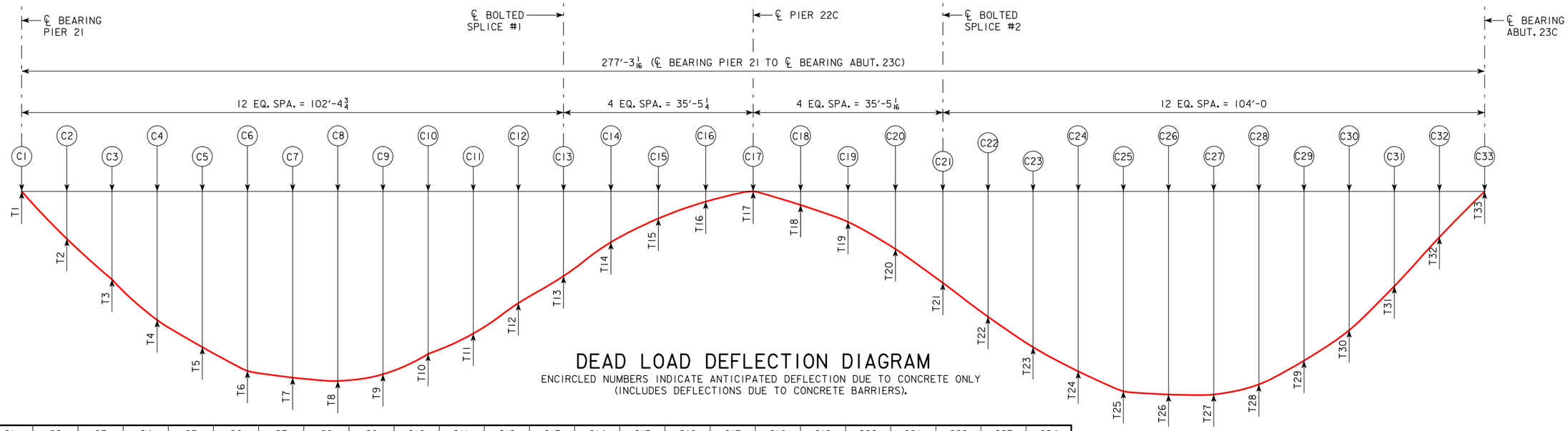

DEAD LOAD DEFLECTION DIAGRAM

ENCIRCLED NUMBERS INDICATE ANTICIPATED DEFLECTION DUE TO CONCRETE ONLY
(INCLUDES DEFLECTIONS DUE TO CONCRETE BARRIERS).

GIRDER	C1	C2	C3	C4	C5	C6	C7	C8	C9	C10	C11	C12	C13	C14	C15	C16	C17	C18	C19	C20	C21	C22	C23	C24
A	0	9/16	1 1/16	1 1/2	1 13/16	2 1/8	2 1/4	2 5/16	2 1/4	2 1/16	1 3/4	1 7/16	1 1/16	11/16	3/8	1/8	0	3/16	7/16	3/4	1 3/16	1 9/16	1 15/16	2 3/16
B	0	3/4	1 7/16	2 1/16	2 1/2	2 7/8	3 1/16	3 1/16	2 15/16	2 11/16	2 5/16	1 13/16	1 3/8	7/8	7/16	3/16	0	3/16	1/2	15/16	1 1/2	2	2 1/2	2 7/8
C	0	3/4	1 7/16	2 1/16	2 1/2	2 7/8	3 1/16	3 1/16	2 15/16	2 11/16	2 5/16	1 13/16	1 3/8	7/8	7/16	3/16	0	3/16	1/2	15/16	1 1/2	2	2 1/2	2 7/8
D	0	11/16	1 5/16	1 7/8	2 5/16	2 11/16	2 13/16	2 13/16	2 3/4	2 7/16	2 1/8	1 11/16	1 1/4	3/4	3/8	1/8	0	3/16	7/16	7/8	1 3/8	1 7/8	2 5/16	2 11/16
E	0	11/16	1 3/8	1 15/16	2 3/8	2 3/4	2 15/16	2 15/16	2 13/16	2 9/16	2 3/16	1 3/4	1 5/16	13/16	7/16	1/8	0	3/16	1/2	15/16	1 7/16	1 15/16	2 3/8	2 3/4
F	0	11/16	1 3/8	1 15/16	2 3/8	2 3/4	2 15/16	2 15/16	2 13/16	2 9/16	2 3/16	1 3/4	1 5/16	13/16	7/16	1/8	0	3/16	1/2	15/16	1 7/16	1 15/16	2 3/8	2 3/4
G	0	9/16	1 1/8	1 5/8	2	2 5/16	2 1/2	2 1/2	2 1/2	2 1/4	2	1 5/8	1 3/16	3/4	3/8	1/8	0	3/16	7/16	7/8	1 5/16	1 3/4	2 1/8	2 7/16

GIRDER	C25	C26	C27	C28	C29	C30	C31	C32	C33
A	2 7/16	2 7/16	2 7/16	2 5/16	2	1 5/8	1 1/8	9/16	0
B	3 1/4	3 5/16	3 5/16	3 1/8	2 11/16	2 3/16	1 9/16	13/16	0
C	3 1/4	3 5/16	3 5/16	3 1/8	2 11/16	2 3/16	1 9/16	13/16	0
D	3	3 1/16	3 1/16	2 7/8	2 1/2	2 1/16	1 7/16	3/4	0
E	3 1/16	3 3/16	3 1/8	3	2 5/8	2 1/8	1 1/2	3/4	0
F	3 1/16	3 3/16	3 1/8	3	2 5/8	2 1/8	1 1/2	3/4	0
G	2 11/16	2 3/4	2 11/16	2 1/2	2 3/16	1 3/4	1 1/4	5/8	0

GIRDER	T1	T2	T3	T4	T5	T6	T7	T8	T9	T10	T11	T12	T13	T14	T15	T16	T17	C18	T19	T20	T21	T22	T23	T24
A	0	11/16	1 5/16	1 7/8	2 5/16	2 5/8	2 13/16	2 7/8	2 13/16	2 9/16	2 1/4	1 13/16	1 3/8	7/8	7/16	3/16	0	3/16	1/2	15/16	1 1/2	1 15/16	2 7/16	2 3/4
B	0	7/8	1 11/16	2 7/16	3	3 7/16	3 5/8	3 5/8	3 1/2	3 1/8	2 11/16	2 3/16	1 5/8	1	1/2	3/16	0	1/4	5/8	1 1/8	1 3/4	2 3/8	2 15/16	3 7/16
C	0	7/8	1 11/16	2 7/16	3	3 7/16	3 5/8	3 5/8	3 1/2	3 1/8	2 11/16	2 3/16	1 5/8	1	1/2	3/16	0	1/4	5/8	1 1/8	1 3/4	2 3/8	2 15/16	3 7/16
D	0	13/16	1 5/8	2 5/16	2 13/16	3 3/16	3 3/8	3 3/8	3 5/16	2 15/16	2 9/16	2	1 1/2	15/16	1/2	3/16	0	1/4	9/16	1 1/16	1 5/8	2 1/4	2 3/4	3 3/16
E	0	7/8	1 5/8	2 5/16	2 7/8	3 5/16	3 7/16	3 1/2	3 3/8	3	2 5/8	2 1/16	1 9/16	15/16	1/2	3/16	0	1/4	9/16	1 1/16	1 11/16	2 5/16	2 7/8	3 5/16
F	0	7/8	1 5/8	2 5/16	2 7/8	3 5/16	3 7/16	3 1/2	3 3/8	3	2 5/8	2 1/16	1 9/16	15/16	1/2	3/16	0	1/4	9/16	1 1/16	1 11/16	2 5/16	2 7/8	3 5/16
G	0	3/4	1 7/16	2	2 1/2	2 7/8	3 1/16	3 1/8	3 1/16	2 3/4	2 7/16	2	1 1/2	15/16	1/2	3/16	0	1/4	9/16	1 1/16	1 5/8	2 1/8	2 5/8	3

GIRDER	T25	T26	T27	T28	T29	T30	T31	T32	T33
A	3	3 1/16	3 1/16	2 7/8	2 1/2	2	1 3/8	3/4	0
B	3 13/16	3 15/16	3 7/8	3 11/16	3 3/16	2 5/8	1 13/16	15/16	0
C	3 13/16	3 15/16	3 7/8	3 11/16	3 3/16	2 5/8	1 13/16	15/16	0
D	3 9/16	3 11/16	3 11/16	3 7/16	3	2 7/16	1 3/4	7/8	0
E	3 11/16	3 3/4	3 3/4	3 9/16	3 1/8	2 9/16	1 3/4	15/16	0
F	3 11/16	3 3/4	3 3/4	3 9/16	3 1/8	2 9/16	1 3/4	15/16	0
G	3 1/4	3 5/16	3 5/16	3 1/16	2 11/16	2 3/16	1 1/2	13/16	0

NOTES:

NEGATIVE VALUES INDICATE AN UPWARD DEFLECTION.
(NEGATIVE VALUES DO NOT INDICATE THAT THE DEFLECTION IS OPPOSITE OF THE SHAPE DEFINED BY THE ILLUSTRATION.)

DESIGN FOR VARIABLE SKEW (L.A.)

278'-8 x 40' CONTINUOUS WELDED GIRDER BRIDGE W/14' BIKE TRAIL

139'-4 END SPAN — 139'-4 INTERIOR SPANS

GIRDER DEFLECTION DETAILS

STA. 3589+46.06, BASELINE U.S. 67 RAMP C — TBD

SCOTT COUNTY

IOWA DEPARTMENT OF TRANSPORTATION - HIGHWAY DIVISION

DESIGN SHEET NO. 23 OF 64 FILE NO. 30253 DESIGN NO. 3608

benesch engineers · scientists · planners
Alfred Benesch & Company
205 North Michigan Avenue, Suite 2400
Chicago, Illinois 60601
312-565-0450 Job No. 10061

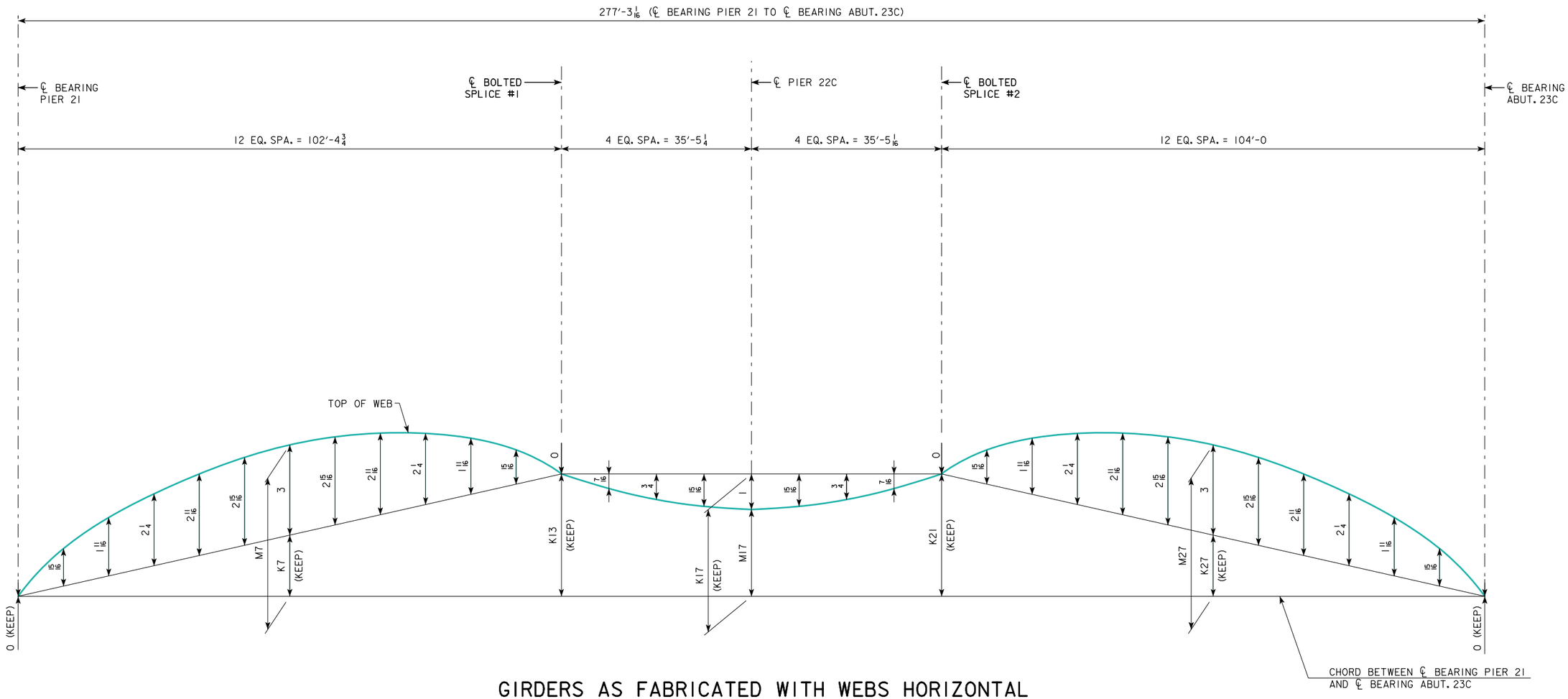

GIRDERS AS FABRICATED WITH WEBS HORIZONTAL

NOTE: DOES NOT INCLUDE THE DEFLECTION DUE TO STEEL OR CONCRETE

	KEEP						
	℄ BRG. PIER 21		℄ BOLT. SPL. #1	℄ PIER 22C	℄ BOLT. SPL. #2		℄ ABUT. PIER 23C BRG.
GIRDER	K1	K7	K13	K17	K21	K27	K33
A	0	3 5/8	7 1/4	7 1/4	7 3/8	3 11/16	0
B	0	3 5/8	7 1/4	7 1/4	7 3/8	3 11/16	0
C	0	3 5/8	7 1/4	7 1/4	7 3/8	3 11/16	0
D	0	3 9/16	7 1/8	7 1/8	7 1/4	3 5/8	0
E	0	3 9/16	7 1/8	7 1/4	7 3/8	3 11/16	0
F	0	3 9/16	7 1/8	7 1/4	7 3/8	3 11/16	0
G	0	3 11/16	7 3/8	7 3/8	7 1/2	3 3/4	0

	TOTAL		
GIRDER	M7	M17	M27
A	6 5/8	6 1/4	6 11/16
B	6 5/8	6 1/4	6 11/16
C	6 5/8	6 1/4	6 11/16
D	6 9/16	6 1/8	6 5/8
E	6 9/16	6 1/4	6 11/16
F	6 9/16	6 1/4	6 11/16
G	6 11/16	6 3/8	6 3/4

DESIGN FOR VARIABLE SKEW (L.A.)

278'-8 x 40' CONTINUOUS WELDED GIRDER BRIDGE W/14' BIKE TRAIL

139'-4 END SPAN 139'-4 INTERIOR SPANS

WEB FABRICATION DETAILS

STA. 3589+46.06, BASELINE U.S. 67 RAMP C TBD

SCOTT COUNTY

IOWA DEPARTMENT OF TRANSPORTATION - HIGHWAY DIVISION

DESIGN SHEET NO. 24 OF 64 FILE NO. 30253 DESIGN NO. 3608

benesch engineers · scientists · planners
Alfred Benesch & Company
205 North Michigan Avenue, Suite 2400
Chicago, Illinois 60601
312-565-0450 Job No. 10061

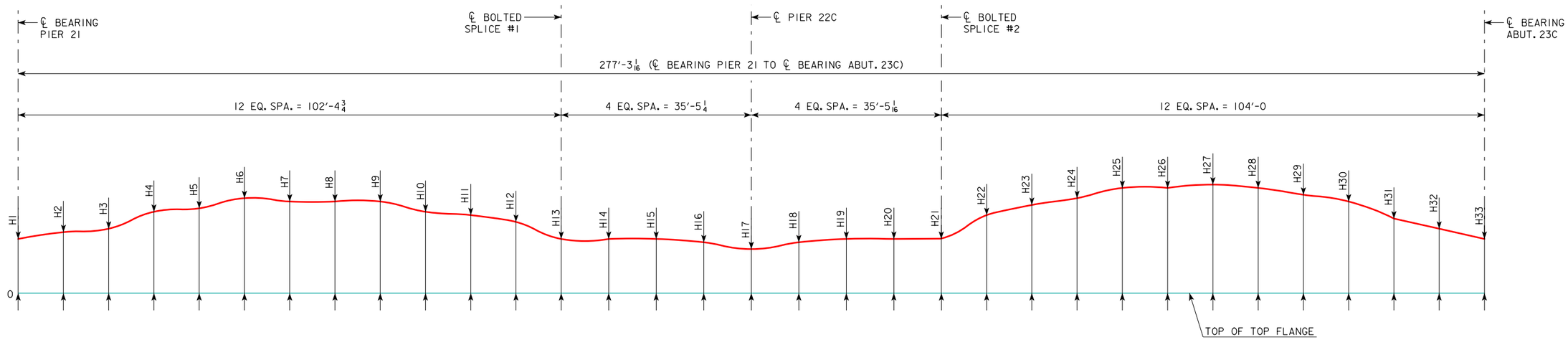

THEORETICAL CONCRETE HAUNCH DIAGRAM

FOR ESTIMATING PURPOSES ONLY.

GIRDER	H1	H2	H3	H4	H5	H6	H7	H8	H9	H10	H11	H12	H13	H14	H15	H16	H17	H18	H19	H20	H21	H22	H23	H24
A	1	15/16	7/8	15/16	1	1	1 1/16	1 1/16	1 1/16	1	1	1	1	1 1/8	1 1/8	1 1/8	1	1 1/16	1 1/8	1 1/16	1	1	1 1/8	1 1/8
B	1	1 1/8	1 1/4	1 1/2	1 11/16	1 13/16	1 7/8	1 13/16	1 3/4	1 9/16	1 7/16	1 3/8	1	1	15/16	7/8	3/4	7/8	1	1	1	1 7/16	1 5/8	1 13/16
C	1	1 1/8	1 1/4	1 1/2	1 11/16	1 13/16	1 7/8	1 13/16	1 3/4	1 9/16	1 7/16	1 3/8	1	1	15/16	7/8	3/4	7/8	1	1	1	1 7/16	1 5/8	1 13/16
D	1	1 1/16	1 1/4	1 7/16	1 1/2	1 5/8	1 11/16	1 5/8	1 5/8	1 1/2	1 7/16	1 5/16	1	1 1/16	1 1/16	1	7/8	1	1 1/16	1 1/16	1	1 7/16	1 1/2	1 11/16
E	1	1 1/8	1 3/16	1 7/16	1 9/16	1 3/4	1 11/16	1 11/16	1 11/16	1 1/2	1 7/16	1 5/16	1	1	1	15/16	13/16	15/16	1	1	1	1 7/16	1 5/8	1 3/4
F	1	1 1/8	1 3/16	1 7/16	1 9/16	1 3/4	1 11/16	1 11/16	1 11/16	1 1/2	1 7/16	1 5/16	1	1	1	15/16	13/16	15/16	1	1	1	1 7/16	1 5/8	1 3/4
G	1	15/16	1	1 1/16	1 1/8	1 3/16	1 1/4	1 1/4	1 1/4	1 1/8	1 1/16	1 1/16	1	1 1/16	1 1/16	1	7/8	1	1 1/16	1 1/16	1	1 1/16	1 3/16	1 5/16

GIRDER	H25	H26	H27	H28	H29	H30	H31	H32	H33
A	1 3/16	1 3/16	1 1/4	1 1/4	1 3/16	1 1/16	15/16	1	1
B	2	2 1/16	2 1/16	2 1/16	1 7/8	1 11/16	1 3/8	1 3/16	1
C	2	2 1/16	2 1/16	2 1/16	1 7/8	1 11/16	1 3/8	1 3/16	1
D	1 7/8	1 7/8	1 15/16	1 7/8	1 11/16	1 9/16	1 3/8	1 1/8	1
E	1 15/16	1 15/16	2	1 15/16	1 13/16	1 11/16	1 3/8	1 3/16	1
F	1 15/16	1 15/16	2	1 15/16	1 13/16	1 11/16	1 3/8	1 3/16	1
G	1 3/8	1 3/8	1 7/16	1 3/8	1 5/16	1 1/4	1 1/16	1	1

DESIGN FOR VARIABLE SKEW (L.A.)

278'-8 x 40' CONTINUOUS WELDED GIRDER BRIDGE W/14' BIKE TRAIL

139'-4 END SPAN 139'-4 INTERIOR SPANS

HAUNCH DETAILS

STA. 3589+46.06, BASELINE U.S. 67 RAMP C TBD

SCOTT COUNTY

IOWA DEPARTMENT OF TRANSPORTATION - HIGHWAY DIVISION

DESIGN SHEET NO. 25 OF 64 FILE NO. 30253 DESIGN NO. 3608

benesch engineers · scientists · planners
Alfred Benesch & Company
205 North Michigan Avenue, Suite 2400
Chicago, Illinois 60601
312-565-0450 Job No. 10061

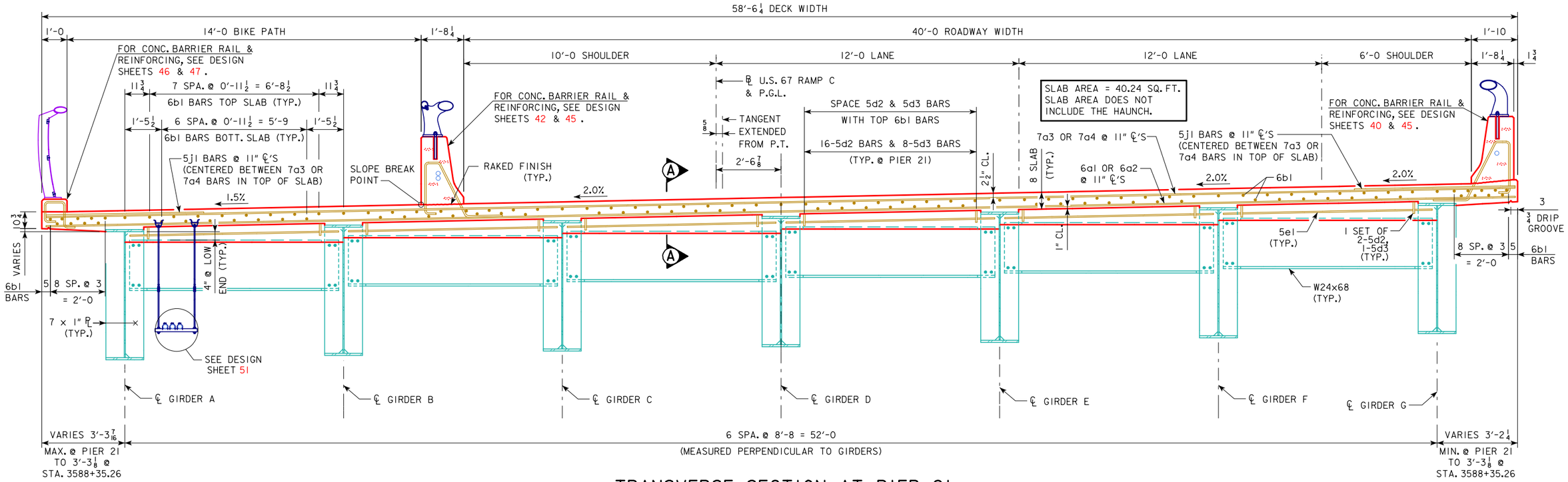

TRANSVERSE SECTION AT PIER 21

(LOOKING NORTH)

SUPERSTRUCTURE NOTES:

1. THE FLOOR SLAB AS SHOWN INCLUDES 1/2" INTEGRAL WEARING SURFACE.
2. FORMS FOR THE SLAB AND BARRIER RAIL ARE TO BE SUPPORTED BY THE GIRDERS.
3. CLEAR DISTANCE FROM FACE OF CONCRETE TO NEAR REINFORCING BAR SHALL BE 2 INCHES UNLESS OTHERWISE NOTED OR SHOWN.
4. TOP TRANSVERSE REINFORCING STEEL IS TO BE PARALLEL TO AND 2 1/2" CLEAR BELOW TOP OF SLAB. BOTTOM TRANSVERSE REINFORCING STEEL IS TO BE PARALLEL TO AND 1 INCH CLEAR ABOVE BOTTOM OF SLAB. TOP AND BOTTOM REINFORCING STEEL IS TO BE SUPPORTED BY INDIVIDUAL EPOXY COATED METAL BAR CHAIRS SPACED AT NOT MORE THAN 3'-0 CENTERS LONGITUDINALLY AND TRANSVERSELY, OR BY CONTINUOUS ROWS OF EPOXY COATED METAL BAR HIGH CHAIRS OR SLAB BOLSTERS SPACED 4'-0 APART.
5. TRANSVERSE SLAB REINFORCING MAY BE SPLICED WITH ONE LAP LOCATED AS FOLLOWS:
   TOP BAR - LAP MIDWAY BETWEEN GIRDERS (MIN. LAP = 4'-2).
   BOTTOM BARS - LAP OVER GIRDERS (MIN. LAP = 3'-1).
   PAYMENT FOR REINFORCING BARS SHALL BE BASED ON NO SPLICES, AND NO ALLOWANCE SHALL BE MADE FOR THE ADDITIONAL LENGTH OF BAR REQUIRED FOR THE USE OF SPLICES.
6. ALL FIELD CONNECTIONS ARE TO BE BOLTED USING "HIGH STRENGTH BOLTS". UNLESS OTHERWISE NOTED, ALL OPEN HOLES ARE TO BE 15/16" Φ AND ALL BOLTS ARE TO BE 7/8" Φ.
7. BOTTOM FLANGES ARE TO BE PERPENDICULAR TO WEBS AT THE REACTION POINTS.
8. FILL PL THICKNESSES SHOWN ON PLANS ARE BASED ON NOMINAL GIRDER DIMENSIONS. THESE THICKNESSES ARE TO BE VERIFIED OR ADJUSTED DURING FABRICATION TO SECURE A CLOSE FIT. EACH FILL PLATE SHALL FIT TO THE NEAREST 1/16" IN THICKNESS AND SINGLE PLATES ARE REQUIRED AT EACH FILL LOCATION. GIRDERS ARE TO BE TRULY SQUARE AT SPLICE POINTS WITH FLANGES PERPENDICULAR TO WEBS.
9. THE DESIGN DRAWINGS INDICATE AWS PREQUALIFIED WELDED JOINTS. ALTERNATE JOINT DETAILS MAY BE SUBMITTED FOR APPROVAL.
10. MAGNETIC PARTICLE INSPECTION OF WELDS, IN ACCORDANCE WITH THE STANDARD SPECIFICATIONS, WILL BE REQUIRED.
11. SHOP WELDED FLANGE SPLICES SHALL BE A MINIMUM OF 6 INCHES FROM A STIFFENER, 6 INCHES FROM A WEB SPLICE, AND 4 INCHES FROM A SHEAR CONNECTOR. WEB SPLICES SHALL BE A MINIMUM OF 6 INCHES FROM A STIFFENER. SPLICES SHALL NOT INTERFERE WITH ANY OTHER BRIDGE COMPONENTS. ALL SHOP WELDED BUTT SPLICES SHALL BE SHOWN ON THE SHOP DRAWINGS AND SUBJECT TO APPROVAL BY THE ENGINEER.

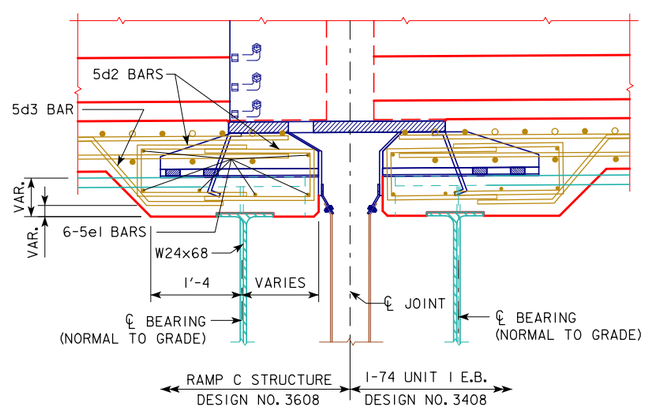

NOTES:
PLACE 5d HOOPS PARALLEL TO LONGIT. 6b1 BARS.
FOR FINGER JOINT DETAILS, SEE DESIGN NO. 3408.

SECTION A-A

(NORMAL TO PIER)

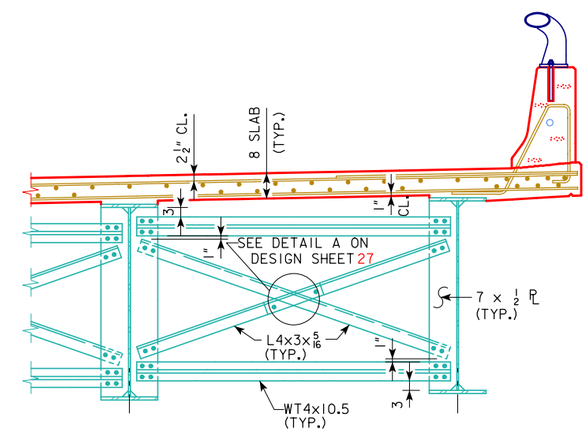

PART SECTION AT INTERMEDIATE DIAPHRAGM

(LOOKING NORTH)

NOTES:

ALL DIMENSIONS PERPENDICULAR TO U.S. 67 RAMP C BASELINE & ℄ ROADWAY UNLESS NOTED OTHERWISE.

FOR ADDITIONAL DETAILS, SEE DESIGN SHEET 27.

FOR EXPANSION JOINT DETAILS, SEE DESIGN NO. 3408.

SEE DESIGN SHEET 30 FOR ADDITIONAL STIFFENER AND WELDING DETAILS.

DESIGN FOR VARIABLE SKEW (L.A.)

278'-8 x 40' CONTINUOUS WELDED GIRDER BRIDGE W/14' BIKE TRAIL

139'-4 END SPAN — 139'-4 INTERIOR SPANS

TRANSVERSE SECTION

STA. 3589+46.06, BASELINE U.S. 67 RAMP C — TBD

SCOTT COUNTY

IOWA DEPARTMENT OF TRANSPORTATION - HIGHWAY DIVISION

DESIGN SHEET NO. 26 OF 64 FILE NO. 30253 DESIGN NO. 3608

benesch engineers · scientists · planners
Alfred Benesch & Company
205 North Michigan Avenue, Suite 2400
Chicago, Illinois 60601
312-565-0450 Job No. 10061

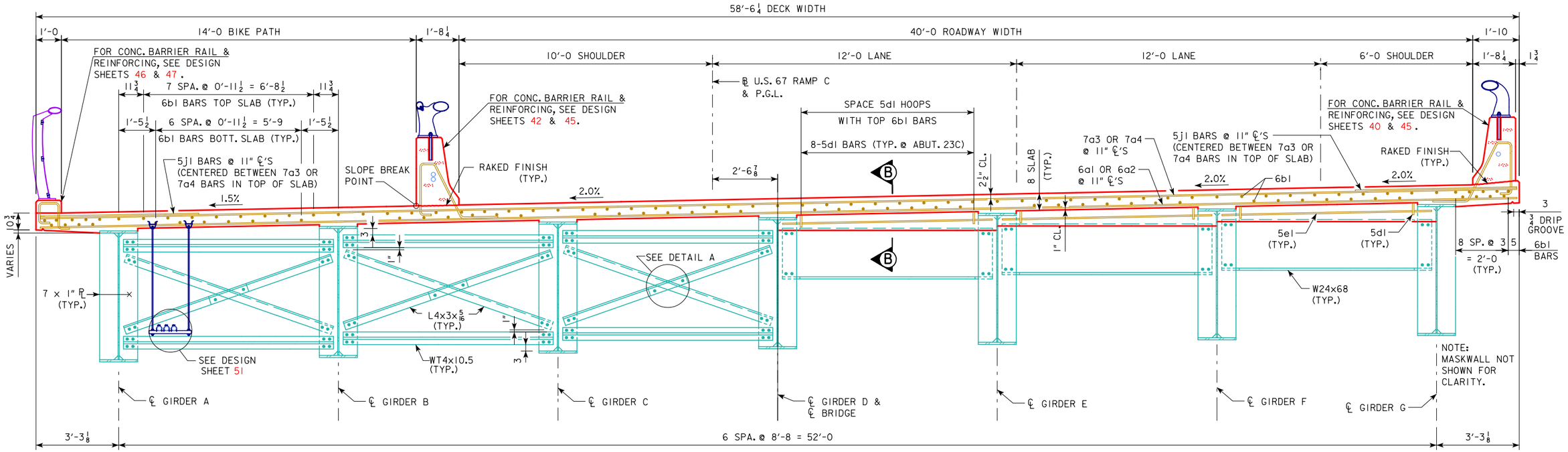

PART SECTION AT PIER 22C

(LOOKING NORTH)

FOR TRANSVERSE SECTION NOTES SEE DESIGN SHEET 26.

SLAB AREA = 40.24 SQ. FT.
SLAB AREA DOES NOT INCLUDE THE HAUNCH.

PART SECTION AT ABUTMENT 23C

(LOOKING NORTH)

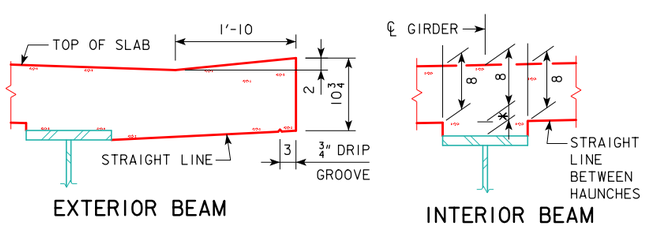

EXTERIOR BEAM

INTERIOR BEAM

TYP. SLAB & HAUNCH DETAIL

* CONCRETE HAUNCH DIMENSION MEASURED BETWEEN BOTTOM OF SLAB AND TOP OF TOP FLANGE PLATE AS SHOWN ON THE "THEORETICAL CONCRETE HAUNCH DIAGRAM" SHOWN ELSEWHERE ON THESE PLANS.

THE MAXIMUM EMBEDMENT OF THE EDGE OF THE TOP FLANGE IN THE SLAB SHALL BE 1/2 INCH. SHEAR STUDS ARE TO HAVE A MINIMUM PENETRATION OF 2 INCHES INTO THE SLAB AND BE AT LEAST 2 1/2 INCHES CLEAR OF THE TOP OF THE SLAB. THESE REQUIREMENTS WERE USED IN SETTING THE MAXIMUM AND MINIMUM ALLOWABLE FIELD HAUNCH VALUES SHOWN IN THE "MISCELLANEOUS DATA TABLE" SHOWN ELSEWHERE ON THESE PLANS.

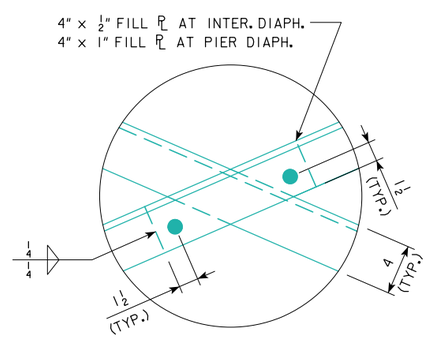

DETAIL A

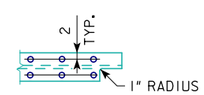

TYPICAL CUT & GRIND DETAIL

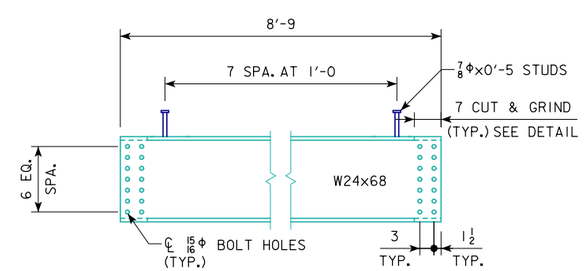

EXPANSION JOINT DIAPHRAGM DETAIL

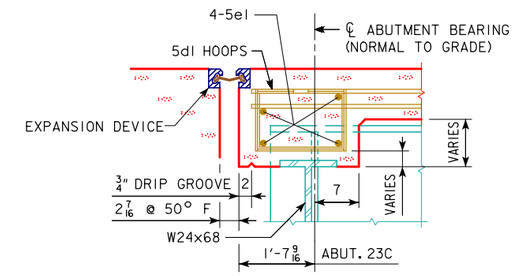

SECTION B-B

(NORMAL TO ABUTMENT)

NOTE: TRANSVERSE SLAB REINFORCING NOT SHOWN. PLACE 5d1 HOOPS PARALLEL TO LONGIT. 6b1 BARS.

NOTE: SEE EXPANSION DEVICE DETAILS FOR ADDITIONAL CONCRETE FINISHING DETAILS ON BIKE TRAIL.

DESIGN FOR VARIABLE SKEW (L.A.)

278'-8 x 40' CONTINUOUS WELDED GIRDER BRIDGE W/14' BIKE TRAIL

139'-4 END SPAN 139'-4 INTERIOR SPANS

TRANSVERSE SECTIONS

STA. 3589+46.06, BASELINE U.S. 67 RAMP C TBD

SCOTT COUNTY

IOWA DEPARTMENT OF TRANSPORTATION - HIGHWAY DIVISION

DESIGN SHEET NO. 27 OF 64 FILE NO. 30253 DESIGN NO. 3608

benesch engineers · scientists · planners
Alfred Benesch & Company
205 North Michigan Avenue, Suite 2400
Chicago, Illinois 60601
312-565-0450 Job No. 10061

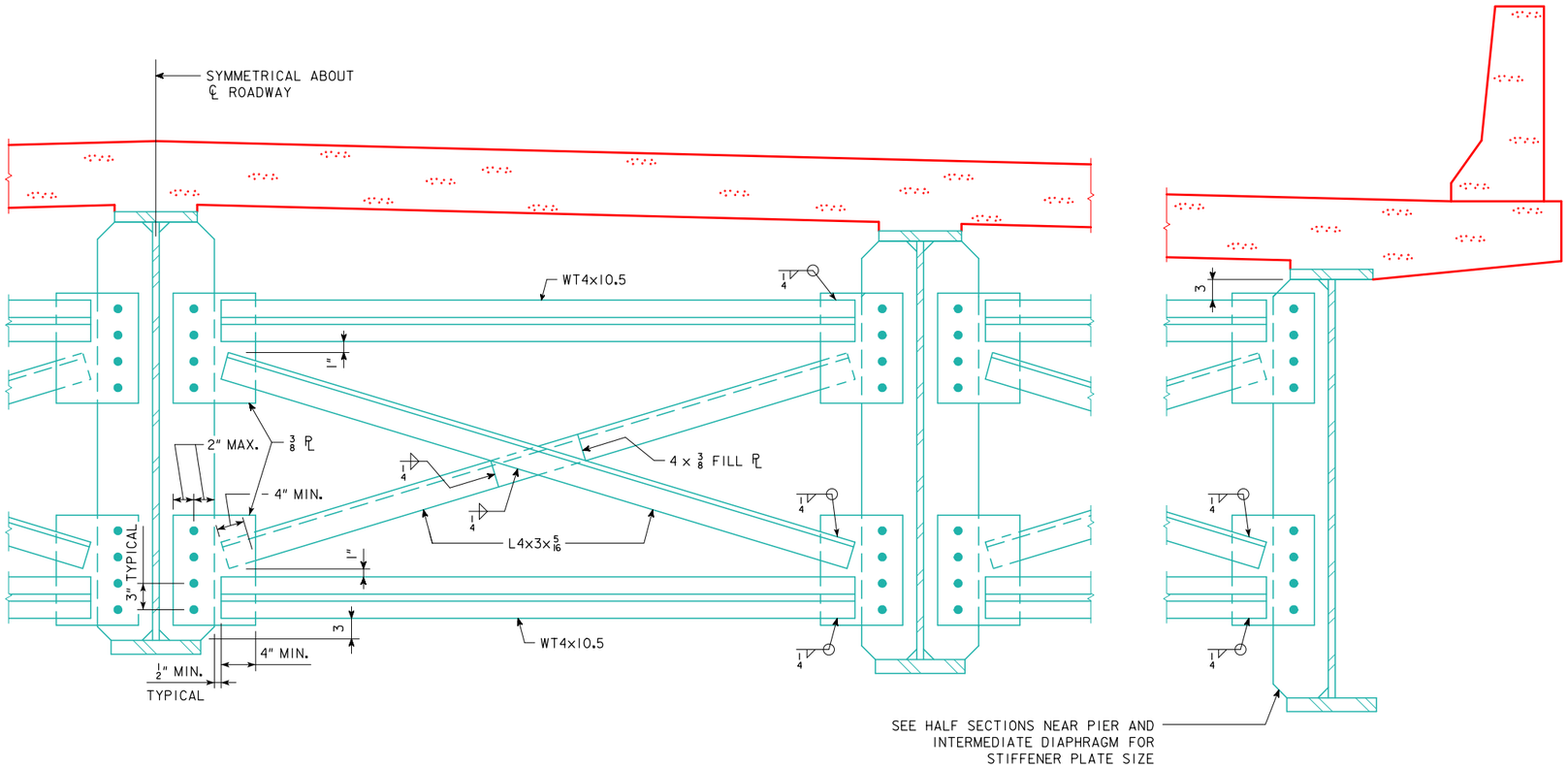

ALTERNATE INTERMEDIATE DIAPHRAGM PART SECTION THRU SLAB

(SHOWING ONE DIAPHRAGM BETWEEN GIRDERS)

NOTE:
THIS CANNOT BE WELDED FROM ONE SIDE. CROSS FRAME MUST BE TURNED OVER TO ADD SECOND ANGLE.

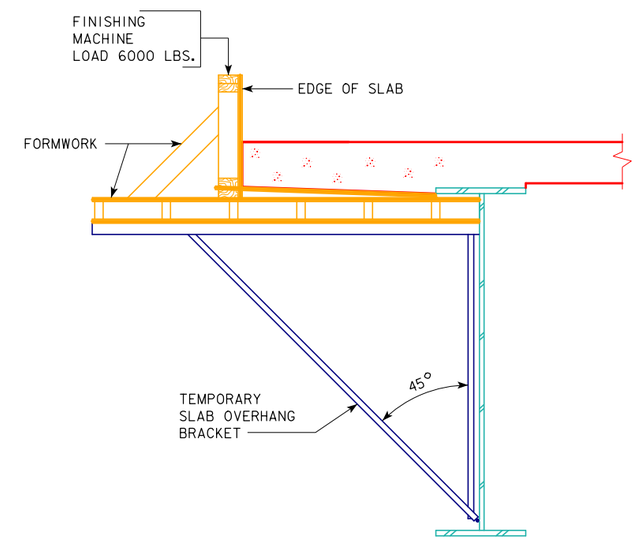

TEMPORARY SLAB OVERHANG BRACKET DETAIL

OVERHANG BRACKET NOTES:

A MAXIMUM FINISHING MACHINE LOAD AND THE ANGLE OF THE DIAGONAL MEMBER OF THE OVERHANG BRACKET SHOWN WERE ASSUMED BY THE DESIGNER. THESE ASSUMPTIONS, IN ADDITION TO OTHER CONSTRUCTION LOADINGS, WERE USED TO CHECK THE STRENGTH OF THE EXTERIOR GIRDER DURING CRITICAL STAGES OF CONSTRUCTION. IF THE FINISHING MACHINE LOAD OR ANGLE OF THE DIAGONAL MEMBER OF THE OVERHANG BRACKET DEVIATE SIGNIFICANTLY FROM VALUES SHOWN, THE CONTRACTOR SHALL SUBMIT TO THE ENGINEER THIS INFORMATION ON PROPOSED CONSTRUCTION EQUIPMENT TO BE USED.

IF THE VERTICAL HEIGHT OF THE OVERHANG BRACKET IS ADJUSTABLE, THE BASE OF THE BRACKET IS TO BE LOCATED AS CLOSE AS POSSIBLE TO THE BOTTOM FLANGE OF THE GIRDER.

ALTERNATE INTERMEDIATE DIAPHRAGM NOTES:

ALL FIELD CONNECTIONS ARE TO BE BOLTED USING "HIGH TENSILE STRENGTH BOLTS". UNLESS OTHERWISE NOTED, ALL OPEN HOLES ARE TO BE 15/16"Φ AND ALL BOLTS ARE TO BE 7/8"Φ.

THE DESIGN DRAWINGS INDICATE AWS PREQUALIFIED WELDED JOINTS. ALTERNATE JOINT DETAILS MAY BE SUBMITTED FOR APPROVAL.

MAGNETIC PARTICLE INSPECTION OF WELDS, IN ACCORDANCE WITH ARTICLE 2408.03, B, 6.7, NONDESTRUCTIVE TESTING, OF THE STANDARD SPECIFICATIONS.

STRUCTURAL STEEL QUANTITIES ARE BASED ON THE INTERMEDIATE DIAPHRAGM SHOWN ON TYPICAL CROSS SECTION ELSEWHERE IN THESE PLANS. NO ADJUSTMENT TO QUANTITIES WILL BE MADE IF THE CONTRACTOR USES THIS ALTERNATE INTERMEDIATE DIAPHRAGM DETAIL.

benesch
engineers · scientists · planners
Alfred Benesch & Company
205 North Michigan Avenue, Suite 2400
Chicago, Illinois 60601
312-565-0450 Job No. 10061

DESIGN FOR VARIABLE SKEW (L.A.)

278'-8 x 40' CONTINUOUS WELDED GIRDER BRIDGE W/14' BIKE TRAIL

139'-4 END SPAN 139'-4 INTERIOR SPANS

ALT. DIAPH. & TEMP. OVERHANG BRACKET

STA. 3589+46.06, BASELINE U.S. 67 RAMP C TBD

SCOTT COUNTY

IOWA DEPARTMENT OF TRANSPORTATION - HIGHWAY DIVISION

DESIGN SHEET NO. 28 OF 64 FILE NO. 30253 DESIGN NO. 3608

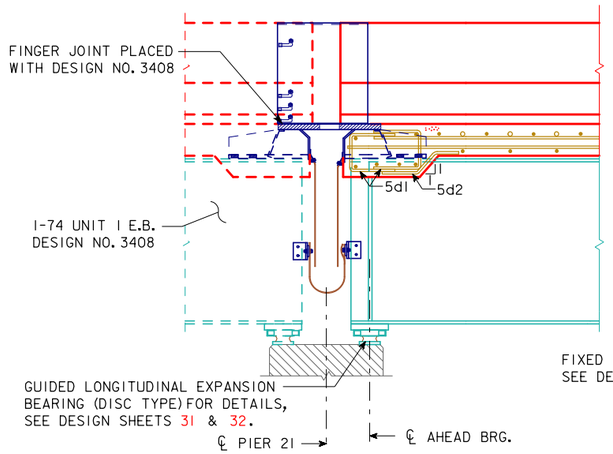

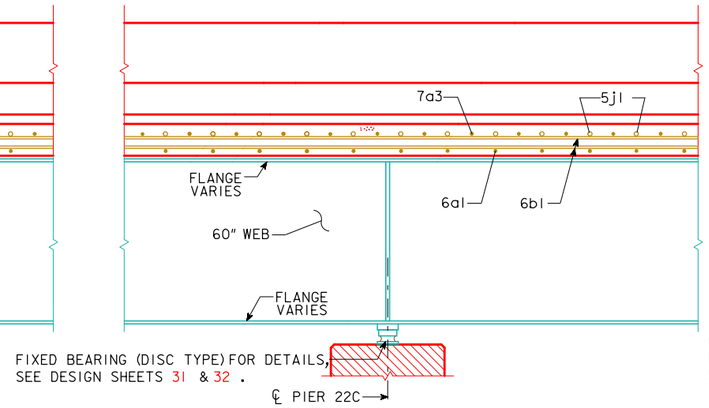

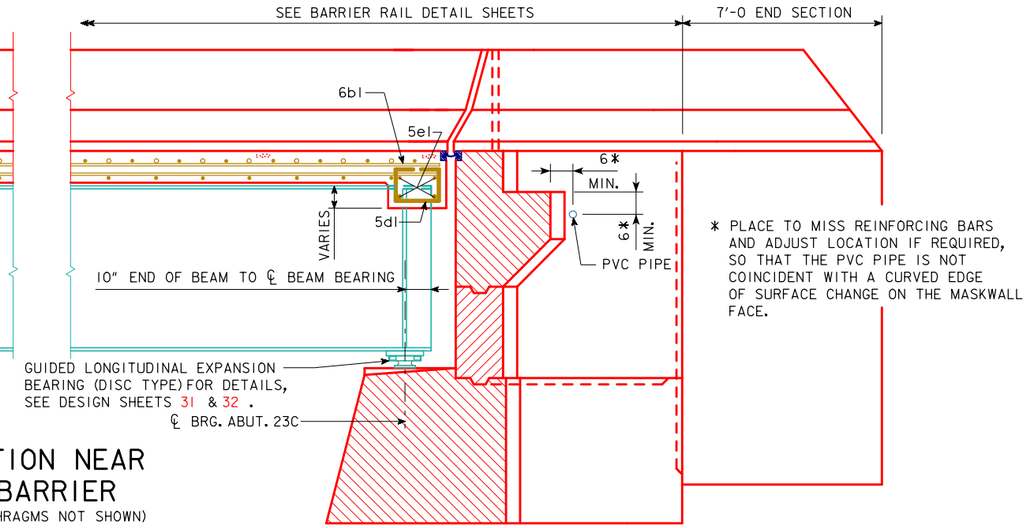

PART LONGITUDINAL SECTION NEAR TRAFFIC AND BICYCLE BARRIER

(LOOKING WEST) (STEEL RAILING AND STEEL DIAPHRAGMS NOT SHOWN)

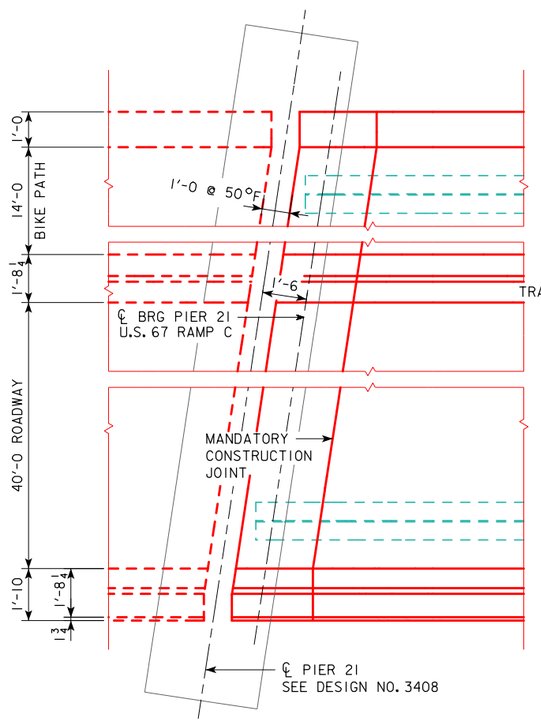

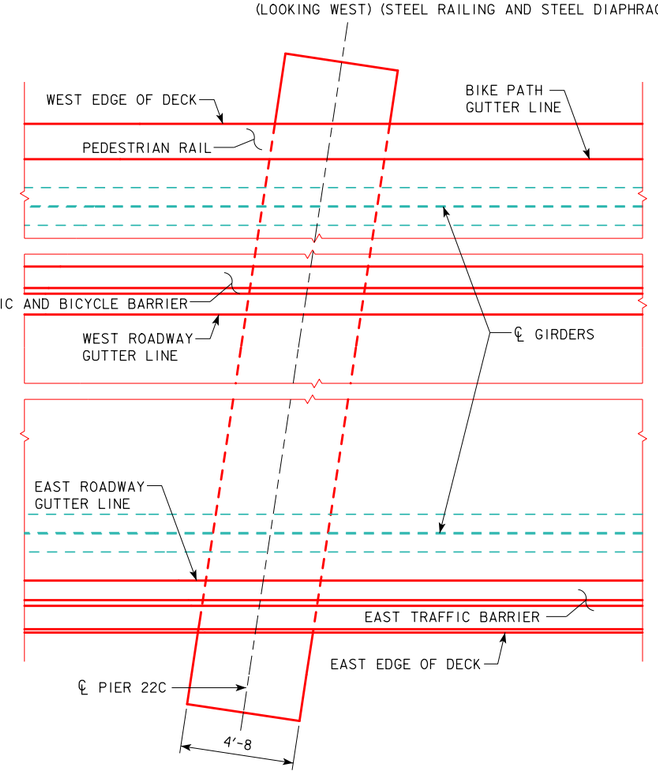

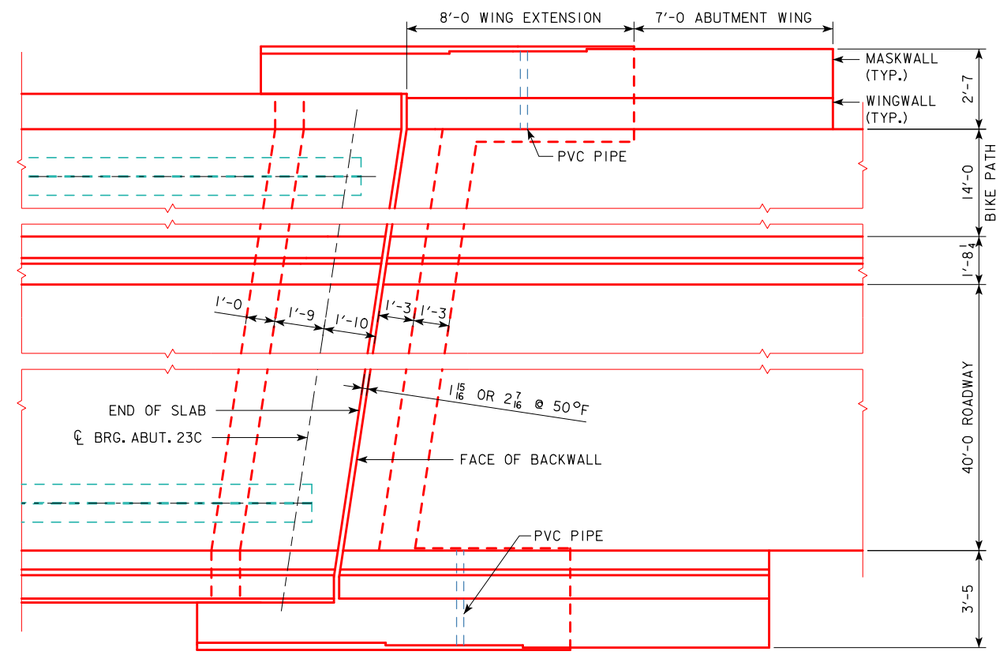

PART PLAN

(STEEL DIAPHRAGMS NOT SHOWN)

N

NOTES:

PLUG 3" Φ PVC PIPE WITH EXPANDING FOAM PRIOR TO BACKFILLING BEHIND ABUTMENTS.
EXPANSION DEVICES NOT SHOWN.
FOR MANDATORY CONSTRUCTION JOINT, SEE DESIGN SHEET 34.
FOR LIGHTING DETAILS, SEE DESIGN SHEETS 51 THROUGH 53.

benesch engineers · scientists · planners
Alfred Benesch & Company
205 North Michigan Avenue, Suite 2400
Chicago, Illinois 60601
312-565-0450 Job No. 10061

DESIGN FOR VARIABLE SKEW (L.A.)

278'-8 x 40' CONTINUOUS WELDED GIRDER BRIDGE W/14' BIKE TRAIL

139'-4 END SPAN 139'-4 INTERIOR SPANS

LONGITUDINAL SECTION

STA. 3589+46.06, BASELINE U.S. 67 RAMP C TBD

SCOTT COUNTY

IOWA DEPARTMENT OF TRANSPORTATION - HIGHWAY DIVISION

DESIGN SHEET NO. 29 OF 64 FILE NO. 30253 DESIGN NO. 3608

2:24:49 PM untitled c:\pwise_work\do_not_delete\dms05641\82074200.brg
MODEL: $MODEL

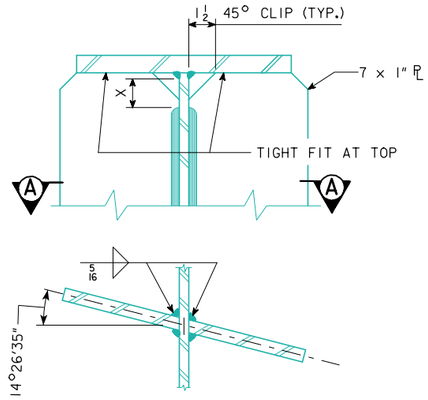

SECTION A-A

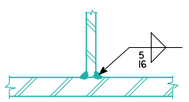

SECTION B-B

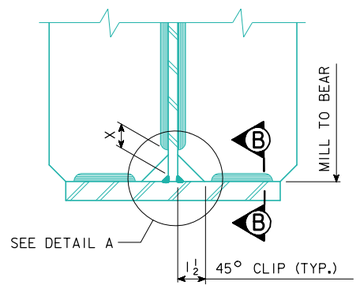

ALL ABUTMENT BEARING STIFFENERS,
PIER BEARING STIFFENERS,
AND JACKING STIFFENERS

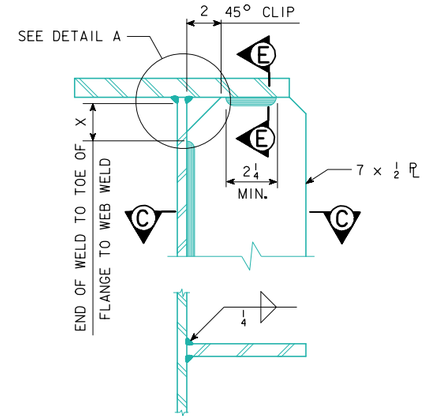

SECTION C-C

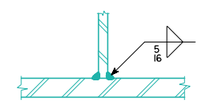

SECTION E-E

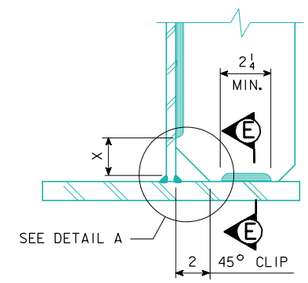

INTERMEDIATE CROSS FRAME
STIFFENER WELDED ATTACHMENT
TO FLANGES

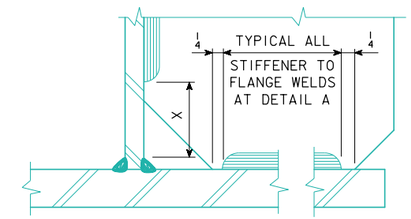

DETAIL A

T - WEB THICKNESS	x = 5T WITH 2 1/4" MINIMUM
9/16	2 13/16
5/8	3 1/8

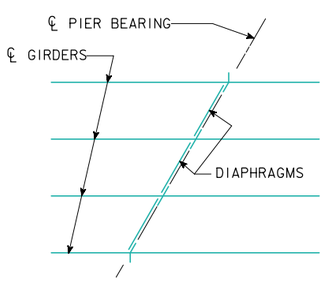

DIAPHRAGMS PARALLEL
TO ℄ OF PIER

FLANGE DEFLECTORS ARE REQUIRED ON THE OUSTIDE OF THE EXTERIOR GIRDERS AT THE DOWNSTATION SIDE OF PIER 21, PIER 22C, AND ABUTMENT 23C.

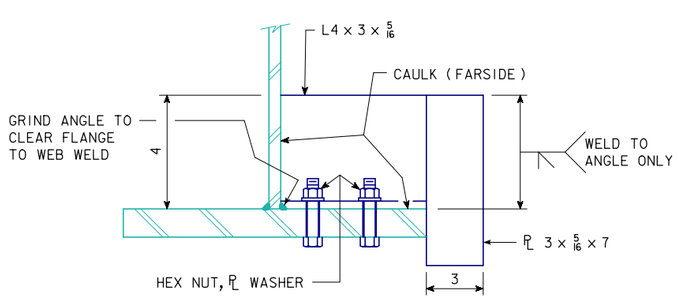

SECTION G-G

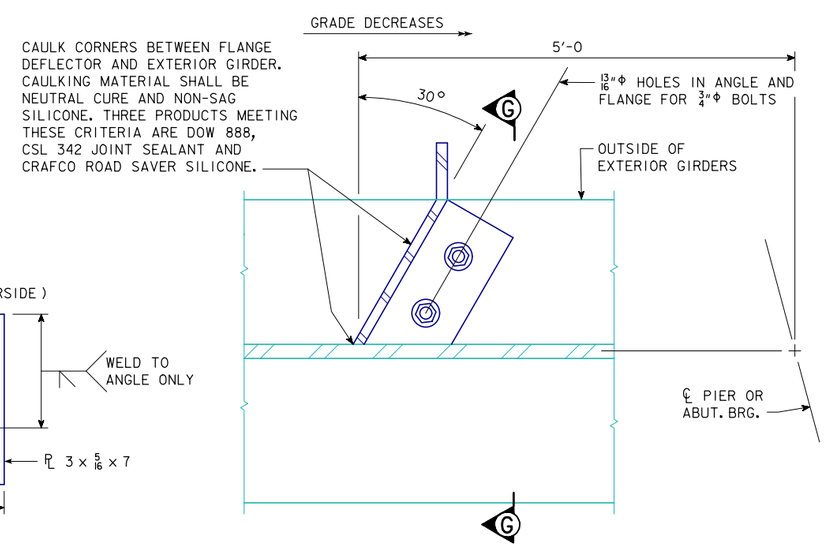

FLANGE DEFLECTOR DETAILS
(6 REQUIRED PER BRIDGE)

NOTE:

THIS SHEET IS PRIMARILY FOR THE USE OF FABRICATOR'S WORKERS AND IOWA DEPARTMENT OF TRANSPORTATION INSPECTORS IN INTERPRETING PLAN DETAILS. IT COVERS THE LOCATIONS OF WELD TERMINI THAT ARE NOT SPECIFIED BY TYPICAL WELD SYMBOLS.

DESIGN FOR VARIABLE SKEW (L.A.)

278'-8 x 40' CONTINUOUS WELDED GIRDER BRIDGE W/14' BIKE TRAIL

139'-4 END SPAN 139'-4 INTERIOR SPANS

WELDING DETAILS

STA. 3589+46.06, BASELINE U.S. 67 RAMP C TBD

SCOTT COUNTY

IOWA DEPARTMENT OF TRANSPORTATION - HIGHWAY DIVISION

DESIGN SHEET NO. 30 OF 64 FILE NO. 30253 DESIGN NO. 3608

benesch engineers · scientists · planners
Alfred Benesch & Company
205 North Michigan Avenue, Suite 2400
Chicago, Illinois 60601
312-565-0450 Job No. 10061

2:24:55 PM untitled c:\pwise_work\do_not_delete\dms05641\82074200.brg
MODEL: $MODEL

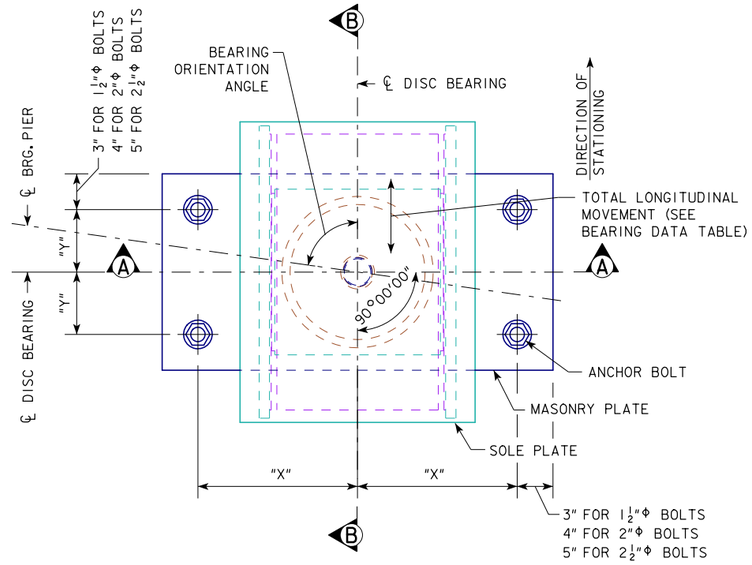

PLAN
(GIRDER NOT SHOWN FOR CLARITY)

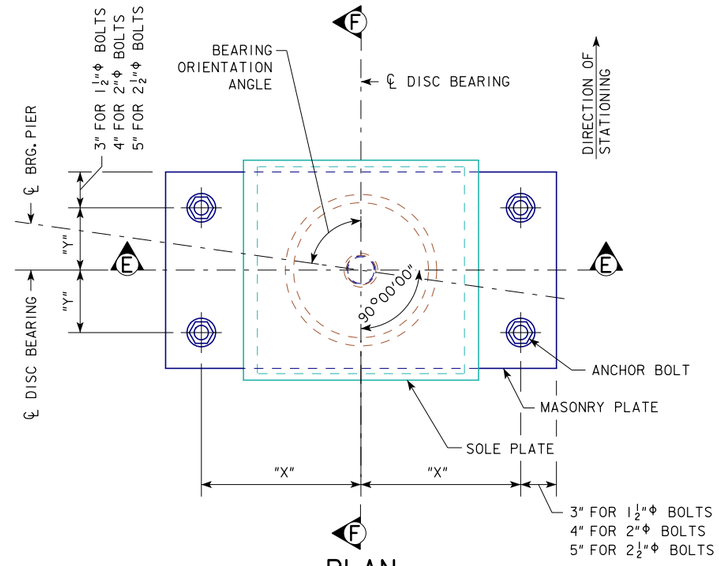

PLAN
(GIRDER NOT SHOWN FOR CLARITY)

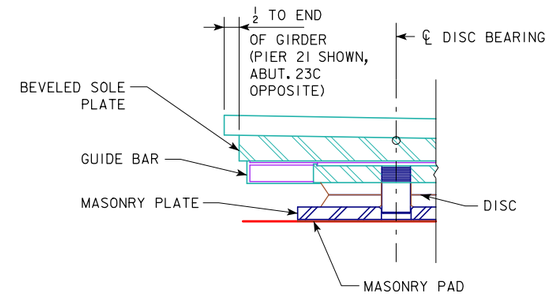

DETAIL A

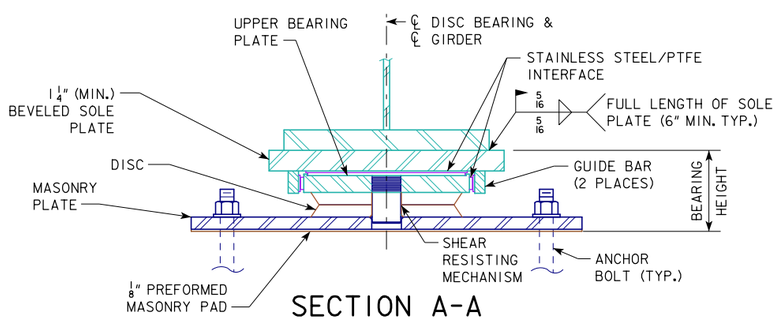

SECTION A-A

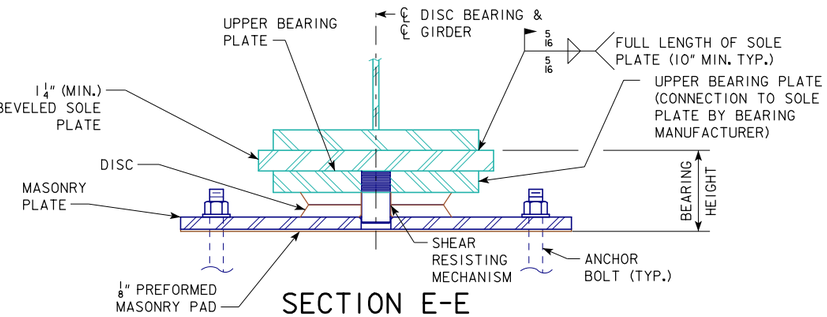

SECTION E-E

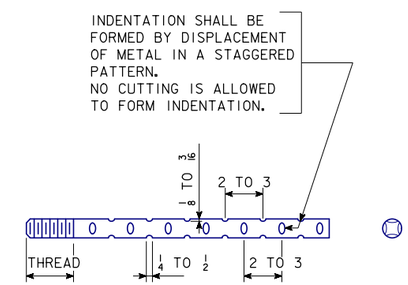

ANCHOR BOLT SWEDGE DETAIL

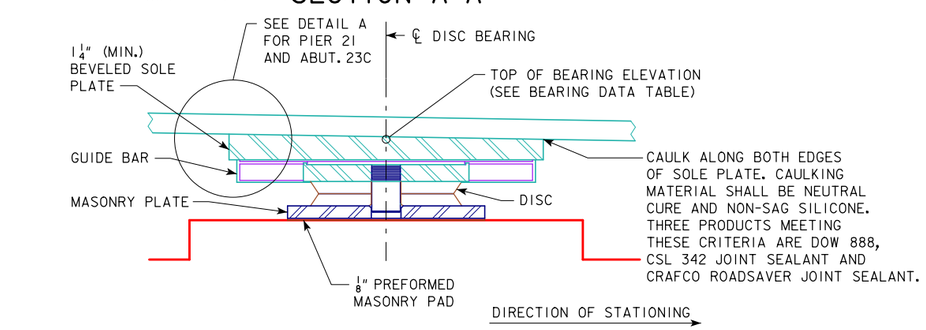

SECTION B-B
(SHOWING NEGATIVE LONGITUDINAL SLOPE)

GUIDED LONGITUDINAL EXPANSION BEARING - TYPE LG

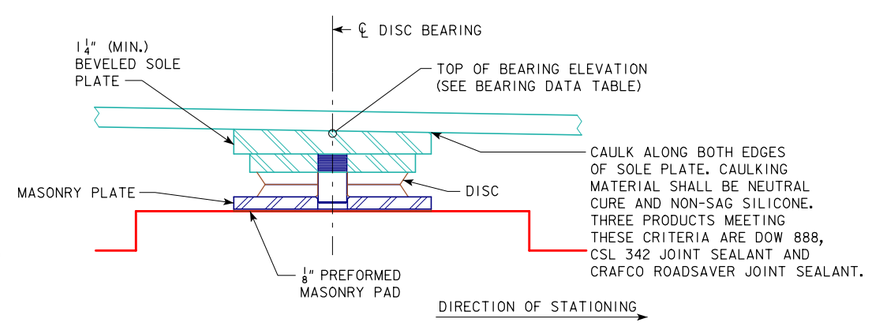

SECTION F-F
(SHOWING NEGATIVE LONGITUDINAL SLOPE)

FIXED BEARING - TYPE FX

NOTE:

SEE DESIGN SHEET 32 FOR NOTES AND BEARING DATA TABLES.

DESIGN FOR VARIABLE SKEW (L.A.)

278'-8 x 40' CONTINUOUS WELDED GIRDER BRIDGE W/14' BIKE TRAIL

139'-4 END SPAN 139'-4 INTERIOR SPANS

BEARING DETAILS

STA. 3589+46.06, BASELINE U.S. 67 RAMP C TBD

SCOTT COUNTY

IOWA DEPARTMENT OF TRANSPORTATION - HIGHWAY DIVISION

DESIGN SHEET NO. 31 OF 64 FILE NO. 30253 DESIGN NO. 3608

benesch engineers · scientists · planners
Alfred Benesch & Company
205 North Michigan Avenue, Suite 2400
Chicago, Illinois 60601
312-565-0450 Job No. 10061

2:25:02 PM untitled c:\pwise_work\do_not_delete\dms05641\82074200.brg
MODEL: $MODEL

BEARING DATA TABLE

LOCATION	BEARING TYPE	BEAM LINE	* TOP OF BEARING ELEVATION	LONGITUDINAL SLOPE OF SOLE PLATE	ASSUMED BEARING HEIGHT	VERTICAL LOAD				HORIZONTAL LOAD						TOTAL DESIGN MOVEMENT		** MAX. DESIGN ROTATION	BEARING ORIENTATION ANGLE	ANCHOR BOLTS		
						STRENGTH		SERVICE		STRENGTH		SERVICE		EXTREME EVENT						DIMENSION "X"	DIMENSION "Y"	NUMBER AND SIZE
						MAX.	MIN.	MAX.	MIN.	TRANSV.	LONGIT.	TRANSV.	LONGIT.	TRANSV.	LONGIT.	TRANSV.	LONGIT.					
				(%)	(IN.)	(KIPS)	(KIPS)	(KIPS)	(KIPS)	(KIPS)	(KIPS)	(KIPS)	(KIPS)	(KIPS)	(KIPS)	(IN.)	(IN.)	(RAD.)	(DEG.)	(IN.)	(IN.)	(EA. BRG.)
PIER 21	LG	A	590.84	-2.63	7	285	39	184	62	7	5	3	4	18	0	0.00	2.12	0.004	75°33′25″	12	4	4 - $1\frac{1}{2}$ in DIA.
		B	591.10	-2.80																		
		C	591.32	-2.79																		
		D	591.55	-2.72																		
		E	591.79	-2.77																		
		F	592.02	-2.76																		
		G	592.18	-2.61																		
PIER 22C	FX	A	586.62	-3.44	$7\frac{7}{8}$	710	205	478	255	14	21	5	13	64	100	0.00	0.00	0.002	75°33′25″	$12\frac{1}{2}$	7	4 - 2 in DIA.
		B	586.85	-3.46																		
		C	587.08	-3.45																		
		D	587.32	-3.43																		
		E	587.57	-3.42																		
		F	587.82	-3.41																		
		G	588.07	-3.40																		
ABUT. 23C	LG	A	581.25	-4.23	7	296	39	191	63	7	5	2	4	18	0	0.00	2.11	0.004	75°33′25″	12	4	4 - $1\frac{1}{2}$ in DIA.
		B	581.55	-4.04																		
		C	581.80	-4.03																		
		D	582.06	-4.07																		
		E	582.33	-4.00																		
		F	582.60	-3.99																		
		G	582.79	-4.11																		

* ELEVATION AT CENTER OF BEARING FOR USE IN SETTING FINAL BEAM SEAT ELEVATIONS.
** MAXIMUM FACTORED RESULTANT ROTATION. NOT INCLUDING 0.005 RADIANS FOR UNCERTAINTY ALLOWANCE OR 0.005 RADIANS FOR FABRICATION/INSTALLATION TOLERANCE.

DISC BEARING NOTES:

THE SOLE PLATES SHALL BE TAPERED TO THE LONGITUDINAL SLOPE SHOWN, AND SHALL BE SIZED FOR THE MOVEMENTS SHOWN IN THE BEARING DATA TABLE.

BEARINGS SHALL BE DESIGNED TO ACCOMMODATE A MINIMUM SERVICE ROTATION OF 0.02 RADIANS IN EACH DIRECTION.

ALL BEARINGS SHALL BE DESIGNED TO BE FULLY REMOVABLE. A THREE-PLATE CONFIGURATION (AS ILLUSTRATED IN THESE PLANS) MAY BE USED IF THE BEARING CAN BE REMOVED UNDER A MAXIMUM JACKING HEIGHT OF $\frac{1}{2}$". A FOUR-PLATE CONFIGURATION, UTILIZING A LOWER BEARING PLATE EITHER WELDED OR BOLTED TO THE MASONRY PLATE, SHALL BE CONSIDERED TO BE AN ACCEPTABLE ALTERNATIVE TO THE DETAIL SHOWN.

SEE "JACKING NOTES" ELSEWHERE IN THESE PLANS FOR ADDITIONAL FUTURE JACKING PROVISIONS.

FOR GUIDED EXPANSION BEARINGS, STAINLESS STEEL SURFACES SHALL EXTEND A MINIMUM OF 1 INCH EACH WAY BEYOND THE SPECIFIED MOVEMENT RANGE.

TOTAL MOVEMENT SHOWN IN THE BEARING DATA TABLE REPRESENTS THE COMBINED MOVEMENT RANGE FOR BRIDGE EXPANSION (50° F TO 125° F) AND BRIDGE CONTRACTION (50° F TO -25° F).

ALL BEARINGS SHALL BE MARKED PRIOR TO SHIPPING. THE MARKS SHALL INCLUDE THE BEARING LOCATION ON THE BRIDGE, AND A DIRECTION ARROW THAT POINTS UPSTATION. ALL MARKS SHALL BE PERMANENT AND BE VISIBLE AFTER THE BEARING IS INSTALLED. THE MARKS SHALL BE ON THE TOP PLATE OF THE BEARING.

THE GAP BETWEEN THE GUIDE BARS AND THE BEARINGS SHALL BE $\frac{1}{8}$ INCH.

NON-STAINLESS STEEL COMPONENTS OF BEARING ASSEMBLIES SHALL BE OF ASTM A709 GRADE 50W STEEL.

THE BEARING HEIGHT NOTED IN THE DISC BEARING DATA TABLE REPRESENTS THE ASSUMED TOTAL HEIGHT OF THE BEARING ASSEMBLY PLUS THE $\frac{1}{8}$ INCH PREFORMED MASONRY PAD. THIS HEIGHT WAS USED BY THE DESIGNER TO ESTABLISH THE PEDESTAL (OR STEP) ELEVATIONS AS NOTED ON PIER AND ABUTMENT DETAIL SHEETS. THE MINIMUM PEDESTAL HEIGHT, DEPTH OF CAP, AND/OR COLUMN HEIGHT, AS SHOWN ON THE PIER DRAWINGS, SHALL NOT BE CHANGED WITHOUT WRITTEN APPROVAL OF THE ENGINEER. THE ACTUAL BEARING HEIGHT DETERMINED BY THE BEARING MANUFACTURER SHALL BE USED TO SET THE TOP OF PEDESTAL (OR STEP) AND PIER CAP ELEVATIONS TO ACHIEVE THE PROPER TOP OF BEARING ELEVATIONS GIVEN IN THE BEARING DATA TABLE. THE LOW PEDESTAL (OR STEP) ELEVATION MAY NOT BE LOWERED. THE TOP OF PEDESTAL (OR STEP) AND PIER CAP ELEVATIONS SHALL BE SHOWN ON THE SHOP DRAWINGS.

IN ORDER TO COORDINATE TOP OF PEDESTAL (OR STEP) ELEVATIONS AND ANCHOR BOLT LOCATIONS, PIERS AND ABUTMENTS SHALL NOT BE POURED PRIOR TO RECEIVING APPROVED BEARING SHOP DRAWINGS FOR THIS CONTRACT.

ANCHOR BOLTS, NUTS, AND WASHERS SHALL MEET THE REQUIREMENTS OF I.M. 453.08. ANCHOR BOLTS SHALL BE PER ASTM F1554, GRADE 36, MINIMUM. ANCHOR BOLT LAYOUT SHOWN IN THE DETAILS IS BASED ON PRELIMINARY BEARING DESIGN PROVIDED BY TWO BEARING VENDORS. THE ANCHOR BOLT LAYOUTS SHOWN ON THE DETAIL SHEETS WERE USED IN SETTING THE GEOMETRY OF THE PIER AND ABUTMENT REINFORCING TO ALLOW THE ANCHOR BOLTS TO BE INSTALLED WITHOUT CONFLICT WITH THE REINFORCING. WHEN PLACING ANCHOR BOLTS, CAP REINFORCEMENT SHALL BE AVOIDED. ANY CHANGES TO THE ANCHOR BOLT PATTERN MAY REQUIRE A PLAN CHANGE TO THE REINFORCING LAYOUT.

ANCHOR BOLTS SHALL BE EMBEDDED INTO THE PIER CAP A MINIMUM OF 1′-3 FOR $1\frac{1}{2}$"Φ, 2′-0 FOR 2"Φ AND 2′-6 FOR $2\frac{1}{2}$"Φ. FABRICATOR SHALL DETERMINE REQUIRED ANCHOR BOLT LENGTH BASED ON BEARING DETAILS AND REQUIRED ANCHOR BOLT EMBEDMENT. SHOP DRAWINGS SHALL SHOW ANCHOR BOLT EMBEDMENT, PROJECTION, THREAD LENGTH, AND TOTAL BOLT LENGTH.

FIELD WELDING SHALL MEET THE REQUIREMENTS OF MATERIALS I.M. 558. MAGNETIC PARTICLE INSPECTION OF WELDS, IN ACCORDANCE WITH THE STANDARD SPECIFICATIONS, WILL BE REQUIRED FOR ALL FIELD WELDS. THE FIELD WELD LENGTH AND/OR SIZE SHOWN ON THE PLANS MAY BE REDESIGNED BY THE CONTRACTOR; IT SHALL BE DESIGNED TO ACCOMMODATE THE GOVERNING HORIZONTAL LOAD SHOWN IN THE BEARING DATA TABLE.

THE BEARINGS SHALL BE DESIGNED FOR THE SERVICE, STRENGTH AND EXTREME EVENT LOADS OCCURING SIMULTANEOUSLY WITH THE ROTATIONS AND MOVEMENTS SHOWN IN THE BEARING DATA TABLE. SEE SECTION 2434 OF THE STANDARD SPECIFICATIONS FOR ADDITIONAL REQUIREMENTS.

BEARING SETTING DATA

TEMP. (F.)	OFFSET (IN.)		
	PIER 21	PIER 22C	ABUT. 23
90°	$-\frac{3}{16}$	0	$\frac{5}{16}$
50°	$\frac{1}{4}$	0	$-\frac{1}{8}$
10°	$\frac{11}{16}$	0	$-\frac{9}{16}$

BEARING SETTINGS FOR OTHER TEMPERATURES ARE PROPORTIONAL.

POSITIVE SIGN - MOVE TOP OF BEARING ASSEMBLY UPSTATION.
ZERO - THE SOLE PLATE SHALL BE CENTERED OVER THE LOWER BEARING ASSEMBLY.
NEGATIVE SIGN - MOVE TOP OF BEARING ASSEMBLY DOWNSTATION.

TEMPERATURES SHOWN ARE CONCRETE PIER TEMPERATURES ON THE UNDERSIDE OR SHADED PORTION OF THE PIER CAP.

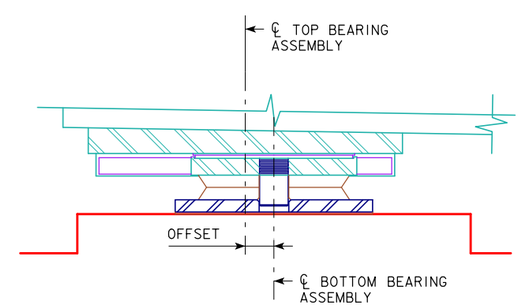

BEARING SETTING DETAIL

BENCH MARK NO. 500: STA. 6781+18.92 LT. 161.19′ ELEV. 575.797, CHISELED "X" IN BOLT E. SIDE CONCRETE STRUCTURE.

DESIGN FOR VARIABLE SKEW (L.A.)

278′-8 × 40′ CONTINUOUS WELDED GIRDER BRIDGE W/14′ BIKE TRAIL

139′-4 END SPAN 139′-4 INTERIOR SPANS

BEARING DETAILS

STA. 3589+46.06, BASELINE U.S. 67 RAMP C TBD

SCOTT COUNTY

IOWA DEPARTMENT OF TRANSPORTATION - HIGHWAY DIVISION

DESIGN SHEET NO. 32 OF 64 FILE NO. 30253 DESIGN NO. 3608

benesch engineers · scientists · planners
Alfred Benesch & Company
205 North Michigan Avenue, Suite 2400
Chicago, Illinois 60601
312-565-0450 Job No. 10061

2:25:09 PM untitled c:\pwise_work\do_not_delete\dms05641\82074200.brg
MODEL: $MODEL

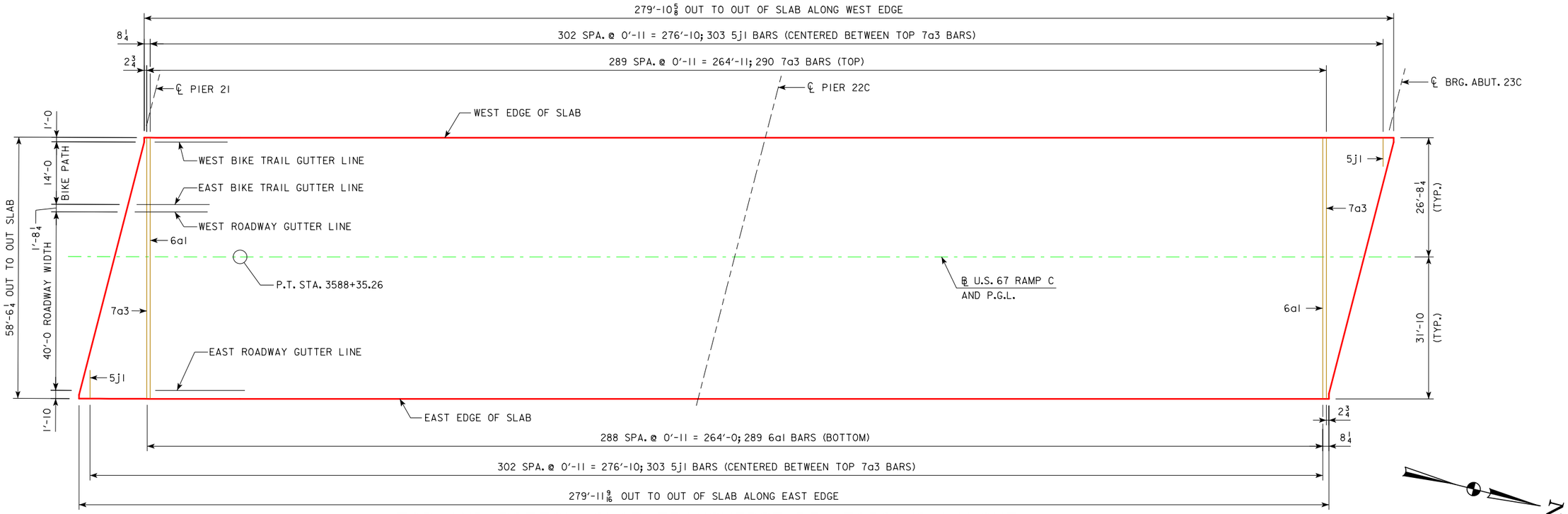

TOP AND BOTTOM SLAB TRANSVERSE REINFORCING LAYOUT

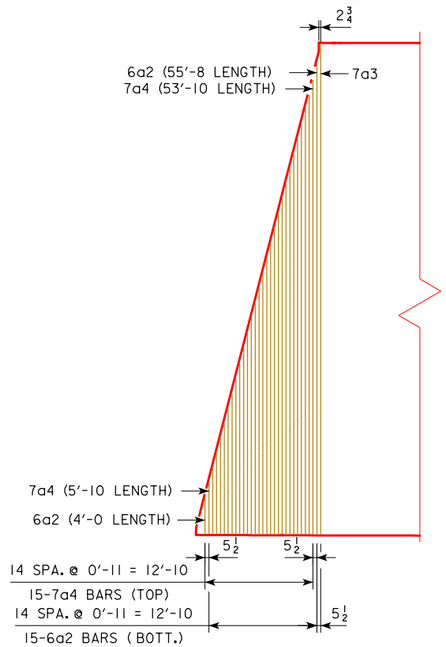

SOUTH END OF SLAB REINFORCING

(5j1 BARS NOT SHOWN FOR CLARITY)

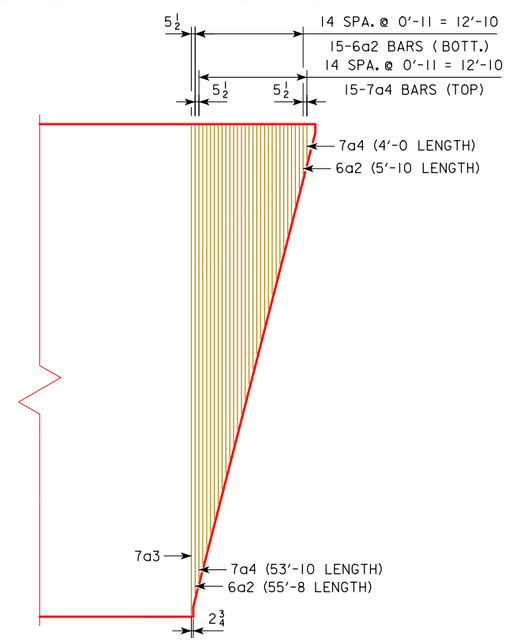

NORTH END OF SLAB REINFORCING

(5j1 BARS NOT SHOWN FOR CLARITY)

NOTES:

ALL TRANSVERSE DIMENSIONS ARE PERPENDICULAR TO U.S. 67 RAMP C BASELINE UNLESS NOTED OTHERWISE.

FOR LOCATIONS OF DECK DRAINS, SEE DESIGN SHEET 57.

FOR ADDITIONAL NOTES, LONGITUDINAL REINFORCING, & CONCRETE PLACEMENT DIAGRAM, SEE DESIGN SHEET 34.

DESIGN FOR VARIABLE SKEW (L.A.)

278'-8 x 40' CONTINUOUS WELDED GIRDER BRIDGE W/14' BIKE TRAIL

139'-4 END SPAN 139'-4 INTERIOR SPANS

TRANSV. SLAB REINFORCING LAYOUT

STA. 3589+46.06, BASELINE U.S. 67 RAMP C TBD

SCOTT COUNTY

IOWA DEPARTMENT OF TRANSPORTATION - HIGHWAY DIVISION

DESIGN SHEET NO. 33 OF 64 FILE NO. 30253 DESIGN NO. 3608

benesch engineers · scientists · planners
Alfred Benesch & Company
205 North Michigan Avenue, Suite 2400
Chicago, Illinois 60601
312-565-0450 Job No. 10061

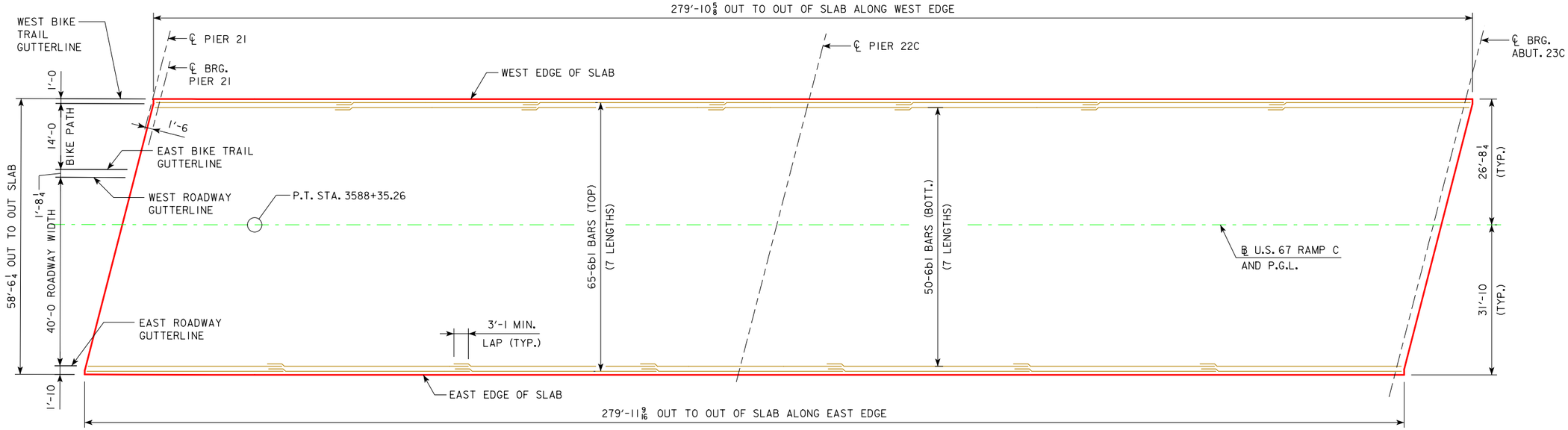

TOP AND BOTTOM SLAB LONGITUDINAL REINFORCING LAYOUT

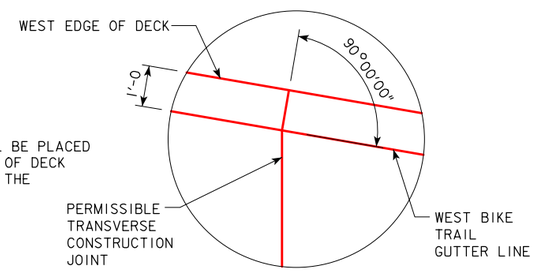

*SECTION (4) CONCRETE SHALL BE PLACED CONCURRENTLY WITH SECTION OF DECK ADJACENT TO THIS JOINT ON THE EASTBOUND VIADUCT UNIT 1.

BIKE TRAIL BARRIER JOINT DETAIL

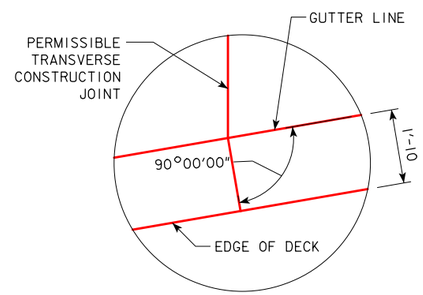

ROADWAY BARRIER JOINT DETAIL

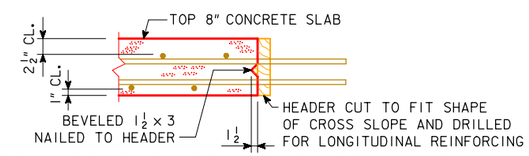

PERMISSIBLE TRANSVERSE SLAB CONSTRUCTION JOINT

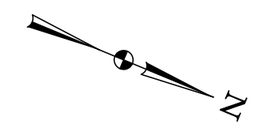

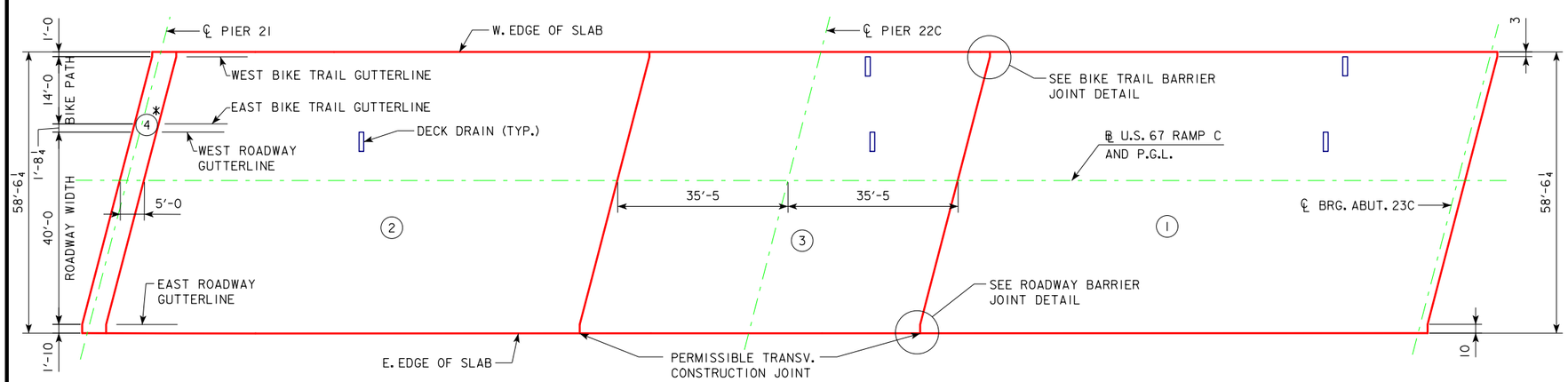

CONCRETE PLACEMENT DIAGRAM

NOTES:

CONCRETE DECK SLAB SHALL BE PLACED IN SECTIONS AND SEQUENCE INDICATED. ALTERNATE PROCEDURES FOR PLACING SLAB CONCRETE MAY BE SUBMITTED FOR APPROVAL TOGETHER WITH A STATEMENT OF THE PROPOSED METHOD AND EVIDENCE THAT THE CONTRACTOR POSSESSES THE NECESSARY EQUIPMENT AND FACILITIES TO ACCOMPLISH THE REQUIRED RESULTS.

NO LONGITUDINAL CONSTRUCTION JOINT SHALL BE PERMISSIBLE FOR ANY PORTION OF THE CONCRETE DECK SLAB.

ALL TRANSVERSE DIMENSIONS ARE PERPENDICULAR TO U.S. 67 RAMP C BASELINE UNLESS NOTED OTHERWISE.

FOR LOCATIONS OF DECK DRAINS, SEE DESIGN SHEET 57.

FOR TRANSVERSE REINFORCING, SEE DESIGN SHEET 33.

FOR LOCATIONS AND DETAILS OF LIGHT POLES, SEE DESIGN SHEETS 51 THRU 53.

WORK THIS SHEET WITH DESIGN SHEETS 26 & 27 FOR BAR SPACING DETAILS.

DESIGN FOR VARIABLE SKEW (L.A.)

278'-8 x 40' CONTINUOUS WELDED GIRDER BRIDGE W/14' BIKE TRAIL

139'-4 END SPAN — 139'-4 INTERIOR SPANS

LONGIT. SLAB REINFORCING LAYOUT

STA. 3589+46.06, BASELINE U.S. 67 RAMP C — TBD

SCOTT COUNTY

IOWA DEPARTMENT OF TRANSPORTATION - HIGHWAY DIVISION

DESIGN SHEET NO. 34 OF 64 FILE NO. 30253 DESIGN NO. 3608

benesch engineers · scientists · planners
Alfred Benesch & Company
205 North Michigan Avenue, Suite 2400
Chicago, Illinois 60601
312-565-0450 Job No. 10061

JACKING NOTES:

PROVISIONS FOR JACKING HAVE BEEN INCLUDED IN THIS DESIGN TO ALLOW FOR FUTURE MAINTENANCE.

THE JACKING STIFFENERS AND PIER CAPS ARE DESIGNED BASED ON THE COMBINED DEAD AND LIVE LOAD REACTIONS TABULATED IN THE MOMENT AND REACTION TABLES LISTED IN THESE PLANS. JACKING AND BEARING REPLACEMENT SHALL BE CONDUCTED IN A MANNER SUCH THAT THE SUPERSTRUCTURE WILL NOT BE DAMAGED. JACKS SHALL BE CENTERED UNDER THE WEB AND JACKING STIFFENER AND A STEEL PLATE SHALL BE PLACED BETWEEN THE TOP OF THE JACK AND THE BOTTOM OF THE FLANGE OF THE BEAM. STEEL PLATES SHALL BE PLACED UNDER JACKS BEARING DIRECTLY ON THE EXISTING SUBSTRUCTURE TO DISTRIBUTE THE JACKING LOAD AND PREVENT DAMAGE TO THE EXISTING CONCRETE.

DURING JACKING OPERATIONS, THE LIFTING OF THE STRUCTURE SHALL BE CONTROLLED SUCH THAT THE RELATIVE ELEVATION BETWEEN ADJACENT GIRDERS DOES NOT VARY BY MORE THAN $\frac{1}{8}$" FROM THEIR ORIGINAL ELEVATION DIFFERENTIAL. THE MAXIMUM ALLOWABLE VERTICAL JACKING DISPLACEMENT SHALL BE $\frac{1}{2}$" WITH RESPECT TO BEARINGS OF ADJACENT PIERS OR ABUTMENTS. IF ADDITIONAL JACKING HEIGHT IS REQUIRED TO FACILITATE BEARING REMOVAL, THE SUPERSTRUCTURE SHALL BE JACKED AT ADJACENT PIERS OR ABUTMENTS SUCH THAT THE MAXIMUM VERTICAL DIFFERENTIAL DISPLACEMENT BETWEEN ADJACENT PIERS OR ABUTMENTS DOES NOT EXCEED $\frac{1}{2}$". IF THE ENTIRE SUPERSTRUCTURE IS BEING RAISED A SIGNIFICANT AMOUNT TO MEET NEW PROFILE GRADE REQUIREMENTS, A SYNCHRONOUS LIFTING SYSTEM SHOULD BE USED TO CONTROL AND EQUALIZE INDIVIDUAL JACK PRESSURES TO INSURE THAT THE SUPERSTRUCTURE IS LIFTED UNIFORMLY WITHOUT EXCEEDING THE ABOVE STATED RELATIVE ELEVATION DIFFERENTIALS.

TRAFFIC SHALL NOT BE PERMITTED DIRECTLY OVER CRIBBED AREAS OF THE SUPERSTRUCTURE UNLESS THERE IS NO REASONABLE ALTERNATE METHOD OF ROUTING VEHICLES AND THE JACKING AND CRIBBING PLANS CONTAIN DETAILS WHICH WILL PROVIDE ADEQUATE HORIZONTAL AND VERTICAL STABILITY FOR THE SUPERSTRUCTURE. EFFECTS OF VIBRATIONS FROM TRAFFIC ON THE SUPERSTRUCTURE AND/OR NEAR THE SUBSTRUCTURE SHOULD BE CONSIDERED DURING JACKING AND BEARING REPLACEMENT OR REPAIRS. AT A MINIMUM, ANY CROSS FRAME BETWEEN ADJACENT JACKED AND UNJACKED GIRDERS SHALL BE DISCONNECTED TO REDUCE VIBRATION EFFECTS FROM TRAFFIC. VEHICLES SHALL NOT BE ALLOWED TO TRAVEL OVER UNCRIBBED AREAS OF THE STUCTURE SUPPORTED ONLY BY HYDRAULIC JACKS.

WHEN JACKING AT EXPANSION JOINTS, BARRIER COVER PLATES AND RAILING SPLICES SHALL BE REMOVED TO PREVENT DAMAGE TO THE JOINTS. EXPANSION JOINTS SHOULD ALSO BE INSPECTED TO VERIFY THAT THE JOINT ASSEMBLY WILL NOT BE DAMAGED BY JACKING.

THE BRIDGE SHALL BE INSPECTED PRIOR TO JACKING TO VERIFY THAT ITEMS CONNECTED TO THE SUPERSTRUCTURE OR SUBSTRUCTURE WILL NOT BE DAMAGED DURING THE JACKING AND BEARING REPLACEMENT PROCEDURE.

THE SUPERSTRUCTURE SHALL ONLY BE JACKED AT THE LOCATIONS SHOWN ON THE DRAWINGS. IT SHALL BE THE RESPONSIBILITY OF THE CONTRACTOR PERFORMING THE JACKING TO SIZE AND DESIGN THE REQUIRED JACKING EQUIPMENT AND CRIBBING AND TO ESTABLISH THE PROCEDURE FOR JACKING AND BEARING REPLACEMENT OR REPAIRS SUBJECT TO APPROVAL OF THE ENGINEER. JACKS SHALL HAVE A MINIMUM SAFE LOAD CAPACITY OF 150% OF THE LOAD SPECIFIED IN THE JACKING LOAD TABLE.

PROVISIONS SHALL BE MADE TO ACCOUNT FOR THERMAL MOVEMENTS DURING THE PERIOD THAT THE STRUCTURE IS RESTING ON JACKS OR CRIBBING.

NOTE:

DESIGNATION "-C" SIGNIFIES BAR ASSOCIATED WITH THE RAMP C BRIDGE. "-C" NOT SHOWN IN DETAILS FOR CLARITY.

HIGH PERFORMANCE STRUCTURAL CONCRETE PLACEMENT QUANTITIES

SUPERSTRUCTURE

LOCATION	QUANTITY
CONCRETE SECTION 1, SLAB	171.2
CONCRETE SECTION 2, SLAB	151.5
CONCRETE SECTION 3, SLAB	109.0
CONCRETE SECTION 4, SLAB	13.7
TOTAL (CU. YDS.)	445.4

ESTIMATED QUANTITIES

SUPERSTRUCTURE

ITEM	UNIT	QUANTITY
HIGH PERFORMANCE STRUCTURAL CONCRETE	CY	445.4
REINFORCING STEEL, EPOXY COATED	LB	142054
REINFORCING STEEL, STAINLESS STEEL	LB	6773
STRUCTURAL STEEL	LB	452196
STEEL EXTRUSION JOINT WITH NEOPRENE	LF	60.3
NEOPRENE GLAND INSTALLATION AND TESTING	LF	60.3
DISC BEARING ASSEMBLIES	EACH	21
STRUCTURAL STEEL (GRADE HPS 70W)	LB	68358

REINFORCING BAR LIST-SUPERSTRUCTURE

	BAR	LOCATION	SHAPE	NO.	LENGTH	WEIGHT
EPOXY COATED	6a1-C	SLAB, TRANSV. BOTT.		289	58'-2	25249
	6a2-C	SLAB, TRANSV. BOTT. - ENDS		30	VARIES	1386
	7a3-C	SLAB, TRANSV. TOP		290	58'-2	34479
	7a4-C	SLAB, TRANSV. TOP - ENDS		30	VARIES	1778
	6b1-C	SLAB, LONGIT. TOP & BOTT.		805	42'-8	51589
	5d1-C	ABUT. DIAPH. HOOPS		48	4'-3	213
	5d2-C	PIER DIAPH.		96	3'-6	350
	5d3-C	PIER DIAPH.		48	2'-10	142
	5e1-C	PIER & ABUT. DIAPH. LONGIT.		60	8'-7	537
	5j1-C	TOP OF SLAB TRANSV. (AT RAIL)		606	6'-3	3950
	BARRIER RAILS - SEE DESIGN SHEET 45					21737
	LIGHT POLE BASES - SEE DESIGN SHEET 53					378
	BARRIER RAIL END SECTION - SEE DESIGN SHEET 41					266
	REINFORCING STEEL, EPOXY COATED - TOTAL (LBS.)					142054
S.S. BARS						
	BARRIER RAILS - SEE DESIGN SHEET 45					6581
	BARRIER RAIL END SECTION - SEE DESIGN SHEET 41					192
	REINFORCING STEEL, STAINLESS STEEL - TOTAL (LBS.)					6773

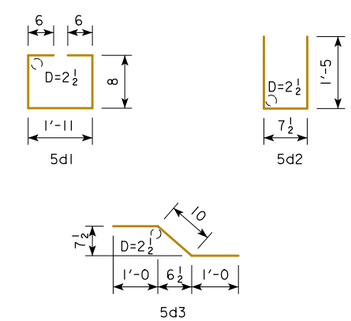

NOTE: ALL DIMENSIONS ARE OUT TO OUT. D= PIN DIAMETER.

BENT BAR DETAILS

DESIGN FOR VARIABLE SKEW (L.A.)

278'-8 x 40' CONTINUOUS WELDED GIRDER BRIDGE W/14' BIKE TRAIL

139'-4 END SPAN 139'-4 INTERIOR SPANS

SUPERSTRUCTURE BAR LIST

STA. 3589+46.06, BASELINE U.S. 67 RAMP C TBD

SCOTT COUNTY

IOWA DEPARTMENT OF TRANSPORTATION - HIGHWAY DIVISION

DESIGN SHEET NO. 35 OF 64 FILE NO. 30253 DESIGN NO. 3608

benesch engineers · scientists · planners
Alfred Benesch & Company
205 North Michigan Avenue, Suite 2400
Chicago, Illinois 60601
312-565-0450 Job No. 10061

BENCH MARK NO. 500: STA. 6781+18.92 LT. 161.19' ELEV. 575.797,
CHISELED "X" IN BOLT E. SIDE CONCRETE STRUCTURE.

TABLE OF BEAM LINE HAUNCH ELEVATIONS

	℄ BRG. PIER 21												℄ BOLT. SPL. #1				℄ PIER 22C				℄ BOLT. SPL. #2			
LOCATION	1	2	3	4	5	6	7	8	9	10	11	12	13	14	15	16	17	18	19	20	21	22	23	24
GIRDER A	596.12	595.94	595.74	595.54	595.32	595.10	594.86	594.61	594.34	594.06	593.77	593.47	593.16	592.84	592.52	592.20	591.89	591.60	591.30	591.01	590.73	590.44	590.15	589.84
GIRDER B	596.31	596.14	595.97	595.78	595.57	595.36	595.12	594.87	594.60	594.32	594.02	593.70	593.39	593.06	592.73	592.41	592.09	591.80	591.52	591.24	590.97	590.69	590.41	590.12
GIRDER C	596.53	596.36	596.19	596.00	595.80	595.58	595.35	595.09	594.82	594.54	594.24	593.93	593.62	593.29	592.96	592.65	592.33	592.04	591.76	591.48	591.21	590.93	590.65	590.36
GIRDER D	596.76	596.59	596.41	596.22	596.02	595.80	595.57	595.31	595.05	594.76	594.47	594.17	593.86	593.53	593.21	592.89	592.58	592.29	592.00	591.73	591.45	591.18	590.89	590.60
GIRDER E	596.99	596.82	596.65	596.46	596.26	596.05	595.81	595.56	595.30	595.02	594.72	594.42	594.11	593.78	593.46	593.14	592.83	592.54	592.26	591.98	591.71	591.44	591.15	590.86
GIRDER F	597.23	597.06	596.88	596.70	596.49	596.28	596.05	595.80	595.54	595.26	594.96	594.66	594.35	594.03	593.71	593.39	593.08	592.79	592.51	592.24	591.96	591.69	591.41	591.12
GIRDER G	597.46	597.28	597.10	596.91	596.70	596.48	596.25	596.01	595.75	595.47	595.19	594.89	594.59	594.27	593.95	593.63	593.33	593.04	592.76	592.48	592.21	591.93	591.65	591.35

TABLE OF BEAM LINE HAUNCH ELEVATIONS

									℄ BRG. ABUT. 23C
LOCATION	25	26	27	28	29	30	31	32	33
GIRDER A	589.53	589.20	588.86	588.50	588.13	587.75	587.35	586.94	586.53
GIRDER B	589.82	589.49	589.15	588.79	588.41	588.01	587.61	587.19	586.75
GIRDER C	590.06	589.73	589.40	589.04	588.66	588.26	587.86	587.44	587.01
GIRDER D	590.30	589.97	589.64	589.28	588.90	588.52	588.11	587.70	587.27
GIRDER E	590.56	590.24	589.90	589.55	589.18	588.79	588.38	587.96	587.54
GIRDER F	590.82	590.50	590.16	589.81	589.44	589.05	588.65	588.23	587.81
GIRDER G	591.05	590.72	590.38	590.03	589.66	589.28	588.89	588.48	588.07

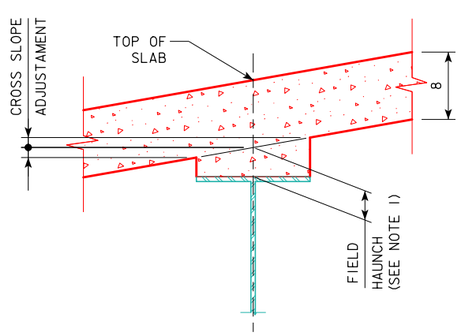

HAUNCH DETAIL

NOTE 1:

TO CALCULATE FIELD HAUNCH NEEDED AT EACH LOCATION, SURVEY THE BEAM TOPS CONSISTENT WITH THE SPACINGS SHOWN ON THE "HAUNCH LOCATIONS" DIAGRAM. SUBTRACT THE SURVEYED BEAM SHOT FROM THE "BEAM LINE HAUNCH ELEVATION" THIS VALUE WILL BE THE HAUNCH NEEDED (SEE "FIELD HAUNCH" IN HAUNCH DETAIL). THE "BEAM LINE HAUNCH ELEVATION" INCLUDES ADJUSTMENTS FOR SLAB THICKNESSES AND ANTICIPATED DEFLECTIONS. NO ADDITIONAL CALCULATIONS ARE REQUIRED. IF THE FIELD HAUNCH EXCEEDS THE MAXIMUMS AND MINIMUMS, SHOWN IN INCHES AND DECIMALS OF FEET IN THE MISCELLANEOUS DATA TABLE, ADJUSTMENTS TO THE GRADE OR ADDITIONAL HAUNCH REINFORCEMENT WILL BE REQUIRED.

NOTE:

BRIDGE SEAT ELEVATIONS ARE SET BASED ON THEORETICAL CAMBER AND BEAM DEFLECTIONS. THESE BRIDGE SEATS WILL PROVIDE A THEORETICAL BEAM HAUNCH WITHIN DESIGN PARAMETERS. FIELD HAUNCHES ARE DETERMINED USING SURVEYED TOP OF BEAM ELEVATIONS AND "BEAM LINE HAUNCH ELEVATION" DATA. ALLOWABLE MAXIMUM AND MINIMUM "FIELD HAUNCH" VALUES ARE GIVEN IN INCHES AND DECIMALS OF FEET IN THE "MISCELLANEOUS DATA" TABLE. "CROSS SLOPE ADJUSTMENT" VALUES WILL AID THE CONTRACTOR IN DETERMINING ACTUAL FORMED HAUNCH DIMENSIONS AT THE EDGES OF THE TOP FLANGE.

NOTE:
HAUNCH LOCATIONS ARE AT THE SAME LOCATIONS AS THE ENCIRCLED NUMBERS SHOWN ON DESIGN SHEET 38.

DESIGN FOR VARIABLE SKEW (L.A.)

278'-8 x 40' CONTINUOUS WELDED GIRDER BRIDGE W/14' BIKE TRAIL

139'-4 END SPAN 139'-4 INTERIOR SPANS

BEAM LINE HAUNCH ELEVATIONS

STA. 3589+46.06, BASELINE U.S. 67 RAMP C TBD

SCOTT COUNTY

IOWA DEPARTMENT OF TRANSPORTATION - HIGHWAY DIVISION

DESIGN SHEET NO. 36 OF 64 FILE NO. 30253 DESIGN NO. 3608

benesch engineers · scientists · planners
Alfred Benesch & Company
205 North Michigan Avenue, Suite 2400
Chicago, Illinois 60601
312-565-0450 Job No. 10061

2:25:37 PM untitled c:\pwise_work\do_not_delete\dms05641\82074200.brg
MODEL: $MODEL

MISCELLANEOUS DATA TABLE

	GIRDER	℄ BRG. PIER 21												℄ BOLT. SPL. #1				℄ PIER 22C				℄ BOLT. SPL. #2			
		1	2	3	4	5	6	7	8	9	10	11	12	13	14	15	16	17	18	19	20	21	22	23	24
ANTICIPATED DEFLECTION DUE TO SLAB (IN.)	A	0	$\frac{1}{2}$	$\frac{15}{16}$	$1\frac{3}{8}$	$1\frac{11}{16}$	$1\frac{15}{16}$	2	$2\frac{1}{16}$	2	$1\frac{13}{16}$	$1\frac{9}{16}$	$1\frac{5}{16}$	$\frac{15}{16}$	$\frac{5}{8}$	$\frac{5}{16}$	$\frac{1}{8}$	0	$\frac{1}{8}$	$\frac{3}{8}$	$\frac{11}{16}$	$1\frac{1}{16}$	$1\frac{3}{8}$	$1\frac{3}{4}$	$1\frac{15}{16}$
	B	0	$\frac{5}{8}$	$1\frac{1}{4}$	$1\frac{3}{4}$	$2\frac{3}{16}$	$2\frac{1}{2}$	$2\frac{5}{8}$	$2\frac{5}{8}$	$2\frac{9}{16}$	$2\frac{1}{4}$	$1\frac{15}{16}$	$1\frac{9}{16}$	$1\frac{1}{8}$	$\frac{11}{16}$	$\frac{3}{8}$	$\frac{1}{8}$	0	$\frac{3}{16}$	$\frac{7}{16}$	$\frac{13}{16}$	$1\frac{1}{4}$	$1\frac{11}{16}$	$2\frac{1}{8}$	$2\frac{1}{2}$
	C	0	$\frac{5}{8}$	$1\frac{1}{4}$	$1\frac{3}{4}$	$2\frac{3}{16}$	$2\frac{1}{2}$	$2\frac{5}{8}$	$2\frac{5}{8}$	$2\frac{9}{16}$	$2\frac{1}{4}$	$1\frac{15}{16}$	$1\frac{9}{16}$	$1\frac{1}{8}$	$\frac{11}{16}$	$\frac{3}{8}$	$\frac{1}{8}$	0	$\frac{3}{16}$	$\frac{7}{16}$	$\frac{13}{16}$	$1\frac{1}{4}$	$1\frac{11}{16}$	$2\frac{1}{8}$	$2\frac{1}{2}$
	D	0	$\frac{5}{8}$	$1\frac{1}{4}$	$1\frac{3}{4}$	$2\frac{3}{16}$	$2\frac{1}{2}$	$2\frac{5}{8}$	$2\frac{5}{8}$	$2\frac{9}{16}$	$2\frac{1}{4}$	$1\frac{15}{16}$	$1\frac{9}{16}$	$1\frac{1}{8}$	$\frac{11}{16}$	$\frac{3}{8}$	$\frac{1}{8}$	0	$\frac{3}{16}$	$\frac{7}{16}$	$\frac{13}{16}$	$1\frac{1}{4}$	$1\frac{11}{16}$	$2\frac{1}{8}$	$2\frac{1}{2}$
	E	0	$\frac{5}{8}$	$1\frac{1}{4}$	$1\frac{3}{4}$	$2\frac{3}{16}$	$2\frac{1}{2}$	$2\frac{5}{8}$	$2\frac{5}{8}$	$2\frac{9}{16}$	$2\frac{1}{4}$	$1\frac{15}{16}$	$1\frac{9}{16}$	$1\frac{1}{8}$	$\frac{11}{16}$	$\frac{3}{8}$	$\frac{1}{8}$	0	$\frac{3}{16}$	$\frac{7}{16}$	$\frac{13}{16}$	$1\frac{1}{4}$	$1\frac{11}{16}$	$2\frac{1}{8}$	$2\frac{1}{2}$
	F	0	$\frac{5}{8}$	$1\frac{1}{4}$	$1\frac{3}{4}$	$2\frac{3}{16}$	$2\frac{1}{2}$	$2\frac{5}{8}$	$2\frac{5}{8}$	$2\frac{9}{16}$	$2\frac{1}{4}$	$1\frac{15}{16}$	$1\frac{9}{16}$	$1\frac{1}{8}$	$\frac{11}{16}$	$\frac{3}{8}$	$\frac{1}{8}$	0	$\frac{3}{16}$	$\frac{7}{16}$	$\frac{13}{16}$	$1\frac{1}{4}$	$1\frac{11}{16}$	$2\frac{1}{8}$	$2\frac{1}{2}$
	G	0	$\frac{1}{2}$	$\frac{15}{16}$	$1\frac{3}{8}$	$1\frac{5}{8}$	$1\frac{7}{8}$	2	$2\frac{1}{16}$	2	$1\frac{13}{16}$	$1\frac{9}{16}$	$1\frac{5}{16}$	$\frac{15}{16}$	$\frac{5}{8}$	$\frac{5}{16}$	$\frac{1}{8}$	0	$\frac{1}{8}$	$\frac{3}{8}$	$\frac{11}{16}$	$1\frac{1}{16}$	$1\frac{3}{8}$	$1\frac{3}{4}$	$1\frac{15}{16}$
CROSS SLOPE ADJUSTMENTS (IN.)	ALL	$\frac{3}{16}$												$\frac{3}{16}$									$\frac{3}{16}$		
ALLOWABLE FIELD HAUNCH (IN. & FT.)	MAX. ALL	$2\frac{13}{16}$ (0.234)												$1\frac{5}{16}$ (0.109)									$2\frac{13}{16}$ (0.234)		
	MIN. ALL	$-\frac{5}{16}$ (-0.026)												$-\frac{5}{16}$ (-0.026)									$-\frac{5}{16}$ (-0.026)		

MISCELLANEOUS DATA TABLE

	GIRDER									℄ BRG. ABUT. 23C
		25	26	27	28	29	30	31	32	33
ANTICIPATED DEFLECTION DUE TO SLAB (IN.)	A	$2\frac{3}{16}$	$2\frac{3}{16}$	$2\frac{3}{16}$	$2\frac{1}{16}$	$1\frac{3}{4}$	$1\frac{7}{16}$	1	$\frac{1}{2}$	0
	B	$2\frac{3}{4}$	$2\frac{7}{8}$	$2\frac{13}{16}$	$2\frac{11}{16}$	$2\frac{3}{8}$	$1\frac{15}{16}$	$1\frac{5}{16}$	$\frac{11}{16}$	0
	C	$2\frac{3}{4}$	$2\frac{7}{8}$	$2\frac{13}{16}$	$2\frac{11}{16}$	$2\frac{3}{8}$	$1\frac{15}{16}$	$1\frac{5}{16}$	$\frac{11}{16}$	0
	D	$2\frac{3}{4}$	$2\frac{7}{8}$	$2\frac{13}{16}$	$2\frac{11}{16}$	$2\frac{3}{8}$	$1\frac{15}{16}$	$1\frac{5}{16}$	$\frac{11}{16}$	0
	E	$2\frac{3}{4}$	$2\frac{7}{8}$	$2\frac{13}{16}$	$2\frac{11}{16}$	$2\frac{3}{8}$	$1\frac{15}{16}$	$1\frac{5}{16}$	$\frac{11}{16}$	0
	F	$2\frac{3}{4}$	$2\frac{7}{8}$	$2\frac{13}{16}$	$2\frac{11}{16}$	$2\frac{3}{8}$	$1\frac{15}{16}$	$1\frac{5}{16}$	$\frac{11}{16}$	0
	G	$2\frac{3}{16}$	$2\frac{3}{16}$	$2\frac{3}{16}$	$2\frac{1}{16}$	$1\frac{3}{4}$	$1\frac{7}{16}$	1	$\frac{1}{2}$	0
CROSS SLOPE ADJUSTMENTS (IN.)	ALL	$\frac{3}{16}$								
ALLOWABLE FIELD HAUNCH (IN. & FT.)	MAX. ALL	$2\frac{13}{16}$ (0.234)								
	MIN. ALL	$-\frac{5}{16}$ (-0.026)								

DESIGN FOR VARIABLE SKEW (L.A.)

278'-8 × 40' CONTINUOUS WELDED GIRDER BRIDGE W/14' BIKE TRAIL

139'-4 END SPAN 139'-4 INTERIOR SPANS

MISCELLANEOUS DATA TABLE

STA. 3589+46.06, BASELINE U.S. 67 RAMP C TBD

SCOTT COUNTY

IOWA DEPARTMENT OF TRANSPORTATION - HIGHWAY DIVISION

DESIGN SHEET NO. 37 OF 64 FILE NO. 30253 DESIGN NO. 3608

benesch engineers · scientists · planners
Alfred Benesch & Company
205 North Michigan Avenue, Suite 2400
Chicago, Illinois 60601
312-565-0450 Job No. 10061

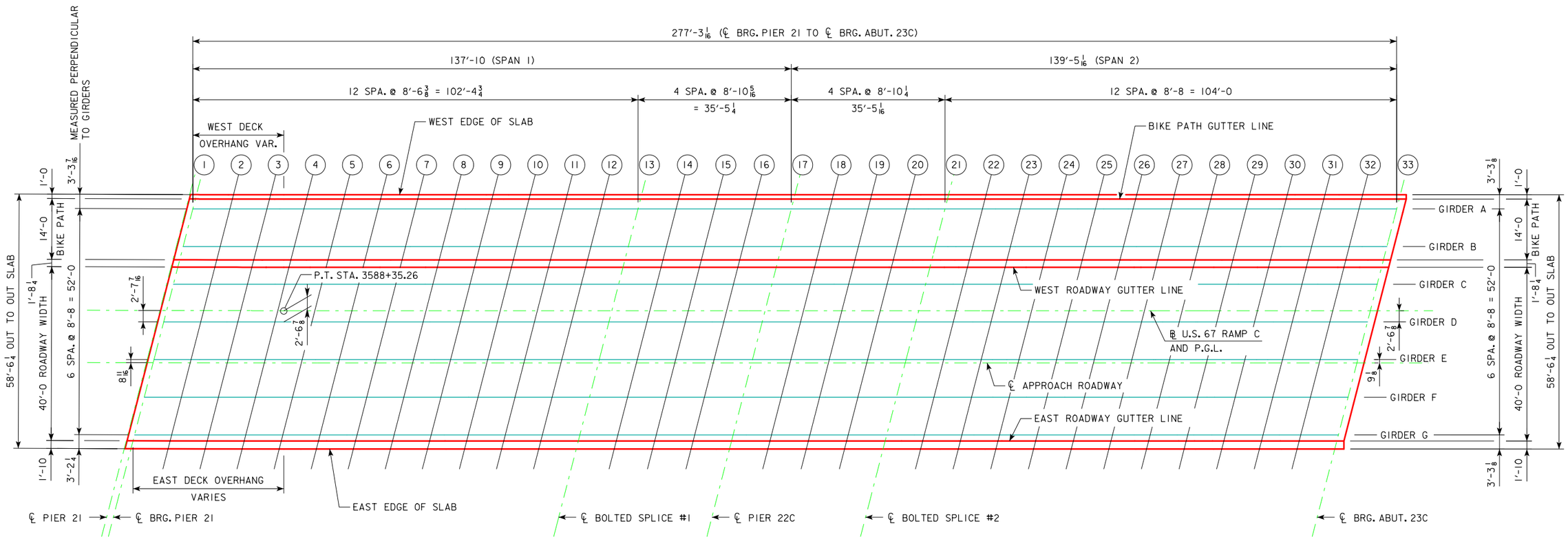

SLAB AND BEAM LINE HAUNCH ELEVATION LAYOUT

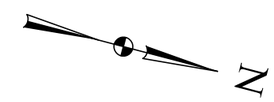

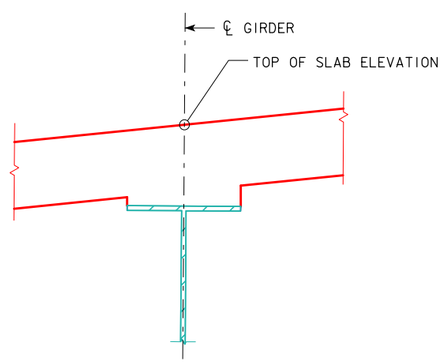

HAUNCH DETAIL

NOTES:

ALL LONGITUDINAL DIMENSIONS ARE MEASURED ALONG ℄ GIRDERS AND ACCOUNT FOR THE VERTICAL COMPONENT DUE TO CHANGE IN ELEVATION IN ADDITION TO THE HORIZONTAL COMPONENT MEASURED IN PLAN.

TRANSVERSE DIMENSIONS ARE MEASURED PERPENDICULAR TO THE BASELINE AND EDGES OF DECK.

DESIGN FOR VARIABLE SKEW (L.A.)

278'-8 × 40' CONTINUOUS WELDED GIRDER BRIDGE W/14' BIKE TRAIL

139'-4 END SPAN 139'-4 INTERIOR SPANS

SLAB ELEVATIONS

STA. 3589+46.06, BASELINE U.S. 67 RAMP C TBD

SCOTT COUNTY

IOWA DEPARTMENT OF TRANSPORTATION - HIGHWAY DIVISION

DESIGN SHEET NO. 38 OF 64 FILE NO. 30253 DESIGN NO. 3608

benesch engineers · scientists · planners
Alfred Benesch & Company
205 North Michigan Avenue, Suite 2400
Chicago, Illinois 60601
312-565-0450 Job No. 10061

TABLE OF SLAB ELEVATIONS

	℄ BRG. PIER 21												℄ BOLT. SPL. #1				℄ PIER 22C				℄ BOLT. SPL. #2			
LOCATION	1	2	3	4	5	6	7	8	9	10	11	12	13	14	15	16	17	18	19	20	21	22	23	24
W. EDGE SLAB	596.73	596.50	596.26	596.02	595.78	595.53	595.28	595.02	594.76	594.50	594.23	593.96	593.68	593.39	593.09	592.79	592.49	592.18	591.87	591.55	591.23	590.91	590.59	590.26
BIKE PATH GUTTER LINE	596.74	596.51	596.27	596.03	595.79	595.54	595.29	595.03	594.77	594.51	594.24	593.97	593.69	593.40	593.10	592.80	592.50	592.19	591.88	591.56	591.24	590.92	590.60	590.27
GIRDER A	596.79	596.56	596.32	596.08	595.84	595.59	595.34	595.08	594.82	594.56	594.29	594.02	593.74	593.45	593.16	592.86	592.55	592.25	591.93	591.62	591.30	590.98	590.66	590.33
GIRDER B	596.98	596.75	596.51	596.27	596.03	595.79	595.53	595.28	595.02	594.76	594.49	594.22	593.94	593.66	593.36	593.06	592.76	592.45	592.14	591.83	591.51	591.19	590.87	590.54
W. RDWY. GUTTER LINE	597.09	596.86	596.63	596.39	596.15	595.90	595.65	595.40	595.14	594.88	594.61	594.34	594.06	593.78	593.48	593.18	592.88	592.58	592.27	591.95	591.63	591.32	591.00	590.67
GIRDER C	597.20	596.97	596.73	596.50	596.25	596.01	595.76	595.50	595.25	594.98	594.72	594.45	594.17	593.89	593.59	593.30	593.00	592.69	592.38	592.07	591.75	591.43	591.11	590.79
GIRDER D	597.43	597.20	596.97	596.73	596.49	596.25	596.00	595.74	595.49	595.23	594.96	594.69	594.42	594.13	593.84	593.55	593.25	592.94	592.63	592.32	592.00	591.69	591.37	591.04
GIRDER E	597.66	597.43	597.20	596.97	596.73	596.48	596.24	595.98	595.73	595.47	595.21	594.94	594.67	594.38	594.09	593.79	593.49	593.19	592.88	592.57	592.26	591.94	591.62	591.30
℄ APPROACH ROADWAY	597.68	597.45	597.22	596.99	596.75	596.50	596.26	596.01	595.75	595.49	595.23	594.96	594.69	594.40	594.11	593.82	593.52	593.21	592.91	592.59	592.28	591.96	591.65	591.32
GIRDER F	597.89	597.67	597.44	597.20	596.96	596.72	596.47	596.22	595.97	595.71	595.45	595.18	594.91	594.63	594.34	594.04	593.74	593.44	593.14	592.83	592.51	592.20	591.88	591.56
GIRDER G	598.12	597.90	597.67	597.44	597.20	596.96	596.71	596.46	596.21	595.95	595.69	595.42	595.15	594.87	594.58	594.29	593.99	593.69	593.39	593.08	592.76	592.45	592.13	591.81
E. RDWY. GUTTER LINE	598.16	597.94	597.71	597.47	597.24	597.00	596.75	596.50	596.25	595.99	595.73	595.46	595.20	594.91	594.62	594.33	594.03	593.73	593.43	593.12	592.81	592.49	592.18	591.86
E. EDGE SLAB	598.34	598.11	597.89	597.65	597.42	597.18	596.93	596.68	596.43	596.17	595.91	595.65	595.38	595.09	594.81	594.51	594.22	593.92	593.61	593.30	592.99	592.68	592.36	592.04

TABLE OF SLAB ELEVATIONS

									℄ BRG. ABUT. 23C
LOCATION	25	26	27	28	29	30	31	32	33
W. EDGE SLAB	589.93	589.60	589.26	588.91	588.56	588.21	587.85	587.49	587.13
BIKE PATH GUTTER LINE	589.94	589.61	589.27	588.92	588.57	588.22	587.86	587.50	587.14
GIRDER A	590.00	589.66	589.32	588.98	588.63	588.28	587.92	587.56	587.20
GIRDER B	590.21	589.88	589.54	589.20	588.85	588.50	588.14	587.78	587.42
W. RDWY. GUTTER LINE	590.34	590.01	589.67	589.33	588.98	588.63	588.27	587.92	587.55
GIRDER C	590.46	590.12	589.79	589.44	589.10	588.75	588.39	588.04	587.67
GIRDER D	590.72	590.38	590.05	589.71	589.36	589.01	588.66	588.30	587.94
GIRDER E	590.97	590.64	590.31	589.97	589.62	589.28	588.92	588.57	588.21
℄ APPROACH ROADWAY	591.00	590.67	590.33	589.99	589.65	589.30	588.95	588.59	588.23
GIRDER F	591.23	590.90	590.57	590.23	589.89	589.54	589.19	588.83	588.47
GIRDER G	591.49	591.16	590.83	590.49	590.15	589.80	589.45	589.10	588.74
E. RDWY. GUTTER LINE	591.53	591.20	590.87	590.53	590.19	589.85	589.50	589.14	588.78
E. EDGE SLAB	591.72	591.39	591.05	590.72	590.38	590.03	589.68	589.33	588.97

NOTE:

FOR LOCATIONS OF TOP OF SLAB ELEVATIONS, REFER TO DIAGRAM ON DESIGN SHEET 38.

DESIGN FOR VARIABLE SKEW (L.A.)

278'-8 x 40' CONTINUOUS WELDED GIRDER BRIDGE W/14' BIKE TRAIL

139'-4 END SPAN 139'-4 INTERIOR SPANS

SLAB ELEVATIONS

STA. 3589+46.06, BASELINE U.S. 67 RAMP C TBD

SCOTT COUNTY

IOWA DEPARTMENT OF TRANSPORTATION - HIGHWAY DIVISION

DESIGN SHEET NO. 39 OF 64 FILE NO. 30253 DESIGN NO. 3608

benesch engineers · scientists · planners
Alfred Benesch & Company
205 North Michigan Avenue, Suite 2400
Chicago, Illinois 60601
312-565-0450 Job No. 10061

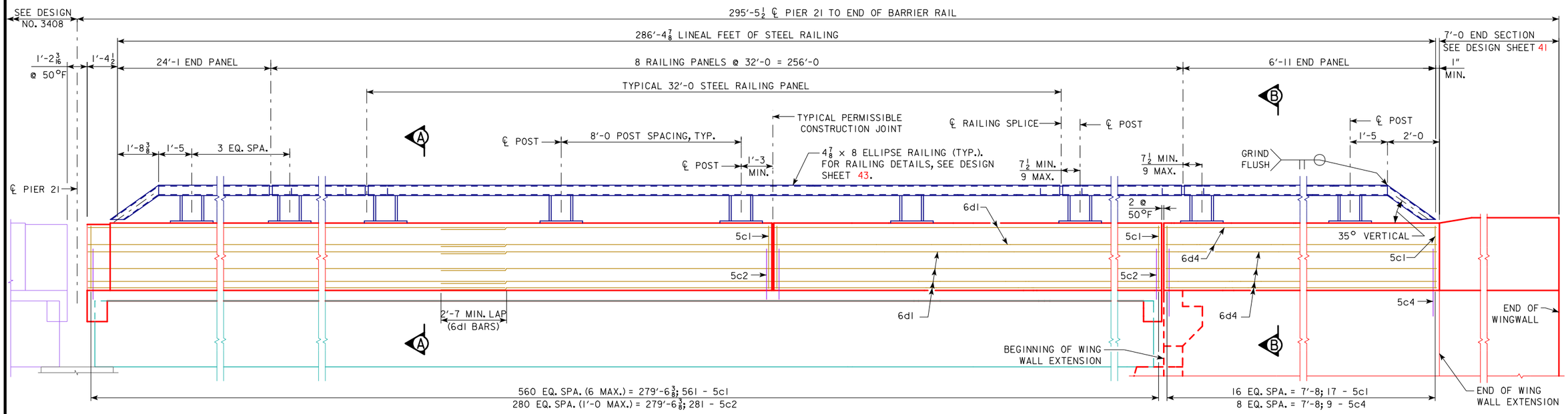

EAST BARRIER RAIL ELEVATION

LOOKING WEST

(MASKWALL AND BARRIER COVER PLATE NOT SHOWN FOR CLARITY)

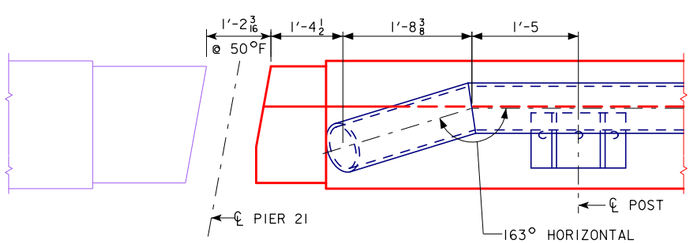

EAST BARRIER RAIL PART PLAN AT PIER 21

(BARRIER COVER PLATE NOT SHOWN FOR CLARITY)

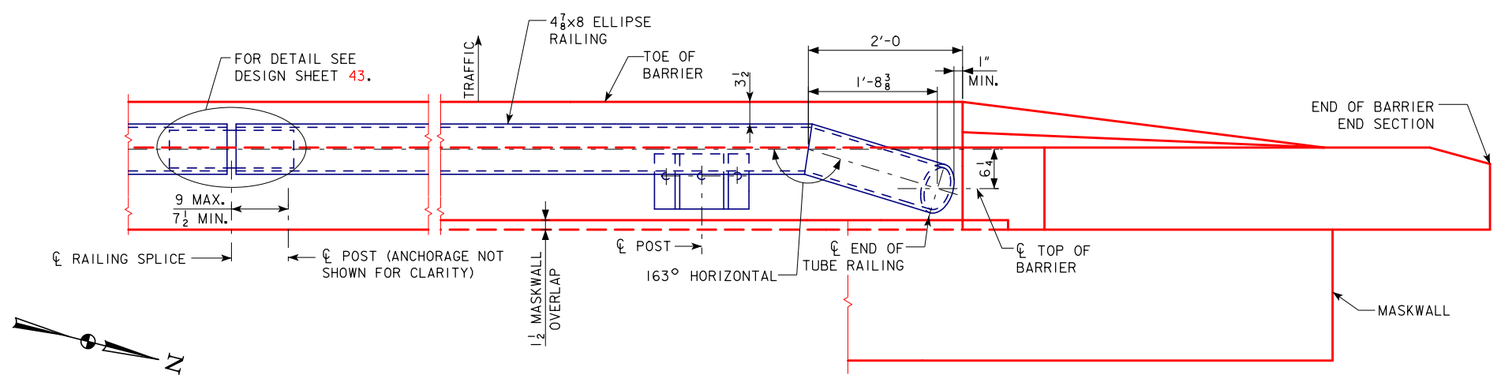

EAST BARRIER RAIL PART PLAN AT ABUT. 23C

NOTES:

SEE DESIGN SHEET 45 FOR DETAILS OF SECTIONS A-A & B-B, JOINT DETAILS, BAR LIST AND NOTES.

CLEAR DISTANCE FROM FACE OF CONCRETE TO NEAR REINFORCING BAR SHALL BE 2 INCHES UNLESS OTHERWISE NOTED OR SHOWN.

DESIGN FOR VARIABLE SKEW (L.A.)

278'-8 × 40' CONTINUOUS WELDED GIRDER BRIDGE W/14' BIKE TRAIL

139'-4 END SPAN 139'-4 INTERIOR SPANS

EAST TRAFFIC BARRIER DETAILS

STA. 3589+46.06, BASELINE U.S. 67 RAMP C TBD

SCOTT COUNTY

IOWA DEPARTMENT OF TRANSPORTATION - HIGHWAY DIVISION

DESIGN SHEET NO. 40 OF 64 FILE NO. 30253 DESIGN NO. 3608

benesch engineers · scientists · planners
Alfred Benesch & Company
205 North Michigan Avenue, Suite 2400
Chicago, Illinois 60601
312-565-0450 Job No. 10061

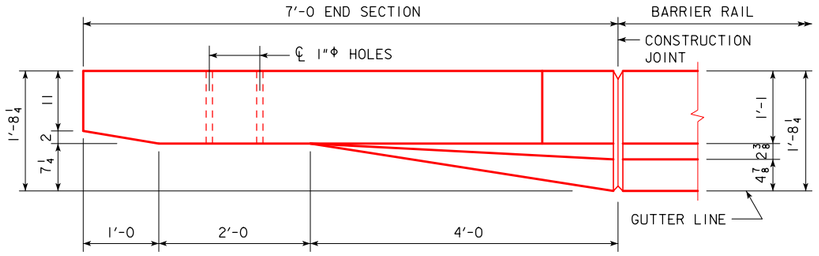

PART PLAN VIEW

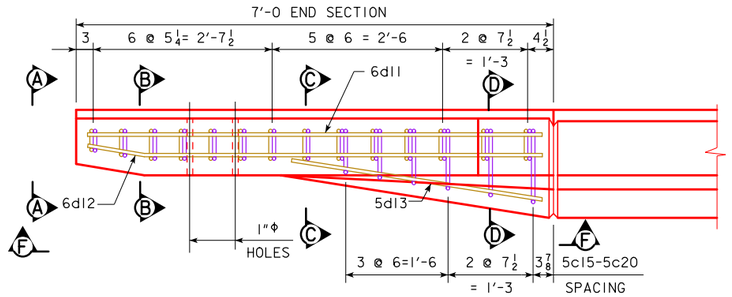

PART VIEW E-E

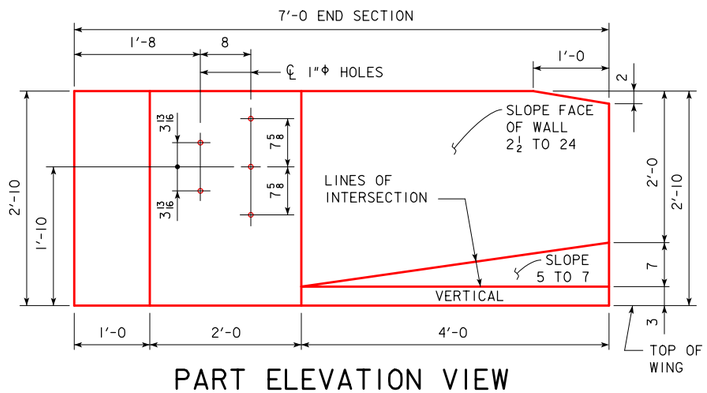

PART ELEVATION VIEW

PROVIDE 5 HOLES FORMED WITH 1"Φ PLASTIC CONDUIT. COST TO BE INCLUDED IN PRICE BID FOR CONCRETE BARRIER RAILING.

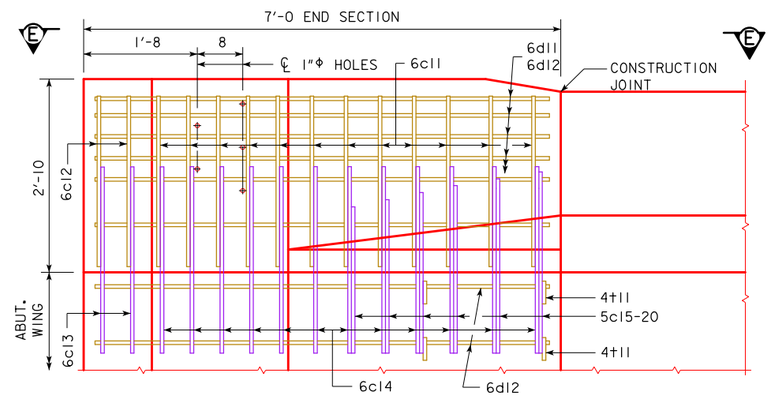

PART VIEW F-F

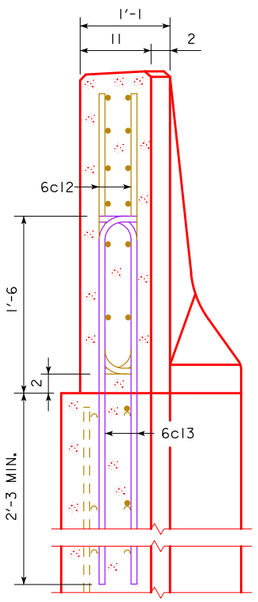

VIEW A-A

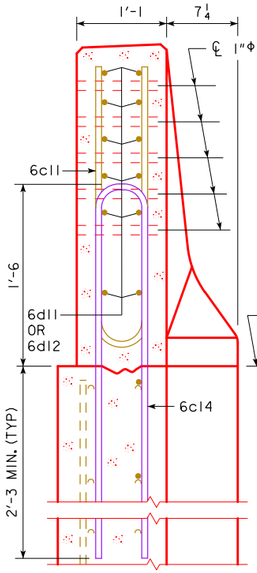

SECTION B-B

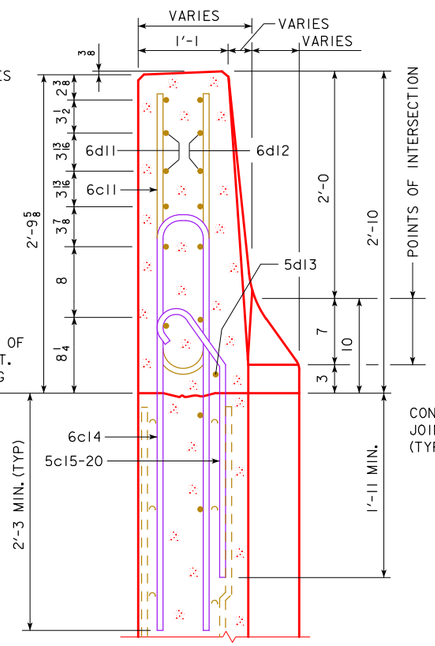

SECTION C-C

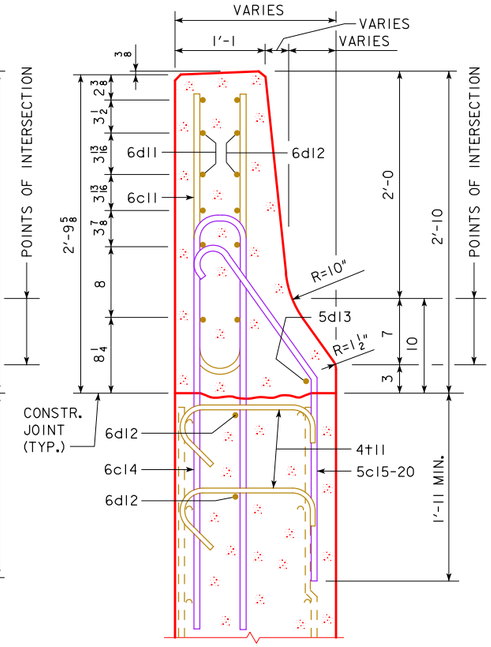

SECTION D-D

NOTE:
4†11 PLACEMENT- 2 BARS EACH LEVEL OF 6d12 IN WING FOOTING.

NOTE:
CONSTRUCTION JOINT BETWEEN TOP OF WING AND BARRIER RAIL IS ROUGHENED CONCRETE.

NOTE:
THE 10" RADIUS AND 1½" RADIUS ARE TYPICAL AND SHALL BE USED WHEN CONSTRUCTING THE CORNERS FOR VIEW A-A, SECTION B-B, SECTION C-C AND SECTION D-D.

NOTE:
THE 6c14, 6c13, 5c15-20, 2 - 6d12 AND 4†11 BARS ARE TO BE PLACED WITH THE ABUTMENT WING. THE DETAILS FOR PLACEMENT ARE SHOWN ON THE WING ABUTMENT SHEET.

NOTE:
DASHED LINES BELOW THE TOP OF WING ARE THE ABUTMENT WING REINFORCING STEEL. SEE WING ABUTMENT SHEET FOR PLACEMENT.

NOTE:
DESIGNATION "-C" SIGNIFIES BAR ASSOCIATED WITH THE RAMP C BRIDGE. "-C" NOT SHOWN IN DETAILS FOR CLARITY.

EPOXY REINFORCING STEEL - ONE END SECTION

BAR	LOCATION	SHAPE	NO.	LENGTH	WEIGHT
6c11-C	VERTICAL		12	5'-6	99
6c12-C	VERTICAL		4	2'-10	17
6d11-C	HORIZONTAL		6	6'-8	60
6d12-C	HORIZONTAL		8	6'-9	81
5d13-C	HORIZONTAL		1	3'-9	4
4†11-C	ABUTMENT WING TIE BARS		4	VARIES	5
(INCLUDE WITH BARRIER RAIL REINFORCING)			TOTAL WEIGHT (LBS.)		266

STAINLESS STEEL - ONE END SECTION

BAR	LOCATION	SHAPE	NO.	LENGTH	WEIGHT
6c13-C	VERTICAL		4	4'-1	25
6c14-C	VERTICAL		12	8'-0	144
5c15-20-C	VERTICAL		6	VARIES	23
(INCLUDE WITH BARRIER RAIL REINFORCING)			TOTAL WEIGHT (LBS.)		192

CONCRETE PLACEMENT SUMMARY

SECTION	TOTAL
BARRIER RAIL ONE END SECTION	0.65 CU. YD.

BENT BAR DETAILS

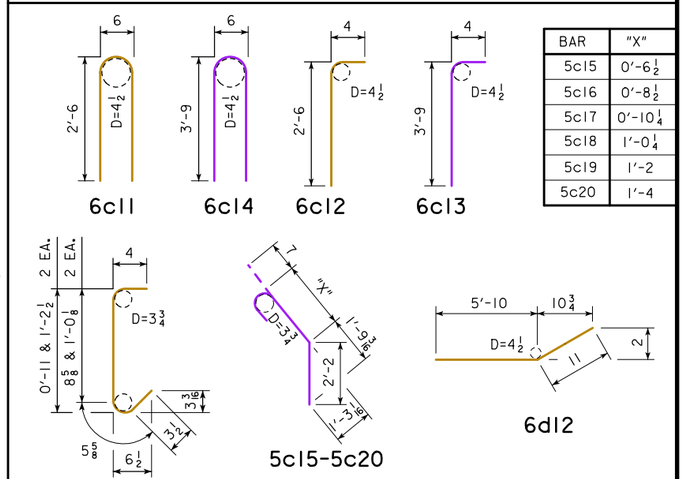

BAR	"X"
5c15	0'-6½
5c16	0'-8½
5c17	0'-10¼
5c18	1'-0¼
5c19	1'-2
5c20	1'-4

DESIGN FOR VARIABLE SKEW (L.A.)

278'-8 x 40' CONTINUOUS WELDED GIRDER BRIDGE W/14' BIKE TRAIL

139'-4 END SPAN — 139'-4 INTERIOR SPANS

EAST BARRIER END SECTION

STA. 3589+46.06, BASELINE U.S. 67 RAMP C — TBD

SCOTT COUNTY

IOWA DEPARTMENT OF TRANSPORTATION - HIGHWAY DIVISION

DESIGN SHEET NO. 41 OF 64 FILE NO. 30253 DESIGN NO. 3608

benesch engineers · scientists · planners
Alfred Benesch & Company
205 North Michigan Avenue, Suite 2400
Chicago, Illinois 60601
312-565-0450 Job No. 10061

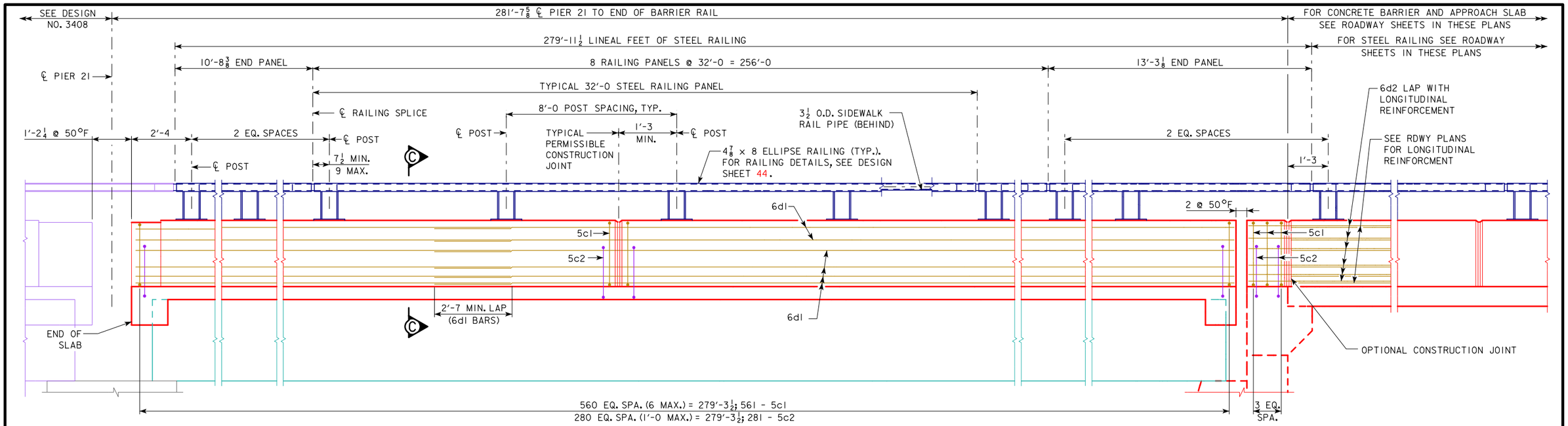

TRAFFIC AND BICYCLE BARRIER RAIL ELEVATION

LOOKING WEST - POINTS OF INTERSECTION
NOT SHOWN FOR CLARITY
(BARRIER COVER PLATE NOT SHOWN)

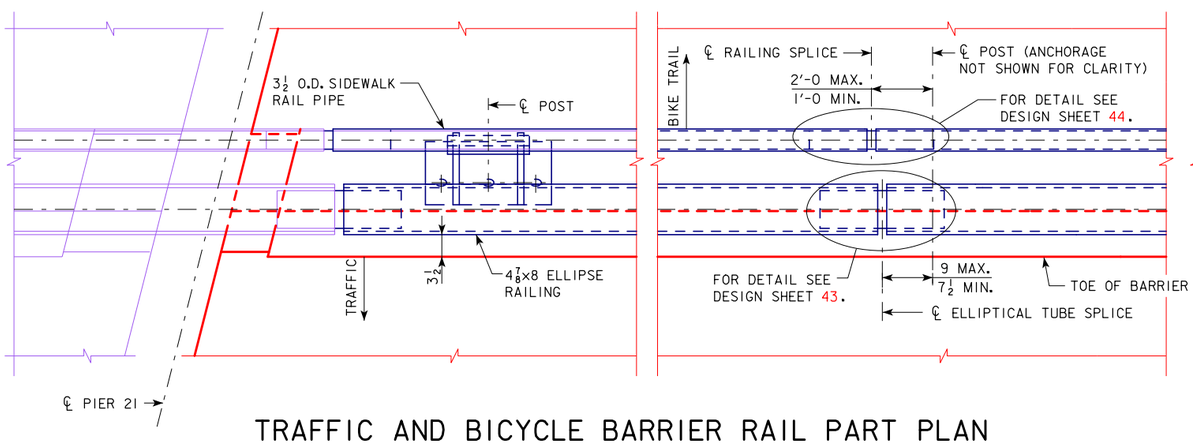

TRAFFIC AND BICYCLE BARRIER RAIL PART PLAN

(BARRIER COVER PLATE NOT SHOWN)

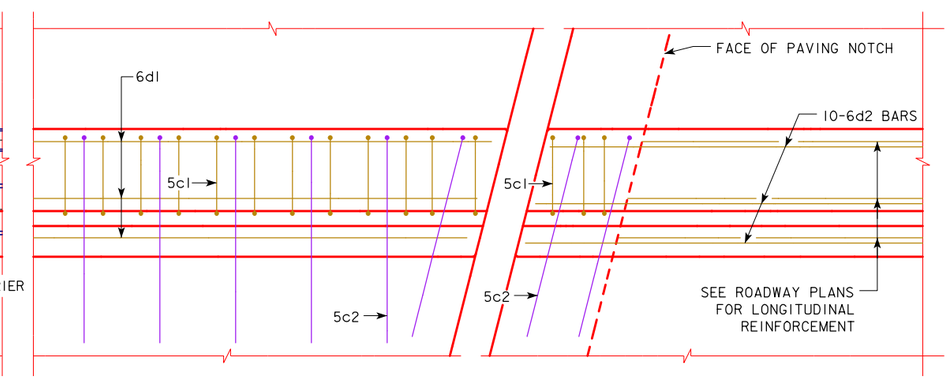

PART PLAN CONCRETE BARRIER RAIL

NOTES:

SEE DESIGN SHEET 45 FOR DETAILS OF SECTION C-C, JOINT DETAILS, BAR LIST AND NOTES.

CLEAR DISTANCE FROM FACE OF CONCRETE TO NEAR REINFORCING BAR SHALL BE 2 INCHES UNLESS OTHERWISE NOTED OR SHOWN.

DESIGN FOR VARIABLE SKEW (L.A.)

278'-8 × 40' CONTINUOUS WELDED GIRDER BRIDGE W/14' BIKE TRAIL

139'-4 END SPAN 139'-4 INTERIOR SPANS

TRAFFIC & BICYCLE BARRIER DTLS.

STA. 3589+46.06, BASELINE U.S. 67 RAMP C TBD

SCOTT COUNTY

IOWA DEPARTMENT OF TRANSPORTATION - HIGHWAY DIVISION

DESIGN SHEET NO. 42 OF 64 FILE NO. 30253 DESIGN NO. 3608

benesch engineers · scientists · planners
Alfred Benesch & Company
205 North Michigan Avenue, Suite 2400
Chicago, Illinois 60601
312-565-0450 Job No. 10061

2:26:16 PM untitled c:\pwise_work\do_not_delete\dms05641\82074200.brg
MODEL: $MODEL

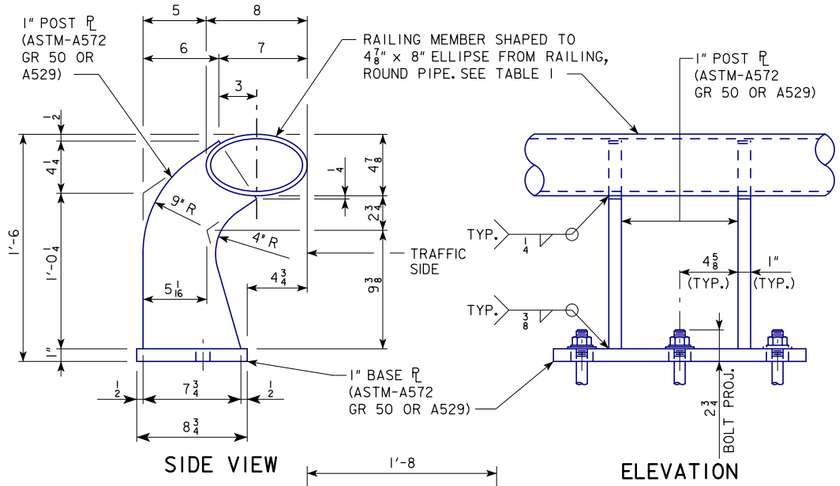

SIDE VIEW

ELEVATION

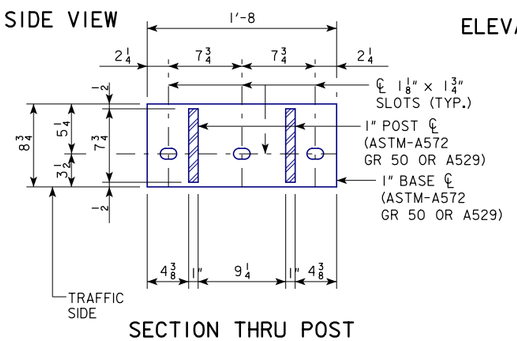

SECTION THRU POST

ELLIPTICAL TUBE WITH RAILING POST AND ANCHORAGE DETAILS

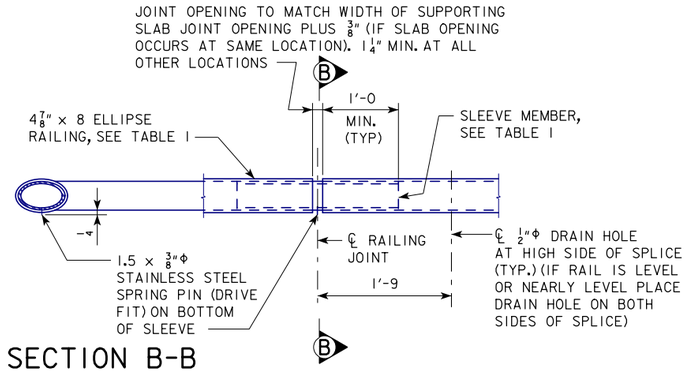

SECTION B-B

ELLIPSE RAILING SPLICE

NOTE:
THE MAJOR AND MINOR DIAMETERS OF THE RAILING MEMBER MAY VARY +/- 0.1875 INCHES FROM PLAN DIMENSIONS. HOWEVER, THE DIFFERENCE BETWEEN THE OUTSIDE DIAMETERS OF THE SLEEVE AND THE INSIDE DIAMETERS OF THE RAILING SHALL NOT EXCEED 0.125 INCHES ALONG THE MAJOR OR MINOR AXIS. THE MAXIMUM GAP ALONG THE 45° AXIS OF THE SLEEVE MAY BE 1/4" MAX.

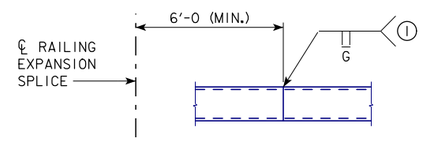

RAILING SHOP SPLICE DETAIL

(1) ONE SHOP SPLICE PER PANEL IS PERMITTED WITH MINIMUM 85 PERCENT PENETRATION. THE WELD MAY BE SQUARE GROOVE, DOUBLE VEE GROOVE, OR SINGLE GROOVE. GRIND SMOOTH.

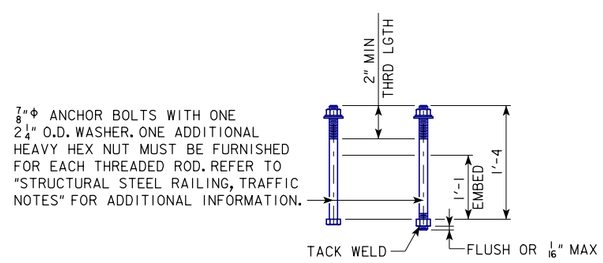

CAST-IN-PLACE ANCHOR BOLT OPTIONS

STRUCTURAL STEEL RAILING, TRAFFIC NOTES:

STRUCTURAL STEEL BARRIER JOINTS ARE TO BE LOCATED AS SHOWN.

THE STRUCTURAL STEEL RAILING IS TO BE BID ON A PER LINEAR FOOT BASIS MEASURED FROM END TO END OF STEEL RAILING.

THE NUMBER OF LINEAR FOOT OF STRUCTURAL STEEL RAILING INSTALLED WILL BE PAID FOR AT THE CONTRACT UNIT PRICE PER FOOT BASED ON PLAN QUANTITIES.

PRICE BID FOR "STRUCTURAL STEEL RAILING, TRAFFIC" SHALL BE FULL COMPENSATION FOR FURNISHING ALL MATERIAL, AND ALL EQUIPMENT AND LABOR REQUIRED TO ERECT THE RAILING IN ACCORDANCE WITH THESE PLANS AND CURRENT SPECIFICATIONS.

ALL RAILINGS, POSTS, SLEEVES, BASE PLATES, AND SHIMS SHALL BE GALVANIZED AFTER FABRICATION IN ACCORDANCE WITH THE REQUIREMENTS OF ASTM A123.

OPTIONAL CAST-IN-PLACE ANCHOR BOLTS TO COMPLY WITH ASTM F1554 GRADE 105. HEX NUTS TO COMPLY WITH ASTM A563 GRADE DH. WASHERS TO COMPLY WITH ASTM F436. GALVANIZING IN ACCORDANCE WITH ASTM F2329.

ANCHOR BOLTS SHALL BE 7/8" DIA., A193 GR. B7, BE FULLY THREADED WITH HEAVY HEX NUTS AND ONE HARDENED WASHER AND ONE 2 1/4" O.D. WASHER EACH. EMBED THREADED RODS 10 1/2" MIN. INTO CONCRETE PARAPET. ANCHOR BOLTS, NUTS, AND WASHERS SHALL BE GALVANIZED IN ACCORDANCE WITH ASTM F2329. ADHESIVE BONDING MATERIAL SYSTEM SHALL BE IN ACCORDANCE WITH MATERIALS I.M. 491.11. INSTALLED ANCHORS SHALL BE CAPABLE OF OBTAINING AN ULTIMATE LOAD PER THREADED ROD OF 36 KIPS IN TENSION FOR THE SPACING AND EDGE DISTANCE SHOWN IN THE PLANS. INSTALL AND FIELD TEST ANCHORS IN ACCORDANCE WITH THE DEVELOPMENTAL SPECIFICATION, "INSTALLING ADHESIVE-BONDED ANCHORS AND DOWELS FOR TRAFFIC RAILINGS".

TESTING NOTE FOR TUBE STEEL:

THE RESULTS OF THE FOLLOWING TEST SHALL BE SUBMITTED AS A CERTIFIED TEST REPORT TO THE CENTRAL MATERIALS OFFICE IN AMES ALONG WITH A CERTIFIED MILL TEST REPORT. IN ADDITION, A 1 FOOT LONG TUBE SAMPLE FROM THE FABRICATING SHOP SHALL ALSO BE SUBMITTED TO THE CENTRAL MATERIALS OFFICE IN AMES FOR VERIFICATION TESTING.

TESTING IS NOT REQUIRED FOR HOT ROLLED TUBE STEEL CONFORMING TO ASTM A501.

ALL COLD FORMED TUBE STEEL SHALL BE TESTED IN ACCORDANCE WITH THE REQUIREMENTS OF ASTM E436 - "DROP-WEIGHT TEAR TESTS OF FERRITIC STEELS", EXCEPT WITH THE FOLLOWING MODIFICATIONS:

ALL TESTS SHALL BE PERFORMED BY THE PRODUCING MILL PRIOR TO FABRICATION. MATERIAL SAMPLES SHALL BE GALVANIZED IN ACCORDANCE WITH ASTM A123 PRIOR TO TESTING.

THE TESTING SHALL BE CONDUCTED AT A TEMPERATURE OF 0 DEGREES FAHRENHEIT ON A 3" x 1'-0 SPECIMEN.

IF THE AVERAGE PERCENT SHEAR AREA FALLS BELOW 50 PERCENT THE MATERIAL REPRESENTED BY THESE TESTS SHALL BE REJECTED.

ALL MATERIALS SHALL BE ACCEPTED ON THE BASIS OF COMPLYING TEST RESULTS AND CERTIFIED MILL TEST REPORT.

TO FACILITATE ACCEPTANCE AND REJECTION OF MATERIAL, THE MANUFACTURER OF THE STRUCTURAL STEEL SHAPE SHALL IDENTIFY THE PRODUCT WITH THE STEEL HEAT NUMBER THAT IS TRACEABLE AT THE TIME OF ACCEPTANCE. THE HEAT NUMBER SHALL BE PLACED AT INTERVALS NOT TO EXCEED 4'-0.

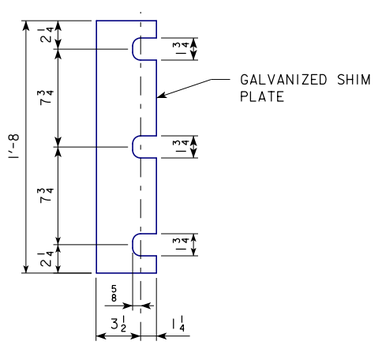

SHIM PLATE DETAIL

NOTE:
PROVIDE 2-1/16" GALVANIZED STEEL SHIMS FOR EACH RAIL POST, TO BE USED AS REQUIRED.

TABLE 1

APPROVED RAILING MATERIAL		
4 7/8 x 8 ELLIPSE RAILING	SLEEVE MEMBER (AT RAILING SPLICE)	
MATERIAL	MATERIAL	THICKNESS
6" DIA. STD. PIPE ASTM-A53 E OR S GRADE B	ASTM-A53-B	0.353"
	A36 OR A500 GR. B	0.339"
	API-5LX52	0.224"
6" DIA., 0.280" WALL THICKNESS ASTM-A501	ASTM-A53-B	0.353"
	A36 OR A500 GR. B	0.339"
	API-5LX52	0.224"
6 5/8" O.D. x 0.188" TUBE API-5LX52	ASTM-A53-B	0.339"
	A36 OR A500 GR. B	0.325"
	API-5LX52	0.216"

DESIGN FOR VARIABLE SKEW (L.A.)

278'-8 x 40' CONTINUOUS WELDED GIRDER BRIDGE W/14' BIKE TRAIL

139'-4 END SPAN 139'-4 INTERIOR SPANS

TRAFFIC RAILING DETAILS

STA. 3589+46.06, BASELINE U.S. 67 RAMP C TBD

SCOTT COUNTY

IOWA DEPARTMENT OF TRANSPORTATION - HIGHWAY DIVISION

DESIGN SHEET NO. 43 OF 64 FILE NO. 30253 DESIGN NO. 3608

benesch engineers · scientists · planners
Alfred Benesch & Company
205 North Michigan Avenue, Suite 2400
Chicago, Illinois 60601
312-565-0450 Job No. 10061

2:26:25 PM untitled c:\pwise_work\do_not_delete\dms05641\82074200.brg
MODEL: $MODEL

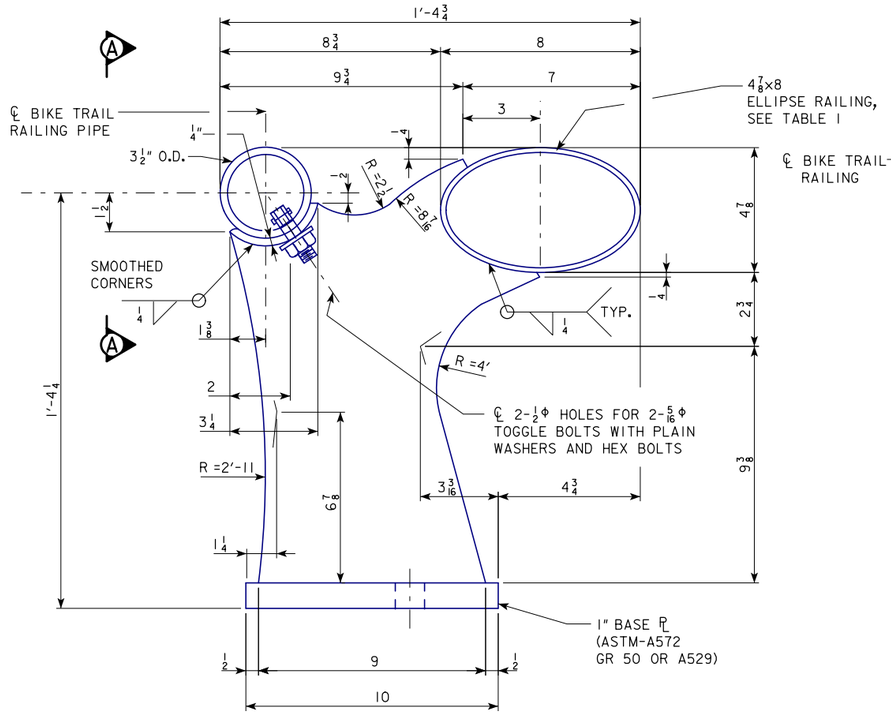

ELEVATION-RAISED TRAFFIC AND BICYCLE RAILING POST

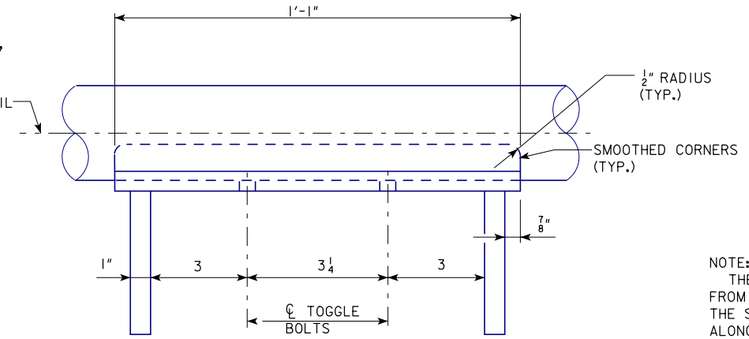

SECTION A-A

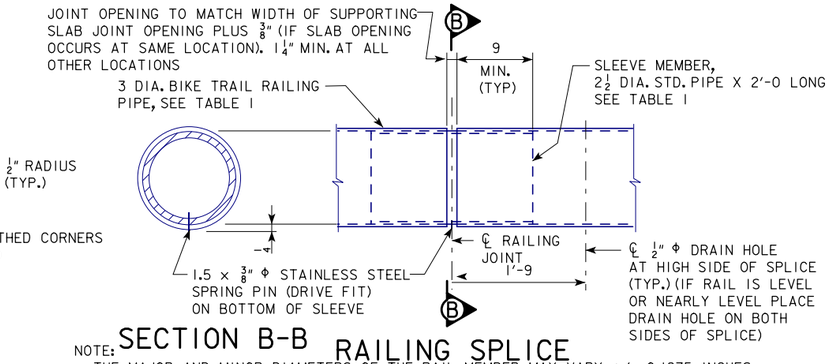

SECTION B-B RAILING SPLICE

NOTE: THE MAJOR AND MINOR DIAMETERS OF THE RAIL MEMBER MAY VARY +/- 0.1875 INCHES FROM PLAN DIMENSIONS. HOWEVER, THE DIFFERENCE BETWEEN THE OUTSIDE DIAMETERS OF THE SLEEVE AND THE INSIDE DIAMETERS OF THE RAIL SHALL NOT EXCEED 0.125 INCHES ALONG THE MAJOR OR MINOR AXIS. THE MAXIMUM GAP ALONG THE 45° AXIS OF THE SLEEVE MAY BE 1/4" MAX.

TESTING NOTE FOR TUBE STEEL:

THE RESULTS OF THE FOLLOWING TEST SHALL BE SUBMITTED AS A CERTIFIED TEST REPORT TO THE CENTRAL MATERIALS OFFICE IN AMES ALONG WITH A CERTIFIED MILL TEST REPORT. IN ADDITION, A 1 FOOT LONG TUBE SAMPLE FROM THE FABRICATING SHOP SHALL ALSO BE SUBMITTED TO THE CENTRAL MATERIALS OFFICE IN AMES FOR VERIFICATION TESTING.

TESTING IS NOT REQUIRED FOR HOT ROLLED TUBE STEEL CONFORMING TO ASTM A501.

ALL COLD FORMED TUBE STEEL SHALL BE TESTED IN ACCORDANCE WITH THE REQUIREMENTS OF ASTM E436 - "DROP-WEIGHT TEAR TESTS OF FERRITIC STEELS", EXCEPT WITH THE FOLLOWING MODIFICATIONS:

ALL TESTS SHALL BE PERFORMED BY THE PRODUCING MILL PRIOR TO FABRICATION. MATERIAL SAMPLES SHALL BE GALVANIZED IN ACCORDANCE WITH ASTM A123 PRIOR TO TESTING.

THE TESTING SHALL BE CONDUCTED AT A TEMPERATURE OF 0 DEGREES FAHRENHEIT ON A 3" x 1'-0 SPECIMEN.

IF THE AVERAGE PERCENT SHEAR AREA FALLS BELOW 50 PERCENT THE MATERIAL REPRESENTED BY THESE TESTS SHALL BE REJECTED.

ALL MATERIALS SHALL BE ACCEPTED ON THE BASIS OF COMPLYING TEST RESULTS AND CERTIFIED MILL TEST REPORT.

TO FACILITATE ACCEPTANCE AND REJECTION OF MATERIAL, THE MANUFACTURER OF THE STRUCTURAL STEEL SHAPE SHALL IDENTIFY THE PRODUCT WITH THE STEEL HEAT NUMBER THAT IS TRACEABLE AT THE TIME OF ACCEPTANCE. THE HEAT NUMBER SHALL BE PLACED AT INTERVALS NOT TO EXCEED 4'-0.

TESTING OF STEEL BIKE TRAIL RAILING PIPE IS NOT REQUIRED.

TABLE I

APPROVED RAILING MATERIAL		
4 7/8 x 8 ELLIPSE RAILING	SLEEVE MEMBER (AT RAILING SPLICE)	
MATERIAL	MATERIAL	THICKNESS
6" DIA. STD. PIPE ASTM-A53 E OR S GRADE B	ASTM-A53-B	0.353"
	A36 OR A500 GR. B	0.339"
	API-5LX52	0.224"
6" DIA., 0.280" WALL THICKNESS ASTM-A501	ASTM-A53-B	0.353"
	A36 OR A500 GR. B	0.339"
	API-5LX52	0.224"
6 5/8" O.D. x 0.188" TUBE API-5LX52	ASTM-A53-B	0.339"
	A36 OR A500 GR. B	0.325"
	API-5LX52	0.216"
3 1/2 DIA. BIKE TRAIL RAILING PIPE	SLEEVE MEMBER (AT RAILING SPLICE)	
MATERIAL	MATERIAL	
3 " DIA. STD. PIPE ASTM-A53 E OR S GRADE B	2 1/2" DIA. STD. PIPE ASTM-A53 E OR S GRADE B	

STRUCTURAL STEEL RAILING, TRAFFIC & BICYCLE NOTES:

STRUCTURAL STEEL BARRIER JOINTS ARE TO BE LOCATED AS SHOWN.

THE STRUCTURAL STEEL RAILING IS TO BE BID ON A PER LINEAR FOOT BASIS MEASURED FROM END TO END OF STEEL RAILING.

THE NUMBER OF LINEAR FOOT OF STRUCTURAL STEEL RAILING INSTALLED WILL BE PAID FOR AT THE CONTRACT UNIT PRICE PER FOOT BASED ON PLAN QUANTITIES.

PRICE BID FOR "STRUCTURAL STEEL RAILING, TRAFFIC & BICYCLE" SHALL BE FULL COMPENSATION FOR FURNISHING ALL MATERIAL, AND ALL THE EQUIPMENT AND LABOR REQUIRED TO ERECT THE RAILING IN ACCORDANCE WITH THESE PLANS AND CURRENT SPECIFICATIONS.

ALL RAILINGS, POSTS, SLEEVES, BASE PLATES, AND SHIMS SHALL BE GALVANIZED AFTER FABRICATION IN ACCORDANCE WITH THE REQUIREMENTS OF ASTM A123.

OPTIONAL CAST-IN-PLACE ANCHOR BOLTS TO COMPLY WITH ASTM F1554 GRADE 105. HEX NUTS TO COMPLY WITH ASTM A563 GRADE DH. WASHERS TO COMPLY WITH ASTM F436. GALVANIZING IN ACCORDANCE WITH ASTM F2329.

ANCHOR BOLTS SHALL BE 7/8" DIA., A193 GR. B7, BE FULLY THREADED WITH HEAVY HEX NUTS AND ONE HARDENED WASHER AND ONE 2 1/4" O.D. WASHER EACH. EMBED THREADED RODS 10 1/2" MIN. INTO CONCRETE PARAPET. ANCHOR BOLTS, NUTS, AND WASHERS SHALL BE GALVANIZED IN ACCORDANCE WITH ASTM F2329. ADHESIVE BONDING MATERIAL SYSTEM SHALL BE IN ACCORDANCE WITH MATERIALS I.M. 491.11. INSTALLED ANCHORS SHALL BE CAPABLE OF OBTAINING AN ULTIMATE LOAD PER THREADED ROD OF 36 KIPS IN TENSION FOR THE SPACING AND EDGE DISTANCE SHOWN IN THE PLANS. INSTALL AND FIELD TEST ANCHORS IN ACCORDANCE WITH THE DEVELOPMENTAL SPECIFICATION, "INSTALLING ADHESIVE-BONDED ANCHORS AND DOWELS FOR TRAFFIC RAILINGS".

TOGGLE BOLTS SHALL BE A TYPE OF STUD AND/OR SCREW STYLE CAPABLE OF SUPPORTING A 1,000 POUND LOAD IN TENSION WHEN TESTED THROUGH A 1/2" ROUND HOLE. TOGGLE BOLTS SHALL BE GALVANIZED IN ACCORDANCE WITH ASTM F2329. TOGGLE BOLTS MAY BE CADMIUM-PLATED TO MEET THE REQUIREMENTS OF ASTM B766 "ELECTRODEPOSITED COATINGS OF CADMIUM" IN PLACE OF GALVANIZING.

THE TESTING OF THE TOGGLE BOLTS SHALL FOLLOW THE GUIDELINES SET FORTH IN ASTM A370 WITH THE FOLLOWING MODIFICATIONS. THE BOTTOM FIXTURE USED TO GRIP THE BOLT SHALL ALLOW THE END PIECES TO SPREAD PRIOR TO GRIPPING IT. THE FIXTURE AT THE TOP SHOULD ALLOW CENTERING OF THE BOLT ALLOWING THE BOLT TO PULLED AXIALLY. THE SPEED OF THE TEST SHOULD BE APPROXIMATELY 1/4" PER MINUTE. THE RESULTS OF THE TEST SHALL BE SUBMITTED AS A CERTIFIED TEST REPORT TO THE CENTRAL MATERIALS OFFICE IN AMES ALONG WITH A CERTIFIED MILL TEST REPORT. IN ADDITION, THREE SAMPLE TOGGLE BOLTS SHALL ALSO BE SUBMITTED TO THE CENTRAL MATERIALS OFFICE IN AMES FOR VERIFICATION TESTING. THE SAMPLES SHALL HAVE THE SAME HEAT NUMBER AS THE TOGGLE BOLTS SUPPLIED.

SEE DESIGN SHEET 43 FOR ELLIPSE RAILING SPLICE, RAILING SHOP SPLICE AND CAST IN PLACE ANCHOR BOLT OPTIONS DETAILS.

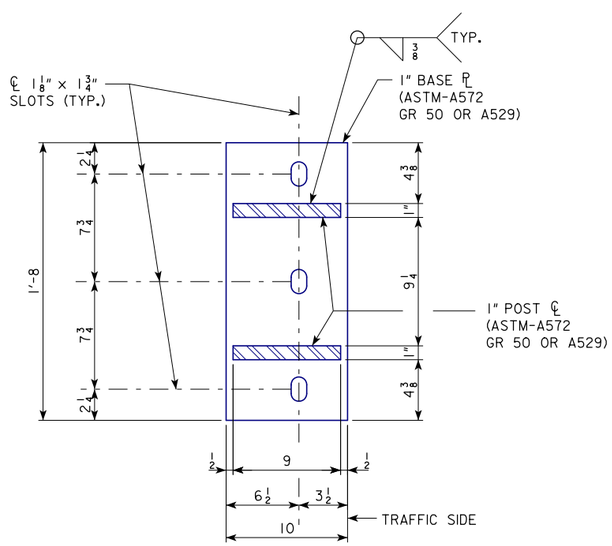

BASE PLATE DETAIL

DESIGN FOR VARIABLE SKEW (L.A.)

278'-8 x 40' CONTINUOUS WELDED GIRDER BRIDGE W/14' BIKE TRAIL

139'-4 END SPAN 139'-4 INTERIOR SPANS

TRAFFIC AND BICYCLE RAILING

STA. 3589+46.06, BASELINE U.S. 67 RAMP C TBD

SCOTT COUNTY

IOWA DEPARTMENT OF TRANSPORTATION - HIGHWAY DIVISION

DESIGN SHEET NO. 44 OF 64 FILE NO. 30253 DESIGN NO. 3608

benesch engineers · scientists · planners
Alfred Benesch & Company
205 North Michigan Avenue, Suite 2400
Chicago, Illinois 60601
312-565-0450 Job No. 10061

2:26:31 PM untitled c:\pwise_work\do_not_delete\dms05641\82074200.brg
MODEL: $MODEL

BARRIER RAILING NOTES:

THE CONCRETE BARRIER RAILING IS TO BE BID ON A LINEAL FOOT BASIS MEASURED FROM END TO END OF RAILING. THE NUMBER OF LINEAL FEET OF BARRIER RAILING INSTALLED WILL BE PAID FOR AT THE CONTRACT PRICE PER LINEAL FOOT BASED ON PLAN QUANTITIES. PRICE BID FOR "CONCRETE BARRIER RAILING" SHALL BE FULL COMPENSATION FOR FURNISHING ALL MATERIAL, EXCLUDING REINFORCING STEEL, AND ALL OF THE EQUIPMENT AND LABOR REQUIRED TO ERECT THE RAILING IN ACCORDANCE WITH THESE PLANS AND CURRENT SPECIFICATIONS.

IF CONDUIT IS REQUIRED IN THIS PLAN THE RIGID STEEL CONDUIT, JUNCTION BOXES AND FITTINGS INCLUDING LABOR AND ANY ADDITIONAL WORKTO DO THE INSTALLATION IS CONSIDERED INCIDENTALTO THE COST OF THE RAILING.

THE PERMISSIBLE CONSTRUCTION JOINTS ARE TO BE PLACED BETWEEN VERTICAL BARS AT A MINIMUM SPACING OF 20 FEET. CONSTRUCTION JOINT CONTACT SURFACES ARE TO BE COATED WITH AN APPROVED BOND BREAKER. COST OF THE JOINT SEALER AND BOND BREAKER SHALL BE CONSIDERED INCIDENTAL TO OTHER CONSTRUCTION.

CONCRETE BARRIER RAILINGS PLACED USING THE SLIPFORM METHOD WILL REQUIRE THE USE OF A CLASS BR CONCRETE IN ACCORDANCE WITH ARTICLE 2513.03, A, 2, OF THE STANDARD SPECIFICATIONS. CAST-IN-PLACE BARRIER RAILINGS SHALL USE HIGH PERFORMANCE CONCRETE. CLASS D CONCRETE IS NOT PERMITTED FOR CONCRETE BARRIER RAILINGS (CAST-IN-PLACE OR SLIPFORMED METHOD).

TOP OF THE BARRIER RAILING IS TO BE PARALLEL TO THE THEORETICAL GRADE.

CROSS SECTIONAL AREA OF THE CONCRETE BARRIER RAILING = 3.31 SQUARE FEET.

CROSS SECTIONAL AREA OF THE 2'-8 SECTION OF THE TRAFFIC AND BICYCLE BARRIER RAIL = 3.46 SQUARE FEET.

THIS BARRIER MEETS THE REQUIREMENTS OF TEST LEVEL 5 (TL-5).

PLACE POST AND POST ANCHOR BOLTS NORMAL TO GRADE AND RAILINGS PARALLEL TO GRADE.

SEE DESIGN SHEETS 54 AND 55 FOR BARRIER RAILING COVER PLATE DETAILS.

MINIMUM CLEAR DISTANCE FROM FACE OF CONCRETE TO NEAR REINFORCING BAR IS TO BE 2" UNLESS OTHERWISE NOTED OR SHOWN.

ON THE NON-TRAFFIC SIDE OF THE BARRIER RAILING, PLACE THE 5c1 BARS WITH A 3" CLEARANCE AND THE 5c2 BARS WITH A 1½" CLEARANCE TO PROVIDE ADEQUATE SPACE BETWEEN THE STEEL CONDUIT AND THE STAINLESS STEEL 5c2 AND 5c4 BARS TO MEET THE CONSTRUCTION REQUIREMENTS OF I.M. 452.

NOTE THAT SOME OF THE 6d1 AND 6d4 BARS ARE TO BE PLACED OUTSIDE OF THE 5c1 BARS, BETWEEN THE 5c1 BARS AND THE 5c2 AND 5c4 BARS, AS SHOWN IN THE DETAIL.

ALL BARRIER RAILING REINFORCING STEEL IS TO BE INCLUDED WITH THE SUPERSTRUCTURE REINFORCING STEEL.

THE STEEL CONDUIT SHALL BE SECURELY TIED AT EVERY 3'-0 INTERSECTION WITH THE 5c1 BARS TO AVOID CONTACT WITH THE STAINLESS STEEL 5c2 AND 5c4 BARS.

FOR RIGID STEEL CONDUIT DETAILS, SEE DESIGN SHEETS 51 & 52 .

THE JOINT SEALER SHALL BE LIGHT GRAY NONSAG LATEX CAULKING SEALER MARKETED FOR OUTDOOR USE. NO TESTING OR CERTIFICATION IS REQUIRED.

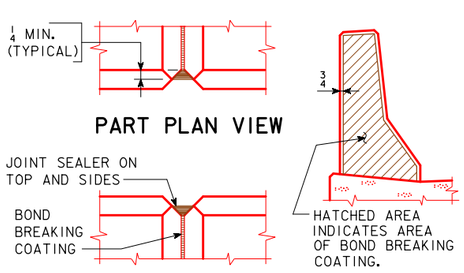

BARRIER RAIL JOINT DETAILS

BENT BAR DETAILS

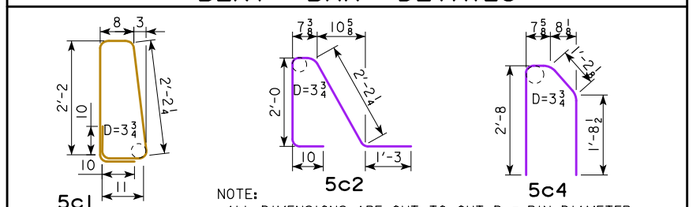

CONCRETE PLACEMENT SUMMARY

SECTION		TOTAL
2'-8 RAIL SECTION, EAST	288.5' @ 0.122 CU. YD. PER FT.	35.2
2'-8 RAIL SECTION, TRAFFIC & BICYCLE	281.6' @ 0.128 CU. YD. PER FT.	36.0
END SECTION	7.0' @ 0.093 CU. YD. PER FT.	0.7
	TOTAL (CU. YD.)	71.9

BARRIER RAILING QUANTITIES

ITEM	UNIT	QUANTITY
STRUCTURAL STEEL RAILING, TRAFFIC	L.F.	286.5
STRUCTURAL STEEL RAILING, TRAFFIC & BICYCLE	L.F.	280.0
CONCRETE BARRIER RAILING	L.F.	577.1

EPOXY REINF. STEEL-EAST TRAFFIC BARR.

SECTION	BAR	LOCATION	SHAPE	NO.	LENGTH	WEIGHT
RAMP C	5c1-C	VERTICAL		578	7'-8	4622
	6d1-C	LONGITUDINAL		80	37'-3	4476
	6d4-C	LONGITUDINAL		10	7'-6	113
(INCLUDE WITH SUPERSTRUCTURE REINFORCING)				TOTAL (LBS.)		9211

STAINLESS STEEL-EAST TRAFFIC BARRIER

SECTION	BAR	LOCATION	SHAPE	NO.	LENGTH	WEIGHT
RAMP C	5c2-C	VERTICAL		281	6'-11	2027
	5c4-C	VERTICAL		9	6'-3	59
(INCLUDE WITH SUPERSTRUCTURE REINFORCING)				TOTAL (LBS.)		2086

EPOXY REINF. STEEL-TRAFF. & BICYCLE BARR.

SECTION	BAR	LOCATION	SHAPE	NO.	LENGTH	WEIGHT
RAMP C	5c1-C	VERTICAL		564	7'-8	4510
	6d1-C	LONGITUDINAL		80	37'-3	4476
	6d2-C	LONGITUDINAL		10	3'-10	58
(INCLUDE WITH SUPERSTRUCTURE REINFORCING)				TOTAL (LBS.)		9043

STAINLESS STEEL-TRAFF. & BICYCLE BARR.

SECTION	BAR	LOCATION	SHAPE	NO.	LENGTH	WEIGHT
RAMP C	5c2-C	VERTICAL		283	6'-11	2042
(INCLUDE WITH SUPERSTRUCTURE REINFORCING)				TOTAL (LBS.)		2042

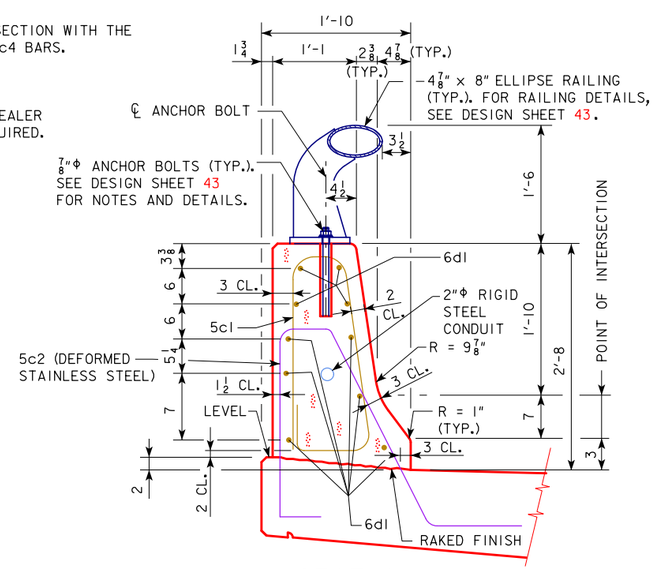

SECTION A-A
WITH TRAFFIC RAILING

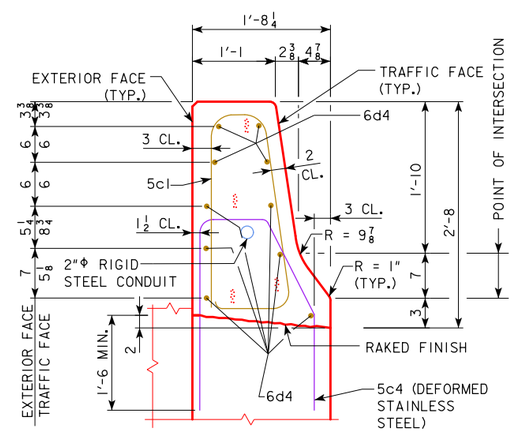

SECTION B-B
SHOWN WITHOUT TRAFFIC RAILING FOR CLARITY

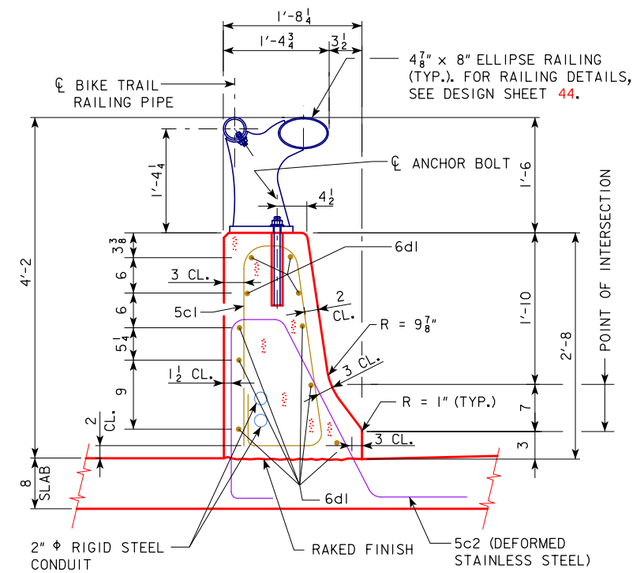

SECTION C-C
WITH TRAFFIC AND BICYCLE RAILING

NOTES:

DESIGNATION "-C" SIGNIFIES BAR ASSOCIATED WITH THE RAMP C BRIDGE. "-C" NOT SHOWN IN DETAILS FOR CLARITY.

WORK THIS SHEET WITH DESIGN SHEETS 40 THROUGH 44.

DESIGN FOR VARIABLE SKEW (L.A.)

278'-8 × 40' CONTINUOUS WELDED GIRDER BRIDGE W/14' BIKE TRAIL

139'-4 END SPAN — 139'-4 INTERIOR SPANS

2'-8 TRAFFIC BARRIER DETAILS

STA. 3589+46.06, BASELINE U.S. 67 RAMP C — TBD

SCOTT COUNTY

IOWA DEPARTMENT OF TRANSPORTATION - HIGHWAY DIVISION

DESIGN SHEET NO. 45 OF 64 FILE NO. 30253 DESIGN NO. 3608

benesch engineers · scientists · planners
Alfred Benesch & Company
205 North Michigan Avenue, Suite 2400
Chicago, Illinois 60601
312-565-0450 Job No. 10061

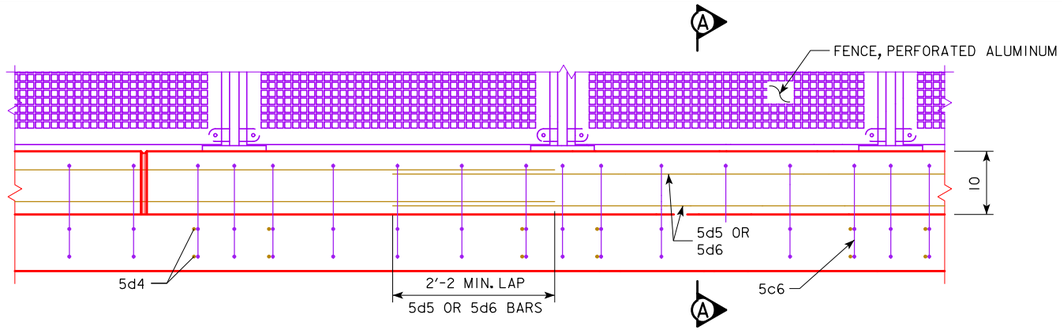

CONCRETE PARAPET ELEVATION

LOOKING WEST
(SLAB REINFORCING NOT SHOWN)

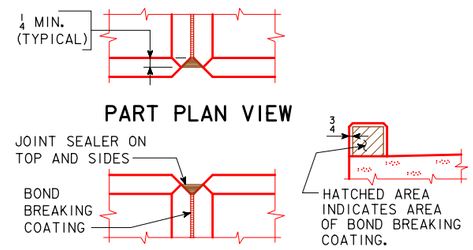

CONCRETE PARAPET JOINT DETAILS

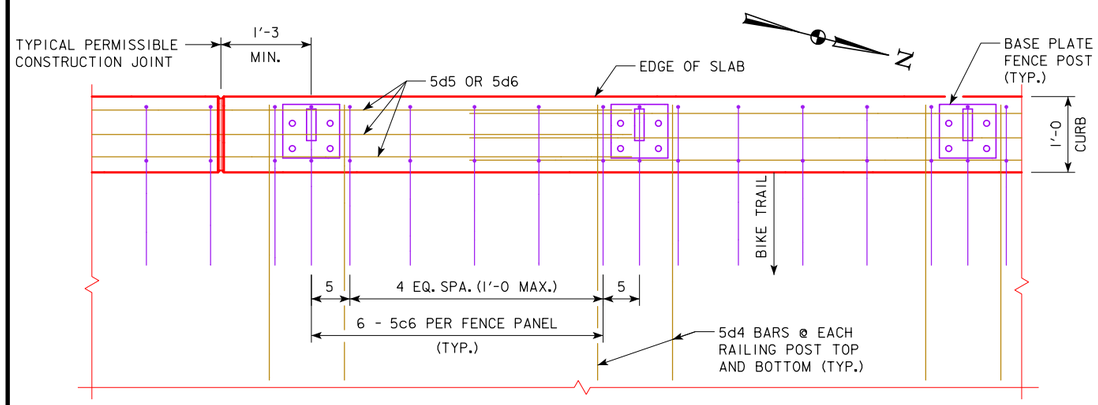

CONCRETE PARAPET PLAN

(SLAB REINFORCING NOT SHOWN)

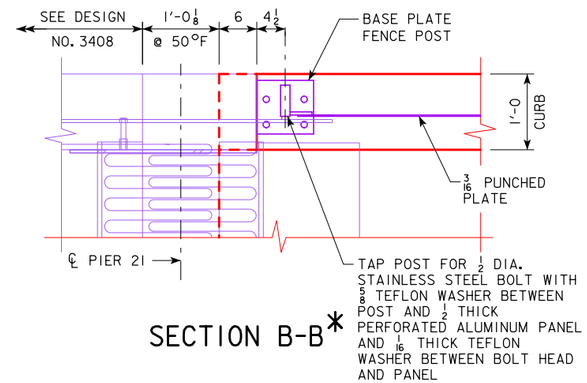

SECTION B-B*

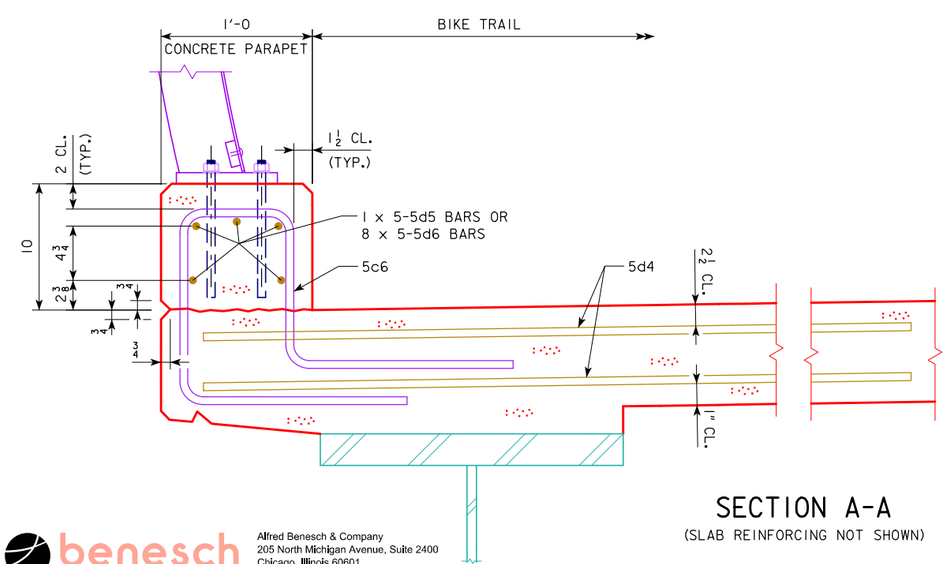

benesch
engineers · scientists · planners

Alfred Benesch & Company
205 North Michigan Avenue, Suite 2400
Chicago, Illinois 60601
312-565-0450 Job No. 10061

SECTION A-A

(SLAB REINFORCING NOT SHOWN)

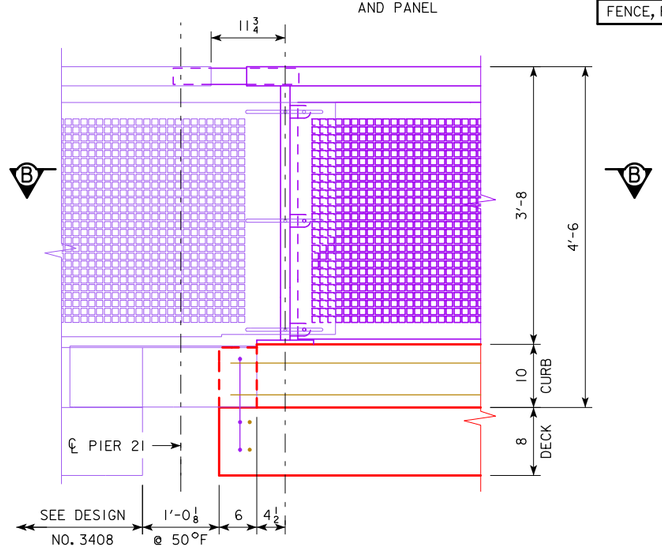

ELEVATION AT PIER 21*

EPOXY REINF. STEEL-CONCRETE PARAPET

SECTION	BAR	LOCATION	SHAPE	NO.	LENGTH	WEIGHT
RAMP C	5d4-C	TRANSVERSE	—	276	6'-6	1871
	5d5-C	LONGITUDINAL	—	5	16'-7	86
	5d6-C	LONGITUDINAL	—	40	36'-7	1526
(INCLUDE WITH SUPERSTRUCTURE REINFORCING)				TOTAL (LBS.)		3483

STAINLESS STEEL-CONCRETE PARAPET

SECTION	BAR	LOCATION	SHAPE	NO.	LENGTH	WEIGHT
RAMP C	5c6-C	VERTICAL		409	5'-9	2453
(INCLUDE WITH SUPERSTRUCTURE REINFORCING)				TOTAL (LBS.)		2453

BENT BAR DETAILS

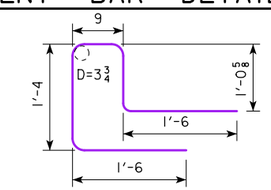

5c6

NOTE:
ALL DIMENSIONS ARE OUT TO OUT. D = PIN DIAMETER.

CONCRETE PLACEMENT SUMMARY

SECTION	TOTAL
0'-10 CONCRETE PARAPET SECTION 293.9 @ 0.031 CU.YD. PER FT.	9.1
CONCRETE SECTION AT PIER 21	0.1
TOTAL (CU. YD.)	9.2

FENCE QUANTITIES

ITEM	UNIT	QUANTITY
CONCRETE PARAPET, FENCE	L.F.	295.6
FENCE, PERFORATED ALUMINUM	L.F.	294.0

NOTES:

SEE DESIGN SHEETS 47 THRU 50 FOR PERFORATED ALUMINUM FENCE DETAILS.

CLEAR DISTANCE FROM FACE OF CONCRETE TO NEAR REINFORCING BAR SHALL BE 2 INCHES UNLESS OTHERWISE NOTED OR SHOWN.

CONCRETE BARRIER RAILINGS PLACED USING THE SLIPFORM METHOD WILL REQUIRE THE USE OF A CLASS BR CONCRETE IN ACCORDANCE WITH ARTICLE 2513.03, A, 2, OF THE STANDARD SPECIFICATIONS. CAST-IN-PLACE BARRIER RAILINGS SHALL USE HIGH PERFORMANCE CONCRETE. CLASS D CONCRETE IS NOT PERMITTED FOR CONCRETE BARRIER RAILINGS (CAST-IN-PLACE OR SLIPFORMED METHOD).

DESIGNATION "-C" SIGNIFIES BAR ASSOCIATED WITH THE RAMP C BRIDGE. "-C" NOT SHOWN IN DETAILS FOR CLARITY.

* SEE DESIGN NO. 3408 FOR COVER PLATE ANCHORAGE DETAILS.

DESIGN FOR VARIABLE SKEW (L.A.)

278'-8 x 40' CONTINUOUS WELDED GIRDER BRIDGE W/14' BIKE TRAIL

139'-4 END SPAN 139'-4 INTERIOR SPANS

PEDESTRIAN RAILING DETAILS

STA. 3589+46.06, BASELINE U.S. 67 RAMP C TBD

SCOTT COUNTY

IOWA DEPARTMENT OF TRANSPORTATION - HIGHWAY DIVISION

DESIGN SHEET NO. 46 OF 64 FILE NO. 30253 DESIGN NO. 3608

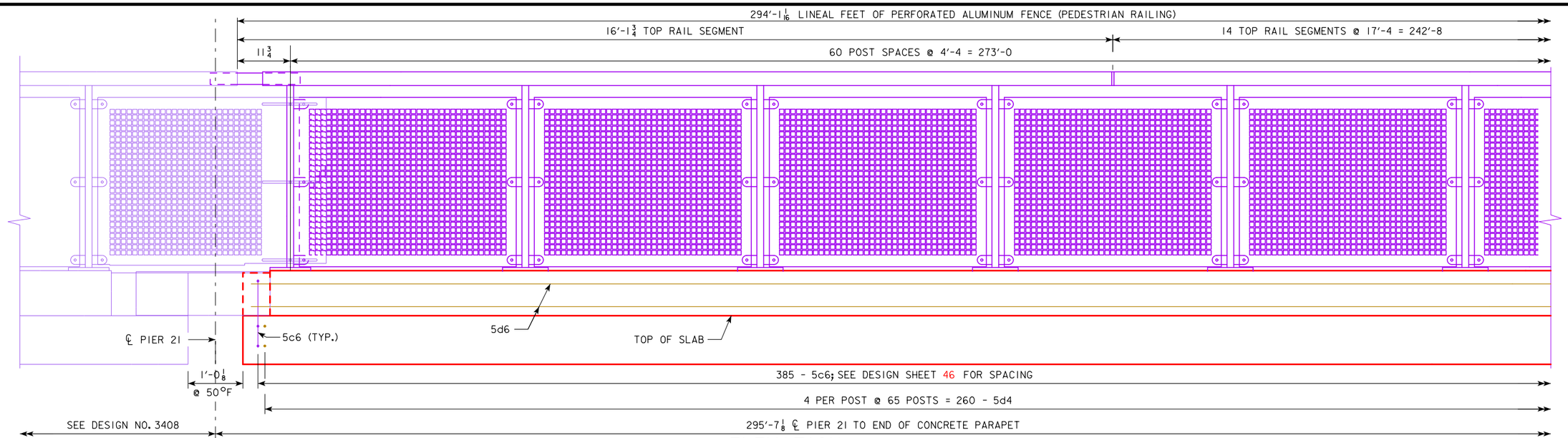

ELEVATION
(LOOKING WEST)

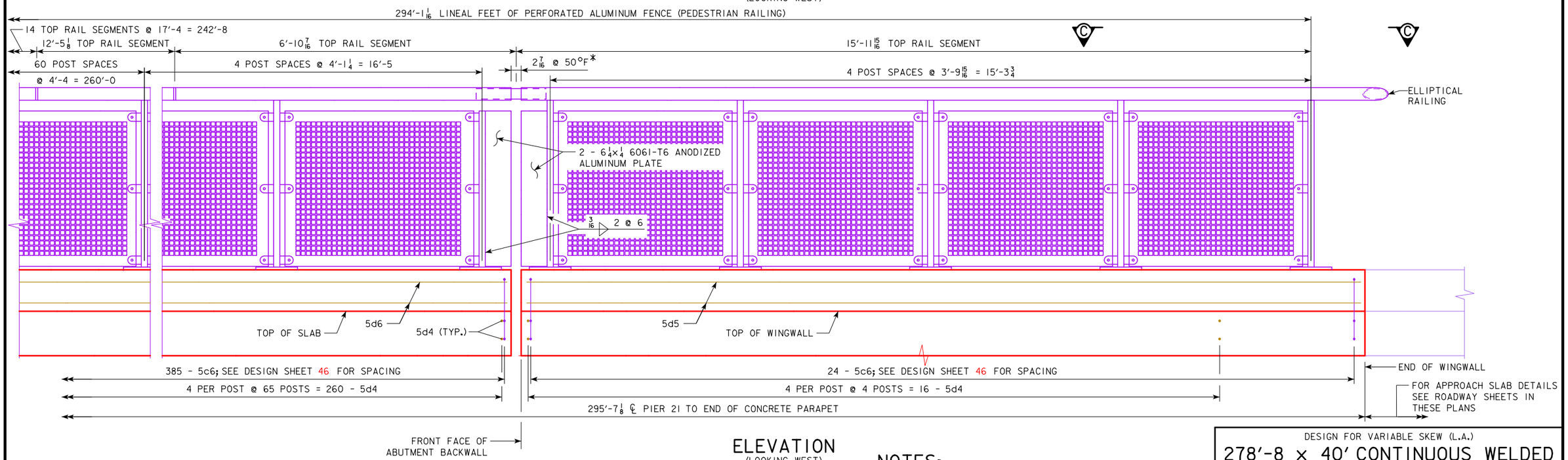

ELEVATION
(LOOKING WEST)

NOTES:

SEE DESIGN SHEETS 48 THRU 50 FOR ADDITIONAL DETAILS.

CLEAR DISTANCE FROM FACE OF CONCRETE TO NEAR REINFORCING BAR SHALL BE 2 INCHES UNLESS OTHERWISE NOTED OR SHOWN.

* MAY VARY DEPENDING ON EXPANSION DEVICE MANUFACTURER.

SEE DESIGN SHEET 49 FOR VIEW C-C DETAILS.

benesch
engineers · scientists · planners
Alfred Benesch & Company
205 North Michigan Avenue, Suite 2400
Chicago, Illinois 60601
312-565-0450 Job No. 10061

DESIGN FOR VARIABLE SKEW (L.A.)

278'-8 x 40' CONTINUOUS WELDED GIRDER BRIDGE W/14' BIKE TRAIL

139'-4 END SPAN 139'-4 INTERIOR SPANS

PEDESTRIAN RAILING DETAILS

STA. 3589+46.06, BASELINE U.S. 67 RAMP C TBD

SCOTT COUNTY

IOWA DEPARTMENT OF TRANSPORTATION - HIGHWAY DIVISION

DESIGN SHEET NO. 47 OF 64 FILE NO. 30253 DESIGN NO. 3608

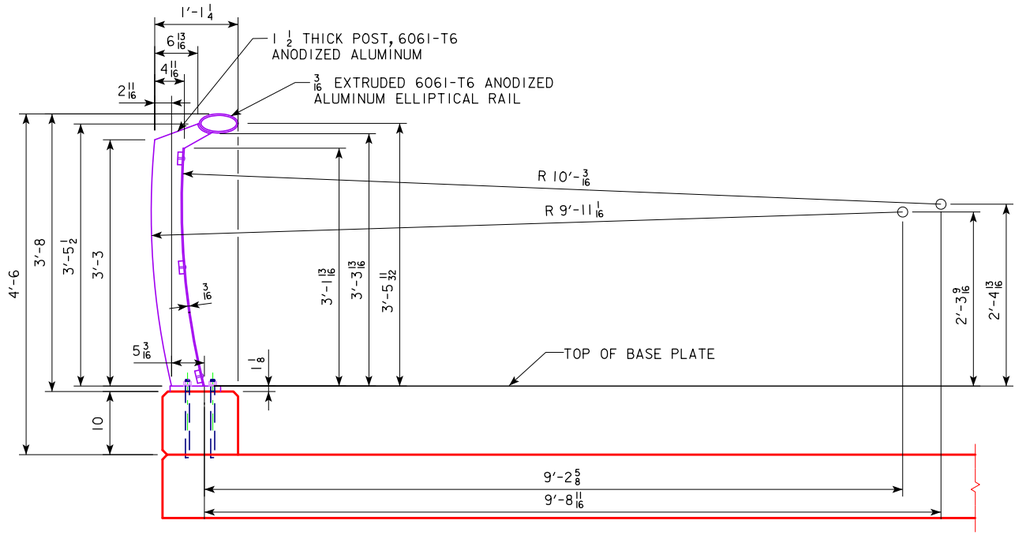

TYPICAL SECTION THRU RAILING

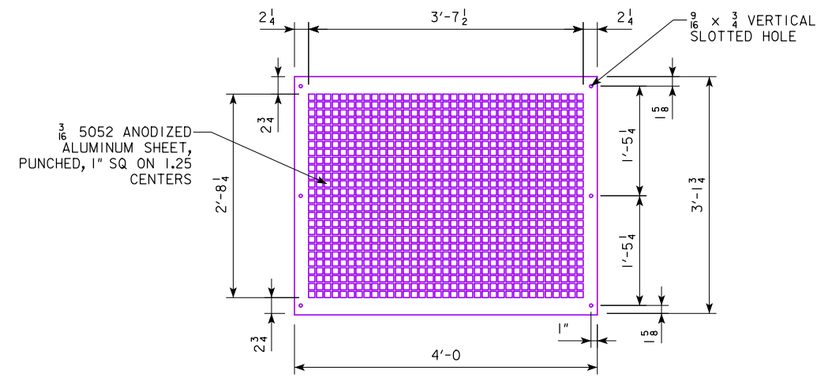

PANEL LAYOUT (FLATTENED)

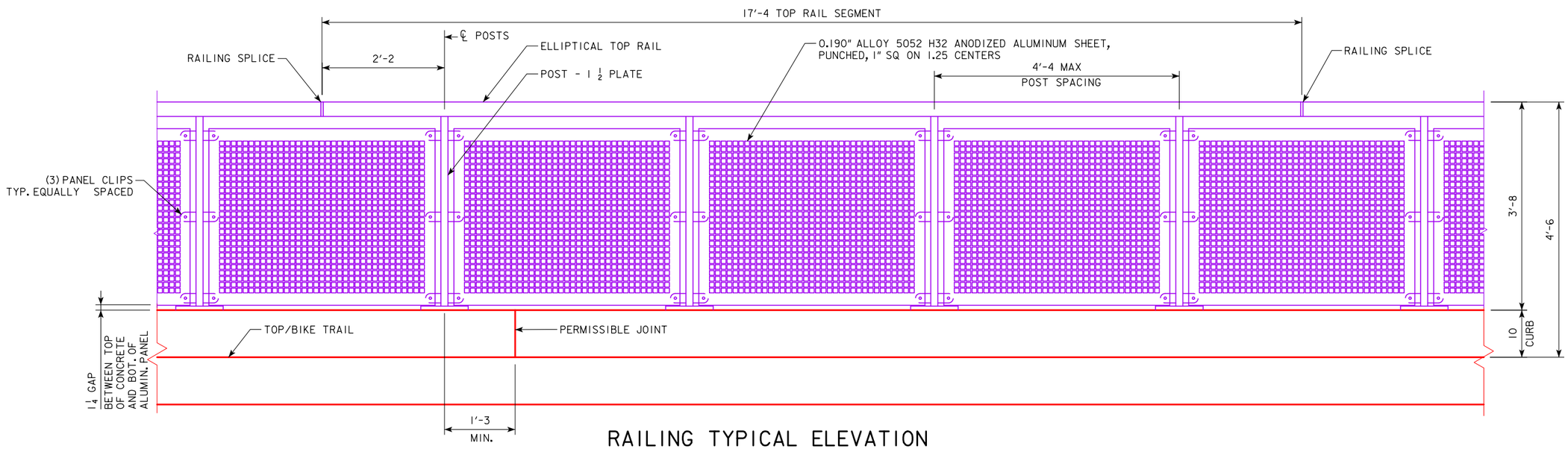

RAILING TYPICAL ELEVATION

NOTE:

SEE DESIGN SHEET 49 FOR NOTES

DESIGN FOR VARIABLE SKEW (L.A.)

278'-8 x 40' CONTINUOUS WELDED GIRDER BRIDGE W/14' BIKE TRAIL

139'-4 END SPAN 139'-4 INTERIOR SPANS

PEDESTRIAN RAILING DETAILS

STA. 3589+46.06, BASELINE U.S. 67 RAMP C TBD

SCOTT COUNTY

IOWA DEPARTMENT OF TRANSPORTATION - HIGHWAY DIVISION

DESIGN SHEET NO. 48 OF 64 FILE NO. 30253 DESIGN NO. 3608

benesch engineers · scientists · planners
Alfred Benesch & Company
205 North Michigan Avenue, Suite 2400
Chicago, Illinois 60601
312-565-0450 Job No. 10061

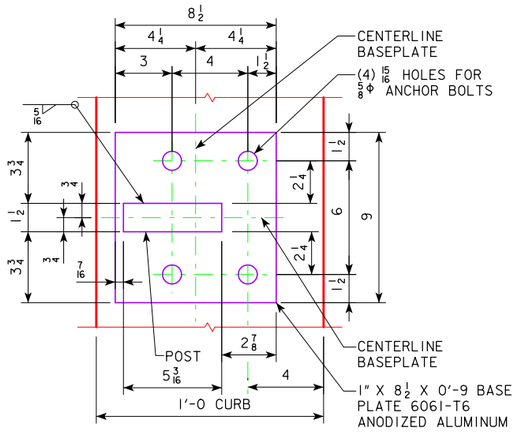

TYPICAL BASE PLATE PLAN DETAIL

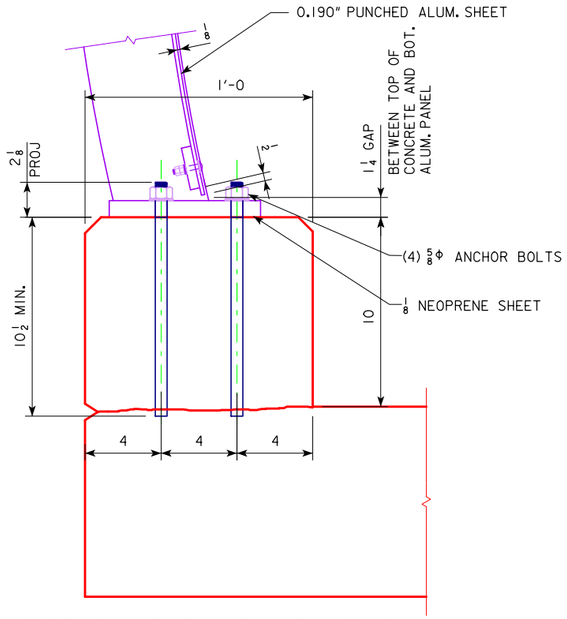

SECTION THRU BASE OF RAILING

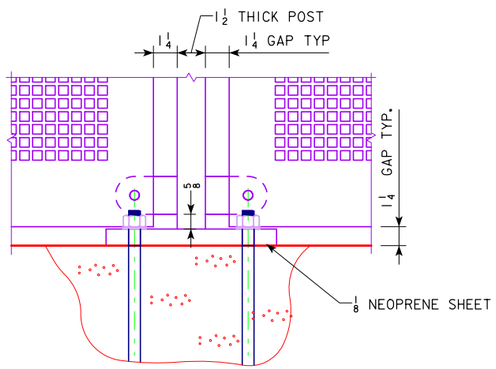

TYP. BOTTOM OF PANEL DETAIL

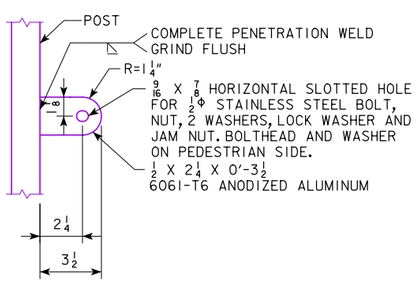

RAILING PANEL CLIP CONNECTION

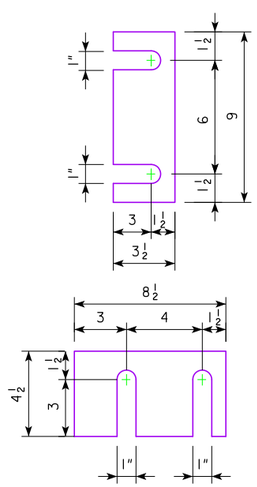

SHIM DETAILS

PEDESTRIAN RAILING NOTES

THE PEDESTRIAN RAIL IS TO BE BID ON A LINEAL FOOT BASIS FOR EACH TYPE, MEASURED END TO END OF RAIL. THE PRICE BID FOR PEDESTRIAN RAIL OF EACH TYPE SHALL BE FULL COMPENSATION FOR FURNISHING ALL MATERIAL, INCLUDING ANCHOR BOLTS AND SHIMS, AND ALL OF THE EQUIPMENT AND LABOR REQUIRED TO ERECT THE RAIL IN ACCORDANCE WITH THESE PLANS AND SPECIFICATIONS.

ALL MATERIALS AND WORKMANSHIP SHALL BE IN ACCORDANCE WITH THE IOWA STANDARD SPECIFICATIONS WITH CURRENT GENERAL SUPPLEMENTAL SPECIFICATIONS.

ENDS OF RAIL SECTIONS ARE TO BE SAWED OR MILLED. ALL CUT ENDS ARE TO BE TRUE, SMOOTH, AND FREE OF BURRS OR RAGGED EDGES.

NO PAINTING WILL BE REQUIRED.

STAINLESS STEEL BOLTS SHALL BE ACCORDING TO ASTM A193-12B, CLASS 1 B8 (30 KSI MINIMUM OR 223 HB MINIMUM) OR CLASS 2 B8 (50 KSI MINIMUM OR 321 HB MINIMUM). STAINLESS STEEL NUTS SHALL BE ACCORDING TO ASTM A194-12 GRADE 8, 8M, OR 8F WITH A UNC SERIES CLASS 2B FIT. STAINLESS STEEL WASHERS SHALL BE PLAIN FLAT, TYPE 304 OR 304L, ACCORDING TO FEDERAL SPECIFICATION FF-W-92. STAINLESS STEEL BOLTS SHALL BE SNUG TIGHTENED IN ACCORDANCE WITH IM 453.07. CARE SHALL BE TAKEN TO AVOID DAMAGE TO THE ALUMINUM WHEN BOLTS ARE TIGHTENED. DAMAGED ALUMINUM TUBES SHALL BE REPLACED BY THE CONTRACTOR AT HIS OWN EXPENSE.

ANCHOR BOLTS SHALL BE 5/8" DIA., A193-12B GR. B7, BE FULLY THREADED WITH HEAVY HEX NUTS AND ONE HARDENED WASHER AND ONE 1 3/4" O.D. WASHER EACH. EMBED THREADED RODS 10 1/2" MIN. INTO CONCRETE PARAPET. ANCHOR BOLTS, NUTS, AND WASHERS SHALL BE GALVANIZED IN ACCORDANCE WITH ASTM F2329. ADHESIVE BONDING MATERIAL SYSTEM SHALL BE IN ACCORDANCE WITH MATERIALS I.M. 491.11. INSTALLED ANCHORS SHALL BE CAPABLE OF OBTAINING AN ULTIMATE LOAD PER THREADED ROD OF 8 KIPS IN TENSION FOR THE SPACING AND EDGE DISTANCE SHOWN IN THE PLANS.

ALUMINUM POST AND FRAMING MEMBERS SHALL COMPLY WITH THE REQUIREMENTS OF ASTM B221-12 AND ASTM B429-10 AND BE OF GRADE 6061-T6 AND MEET AMERICAN NATIONAL STANDARD DIMENSIONAL TOLERANCES FOR ALUMINUM MILL PRODUCTS. ALUMINUM 5052 H32 SHEET PANELS SHALL COMPLY WITH THE REQUIREMENTS OF ASTM B209-10.

ANY WELDS WITH BURRS ON THE FRAMING MEMBER SHALL BE GROUND FLUSH. WELDING SHALL COMPLY WITH THE REQUIREMENTS OF AWS D1.2, STRUCTURAL WELDING CODE - ALUMINUM.

ALUMINUM FILLER ALLOY ER5356 OR ER5556 SHALL BE USED [IOWA DOT STANDARD SPECIFICATIONS 4187.01, A, 7]. ONLY MICROSCOPICALLY CLEAN WELDING WIRE (THOSE WHICH HAVE BEEN SHAVED AFTER DRAWING) SHOULD BE USED, AND SPOOLS OF WIRE REMAINING AT THE END OF THE DAY'S PRODUCTION SHOULD BE SEALED IN POLYETHYLENE BAGS. WELDING WIRE IN DRIVE ROLLS AND GUN NOT SO PROTECTED SHALL BE DISCARDED.

THE INSTALLED ORIENTATION OF THE PUNCHED PANELS MUST BE PUNCHED TOWARD THE INSIDE, WITH THE BREAKOUT SIDE TOWARD THE OUTSIDE IN CASE OF SHARP EDGES AND FOR CONSISTENT APPEARANCE. PUNCHED PANELS SHALL EXHIBIT NO BURRS. IF RAW ALUMINUM STOCK EXHIBITS DIFFERENT FINISHES ON EACH FACE, THE PUNCHING SHALL BE PERFORMED ON THE BRIGHTEST FACE, WHICH SHALL THEN BE MOUNTED TOWARD THE PEDESTRIAN SIDE.

ALL AREAS TO BE WELDED SHALL BE BRUSHED WITH STAINLESS STEEL BRUSHES IMMEDIATELY PRIOR TO WELDING. ALL ALUMINUM WELDING SHALL BE PERFORMED BY THE GAS METAL ARC WELDING (GMAW) PROCESS. ONLY THE STRINGER BEAD TECHNIQUE SHALL BE USED. INTERPASS TEMPERATURE SHALL NOT EXCEED 200 DEGREES FAHRENHEIT. ALL INITIAL ROOT PASSES SHALL NOT EXCEED 5/16 INCH AND MUST PENETRATE THE ROOT. THE CONVEXITY OF A FILLET WELD SHALL NOT EXCEED 1/16 INCH.

POST AND FRAMING MEMBERS SHALL HAVE A SMOOTH, FLUSH SURFACE.

ANODIZE COATING SHALL BE PER AAMA 611-98 - VOLUNTARY SPECIFICATIONS FOR ANODIZED ARCHITECTURAL ALUMINUM. USE A CLASS 1 CLEAR ANODIZED FINISH (REQUIRES MINIMUM COATING THICKNESS OF 0.7 MIL). SURFACE PREPARATION SHALL BE IN ACCORDANCE WITH ASTM D 3933-10.

PROVIDE TWO 1/16 INCH ALUMINUM SHIMS OF EACH TYPE FOR EACH RAILING POST, TO BE USED AS REQUIRED.

PROVIDE AN 1/8 INCH THICK NEOPRENE SHEET BETWEEN CONCRETE AND SHIMS UNDER EACH RAIL POST BASE PLATE. THE NEOPRENE SHEET SHALL MATCH THE LENGTH AND WIDTH OF THE MASONRY PLATE.

THE NEOPRENE SHEETS ARE TO BE 50, 60, OR 70 DUROMETER HARDNESS AND SHALL MEET THE REQUIREMENTS OF IOWA DOT STANDARD SPECIFICATIONS SECTION 4195.02.

APPLY A NEAT CAULK BEAD AROUND PLATE EDGES. DO NOT CONTAMINATE SURROUNDING CONCRETE SURFACES WITH CAULK. CAULK SHALL BE LIGHT GREY NON-SLAG LATEX MARKETED FOR OUTDOOR USE. NO TESTING OR CERTIFICATION IS REQUIRED.

POSTS ARE TO BE SET NORMAL TO GRADE.

PROVIDE A RAILING MOCKUP FOR REVIEW AND APPROVAL. FOR THE PURPOSES OF THE MOCKUP, ONE ASSEMBLY INCLUDING A SINGLE STANDARD RAILING PANEL WITH 2 POSTS AND A TOP RAIL WILL BE REQUIRED.

THE ELLIPTICAL RAIL SHALL BE 6061-T6, 3/16 THICK AND SHALL CONFORM TO THE REQUIREMENTS OF ASTM B429-10. THE HEAT TREATMENT SHALL BE IN ACCORDANCE WITH PRACTICE B918-09.

THE 0.190 IN. THICK PUNCHED PLATE SHALL MEET THE REQUIREMENTS OF ASTM B209-10 ALLOY 5052 TEMPER H32 WITH A MINIMUM YIELD STRENGTH OF 23 KSI AND A MINIMUM ELONGATION OF 9% IN 2 INCHES. PUNCHED PLATES SHALL HAVE STANDARD MILL FINISH.

THE CONTRACTOR SHALL FURNISH A CERTIFICATE STATING THAT EACH LOT HAS BEEN SAMPLED, TESTED BY A CERTIFIED LAB AND INSPECTED IN ACCORDANCE WITH THE SPECIFICATION REQUIREMENT OF THE CORRESPONDING ASTM STANDARD.

IMMEDIATELY FOLLOWING FABRICATION, PROTECT ALL ALUMINUM RAILING AND PANEL SURFACES FROM DAMAGE DURING SHIPPING, HANDLING, STORAGE AND INSTALLATION. PROTECTIVE MEASURES SHALL REMAIN IN PLACE UNTIL FINAL ASSEMBLY AND INSTALLATION. REPAIR OR REPLACEMENT OF DAMAGED COMPONENTS SHALL BE AT THE CONTRACTOR'S COST AND TO THE SATISFACTION OF THE ENGINEER AT NO ADDITIONAL COST TO THE PROJECT.

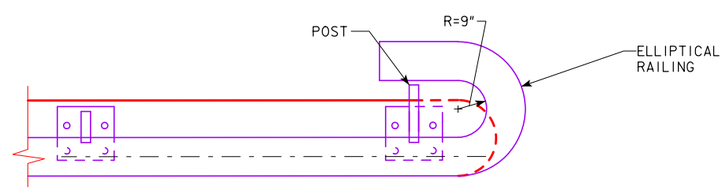

VIEW C-C
PLAN VIEW AT RAILING TERMINATION DETAIL

NOTE:

SEE DESIGN SHEET 47 FOR LOCATION OF VIEW C-C.

DESIGN FOR VARIABLE SKEW (L.A.)

278'-8 x 40' CONTINUOUS WELDED GIRDER BRIDGE W/14' BIKE TRAIL

139'-4 END SPAN 139'-4 INTERIOR SPANS

PEDESTRIAN RAILING DETAILS

STA. 3589+46.06, BASELINE U.S. 67 RAMP C TBD

SCOTT COUNTY

IOWA DEPARTMENT OF TRANSPORTATION - HIGHWAY DIVISION

DESIGN SHEET NO. 49 OF 64 FILE NO. 30253 DESIGN NO. 3608

benesch engineers · scientists · planners
Alfred Benesch & Company
205 North Michigan Avenue, Suite 2400
Chicago, Illinois 60601
312-565-0450 Job No. 10061

2:27:10 PM untitled c:\pwise_work\do_not_delete\dms05641\82074200.brg
MODEL: $MODEL

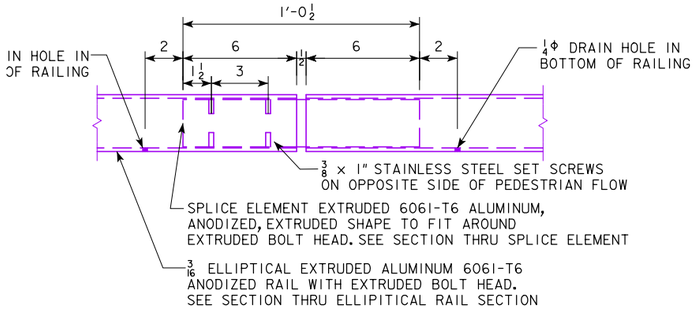

TYPICAL ELLIPTICAL RAILING SPLICE DETAIL

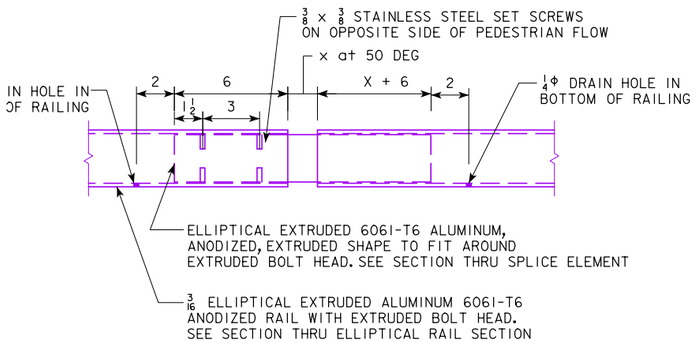

TYPICAL ELLIPTICAL RAILING EXPANSION JOINT SPLICE DETAIL

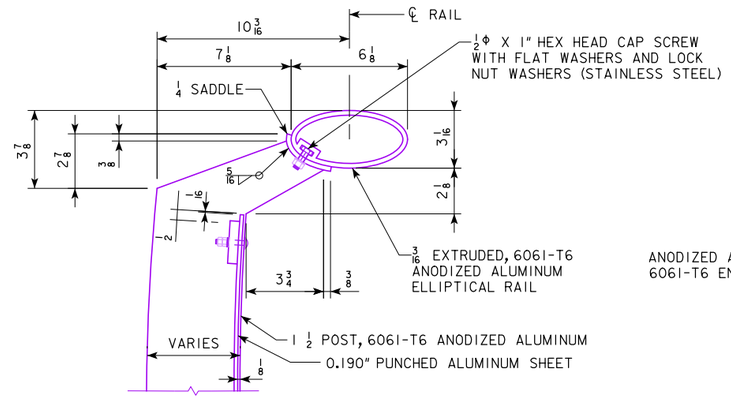

ELLIPTICAL RAILING POST CONNECTION DETAIL

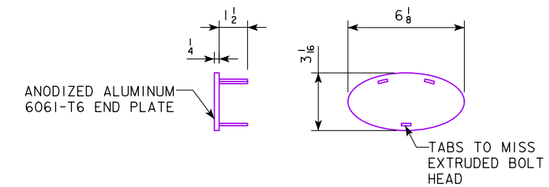

CAST END CAP FOR ELLIPTICAL RAIL

DRIVE FIT TYPE

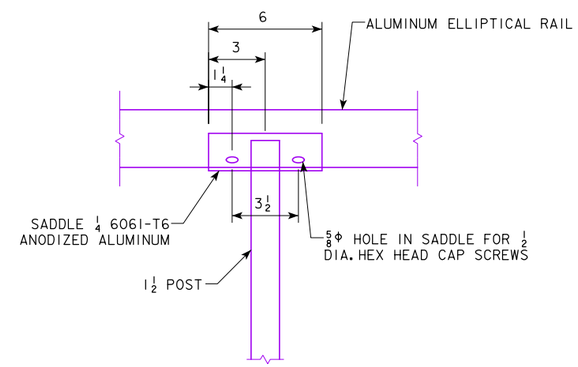

ELLIPTICAL RAILING CONNECTION LOOKING AT BACK FACE

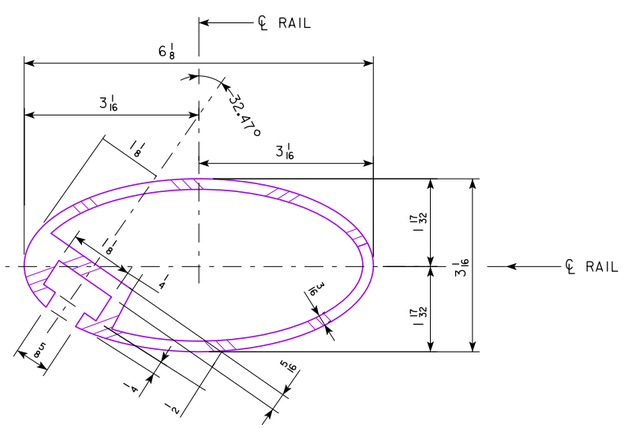

SECTION THRU ELLIPTICAL RAIL SECTION

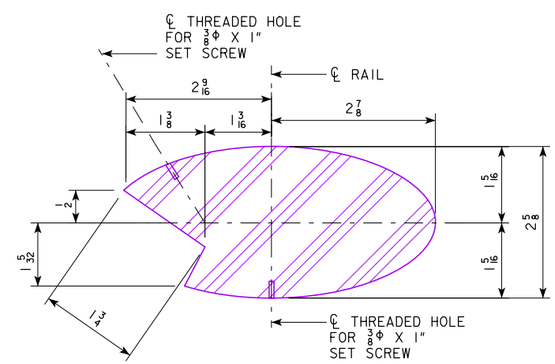

SECTION THRU SPLICE ELEMENT

NOTE: SPLICE MUST BE A SLIDING FIT IN RAIL SECTION

benesch
engineers · scientists · planners

Alfred Benesch & Company
205 North Michigan Avenue, Suite 2400
Chicago, Illinois 60601
312-565-0450 Job No. 10061

DESIGN FOR VARIABLE SKEW (L.A.)

278'-8 x 40' CONTINUOUS WELDED GIRDER BRIDGE W/14' BIKE TRAIL

139'-4 END SPAN 139'-4 INTERIOR SPANS

PEDESTRIAN RAILING DETAILS

STA. 3589+46.06, BASELINE U.S. 67 RAMP C TBD

SCOTT COUNTY

IOWA DEPARTMENT OF TRANSPORTATION - HIGHWAY DIVISION

DESIGN SHEET NO. 50 OF 64 FILE NO. 30253 DESIGN NO. 3608

DESIGN TEAM DMS/DMS/SLD	SCOTT COUNTY	PROJECT NUMBER BRFIM-074-1(200)5--05-82	SHEET NUMBER 333

2:27:17 PM untitled c:\pwise_work\do_not_delete\dms05641\82074200.brg
MODEL: $MODEL

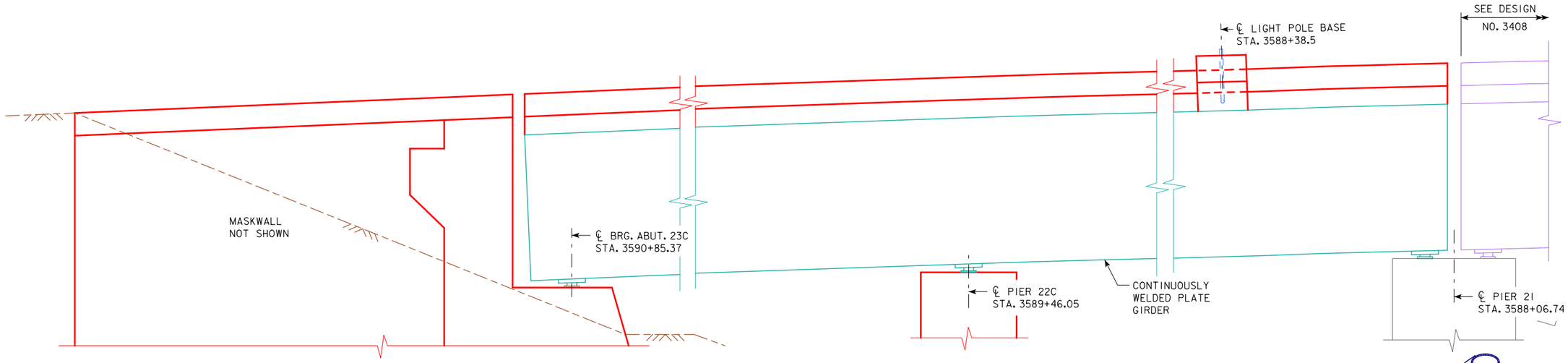

PEDESTRIAN RAILING ELEVATION

(LOOKING EAST)(PEDESTRIAN RAILING NOT SHOWN)

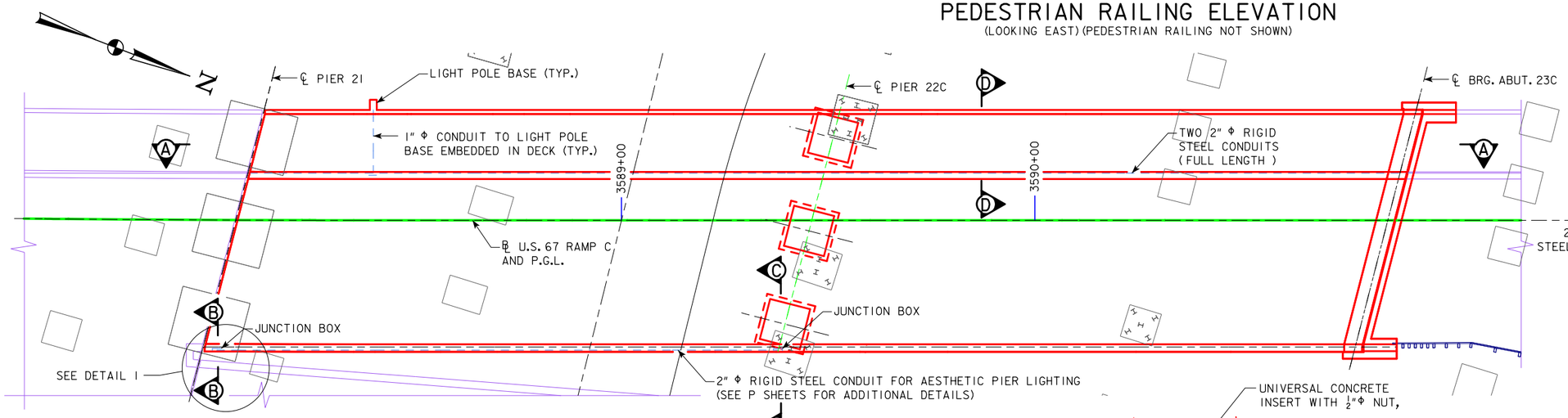

PLAN

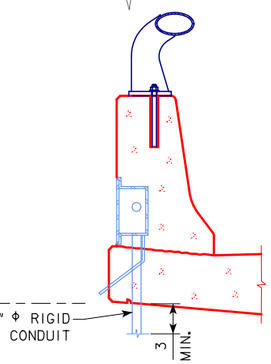

SECTION B-B

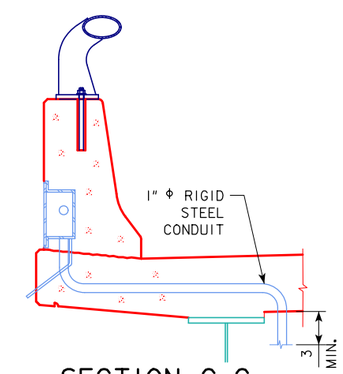

SECTION C-C

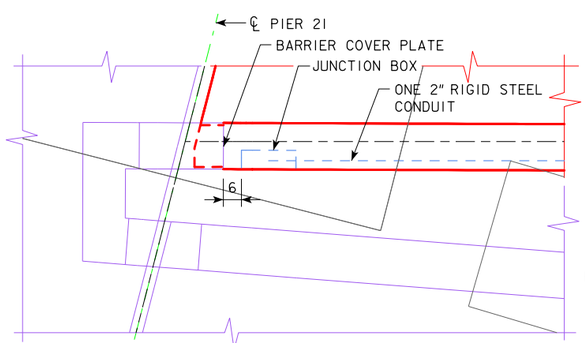

DETAIL 1

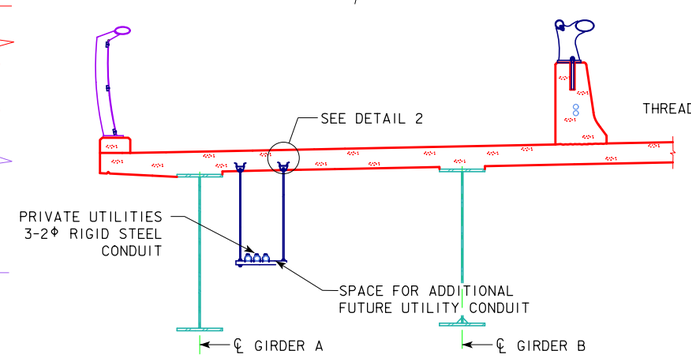

SECTION D-D

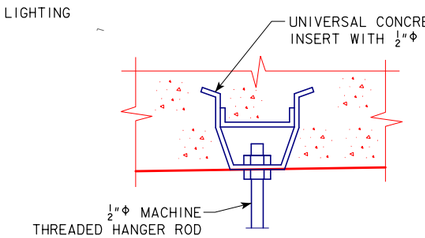

DETAIL 2

NOTES:

WORK THIS SHEET WITH DESIGN SHEETS 52 AND 53.

CONDUIT INSTALLATION SHALL BE IN ACCORDANCE WITH ARTICLE 2523.03, N, OF THE STANDARD SPECIFICATIONS.

COST FOR UNIVERSAL INSERTS INCLUDED WITH CONCRETE BARRIER RAILING. SEE ROADWAY PLANS FOR DETAILS OF CONDUIT AND HANGER ASSEMBLIES.

INTERNALLY THREADED CONCRETE INSERTS SHALL BE GALVANIZED STEEL AND MEET THE REQUIREMENTS OF I.M. 453.09. CONCRETE INSERTS SHALL BE CAST-IN-PLACE WITH A MINIMUM ALLOWABLE TENSION LOAD OF 500 LBS.

DESIGN FOR VARIABLE SKEW (L.A.)

278'-8 x 40' CONTINUOUS WELDED GIRDER BRIDGE W/14' BIKE TRAIL

139'-4 END SPAN 139'-4 INTERIOR SPANS

LIGHTING DETAILS

STA. 3589+46.06, BASELINE U.S. 67 RAMP C TBD

SCOTT COUNTY

IOWA DEPARTMENT OF TRANSPORTATION - HIGHWAY DIVISION

DESIGN SHEET NO. 51 OF 64 FILE NO. 30253 DESIGN NO. 3608

benesch engineers · scientists · planners
Alfred Benesch & Company
205 North Michigan Avenue, Suite 2400
Chicago, Illinois 60601
312-565-0450 Job No. 10061

2:27:27 PM untitled c:\pwise_work\do_not_delete\dms05641\82074200.brg
MODEL: $MODEL

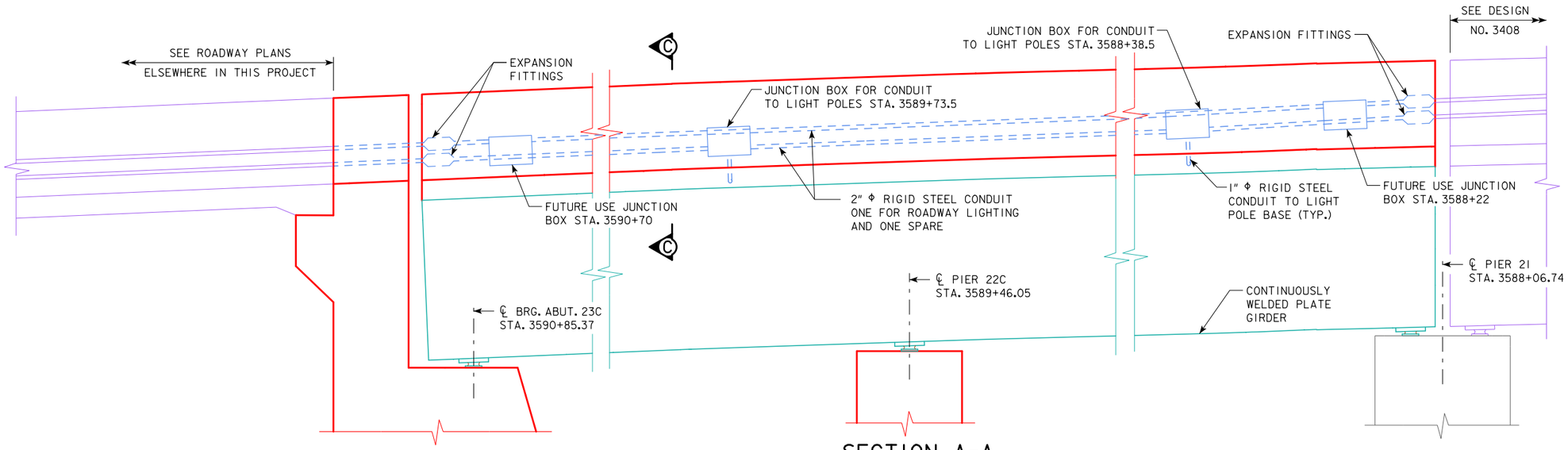

SECTION A-A

(LOOKING EAST)(STEEL RAILING NOT SHOWN)

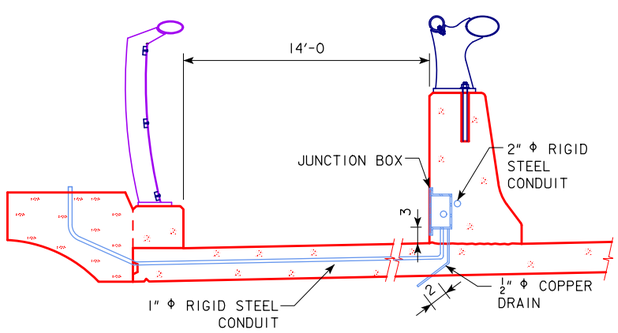

PART SECTION AT LIGHT POLE BASE

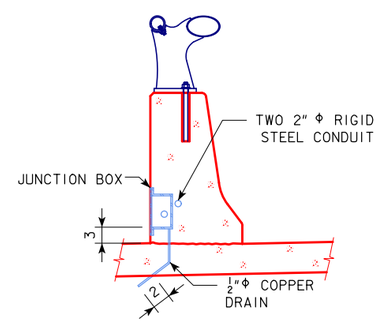

SECTION THRU FUTURE USE CONDUIT JUNCTION BOX

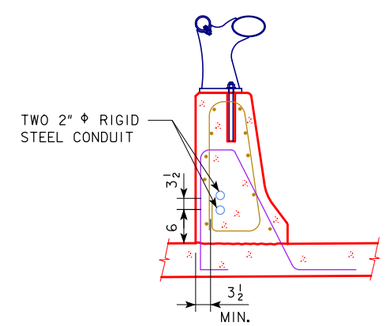

SECTION C-C

NOTES:

TRAFFIC AND BICYCLE BARRIER RAILING:
FUTURE USE CONDUIT SHALL NOT ENTER THE ROADWAY LIGHT JUNCTION BOXES AND THE ROADWAY LIGHT CONDUIT SHALL NOT ENTER THE JUNCTION BOX FOR THE FUTURE USE CONDUIT.

THE STEEL CONDUIT SHALL BE SECURELY TIED AT EVERY 3'-0 INTERSECTION WITH THE 5c1 BARS TO AVOID CONTACT WITH THE STAINLESS STEEL 5c2.

WORK THIS SHEET WITH DESIGN SHEETS 51 AND 53.

DESIGN FOR VARIABLE SKEW (L.A.)

278'-8 x 40' CONTINUOUS WELDED GIRDER BRIDGE W/14' BIKE TRAIL

139'-4 END SPAN 139'-4 INTERIOR SPANS

LIGHTING DETAILS

STA. 3589+46.06, BASELINE U.S. 67 RAMP C TBD

SCOTT COUNTY

IOWA DEPARTMENT OF TRANSPORTATION - HIGHWAY DIVISION

DESIGN SHEET NO. 52 OF 64 FILE NO. 30253 DESIGN NO. 3608

benesch engineers · scientists · planners
Alfred Benesch & Company
205 North Michigan Avenue, Suite 2400
Chicago, Illinois 60601
312-565-0450 Job No. 10061

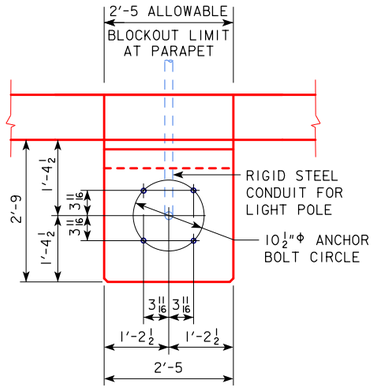

PLAN OF POLE BASE

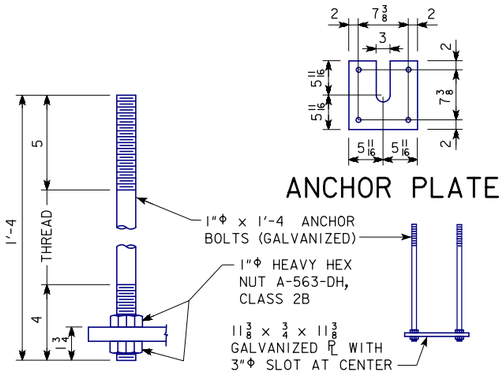

ANCHOR PLATE

ANCHOR BOLTS

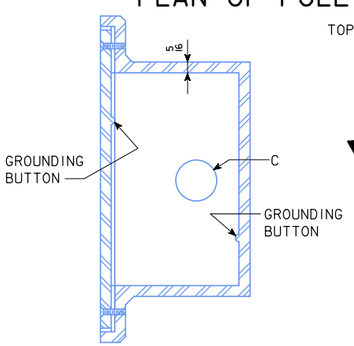

SECTION B-B

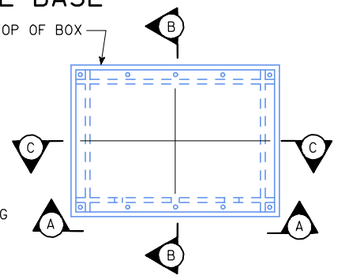

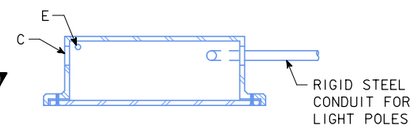

SECTION C-C

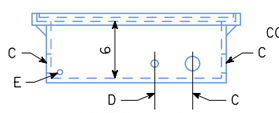

VIEW A-A

BOSSED FOR	HOLE	FOR CONDUIT SIZE
5 THREADS	*C	2"Φ RIGID STEEL
NONE	D	1"Φ RIGID STEEL
NONE	E	½"Φ COPPER PIPE

NOTE:
THE GROUNDING BUTTONS ARE TO BE BLIND DRILLED AND TAPPED FOR ⅜" x 0'-0¾ BOLTS.

*SIZE OF LIGHT POLE CONDUIT IS DEPENDENT ON LABELED SIZE SHOWN ON THIS SHEET (SEE ENCIRCLED NOTE FOR LIGHT POLE CONDUIT SIZE).

LI-104, TYPE I JUNCTION BOX
WATERTIGHT, CAST IRON - FLUSH MOUNT

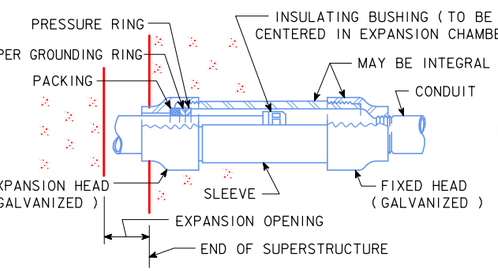

NOTE: EXPANSION CHAMBER LENGTH SHALL ACCOMMODATE A TOTAL MOVEMENT OF 2½ INCHES AT ABUT. 23C AND 5½ INCHES AT PIER 21.

EXPANSION FITTING DETAIL
(4 REQUIRED)

LIGHTING NOTES:

SEE LI-104 STANDARD ROAD PLAN FOR ADDITIONAL INFORMATION ON JUNCTION BOXES.

CONSTRUCTION SHALL CONFORM TO THE CURRENT IOWA D.O.T. STANDARD AND SUPPLEMENTAL SPECIFICATIONS AND SPECIAL PROVISIONS.

CONDUIT INSTALLATION SHALL BE IN ACCORDANCE WITH ARTICLE 2523.03, N, OF THE STANDARD SPECIFICATIONS.

ALL "C" ENTRANCE HOLES IN JUNCTION BOXES SHALL BE DRILLED AND TAPPED FOR THE SPECIFIED CONDUIT SIZE. ALL OTHER HOLES SHALL HAVE A CONCRETE - TIGHT SLIP FIT. CONDUIT ENDS SHALL NOT PROTRUDE INTO JUNCTION BOX MORE THAN ¼". DRAIN PIPE END SHALL BE FLUSH WITH INSIDE SURFACE OF BOX. GROUNDING BUTTONS SHALL BE LOCATED APPROXIMATELY 3" FROM THE INSIDE SURFACE OF THE BOX WALL, AND NOT CLOSER THAN 3" TO THE EDGE OF ANY HOLE IN THE BOX FLOOR. HOLES FOR DRAIN PIPE SHALL BE PLACED IN THE LOW CORNER OF THE BOX, WITH A MINIMUM CLEARANCE OF 1" BETWEEN THE EDGE OF THE HOLE AND THE INSIDE SURFACE OF THE BOX WALL. TYPICAL DETAILS ARE SHOWN ON THIS SHEET.

THE RIGID STEEL CONDUIT, JUNCTION BOXES AND FITTINGS INCLUDING LABOR AND ANY ADDITIONAL WORK TO DO THE INSTALLATION IS CONSIDERED INCIDENTAL TO THE COST OF THE RAILING.

THE WEIGHT OF REINFORCING STEEL IS INCLUDED IN THE SUPERSTRUCTURE ESTIMATED QUANTITIES.

COST OF FURNISHING AND INSTALLING POLES, LIGHTS AND LIGHTING CONDUCTOR IS NOT A PART OF THIS CONTRACT.

EXPANSION FITTING SHALL BE AS SPECIFIED OR AS APPROVED BY THE ENGINEER. TYPICAL DETAILS ARE SHOWN ON THIS SHEET.

ALL ANCHOR BOLT MATERIAL SHALL COMPLY WITH THE REQUIREMENTS OF IOWA DOT MATERIALS I.M. 453.08.

WELDING OF ANCHOR BOLTS SHALL NOT BE ALLOWED. THE CONTRACTOR SHALL OBTAIN A TEMPLATE FROM THE MANUFACTURER / FABRICATOR FOR PROPER PLACEMENT OF THE ANCHOR BOLTS.

ALL REINFORCING STEEL IS TO BE EPOXY COATED AND GRADE 60.

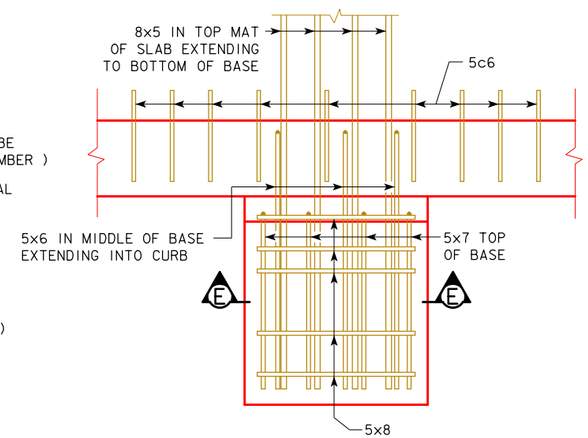

PLAN OF POLE BASE REINFORCING

EPOXY REINFORCING STEEL- ONE BASE

BAR	LOCATION	SHAPE	NO.	LENGTH	WEIGHT
8x5	SLAB ANCHOR		4	9'-4	100
5x6	CURB ANCHOR		3	4'-8	15
5x7	BASE TOP BAR		4	3'-2	13
5x8	BASE HOOP		5	VARIES	40
5x9	SLAB ANCHOR		4	5'-0	21
(INCLUDED IN SUPERSTRUCTURE QTY'S)		TOTAL WEIGHT (LBS.)			189

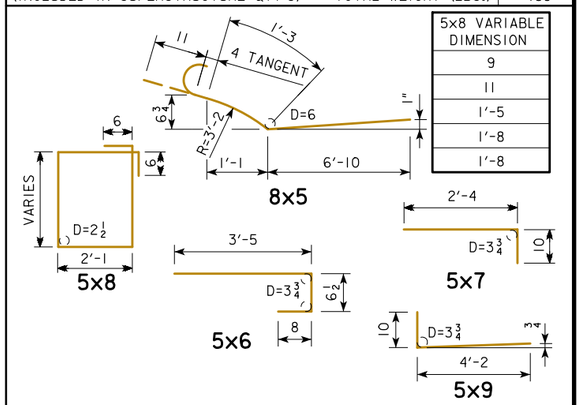

NOTE: ALL DIMENSIONS ARE OUT TO OUT. D = PIN DIAMETER.

LIGHTING QUANTITIES

ITEM	AMOUNT
HIGH PERFORMANCE STRUCTURAL CONCRETE (FOR INFORMATION ONLY)	0.5 C.Y.
REINFORCING STEEL - EPOXY COATED (INCLUDED IN SUPERSTRUCTURE QUANTITIES)	189 LBS.

NOTE:
FOR LOCATION OF CONDUITS NEEDED SEE LIGHTING DETAILS SHEET. QUANTITIES FOR REINFORCING STEEL FOR POLE BASES ARE INCLUDED IN THE SUPERSTRUCTURE QUANTITIES ON DESIGN SHEET 35. CONCRETE QUANTITY INCLUDES 2'-5 CURB BLOCKOUT AND BASE. COST OF CONCRETE IS INCLUDED IN THE BID ITEM FOR CONCRETE PARAPET, FENCE. ANCHOR BOLTS AND PLATES TO BE INCLUDED IN PRICE BID FOR CONCRETE PARAPET, FENCE.

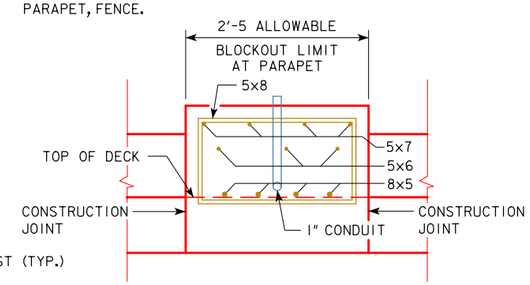

SECTION E-E

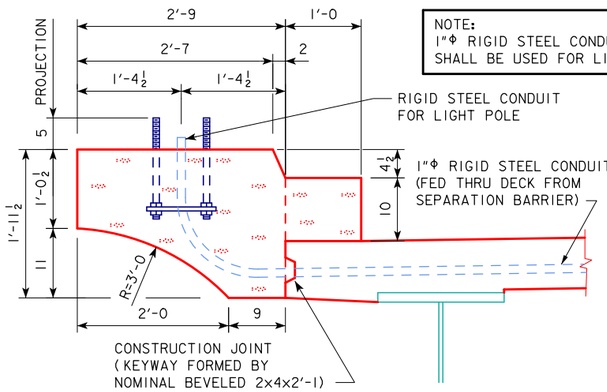

NOTE:
1"Φ RIGID STEEL CONDUIT SHALL BE USED FOR LIGHT POLES.

SECTION D-D

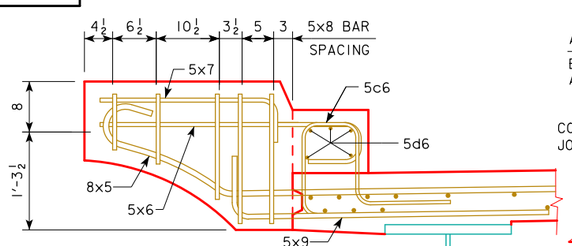

SECTION THROUGH BASE SHOWING REINFORCING

NOTE: CONCRETE PARAPET, FENCE REINFORCING SHOWN FOR INFORMATION ONLY. REFER TO CONCRETE PARAPET, FENCE SHEETS FOR BAR PLACEMENT. TRANSVERSE DECK REINFORCING NOT SHOWN. LONGITUDINAL DECK REINFORCING SHOWN FOR INFORMATION ONLY. REFER TO DECK REINFORCING SHEET FOR BAR PLACEMENT.

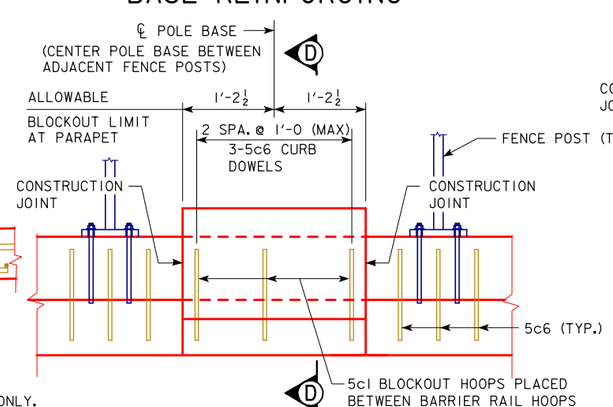

ELEVATION

NOTE: ANCHOR POLE BOLTS NOT SHOWN.

DESIGN FOR VARIABLE SKEW (L.A.)

278'-8 x 40' CONTINUOUS WELDED GIRDER BRIDGE W/14' BIKE TRAIL

139'-4 END SPAN 139'-4 INTERIOR SPANS

LIGHTING DETAILS

STA. 3589+46.06, BASELINE U.S. 67 RAMP C TBD

SCOTT COUNTY

IOWA DEPARTMENT OF TRANSPORTATION - HIGHWAY DIVISION

DESIGN SHEET NO. 53 OF 64 FILE NO. 30253 DESIGN NO. 3608

benesch engineers · scientists · planners
Alfred Benesch & Company
205 North Michigan Avenue, Suite 2400
Chicago, Illinois 60601
312-565-0450 Job No. 10061

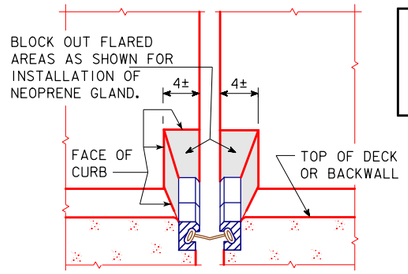

BLOCKOUT DETAIL

(DRAWN FOR 0° SKEW FOR ILLUSTRATIVE PURPOSES)

CONTRACTOR TO NOTE THAT THE CAP SCREW ANCHORAGE SYSTEM FOR THE $\frac{3}{8}$" BARRIER PLATES ARE ALWAYS TO BE PLACED ON THE ONCOMING TRAFFIC SIDE.

NOTE:
SEE DESIGN SHEET 56 FOR EXPANSION DEVICE NOTES CONTAINING THE STEEL EXTRUSION NOTES, NEOPRENE GLAND NOTES, AND WATERTIGHT INTEGRITY TESTING AND REPAIR NOTES.

SOCKET FLAT COUNTERSUNK HEAD CAP SCREW DETAIL

BARRIER PLATE NOTE:

THE MATERIAL USED FOR THE BARRIER PLATES IS TO BE ASTM A-36 STEEL. THE BOLTS SHALL MEET THE REQUIREMENTS OF ASTM A-307. THE PLATES, BOLTS, NUTS AND CAP SCREWS ARE TO BE GALVANIZED IN ACCORDANCE WITH ARTICLE 4100.07 OF THE STANDARD SPECIFICATIONS.

NOTE:

SEE DESIGN SHEET 55 FOR SECTIONS D-D AND E-E DETAILS.

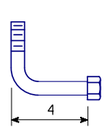

BENT BOLT DETAIL

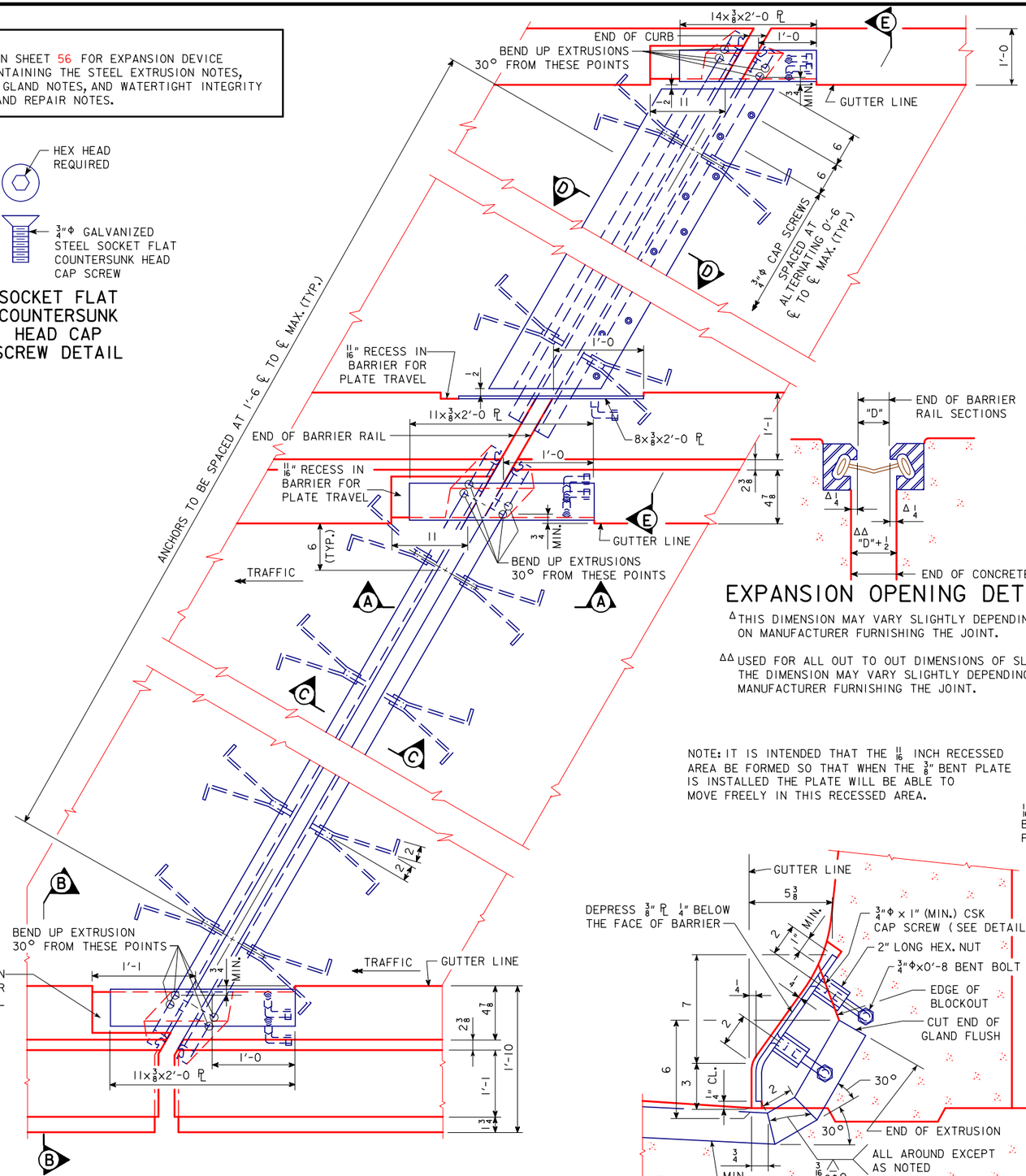

PART PLAN VIEW OF EXPANSION DEVICE L.A. SKEW

TABLE OF APPROVED EXPANSION DEVICES		
MANUFACTURER	TYPE OF STEEL EXTRUSION	NEOPRENE GLAND
WATSON-BOWMAN & ACME CORP.	A	SE-300
D.S. BROWN CO.	SSA2	A2R-400
APPROVED EQUAL		

EXPANSION JOINT SETTINGS, "D"	
WATSON-BOWMAN	D.S. BROWN CO.
$1\frac{1}{2}$ AT 90° F.	2 AT 90° F.
$1\frac{15}{16}$ AT 50° F.	$2\frac{7}{16}$ AT 50° F.
$2\frac{5}{16}$ AT 10° F.	$2\frac{13}{16}$ AT 10° F.
MAXIMUM INSTALLATION TEMP. = 90° F.	MAXIMUM INSTALLATION TEMP. = 90° F.

NOTE: JOINT SETTINGS FOR OTHER TEMPERATURES ARE PROPORTIONAL. TEMPERATURES SHOWN ARE CONCRETE DECK TEMPERATURES ON THE UNDERSIDE OR SHADED PORTION OF THE DECK.

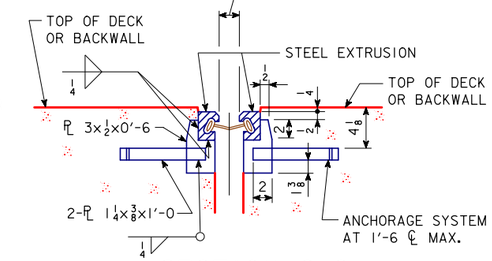

EXPANSION OPENING DETAIL

Δ THIS DIMENSION MAY VARY SLIGHTLY DEPENDING ON MANUFACTURER FURNISHING THE JOINT.

$\Delta\Delta$ USED FOR ALL OUT TO OUT DIMENSIONS OF SLAB. THE DIMENSION MAY VARY SLIGHTLY DEPENDING ON MANUFACTURER FURNISHING THE JOINT.

SECTION C-C

NOTE: IT IS INTENDED THAT THE $\frac{11}{16}$ INCH RECESSED AREA BE FORMED SO THAT WHEN THE $\frac{3}{8}$" BENT PLATE IS INSTALLED THE PLATE WILL BE ABLE TO MOVE FREELY IN THIS RECESSED AREA.

THIS PORTION OF THE $\frac{3}{8}$" BENT PLATE IS TO BE PAINTED WITH A COLORLESS OIL, OR SOME OTHER SATISFACTORY MEANS TO PREVENT CONCRETE FROM ADHERING TO THE PLATE SO THAT THE PLATE CAN BE REMOVED IF NECESSARY. (TYP. ALL $\frac{3}{8}$" BENT PLATES)

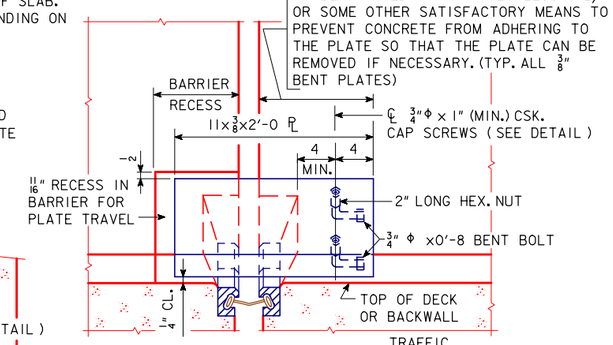

SECTION A-A

(DRAWN FOR 0° SKEW FOR ILLUSTRATIVE PURPOSES)

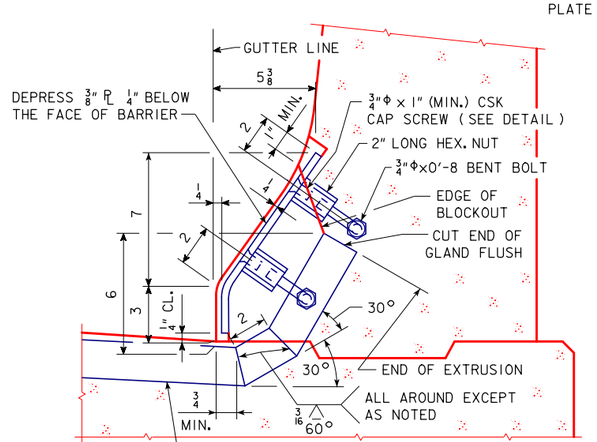

SECTION B-B

DESIGN FOR VARIABLE SKEW (L.A.)

278'-8 × 40' CONTINUOUS WELDED GIRDER BRIDGE W/14' BIKE TRAIL

139'-4 END SPAN 139'-4 INTERIOR SPANS

EXPANSION DEVICE DETAILS

STA. 3589+46.06, BASELINE U.S. 67 RAMP C TBD

SCOTT COUNTY

IOWA DEPARTMENT OF TRANSPORTATION - HIGHWAY DIVISION

DESIGN SHEET NO. 54 OF 64 FILE NO. 30253 DESIGN NO. 3608

benesch engineers · scientists · planners
Alfred Benesch & Company
205 North Michigan Avenue, Suite 2400
Chicago, Illinois 60601
312-565-0450 Job No. 10061

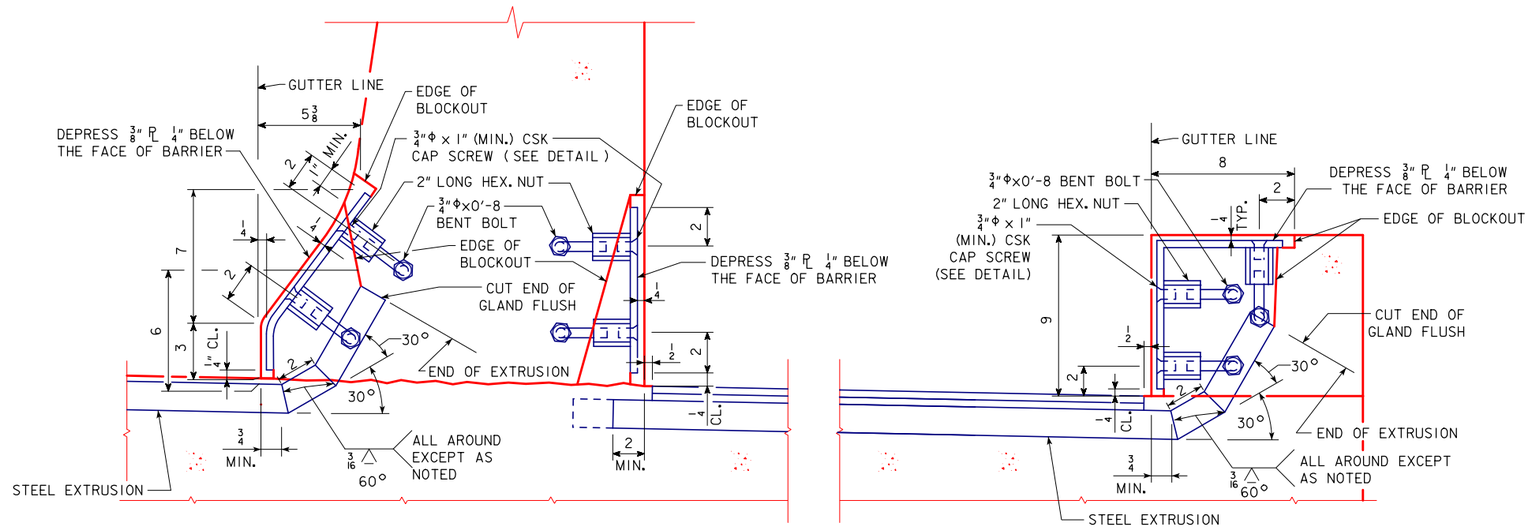

SECTION E-E

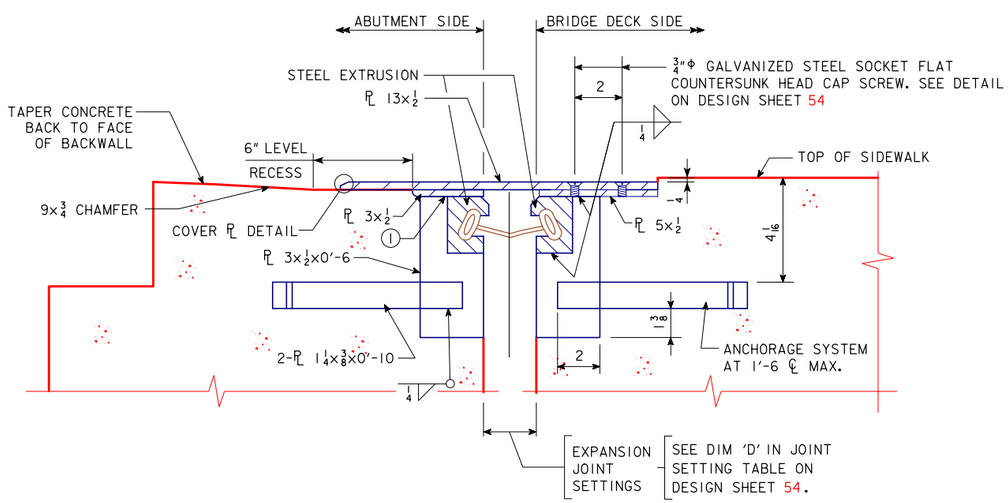

SECTION D-D

(1) PROVIDE 3/4Φ AIR BLEED VENT HOLES SPACED AT 1'-6

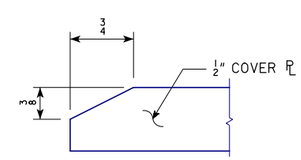

COVER PL DETAIL

NOTE:

NON-SKID TEXTURE ON 11x1/2 COVER PLATE SHALL MEET THE REQUIREMENTS OF ASTM A786 WITH RAISED FIGURES. FIGURES SHALL BE ANGULAR. ROUNDED FIGURES WILL NOT BE ACCEPTED.

benesch engineers · scientists · planners
Alfred Benesch & Company
205 North Michigan Avenue, Suite 2400
Chicago, Illinois 60601
312-565-0450 Job No. 10061

DESIGN FOR VARIABLE SKEW (L.A.)

278'-8 x 40' CONTINUOUS WELDED GIRDER BRIDGE W/14' BIKE TRAIL

139'-4 END SPAN 139'-4 INTERIOR SPANS

EXPANSION DEVICE DETAILS

STA. 3589+46.06, BASELINE U.S. 67 RAMP C TBD

SCOTT COUNTY

IOWA DEPARTMENT OF TRANSPORTATION - HIGHWAY DIVISION

DESIGN SHEET NO. 55 OF 64 FILE NO. 30253 DESIGN NO. 3608

2:27:55 PM untitled c:\pwise_work\do_not_delete\dms05641\82074200.brg
MODEL: $MODEL

STEEL EXTRUSION NOTES:

THE CONTRACTOR SHALL SUBMIT FOR APPROVAL SHOP DRAWINGS OF THE EXPANSION DEVICES SHOWING LAYOUT, MATERIAL TO BE USED, AND PROVISIONS FOR HOLDING DEVICE DURING PLACEMENT OF CONCRETE.

THE EXPANSION DEVICE SHALL BE GALVANIZED AFTER WELDING.

THE EXPANSION DEVICE IS TO BE PARALLEL TO GRADE.

CAP SCREWS SHALL BE COUNTERSUNK $\frac{1}{16}$" BELOW TOP OF THE PLATE.

THE MINIMUM GRADE OF STRUCTURAL STEEL FOR THE EXPANSION DEVICE SHALL BE ASTM A-36.

BLOCKOUT DETAILS MAY BE ALTERED FROM THOSE SHOWN PROVIDED THE GLAND MAY BE INSTALLED AND REMOVED IF NECESSARY AND THE CURB AREA REMAINS WATERTIGHT.

SHOP AND OR FIELD SPLICES OF THE STEEL EXTRUSION WILL BE PERMITTED. FIELD SPLICES OF THE STEEL EXTRUSION SHALL BE MADE AT THE STAGING JOINTS IF CONSTRUCTION IS STAGED. GALVANIZED COATING DAMAGED BY FIELD WELDING SHALL BE REPAIRED IN ACCORDANCE WITH MATERIALS I.M. 410. PIECES OF STEEL EXTRUSION IN THE 15 FT. TO 22 FT. RANGE SHALL BE USED TO FORM THE REQUIRED GUTTER TO GUTTER LENGTH. THE INDIVIDUAL LENGTH OF PIECES SHALL BE CHOSEN SO THAT A MINIMUM NUMBER OF SPLICES IS REQUIRED. ALL PIECES SHALL BE JOINED WITH A PREQUALIFIED PARTIAL PENETRATION SINGLE GROOVE WELD, AND ALL SURFACES NOT IN CONTACT WITH CONCRETE ARE TO BE GROUND FLUSH. NO WELD SHALL BE PERMITTED IN THE INTERNAL SECTION OF THE EXTRUSION WHERE THE NEOPRENE GLAND IS TO BE LOCATED.

THE NUMBER OF FEET OF STEEL EXTRUSION INSTALLED SHALL BE PAID FOR AT THE CONTRACT PRICE PER FOOT BASED ON PLAN QUANTITIES. THE PRICE BID FOR "STEEL EXTRUSION JOINT W/NEOPRENE" SHALL INCLUDE THE COST OF FURNISHING BUT NOT THE COST OF INSTALLING THE NEOPRENE GLAND. THE CONTRACT PRICE BID FOR "STEEL EXTRUSION JOINT W/NEOPRENE" SHALL BE FULL COMPENSATION FOR FURNISHING AND INSTALLING STEEL EXTRUSIONS. THIS WORK WILL CONSIST OF FURNISHING ALL REQUIRED MATERIALS, (INCLUDING THE $\frac{3}{8}$" PLATES AT THE CURBS AND THEIR ANCHORAGE SYSTEMS), AND THE INSTALLATION AND ADJUSTMENT OF THE EXPANSION JOINTS IN ACCORDANCE WITH THE DETAILS SHOWN ON THE PLANS AND AS DIRECTED BY THE ENGINEER. THE FURNISHING AND INSTALLATION OF ALL NECESSARY HARDWARE AND ACCESSORIES AS SUPPLIED BY THE EXPANSION JOINT MANUFACTURER ARE TO BE INCLUDED IN THIS WORK, INCLUDING THE ANCHORAGE SYSTEM AND ANY TEMPORARY ERECTION MATERIAL. ALL WORK AND MATERIALS FOR THE INSTALLATION OF THE EXPANSION JOINTS ARE TO COMPLY WITH THE WRITTEN RECOMMENDATIONS OF THE EXPANSION JOINT MANUFACTURER.

NEOPRENE GLAND NOTES:

THE NEOPRENE GLAND IS TO BE PLACED AS ONE CONTINUOUS PIECE FROM END TO END OF THE STEEL EXTRUSION.

THE NEOPRENE GLAND SHALL CONFORM TO ASTM-2628 MODIFIED TO EXCLUDE RECOVER TEST AND COMPRESSION SET.

THE CONTRACTOR SHALL INSTALL THE GLAND ONLY WHEN THE DECK TEMPERATURE IS BETWEEN 45° F MINIMUM AND 90° F MAXIMUM, UNLESS OTHERWISE NOTED BY THE MANUFACTURER. THE DECK TEMPERATURE SHALL BE MEASURED BY RECORDING THE SURFACE TEMPERATURES ON THE UNDERSIDE OF THE DECK ADJACENT TO THE JOINTS. IF THE DECK TEMPERATURE DOES NOT FALL WITHIN THE SPECIFIED TEMPERATURE RANGE BEFORE THE CONTRACTOR HAS COMPLETED ALL OTHER REQUIRED WORK, IT WILL BE NECESSARY FOR THE CONTRACTOR TO RETURN TO THE PROJECT SITE TO COMPLETE INSTALLATION AND TESTING OF THE NEOPRENE GLAND. IF THE CONTRACTOR IS REQUIRED TO RETURN TO THE PROJECT SITE AFTER ALL OTHER REQUIRED WORK HAS BEEN COMPLETED, THE CONTRACTOR SHALL COMPLETE INSTALLATION AND TESTING OF NEOPRENE GLAND AT NO EXTRA CHARGE TO THE STATE.

THE NUMBER OF FEET OF NEOPRENE GLAND INSTALLED SHALL BE PAID FOR AT THE CONTRACT PRICE PER FOOT BASED ON PLAN QUANTITIES. THE PRICE FOR "NEOPRENE GLAND INSTALLATION AND TESTING" SHALL BE FULL COMPENSATION FOR INSTALLING AND TESTING OF THE NEW NEOPRENE GLAND. THIS WORK WILL CONSIST OF CLEANING THE EXTRUSION, INSTALLATION OF THE NEOPRENE GLAND AND WATER TIGHT TESTING OF THE EXPANSION JOINT SYSTEM. ALL WORK AND MATERIALS NECESSARY FOR THE INSTALLATION OF THE NEOPRENE GLAND SHALL COMPLY WITH THE RECOMMENDATIONS OF THE EXPANSION JOINT MANUFACTURER. THE PRICE BID FOR "NEOPRENE GLAND INSTALLATION AND TESTING" SHALL INCLUDE ALL WATERTIGHT INTEGRITY TESTING, LEAK REPAIRS AS DIRECTED BY THE ENGINEER, AND SUBSEQUENT WATERTIGHT TESTING UNTIL A LEAK FREE INSTALLATION IS ACHIEVED.

WATERTIGHT INTEGRITY TESTING AND REPAIR NOTES:

AFTER INSTALLATION OF EACH NEOPRENE GLAND, THE CONTRACTOR SHALL PERFORM WATERTIGHT INTEGRITY TESTS AT THE DECK LEVEL TO DETECT ANY LEAKAGE. THE TESTS ARE TO CHECK FOR LEAKAGE AT THE UPTURNED ENDS OF THE EXPANSION DEVICE AND FOR LEAKAGE ALONG THE EXPANSION DEVICE ACROSS THE DECK AND ANY MEDIANS OR SIDEWALKS. THE CONTRACTOR MAY CONDUCT A SINGLE TEST OF THE ENTIRE DEVICE INCLUDING UPTURNED ENDS OR MAY CONDUCT SEPARATE TESTS OF UPTURNED ENDS AND ONE OR MORE TESTS OF OVERLAPPING LENGTHS BETWEEN THE UPTURNED ENDS.

AT EACH UPTURNED END OF THE EXPANSION DEVICE, THE CONTRACTOR SHALL BLOCK OUT ON THE DECK AT LEAST 3 FEET OF THE EXPANSION DEVICE LEADING TO THE UPTURNED END AND FLOOD THE AREA. A MINIMUM WATER DEPTH OF 3" SHALL BE MAINTAINED AT THE GUTTERLINE FOR AT LEAST 30 MINUTES. DURING THE TEST, THE INSPECTOR SHALL OBSERVE FOR ANY OVERFLOW AT THE UPTURNED END. AT THE CONCLUSION OF THE TEST THE INSPECTOR WILL EXAMINE THE UNDERSIDE OF THE JOINT FOR LEAKAGE. THE EXPANSION DEVICE IS CONSIDERED WATERTIGHT IF THE INSPECTOR OBSERVES NO OVERFLOW DURING THE TEST AND IF NO DRIPPING WATER OR WATER DROPLETS ARE VISIBLE IN THE UNDERDECK AREAS NEAR THE UPTURNED END.

THE CONTRACTOR SHALL TEST THE EXPANSION DEVICE BETWEEN UPTURNED ENDS BY BLOCKING OUT AND COVERING THE DEVICE WITH PONDED OR FLOWING WATER TO A DEPTH OF AT LEAST 1" AT ALL POINTS, FOR AT LEAST 30 MINUTES. VERTICAL CURB SURFACES MAY BE TESTED WITH AN UNNOZZLED HOSE DELIVERING APPROXIMATELY ONE GALLON PER MINUTE DIRECTED TO FLOW OVER THE ENTIRE CURB HEIGHT FOR 30 MINUTES. AT THE CONCLUSION OF THE TEST, THE INSPECTOR WILL EXAMINE THE UNDERSIDE OF THE JOINT FOR LEAKAGE. THE EXPANSION DEVICE IS CONSIDERED WATERTIGHT IF NO DRIPPING WATER OR WATER DROPLETS ARE VISIBLE IN THE UNDERDECK AREAS ALONG THE FULL LENGTH OF THE EXPANSION JOINT. DAMP CONCRETE THAT DOES NOT SHOW DRIPPING WATER OR WATER DROPLETS IS NOT CONSIDERED A SIGN OF LEAKAGE.

IF THE EXPANSION DEVICE LEAKS AT AN UPTURNED END OR ALONG ITS LENGTH, THE CONTRACTOR SHALL LOCATE THE LEAK(S) AND TAKE REPAIR MEASURES TO STOP THE LEAKAGE. THE REPAIR MEASURES SHALL BE AS RECOMMENDED BY THE MANUFACTURER AND APPROVED BY THE ENGINEER PRIOR TO BEGINNING CORRECTIVE WORK.

IF MEASURES TO ELIMINATE LEAKAGE ARE TAKEN, THE CONTRACTOR SHALL PERFORM SUBSEQUENT WATERTIGHT INTEGRITY TESTS SUBJECT TO THE SAME CONDITIONS AS THE ORIGINAL TEST.

DESIGN FOR VARIABLE SKEW (L.A.)

278'-8 x 40' CONTINUOUS WELDED GIRDER BRIDGE W/14' BIKE TRAIL

139'-4 END SPAN 139'-4 INTERIOR SPANS

EXPANSION DEVICE NOTES

STA. 3589+46.06, BASELINE U.S. 67 RAMP C TBD

SCOTT COUNTY

IOWA DEPARTMENT OF TRANSPORTATION - HIGHWAY DIVISION

DESIGN SHEET NO. 56 OF 64 FILE NO. 30253 DESIGN NO. 3608

benesch engineers · scientists · planners
Alfred Benesch & Company
205 North Michigan Avenue, Suite 2400
Chicago, Illinois 60601
312-565-0450 Job No. 10061

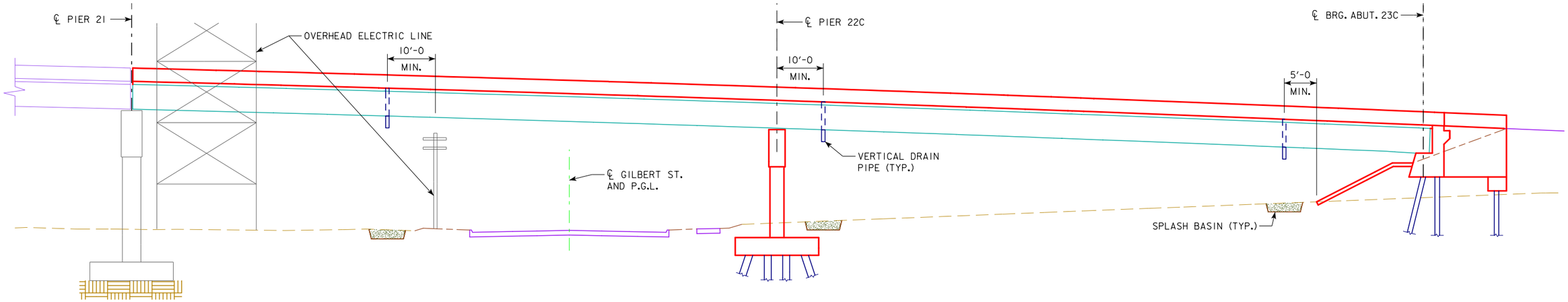

ELEVATION

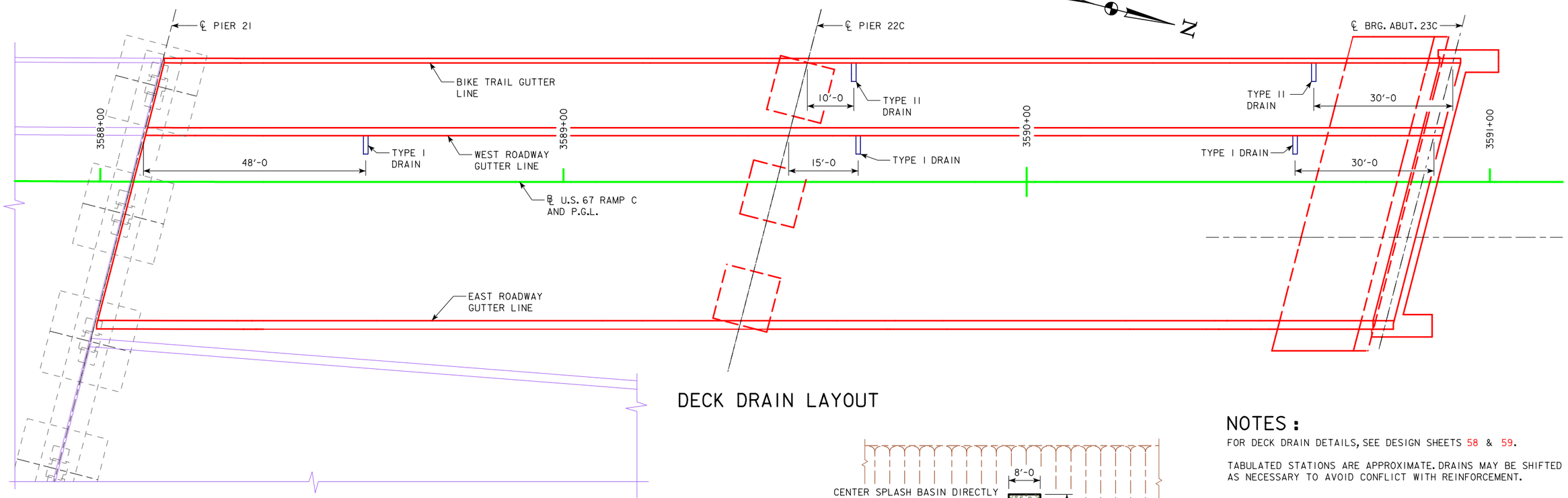

DECK DRAIN LAYOUT

NOTES:

FOR DECK DRAIN DETAILS, SEE DESIGN SHEETS 58 & 59.

TABULATED STATIONS ARE APPROXIMATE. DRAINS MAY BE SHIFTED AS NECESSARY TO AVOID CONFLICT WITH REINFORCEMENT.

SPLASH BASIN NOTES:

CENTER SPLASH BASIN DIRECTLY UNDER BRIDGE DRAIN.

THE COST OF FURNISHING AND PLACING THE SPLASH BASIN (INCLUDING EXCAVATION, EROSION STONE OR CLASS E REVETMENT, AND ENGINEERING FABRIC) IS TO BE INCLUDED IN THE PRICE BID FOR "DECK DRAINS". NO EXTRA PAYMENT WILL BE MADE. TOTAL NUMBER OF SPLASH BASINS = 5.

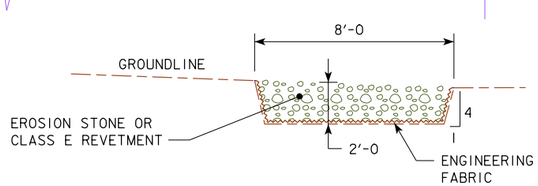

SPLASH BASIN UNDER BRIDGE DRAIN
TYPICAL SECTION FOR EXISTING GRADES

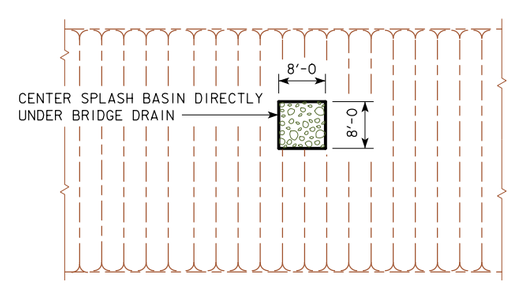

SPLASH BASIN UNDER BRIDGE DRAIN
PLAN VIEW

DESIGN FOR VARIABLE SKEW (L.A.)

278'-8 x 40' CONTINUOUS WELDED GIRDER BRIDGE W/14' BIKE TRAIL

139'-4 END SPAN 139'-4 INTERIOR SPANS

DECK DRAIN PLAN

STA. 3589+46.06, BASELINE U.S. 67 RAMP C TBD

SCOTT COUNTY

IOWA DEPARTMENT OF TRANSPORTATION - HIGHWAY DIVISION

DESIGN SHEET NO. 57 OF 64 FILE NO. 30253 DESIGN NO. 3608

benesch engineers · scientists · planners
Alfred Benesch & Company
205 North Michigan Avenue, Suite 2400
Chicago, Illinois 60601
312-565-0450 Job No. 10061

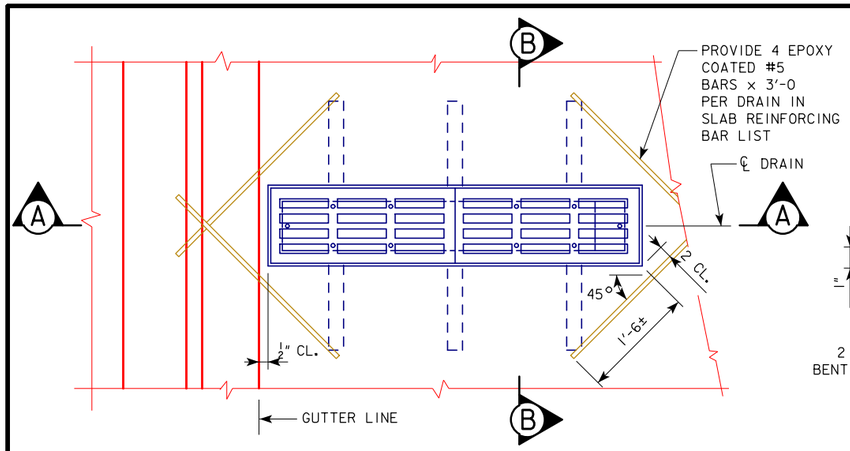

PART PLAN AT DRAIN

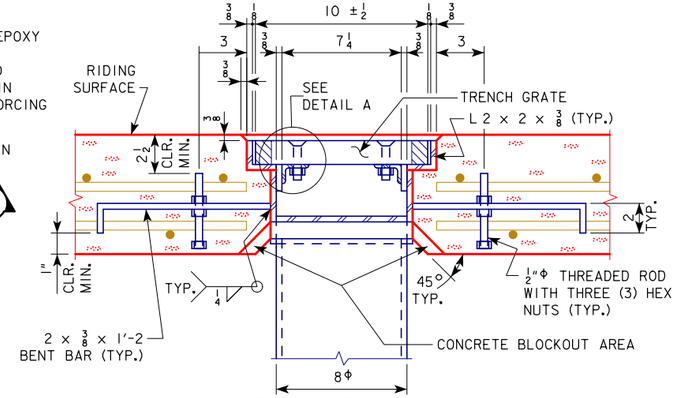

PART SECTION B-B

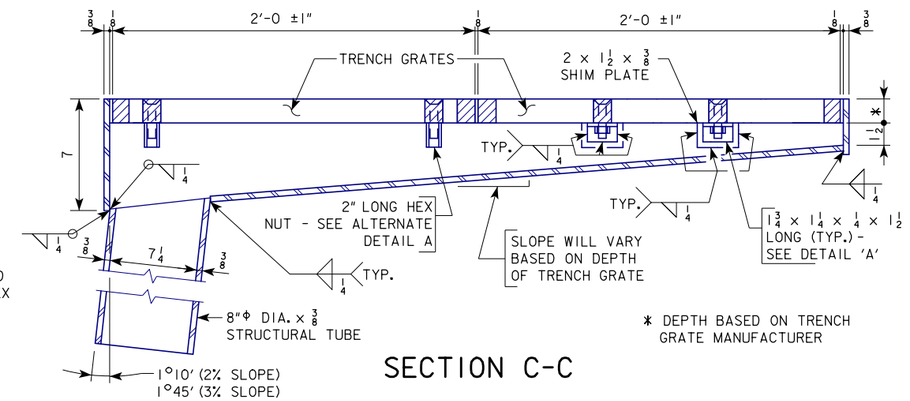

SECTION C-C

DRAIN NOTES

THE DRAINS SHALL BE 3/8 INCH THICK STEEL. THE DRAIN ASSEMBLIES SHALL BE GALVANIZED AFTER FABRICATION. THE 8" DIA. x 3/8" STRUCTURAL DRAIN TUBE MAY BE SUBSTITUTED WITH A 8" x 8" x 3/8" STRUCTURAL DRAIN TUBE. THE BID ITEM "DECK DRAIN" SHALL INCLUDE ALL COSTS ASSOCIATED WITH FABRICATING AND INSTALLING THE DECK DRAINS AS PER PLAN.

THE DRAIN TRENCH GRATES SHALL BE FERROUS CASTINGS. METAL USED IN THE MANUFACTURE OF CASTINGS SHALL CONFORM TO ASTM A48-83 CLASS 35B OR BETTER GRAY IRON CASTINGS COMPLYING WITH CURRENT IOWA D.O.T. STANDARD SPECIFICATIONS. FINISH OF CASTINGS SHALL BE SMOOTH AND FREE OF DEFECTS. TRENCH GRATES SHALL BE CAPABLE OF CARRYING AASHTO HL-93 LOADING. GALVANIZING OF THE TRENCH GRATES IS NOT REQUIRED.

DRAINS SHALL BE CENTERED OVER THE NEAREST BOTTOM TRANSVERSE SLAB REINFORCING BAR FROM THE LOCATION DESIGNATED ON THE SITUATION PLAN. THE BOTTOM TRANSVERSE SLAB REINFORCING BAR SHALL BE CUT OFF TO PROVIDE 1 1/2 INCH CLEARANCE FROM THE DRAIN. THE TOP TRANSVERSE SLAB REINFORCING BARS ON EACH SIDE OF THE DRAIN, SHALL BE SPACED AS NECESSARY TO PROVIDE 1 1/2 INCH CLEARANCE FROM THE DRAIN. LONGITUDINAL SLAB REINFORCING BARS THAT CONFLICT WITH THE DRAIN SHALL BE CUT OFF TO PROVIDE 2 INCH CLEARANCE FROM THE DRAIN. ALL CUT ENDS OF BARS SHALL BE COATED WITH EPOXY PATCHING MATERIAL SUPPLIED BY THE MANUFACTURER OF THE EPOXY COATING. LONGITUDINAL SLAB REINFORCING BARS SHALL BE SHIFTED AS NECESSARY TO ACCOMMODATE ANCHOR BARS.

MATERIALS

PLATES, BARS, THREADED RODS AND ANGLES SHALL MEET THE REQUIREMENTS ASTM A709 GRADE 36. THE TUBE STEEL SHALL MEET THE REQUIREMENTS ASTM A500 GRADE B.

3/8"Φ MECHANICALLY GALVANIZED STEEL SOCKET FLAT COUNTERSUNK HEAD CAP SCREW SHALL MEET THE REQUIREMENTS OF ASTM B695-04 (2009) AND ASTM F835-12.

3/8"Φ MECHANICALLY GALVANIZED STEEL HEX HEAD BOLT AND HEX NUT SHALL MEET THE REQUIREMENTS OF ASTM B695-04 (2009) AND ASTM A307-12 GRADE A.

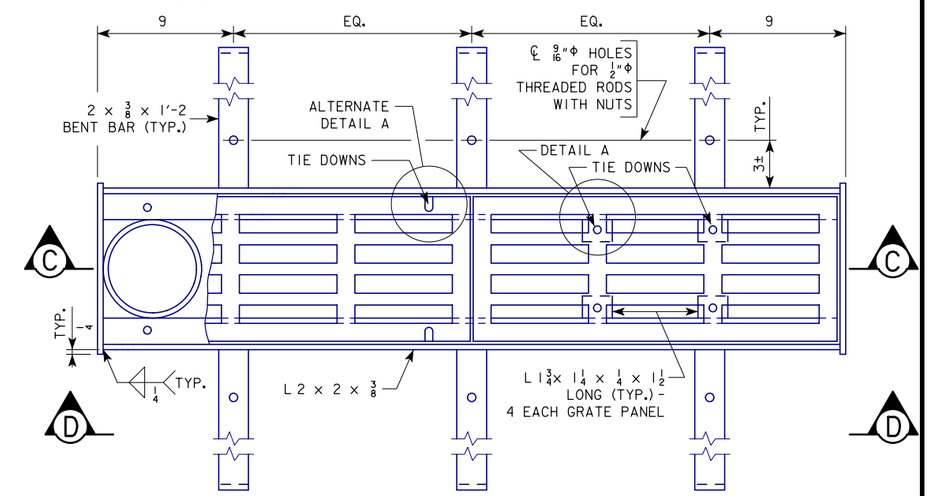

PLAN VIEW OF DRAIN TRENCH

(GRATE TIE DOWNS SHOW BOTH DETAIL A AND ALTERNATE DETAIL A)

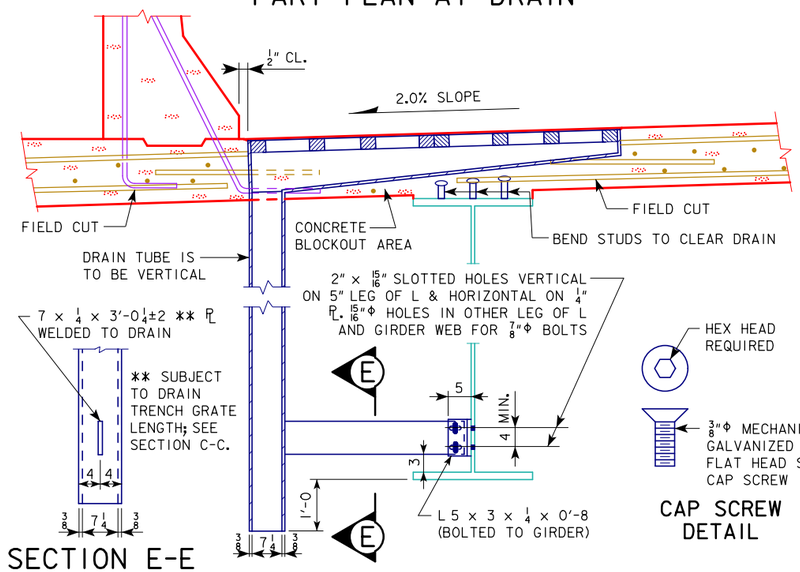

SECTION E-E

PART SECTION A-A

CAP SCREW DETAIL

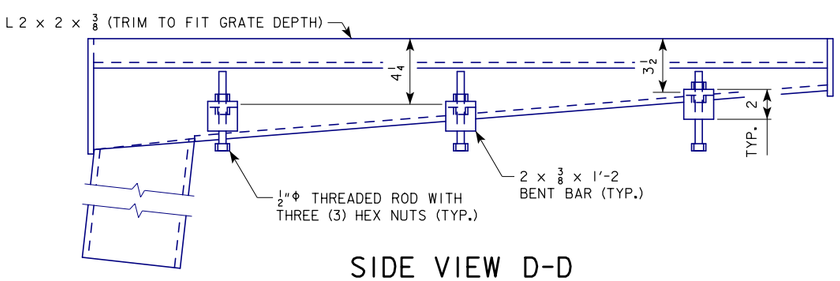

SIDE VIEW D-D

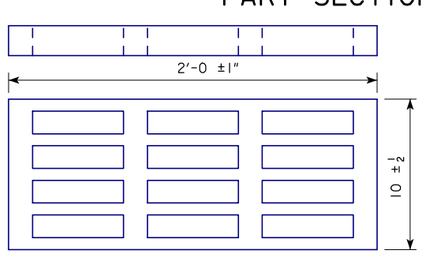

DRAIN TRENCH GRATE DETAILS

(2 GRATES REQUIRED PER DRAIN)

NOTE: PATTERN AND DIRECTION OF GRATE OPENINGS SHALL BE SIMILAR TO THE PATTERN SHOWN.

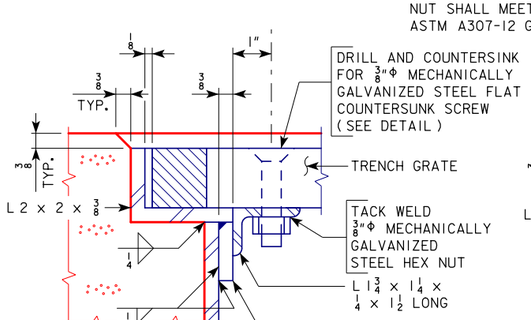

DETAIL A

(4 MOUNTING ANGLES PER GRATE PANEL)

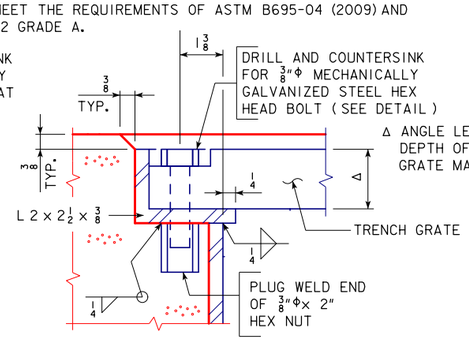

ALTERNATE DETAIL A

(4 PER GRATE PANEL)

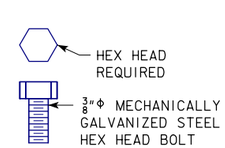

HEX HEAD BOLT DETAIL

(USED FOR ALTERNATE DETAIL A)

NOTE: 3 DRAINS REQUIRED.

DESIGN FOR VARIABLE SKEW (L.A.)

278'-8 x 40' CONTINUOUS WELDED GIRDER BRIDGE W/14' BIKE TRAIL

139'-4 END SPAN — 139'-4 INTERIOR SPANS

TYPE I DECK DRAIN DETAILS

STA. 3589+46.06, BASELINE U.S. 67 RAMP C — TBD

SCOTT COUNTY

IOWA DEPARTMENT OF TRANSPORTATION - HIGHWAY DIVISION

DESIGN SHEET NO. 58 OF 64 — FILE NO. 30253 — DESIGN NO. 3608

benesch engineers · scientists · planners
Alfred Benesch & Company
205 North Michigan Avenue, Suite 2400
Chicago, Illinois 60601
312-565-0450 Job No. 10061

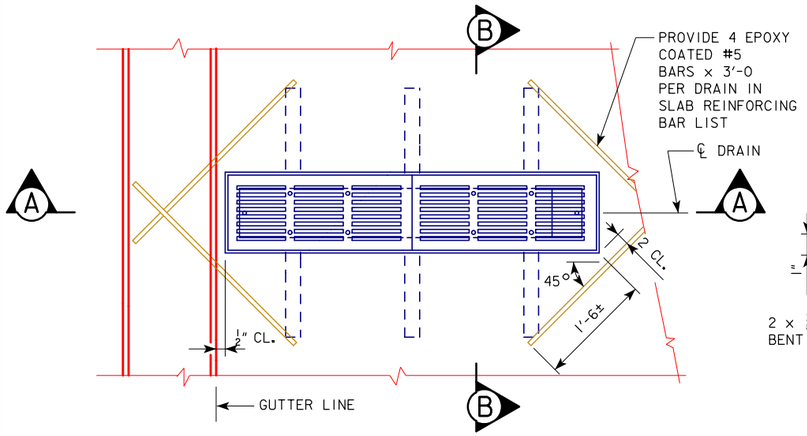

PART PLAN AT DRAIN

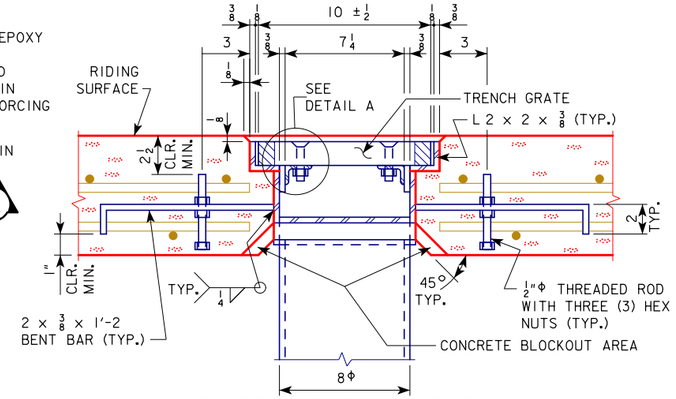

PART SECTION B-B

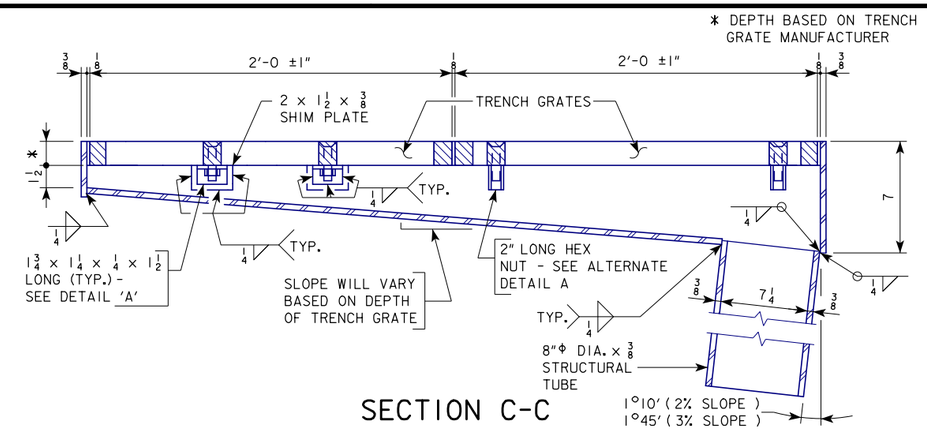

SECTION C-C

DRAIN NOTES

THE DRAINS SHALL BE 3/8 INCH THICK STEEL. THE DRAIN ASSEMBLIES SHALL BE GALVANIZED AFTER FABRICATION. THE 8" DIA. x 3/8" STRUCTURAL DRAIN TUBE MAY BE SUBSTITUTED WITH A 8" x 8" x 3/8" STRUCTURAL DRAIN TUBE. THE BID ITEM "DECK DRAIN" SHALL INCLUDE ALL COSTS ASSOCIATED WITH FABRICATING AND INSTALLING THE DECK DRAINS AS PER PLAN.

THE DRAIN TRENCH GRATES SHALL BE FERROUS CASTINGS. METAL USED IN THE MANUFACTURE OF CASTINGS SHALL CONFORM TO ASTM A48-83 CLASS 35B OR BETTER GRAY IRON CASTINGS COMPLYING WITH CURRENT IOWA D.O.T. STANDARD SPECIFICATIONS. FINISH OF CASTINGS SHALL BE SMOOTH AND FREE OF DEFECTS. TRENCH GRATES SHALL BE CAPABLE OF CARRYING AASHTO HL-93 LOADING. GALVANIZING OF THE TRENCH GRATES IS NOT REQUIRED.

DRAINS SHALL BE CENTERED OVER THE NEAREST BOTTOM TRANSVERSE SLAB REINFORCING BAR FROM THE LOCATION DESIGNATED ON THE SITUATION PLAN. THE BOTTOM TRANSVERSE SLAB REINFORCING BAR SHALL BE CUT OFF TO PROVIDE 1 1/2 INCH CLEARANCE FROM THE DRAIN. THE TOP TRANSVERSE SLAB REINFORCING BARS ON EACH SIDE OF THE DRAIN, SHALL BE SPACED AS NECESSARY TO PROVIDE 1 1/2 INCH CLEARANCE FROM THE DRAIN. LONGITUDINAL SLAB REINFORCING BARS THAT CONFLICT WITH THE DRAIN SHALL BE CUT OFF TO PROVIDE 2 INCH CLEARANCE FROM THE DRAIN. ALL CUT ENDS OF BARS SHALL BE COATED WITH EPOXY PATCHING MATERIAL SUPPLIED BY THE MANUFACTURER OF THE EPOXY COATING. LONGITUDINAL SLAB REINFORCING BARS SHALL BE SHIFTED AS NECESSARY TO ACCOMMODATE ANCHOR BARS.

MATERIALS

PLATES, BARS, THREADED RODS AND ANGLES SHALL MEET THE REQUIREMENTS ASTM A709 GRADE 36. THE TUBE STEEL SHALL MEET THE REQUIREMENTS ASTM A500 GRADE B.

3/8"Φ MECHANICALLY GALVANIZED STEEL SOCKET FLAT COUNTERSUNK HEAD CAP SCREW SHALL MEET THE REQUIREMENTS OF ASTM B695-04 (2009) AND ASTM F835-12.

3/8"Φ MECHANICALLY GALVANIZED STEEL HEX HEAD BOLT AND HEX NUT SHALL MEET THE REQUIREMENTS OF ASTM B695-04 (2009) AND ASTM A307-12 GRADE A.

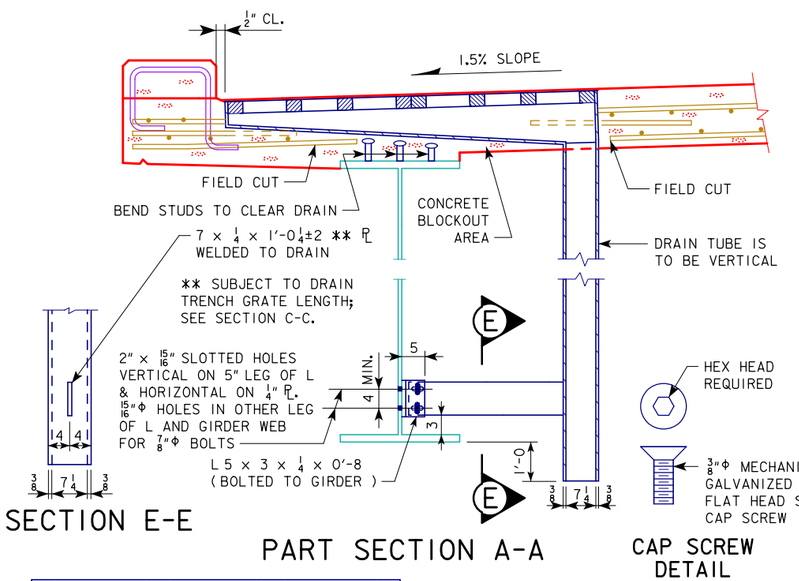

SECTION E-E

PART SECTION A-A

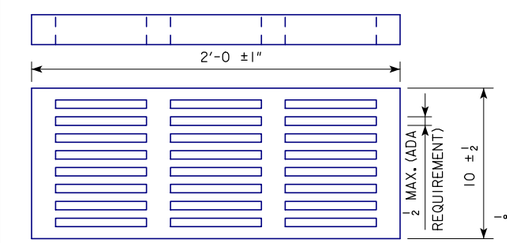

DRAIN TRENCH GRATE DETAILS

(2 GRATES REQUIRED PER DRAIN)

NOTE: PATTERN AND DIRECTION OF GRATE OPENINGS SHALL BE SIMILAR TO THE PATTERN SHOWN.

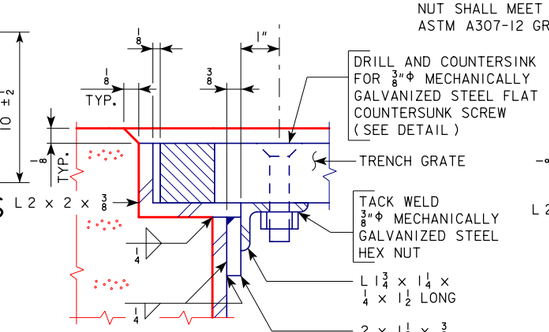

DETAIL A

(4 MOUNTING ANGLES PER GRATE PANEL)

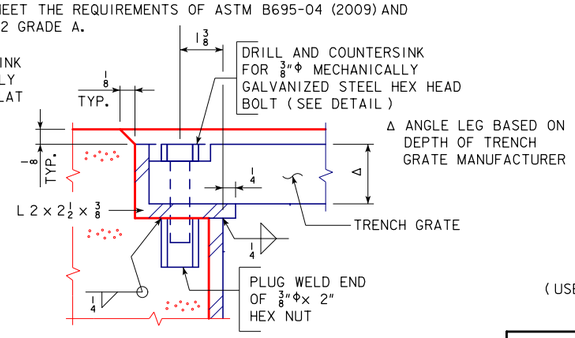

ALTERNATE DETAIL A

(4 PER GRATE PANEL)

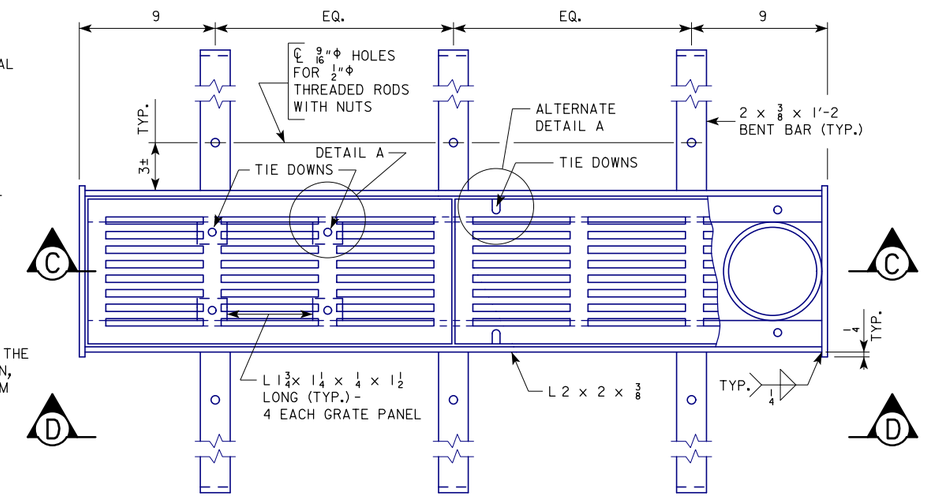

PLAN VIEW OF DRAIN TRENCH

(GRATE TIE DOWNS SHOW BOTH DETAIL A AND ALTERNATE DETAIL A)

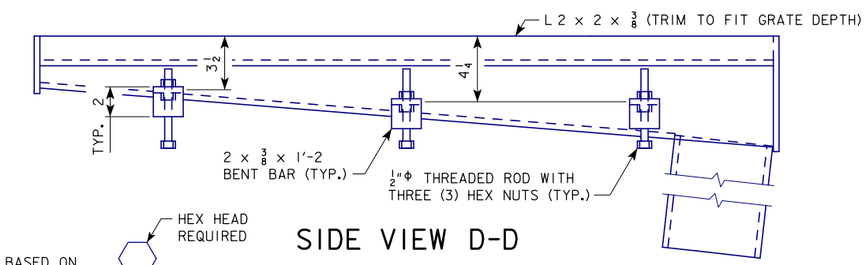

SIDE VIEW D-D

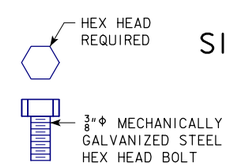

HEX HEAD BOLT DETAIL

(USED FOR ALTERNATE DETAIL A)

NOTE: 2 DRAINS REQUIRED.

Alfred Benesch & Company
205 North Michigan Avenue, Suite 2400
Chicago, Illinois 60601
312-565-0450 Job No. 10061

DESIGN FOR VARIABLE SKEW (L.A.)

278'-8 x 40' CONTINUOUS WELDED GIRDER BRIDGE W/14' BIKE TRAIL

139'-4 END SPAN 139'-4 INTERIOR SPANS

TYPE II DECK DRAIN DETAILS

STA. 3589+46.06, BASELINE U.S. 67 RAMP C TBD

SCOTT COUNTY

IOWA DEPARTMENT OF TRANSPORTATION - HIGHWAY DIVISION

DESIGN SHEET NO. 59 OF 64 FILE NO. 30253 DESIGN NO. 3608

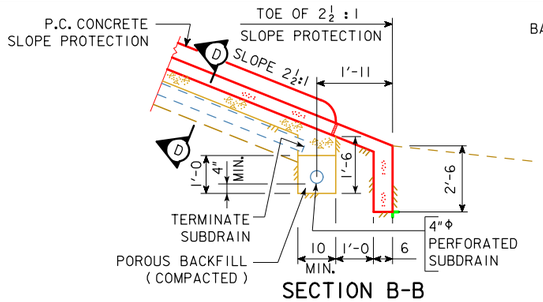

SECTION B-B

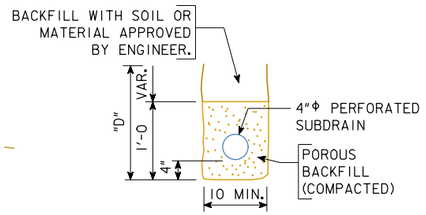

SECTION C-C
(TYPICAL)

"D" = DEPTH REQUIRED TO PROVIDE PROPER FLOW LINE FOR SUBDRAIN.

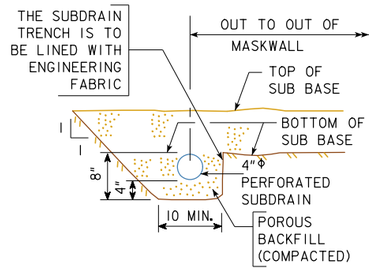

SECTION D-D
(TYPICAL)

BENCH MARK NO. 500: STA. 6781+18.92 LT. 161.19' ELEV. 575.797, CHISELED "X" IN BOLT E. SIDE CONCRETE STRUCTURE.

SUBDRAIN NOTES :

THIS PLAN SHEET SHOWS DETAILS FOR PLACING ALL SUBDRAINS AND SUBDRAIN OUTLETS REQUIRED FOR THIS STRUCTURE.

THE SUBDRAINS SHALL BE 4" IN DIAMETER AND SHALL BE IN ACCORDANCE WITH ARTICLE 4143.01, B, OF THE STANDARD SPECIFICATIONS. THE SUBDRAIN OUTLET SHALL CONSIST OF A 6'-0 LENGTH OF PIPE WITH A REMOVABLE RODENT GUARD AS DETAILED ON THIS SHEET.

THE COST OF FURNISHING AND PLACING SUBDRAIN (INCLUDING EXCAVATION), FLOODABLE BACKFILL, POROUS BACKFILL, AND SUBDRAIN OUTLET IS TO BE INCLUDED IN THE PRICE BID FOR "HIGH PERFORMANCE STRUCTURAL CONCRETE". NO EXTRA PAYMENT WILL BE MADE.

THE DIMENSIONS SHOWN FOR THE PROPOSED SUBDRAINS ARE BASED ON THE PROPOSED GRADING LAYOUT OF BRIDGE BERMS. THE DIMENSIONS SHOWN ARE FOR ESTIMATING ONLY. REQUIRED LENGTHS AND GENERAL LOCATIONS OF SUBDRAINS ARE SUBJECT TO CHANGE DUE TO FIELD ADJUSTMENTS OF THE GRADING LAYOUT.

THE UPHILL END OF THE PERFORATED SUBDRAIN AT THE TOE OF SLOPE PROTECTION SHALL BE CAPPED AS APPROVED BY THE ENGINEER.

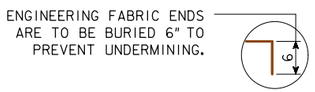

ENGINEERING FABRIC DETAIL

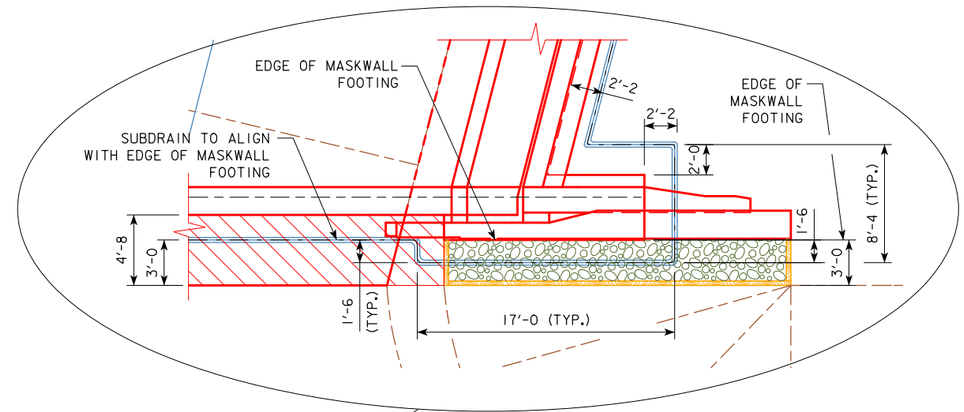

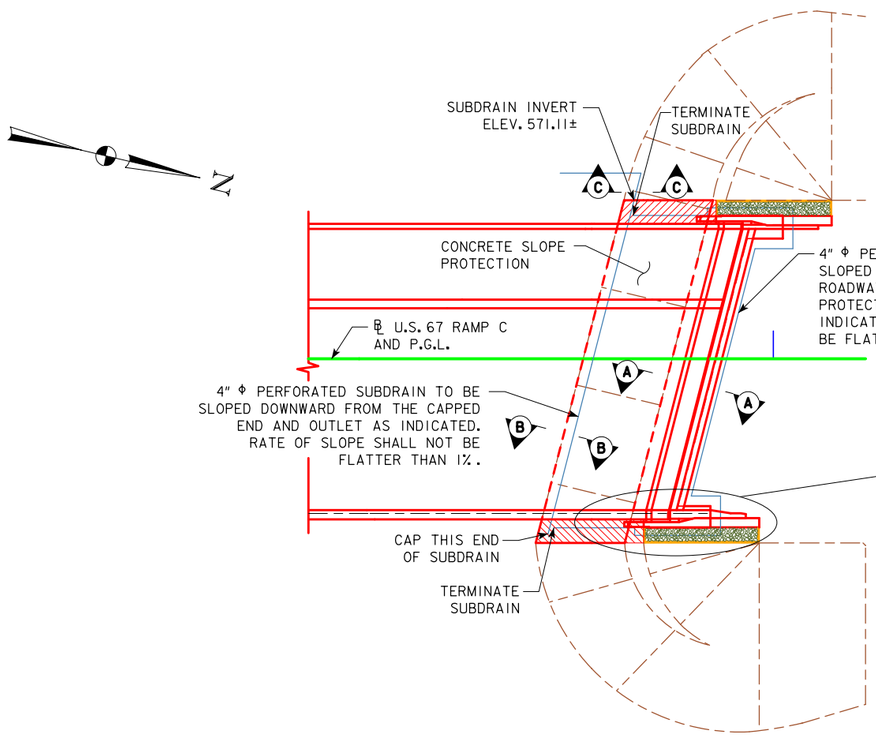

SITUATION PLAN
SHOWING SUBDRAIN LOCATIONS

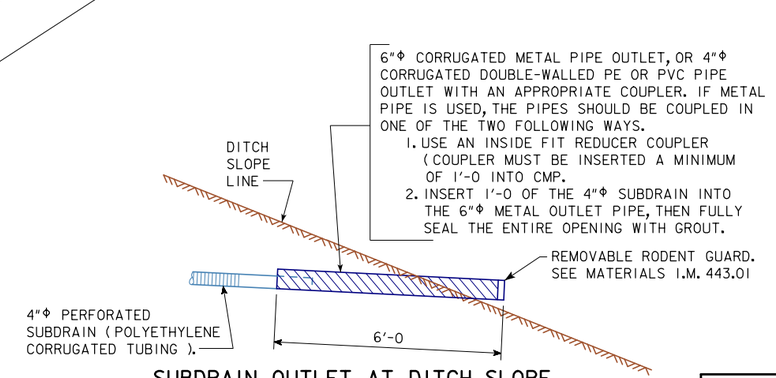

SUBDRAIN OUTLET AT DITCH SLOPE

NOTE:
SECTION A-A IS SHOWN ON DESIGN SHEET 63.

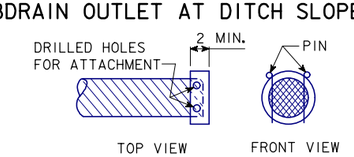

REMOVABLE RODENT GUARD DETAILS

OUTLET DETAILS

DESIGN FOR VARIABLE SKEW (L.A.)

278'-8 × 40' CONTINUOUS WELDED GIRDER BRIDGE W/14' BIKE TRAIL

139'-4 END SPAN 139'-4 INTERIOR SPANS

SUBDRAIN DETAILS

STA. 3589+46.06, BASELINE U.S. 67 RAMP C TBD

SCOTT COUNTY

IOWA DEPARTMENT OF TRANSPORTATION - HIGHWAY DIVISION

DESIGN SHEET NO. 60 OF 64 FILE NO. 30253 DESIGN NO. 3608

benesch engineers · scientists · planners
Alfred Benesch & Company
205 North Michigan Avenue, Suite 2400
Chicago, Illinois 60601
312-565-0450 Job No. 10061

2:28:29 PM untitled c:\pwise_work\do_not_delete\dms05641\82074200.brg
MODEL: $MODEL

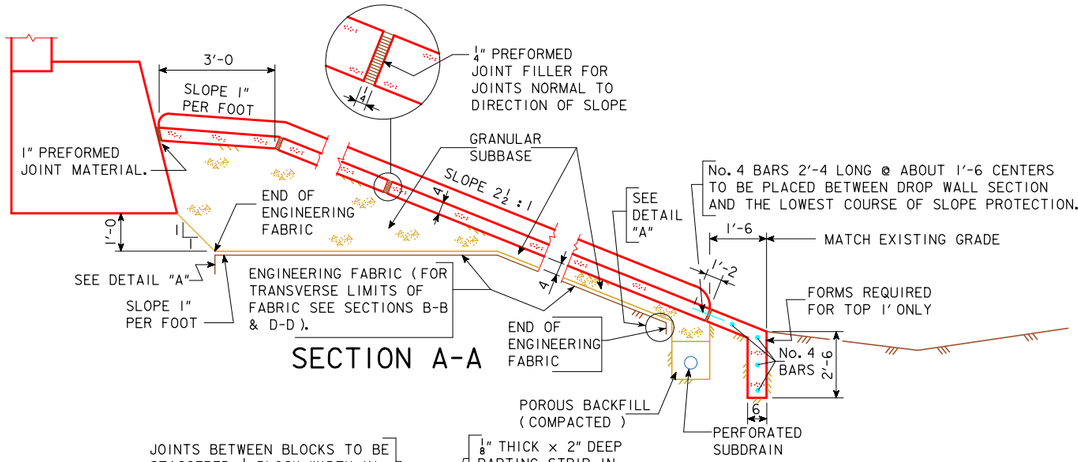

SECTION A-A

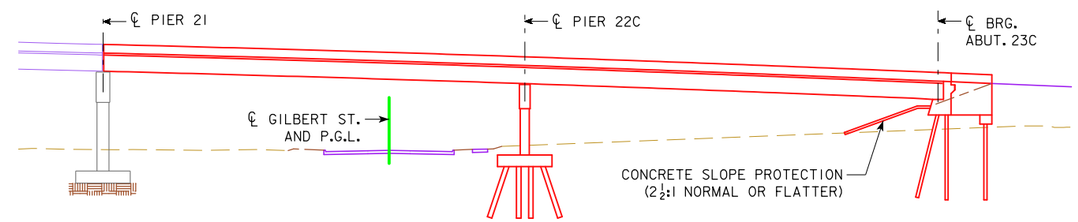

LONGITUDINAL SECTION ALONG ℄ U.S. 67 RAMP C

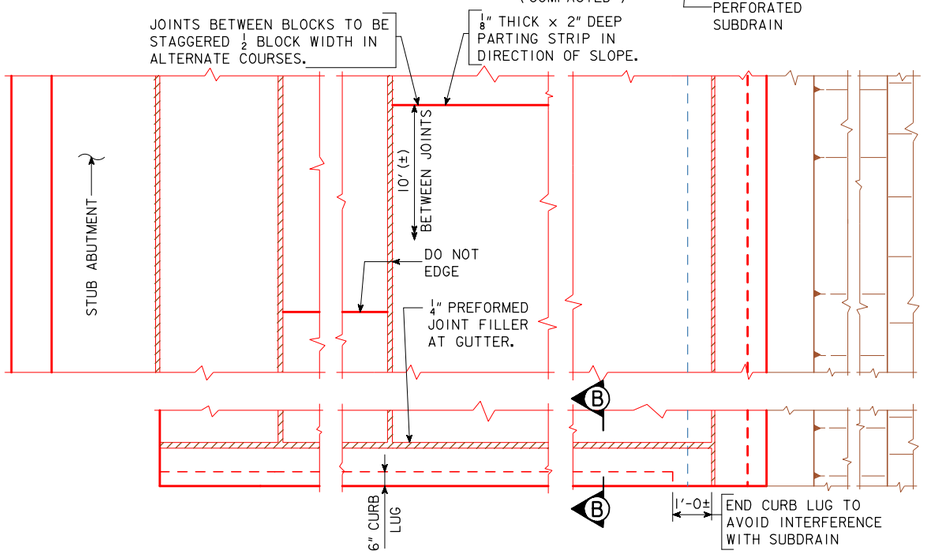

PART SLOPE PROTECTION PLAN

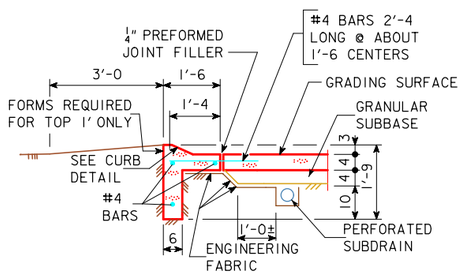

SECTION B-B
(THROUGH 4" THICK GRANULAR SUBBASE)

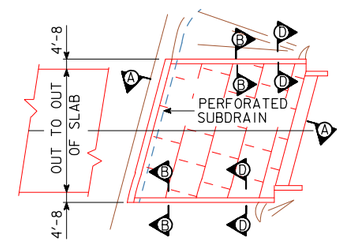

SLOPE PROTECTION LAYOUT

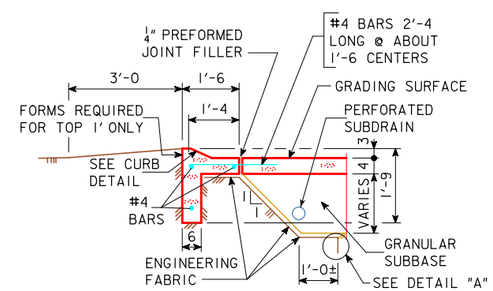

SECTION D-D
(THROUGH VARIABLE THICKNESS GRANULAR SUBBASE)

ESTIMATED QUANTITIES

DESCRIPTION	LOCATION	QUANTITY
CONCRETE SLOPE PROTECTION	ABUT. NO. 23C	166 SQ.YDS.
	TOTAL	166 SQ.YDS.

ITEMS TO BE INCLUDED IN "CONCRETE SLOPE PROTECTION":
- ENGINEERING FABRIC
- GRANULAR SUBBASE
- CLASS "C" STRUCTURAL CONCRETE
- #4 REINFORCING
- PREFORMED JOINT FILLER
- EXCAVATION, SHAPING AND COMPACTING

ENGINEERING FABRIC ENDS ARE TO BE BURIED 6" TO PREVENT UNDERMINING.

DETAIL "A"

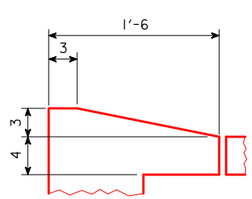

CURB DETAIL

GENERAL NOTES:

THIS PLAN SHEET SHOWS DETAILS FOR PLACING A PORTLAND CEMENT CONCRETE SLOPE PROTECTION UNDER OVERHEAD STRUCTURES.

THE CURRENT SPECIFICATIONS OF THE IOWA DEPARTMENT OF TRANSPORTATION SHALL APPLY WITH MODIFICATIONS OR ADDITIONS LISTED BELOW :

FINISH - CLASS 1, FLOATED SURFACE FINISH.

CURE - CURE AS PER CURRENT SPECIFICATIONS.

GRANULAR SUBBASE - THIS PREWETTED MATERIAL SHALL BE DEPOSITED BY A METHOD APPROVED BY THE ENGINEER AND BE THOROUGHLY TAMPED OR VIBRATED TO INSURE COMPACTION. FINISHED SHAPE SHALL BE AS SHOWN IN SECTION A-A.

FORESLOPE PREPARATION - THE BRIDGE BERM FORESLOPE SHALL BE COMPACTED AND SHAPED AS SHOWN IN SECTION A-A ON THIS SHEET. THE BERM FORESLOPE SHALL BE FIRM WHEN THE ENGINEERING FABRIC AND GRANULAR SUBBASE ARE PLACED.

ENGINEERING FABRIC SHALL BE IN ACCORDANCE WITH ARTICLE 4196.01, B, 2, OF THE STANDARD SPECIFICATIONS.

IF THE ENGINEERING FABRIC IS LAPPED, THE LAPS SHALL BE A MINIMUM OF ONE FOOT IN LENGTH, SHINGLE FASHION WITH UP SLOPE LAP PIECE ON TOP AND STAPLED FOR CONTINUITY.

THE CAST IN PLACE CONCRETE IS TO BE POURED IN APPROXIMATELY 10' WIDE COURSES, BUT ALL COURSES ON ONE SLOPE SHOULD HAVE APPROXIMATELY EQUAL WIDTHS. ADJACENT COURSES SHALL NOT BE POURED WITHIN 15 HOURS OF ONE ANOTHER. THE JOINTS IN THE DIRECTION OF THE SLOPE ARE TO BE STAGGERED ABOUT 1/2 BLOCK WIDTH.

PAYMENT FOR "CONCRETE SLOPE PROTECTION" WILL BE MADE ON A SQUARE YARD BASIS FOR SLOPE PROTECTION CONSTRUCTED. THE UNIT PRICE BID PER SQUARE YARD IS TO INCLUDE COSTS OF ALL MATERIALS AND LABOR REQUIRED TO CONSTRUCT THE SLOPE PROTECTION AS SHOWN ON THESE PLANS. THE DISPOSAL OF EXCESS SOIL FROM SHAPING OR TRENCHING, AS DIRECTED BY THE ENGINEER, SHALL BE CONSIDERED INCIDENTAL TO PLACING THE CONCRETE SLOPE PROTECTION.

WHERE EROSION CONTROL WORK IS COMPLETED THE CONTRACTOR SHALL BE RESPONSIBLE FOR ANY PLANT MATERIALS DESTROYED ADJACENT TO SLOPE PROTECTION AREA. THE CONTRACTOR SHALL REPLANT, RESEED AND REMULCH ALL AREAS IN ACCORDANCE WITH SECTION 2601, OF THE STANDARD SPECIFICATIONS, AT HIS EXPENSE.

THE BRIDGE CONTRACTOR IS TO INSTALL SUBDRAINS AS DETAILED ON DESIGN SHEET 60.

DESIGN FOR VARIABLE SKEW (L.A.)

278'-8 x 40' CONTINUOUS WELDED GIRDER BRIDGE W/14' BIKE TRAIL

139'-4 END SPAN 139'-4 INTERIOR SPANS

CONCRETE SLOPE PROTECTION

STA. 3589+46.06, BASELINE U.S. 67 RAMP C TBD

SCOTT COUNTY

IOWA DEPARTMENT OF TRANSPORTATION - HIGHWAY DIVISION

DESIGN SHEET NO. 61 OF 64 FILE NO. 30253 DESIGN NO. 3608

benesch engineers · scientists · planners
Alfred Benesch & Company
205 North Michigan Avenue, Suite 2400
Chicago, Illinois 60601
312-565-0450 Job No. 10061

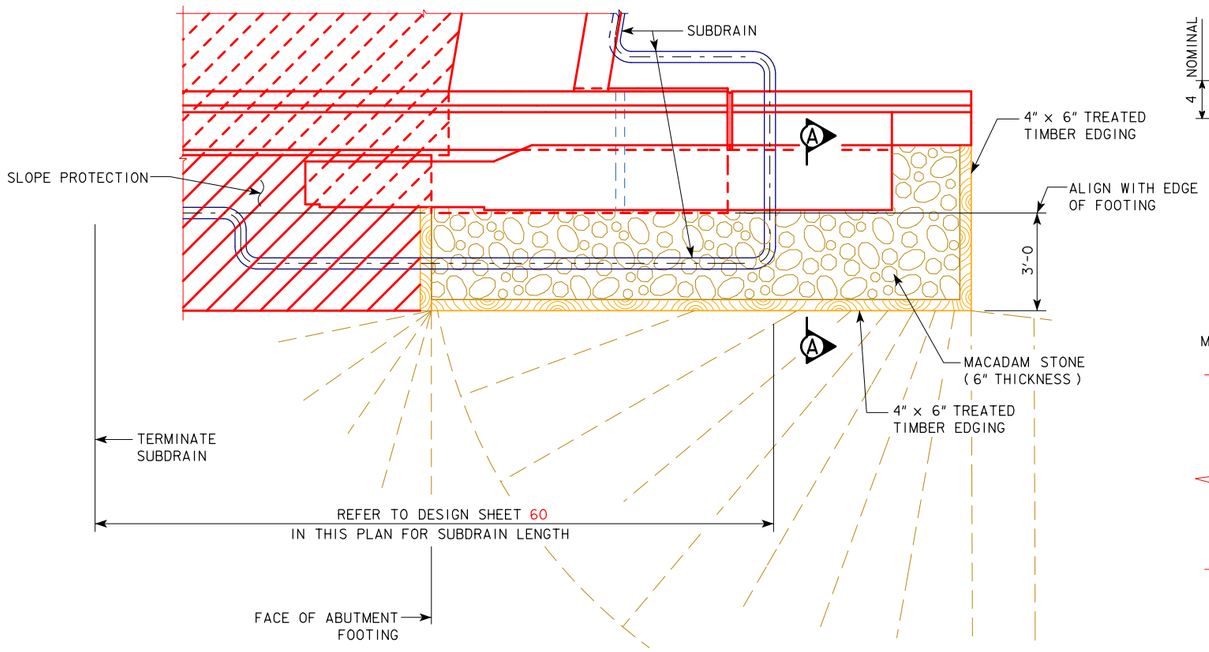

TOP VIEW OF WING ARMORING WITH WING EXTENSION

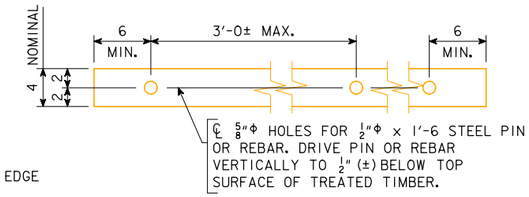

4" x 6" TREATED TIMBER EDGING DETAILS

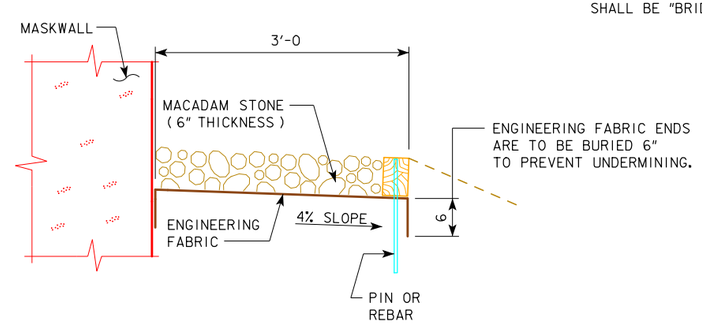

SECTION A-A

GENERAL NOTES:

MACADAM STONE SHALL BE PLACED ALONG THE SIDE OF THE MASKWALL FOOTING AS SHOWN IN SECTION A-A. THIS IS TYPICAL AT EACH CORNER OF THE ABUTMENT UNLESS OTHERWISE NOTED IN THE PLANS. THE MACADAM STONE AT THESE LOCATIONS SHALL BE UNDERLAYED WITH ENGINEERING FABRIC IN ACCORDANCE WITH ARTICLE 4196.01, B, 3, OF THE STANDARD SPECIFICATIONS.

THE MACADAM STONE SHALL BE IN ACCORDANCE WITH SECTION 4122, OF THE STANDARD SPECIFICATIONS, COARSE MATERIAL (NO CHOKE STONE IS ALLOWED).

WOOD PRESERVATIVE TREATMENT FOR THE TIMBER EDGING SHALL MEET THE REQUIREMENTS FOR GUARDRAIL POSTS, SAWED FOUR SIDES, IN ACCORDANCE WITH SECTION 4161, OF THE STANDARD SPECIFICATIONS.

THE MACADAM STONE SHALL BE DEPOSITED, SPREAD, CONSOLIDATED AND SHAPED BY MECHANICAL OR HAND METHODS THAT WILL PROVIDE UNIFORM 6" DEPTH AND DENSITY AND PROVIDE UNIFORM SURFACE APPEARANCE.

PAYMENT FOR THE BRIDGE WING ARMORING SHALL BE BID PER SQUARE YARD. COST WILL INCLUDE ENGINEERING FABRIC, MACADAM STONE, TREATED TIMBER EDGING, EXCAVATION, SHAPING, AND COMPACTION TO DIMENSIONS SHOWN IN THESE PLANS. BID ITEM SHALL BE "BRIDGE WING ARMORING - MACADAM STONE".

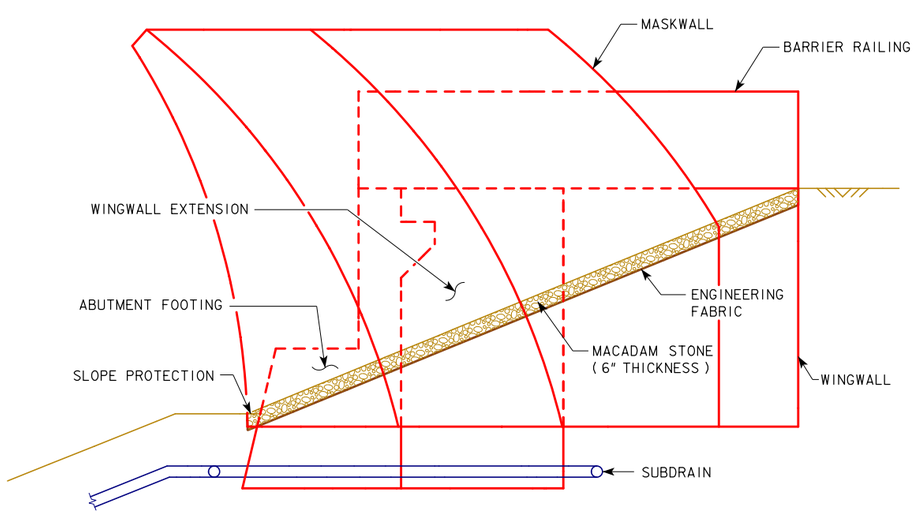

PROFILE VIEW OF WING ARMORING WITH MASKWALL

NE QUADRANT SHOWN
NW QUADRANT OPPOSITE HAND
(SUPERSTRUCTURE NOT SHOWN)

ESTIMATED QUANTITIES

DESCRIPTION	LOCATION	QUANTITY
BRIDGE WING ARMORING-MACADAM STONE	ABUT. NO. 23C	14 SQ.YDS.
	TOTAL	14 SQ.YDS.

ITEMS TO BE INCLUDED IN "BRIDGE WING ARMORING-MACADAM STONE":
- ENGINEERING FABRIC
- MACADAM STONE
- TREATED TIMBER EDGING
- EXCAVATION, SHAPING AND COMPACTING

DESIGN FOR VARIABLE SKEW (L.A.)

278'-8 x 40' CONTINUOUS WELDED GIRDER BRIDGE W/14' BIKE TRAIL

139'-4 END SPAN 139'-4 INTERIOR SPANS

BRIDGE WING ARMORING

STA. 3589+46.06, BASELINE U.S. 67 RAMP C TBD

SCOTT COUNTY

IOWA DEPARTMENT OF TRANSPORTATION - HIGHWAY DIVISION

DESIGN SHEET NO. 62 OF 64 FILE NO. 30253 DESIGN NO. 3608

benesch engineers · scientists · planners
Alfred Benesch & Company
205 North Michigan Avenue, Suite 2400
Chicago, Illinois 60601
312-565-0450 Job No. 10061

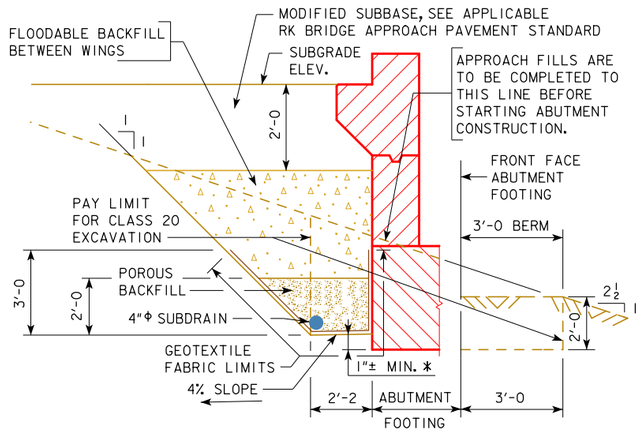

SECTION A-A

BACKFILL DETAILS

NOTE: GEOTEXTILE FABRIC WILL BE ATTACHED TO FACE OF ABUTMENT FOOTING AND WINGS.

* DIMENSION VARIES DUE TO 2% SUBDRAIN SLOPE.

NOTE:

SUBDRAIN SHALL SLOPE DOWNWARD 2% FROM MIDPOINT OF ABUTMENT WHEN OUTLETTING BOTH SIDES OF THE ABUTMENT.

NOTE:
SEE DESIGN SHEET 60 FOR DETAILS NOT SHOWN ON THIS SHEET WHICH ARE PERTINENT TO THIS STRUCTURE.

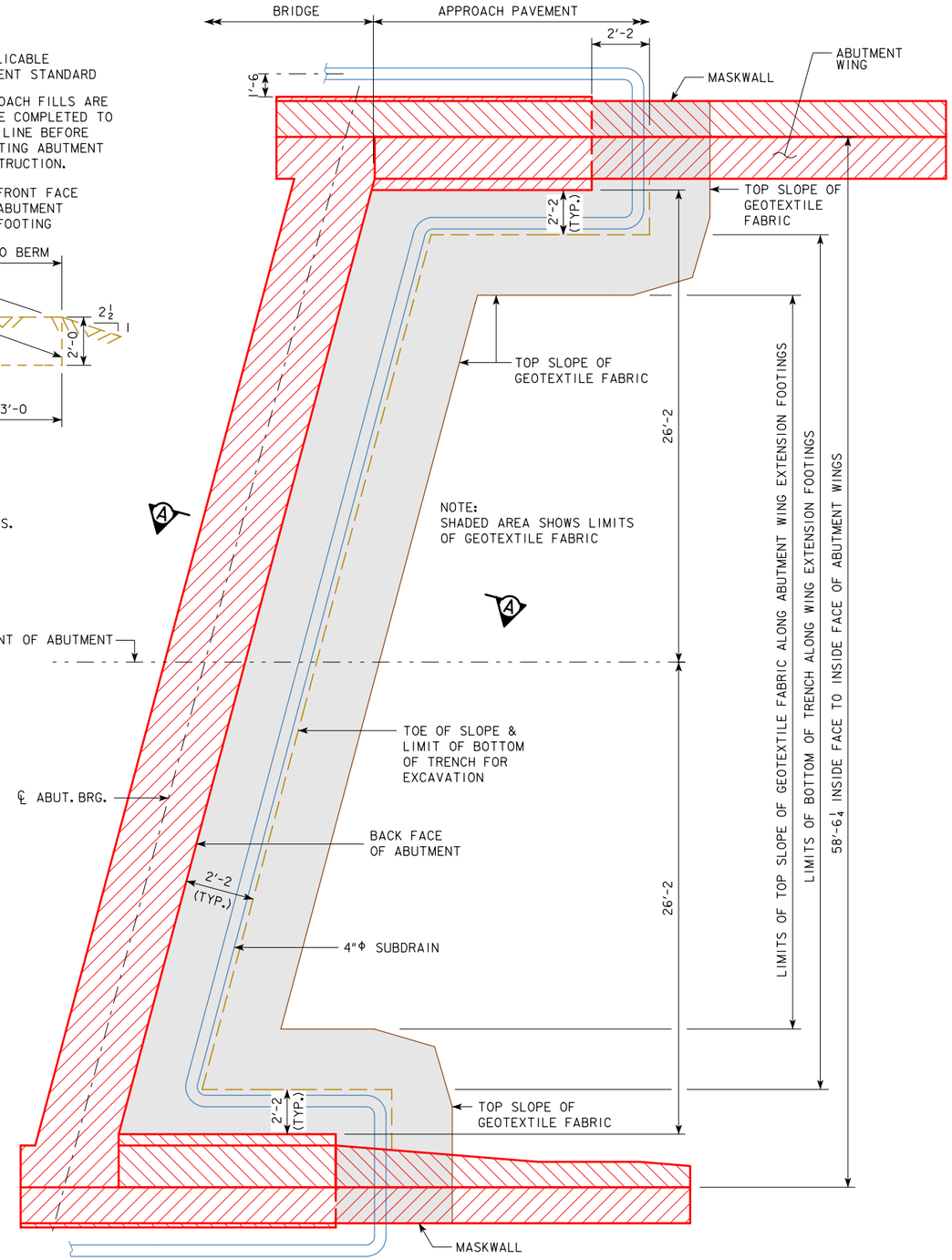

ABUTMENT PLAN WITH WING EXTENSIONS

TECHNICAL DATA INFORMATION - GEOTEXTILE FABRIC				
MECHANICAL PROPERTIES	TEST METHOD	UNIT	MINIMUM AVERAGE ROLL VALUE	
			MD	CD
TENSILE STRENGTH (AT 5% STRAIN)	ASTM D 4595	kN/m (LBS/FT)	19.8 (1356)	19.8 (1356)
APPARENT OPENING SIZE (AOS)	ASTM D 4751	mm (U.S. SIEVE)	0.43 MAX (#40)	
FLOW RATE	ASTM D 4491	L/MIN/m² (GAL/MIN/FT²)	733 (18)	
UV RESISTANCE (AT 500 HOURS)	ASTM D 4355	% STRENGTH RETAINED	70	

ABUTMENT BACKFILL PROCESS:

THE BASE OF THE EXCAVATION SUBGRADE BEHIND THE ABUTMENT IS TO BE GRADED WITH A 4% SLOPE AWAY FROM THE ABUTMENT FOOTING AND A 2% CROSS SLOPE IN THE DIRECTION OF THE SUBDRAIN OUTLET. THIS EXCAVATION SHAPING IS TO BE DONE PRIOR TO BEGINNING INSTALLATION OF THE GEOTEXTILE AND BACKFILL MATERIAL.

AFTER THE SUBGRADE HAS BEEN SHAPED, THE GEOTEXTILE FABRIC SHALL BE INSTALLED IN ACCORDANCE WITH THE DETAILS SHOWN. THE FABRIC IS INTENDED TO BE INSTALLED IN THE BASE OF THE EXCAVATION AND EXTENDED VERTICALLY UP THE ABUTMENT BACKWALL, ABUTMENT WING WALLS, AND EXCAVATION FACE TO A HEIGHT THAT WILL BE APPROXIMATELY 1 TO 2 FOOT HIGHER THAN THE HEIGHT OF THE POROUS BACKFILL PLACEMENT AS SHOWN IN THE "BACKFILL DETAILS" ON THIS SHEET. THE STRIPS OF THE FABRIC PLACED SHALL OVERLAP APPROXIMATELY 1 FOOT AND SHALL BE PINNED IN PLACE. THE FABRIC SHALL BE ATTACHED TO THE ABUTMENT BY USING LATH FOLDED IN THE FABRIC AND SECURED TO THE CONCRETE WITH SHALLOW CONCRETE NAILS. THE FABRIC PLACED AGAINST THE EXCAVATION FACE SHALL BE PINNED.

WHEN THE FABRIC IS IN PLACE, THE SUBDRAIN SHALL BE INSTALLED DIRECTLY ON THE FABRIC AT THE TOE OF THE REAR EXCAVATION SLOPE. A SLOT WILL NEED TO BE CUT IN THE FABRIC AT THE POINT WHERE THE SUBDRAIN EXITS THE FABRIC NEAR THE END OF THE ABUTMENT WING WALL.

POROUS BACKFILL IS THEN PLACED AND LEVELED, NO COMPACTION IS REQUIRED.

THE REMAINING WORK INVOLVES BACKFILLING WITH FLOODABLE BACKFILL, SURFACE FLOODING, AND VIBRATORY COMPACTION. THE FLOODABLE BACKFILL MATERIAL SHALL BE IN ACCORDANCE WITH THE STANDARD SPECIFICATIONS. THE FLOODABLE BACKFILL SHALL BE PLACED IN INDIVIDUAL LIFTS, SURFACE FLOODED, AND COMPACTED WITH VIBRATORY COMPACTION TO ENSURE FULL CONSOLIDATION. LIMIT THE LOOSE LIFTS TO NO MORE THAN 2 FEET OF THICKNESS.

START SURFACE FLOODING FOR EACH FLOODABLE BACKFILL LIFT AT THE HIGH POINT OF THE SUBDRAIN AND PROGRESS TO THE LOW POINT WHERE THE SUBDRAIN EXITS THE FABRIC. TO ENSURE UNIFORM SURFACE FLOODING, WATER RUNNING FULL IN A 2-INCH DIAMETER HOSE SHOULD BE SPRAYED IN SUCCESSIVE 6-FOOT TO 8-FOOT INCREMENTS FOR 3 MINUTES WITHIN EACH INCREMENT.

FLOODABLE BACKFILL LIFT PLACEMENT, FLOODING, AND COMPACTION SHALL PROGRESS UNTIL THE REQUIRED FULL THICKNESS OF THE ABUTMENT BACKFILL HAS BEEN COMPLETED.

WATER REQUIRED FOR FLOODING, SUBDRAINS, POROUS BACKFILL, FLOODABLE BACKFILL, AND GEOTEXTILE FABRIC FURNISHED AT THE BRIDGE ABUTMENTS WILL NOT BE MEASURED SEPARATELY FOR PAYMENT.

THE COST OF WATER REQUIRED FOR FLOODING, SUBDRAINS, POROUS BACKFILL, FLOODABLE BACKFILL, AND GEOTEXTILE FABRIC FURNISHED AT THE BRIDGE ABUTMENTS SHALL BE INCLUDED IN THE CONTRACT UNIT PRICE BID FOR HIGH PERFORMANCE STRUCTURAL CONCRETE.

benesch
engineers · scientists · planners
Alfred Benesch & Company
205 North Michigan Avenue, Suite 2400
Chicago, Illinois 60601
312-565-0450 Job No. 10061

DESIGN FOR VARIABLE SKEW (L.A.)

278'-8 x 40' CONTINUOUS WELDED GIRDER BRIDGE W/14' BIKE TRAIL

139'-4 END SPAN 139'-4 INTERIOR SPANS

ABUTMENT BACKFILL DETAILS

STA. 3589+46.06, BASELINE U.S. 67 RAMP C TBD

SCOTT COUNTY

IOWA DEPARTMENT OF TRANSPORTATION - HIGHWAY DIVISION

DESIGN SHEET NO. 63 OF 64 FILE NO. 30253 DESIGN NO. 3608

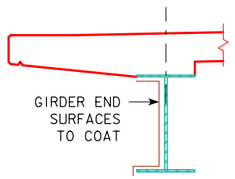

SECTION A-A

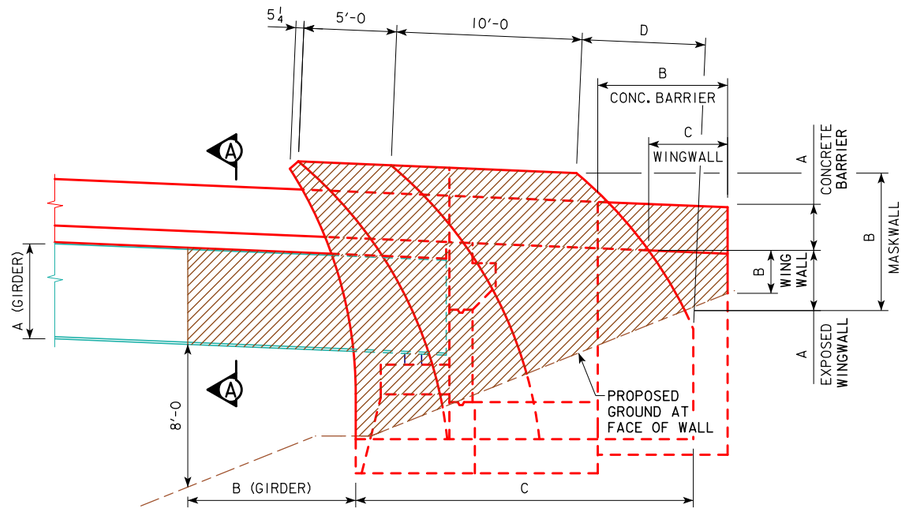

MASKWALL, WINGWALL, AND
CONCRETE BARRIER ELEVATION

ANTI-GRAFFITI COATING SCHEDULE

SURFACE TYPE	LOCATION	DIMENSIONS **					REFERENCE DESIGN SHEET NUMBERS	QUANTITY
		A	B	C	D	E		SY
MASKWALL	RAMP C NE	14'-11 5/8	7'-4 7/8	18'-2 3/8	6'-7 7/8	1'-4	13, 14	25
	RAMP C NW	13'-8 5/8	6'-4 3/8	17'-8 5/8	6'-1 1/2	1'-3 1/4	15, 16	22
WINGWALL, EXPOSED	RAMP C NE	3'-2 7/8	2'-3 3/4	4'-3 1/8			11	1
	RAMP C NW	2'-6 1/2	1'-4 3/4	4'-6 1/8			12	1
CONCRETE BARRIER	RAMP C NE	2'-5 7/8	6'-6 3/8				40, 41	2
PIER COLUMN	RAMP C PIER 22C		2'-10	2'-10	4'-2	S,E,W *	5-7	32
GIRDER ENDS	RAMP C NE	5'-1 3/8	9'-9 1/4				3, 20	8
	RAMP C NW	5'-1 3/8	13'-4 5/8				3, 21	10
							TOTAL (SQ. YD.)	101

* PIER FACES TO BE COATED
** DIMENSIONS ARE APPROXIMATE. PLAN QUANTITIES ARE CALCULATED GRAPHICALLY IN CADD.

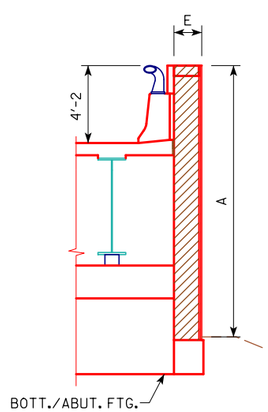

MASKWALL
END VIEW

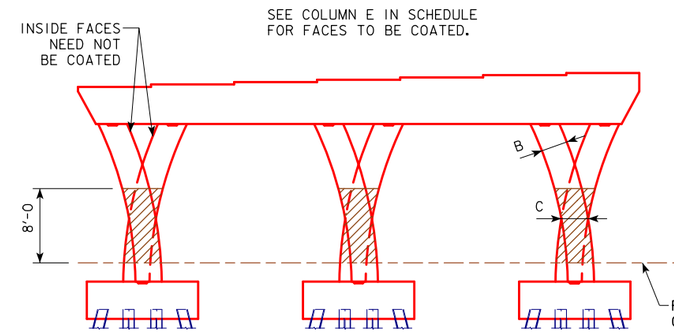

PIER COLUMNS ELEVATION

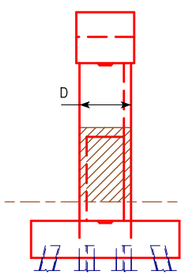

PIER COLUMN
END VIEW

ANTI-GRAFFITI COATING

NOTE:

ANTI-GRAFFITI SURFACE PREPARATION AND APPLICATION SHALL BE IN ACCORDANCE WITH THE "SPECIAL PROVISIONS FOR ANTI-GRAFFITI COATING". THE MATERIAL USED SHALL BE AN APPROVED TYPE IN ACCORDANCE WITH MATERIALS I.M. 491.23. ANTI-GRAFFITI COATING SHALL BE APPLIED TO SURFACES LISTED IN THE SCHEDULE AND TO THE LIMITS INDICATED IN THESE PLANS.

DESIGN FOR VARIABLE SKEW (L.A.)

278'-8 x 40' CONTINUOUS WELDED GIRDER BRIDGE W/14' BIKE TRAIL

139'-4 END SPAN 139'-4 INTERIOR SPANS

ANTI-GRAFFITI COATING

STA. 3589+46.06, BASELINE U.S. 67 RAMP C TBD

SCOTT COUNTY

IOWA DEPARTMENT OF TRANSPORTATION - HIGHWAY DIVISION

DESIGN SHEET NO. 64 OF 64 FILE NO. 30253 DESIGN NO. 3608

benesch engineers · scientists · planners
Alfred Benesch & Company
205 North Michigan Avenue, Suite 2400
Chicago, Illinois 60601
312-565-0450 Job No. 10061

2:28:57 PM untitled c:\pwise_work\do_not_delete\dms05641\82074200.brg
MODEL: $MODEL

DESIGN FOR VARIABLE SKEW (L.A.)

278'-8 x 40' CONTINUOUS WELDED GIRDER BRIDGE W/14' BIKE TRAIL

139'-4 END SPAN 139'-4 INTERIOR SPANS

SOIL PROFILE SHEET

STA. 3589+46.06, BASELINE U.S. 67 RAMP C TBD

SCOTT COUNTY

IOWA DEPARTMENT OF TRANSPORTATION - HIGHWAY DIVISION

DESIGN SHEET NO. 1 OF 1 FILE NO. 30253 DESIGN NO. 3608

GEOTECHNICAL DESIGN

I hereby certify that this engineering document was prepared by me or under my direct personal supervision and that I am a duly licensed Professional Engineer under the laws of the State of Iowa.

LICENSED PROFESSIONAL ENGINEER Kipkoech K. Chepkoit 18405 IOWA

Signature Date

Kipkoech K. Chepkoit

Printed or Typed Name

My license renewal date is December 31, 2014

Pages or sheets covered by this seal: SPS. 7

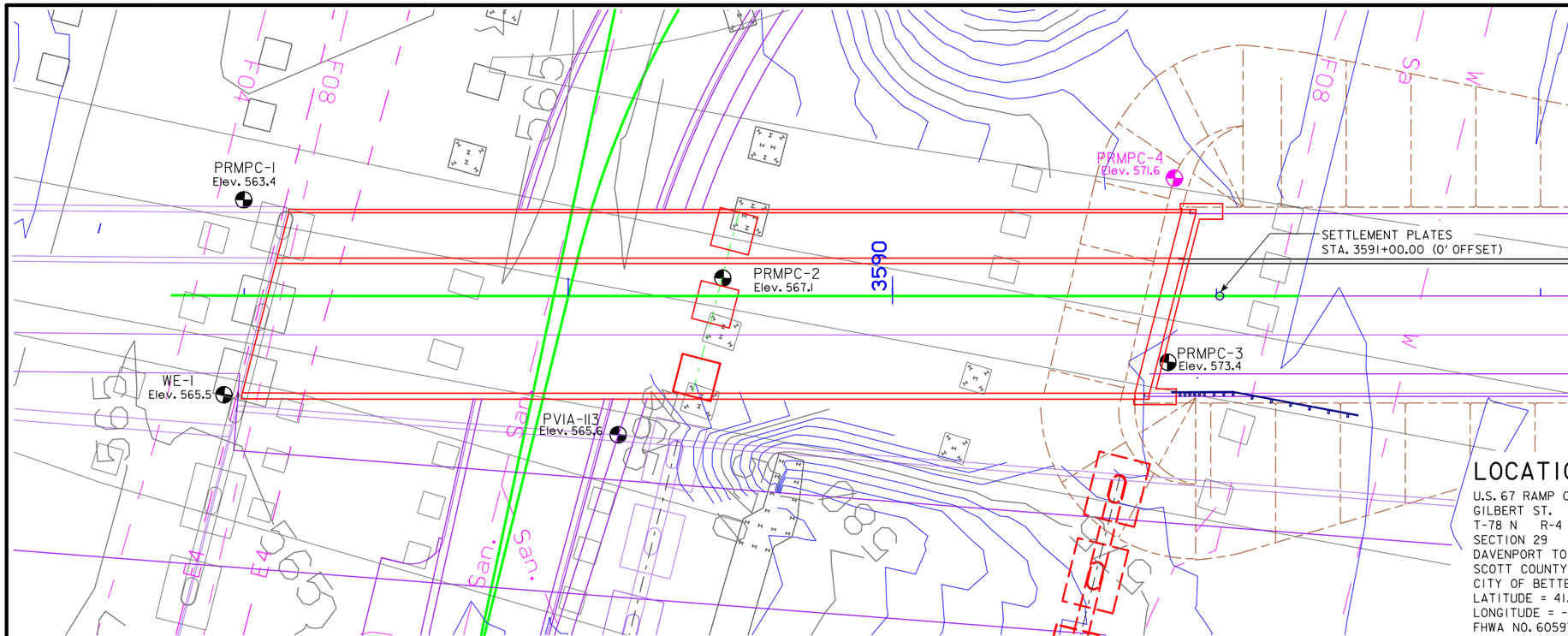

LOCATION

U.S. 67 RAMP C OVER
GILBERT ST.
T-78 N R-4 E
SECTION 29
DAVENPORT TOWNSHIP
SCOTT COUNTY
CITY OF BETTENDORF
LATITUDE = 41.524582
LONGITUDE = -90.513404
FHWA NO. 605976

N

THIS SHEET IS INCLUDED TO SHOW SOIL BORING INFORMATION ONLY. DETAILS AND NOTES SHOWN ELSEWHERE IN THESE PLANS SHALL BE USED FOR CONSTRUCTION.

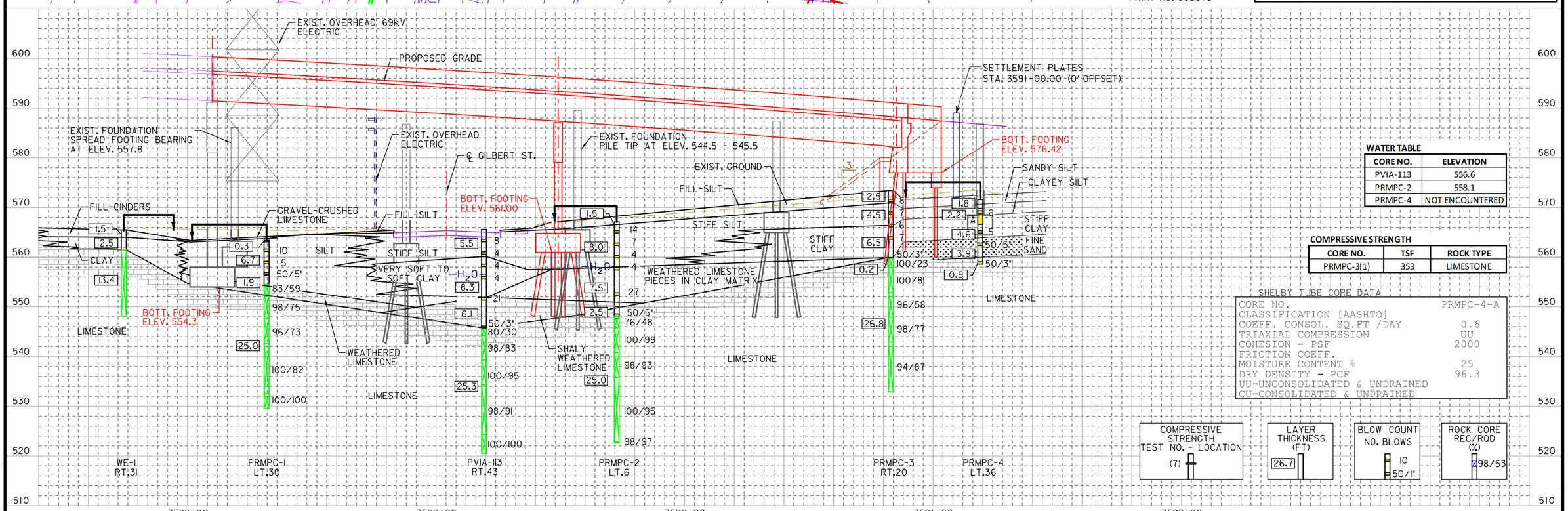

WATER TABLE

CORE NO.	ELEVATION
PVIA-113	556.6
PRMPC-2	558.1
PRMPC-4	NOT ENCOUNTERED

COMPRESSIVE STRENGTH

CORE NO.	TSF	ROCK TYPE
PRMPC-3(1)	353	LIMESTONE

SHELBY TUBE CORE DATA

CORE NO.	PRMPC-4-A
CLASSIFICATION [AASHTO]	
COEFF. CONSOL. SQ.FT /DAY	0.6
TRIAXIAL COMPRESSION	UU
COHESION - PSF	2000
FRICTION COEFF.	
MOISTURE CONTENT %	25
DRY DENSITY - PCF	96.3

UU-UNCONSOLIDATED & UNDRAINED
CU-CONSOLIDATED & UNDRAINED

COMPRESSIVE STRENGTH TEST NO. - LOCATION (7)

LAYER THICKNESS (FT) 26.7

BLOW COUNT NO. BLOWS 10 50/1"

ROCK CORE REC/RQD (%) 98/53

DESIGN TEAM KKC/SAS/KKC	SCOTT COUNTY	PROJECT NUMBER BRFIM-074-1(200)5--05-82	SHEET NUMBER SPS. 7

2:29:04 PM untitled c:\pwise_work\do_not_delete\dms05641\82074200.brg
MODEL: $MODEL

ESTIMATED BRIDGE QUANTITIES

ITEM NO.	ITEM CODE	ITEM	UNIT	TOTAL	AS BUILT QUANTITY
1	2402-2720000	EXCAVATION, CLASS 20	CY	137	
2	2403-0100010	STRUCTURAL CONCRETE (BRIDGE)	CY	7.9	
3	2403-7000210	HIGH PERFORMANCE STRUCTURAL CONCRETE	CY	304.0	
4	2404-7775000	REINFORCING STEEL	LB	289	
5	2404-7775005	REINFORCING STEEL, EPOXY COATED	LB	70601	
6	2404-7775009	REINFORCING STEEL, STAINLESS STEEL	LB	2580	
7	2408-7800000	STRUCTURAL STEEL	LB	351441	
8	2414-6424110	CONCRETE BARRIER RAILING	LF	329.8	
9	2414-6625502	STRUCTURAL STEEL RAILING, TRAFFIC	LF	304.8	
10	2501-0201057	PILES, STEEL, HP 10 X 57	LF	855	
11	2507-2638610	CONCRETE SLOPE PROTECTION	SY	479	
12	2507-2638660	BRIDGE WING ARMORING - MACADAM STONE	SY	17.0	
13	2526-8285000	CONSTRUCTION SURVEY	LS	1.0	
14	2533-4980005	MOBILIZATION	LS	1.0	
15	2599-9999009	CORING	LF	93.0	
16	2599-9999018	ANTI-GRAFFITI COATING	SY	79	

ESTIMATED REFERENCE INFORMATION

ITEM NO.	DESCRIPTION
2	INCLUDES CONCRETE FOR THE WINGWALLS.
3	INCLUDES CONCRETE FOR THE DECK SLAB, ABUTMENTS, ABUTMENT DIAPHRAGMS AND MASKWALLS. REFER TO THE DEVELOPMENTAL SPECIFICATIONS FOR "HIGH PERFORMANCE CONCRETE FOR STRUCTURES" FOR ADDITIONAL INFORMATION. INCLUDES FURNISHING AND PLACING 3 INCH DIAMETER PVC PLASTIC PIPE AND EXPANDING FOAM IN THE ABUTMENT WINGS AND MASKWALLS. INCLUDES FURNISHING AND PLACING SUBDRAIN (INCLUDING EXCAVATION), FLOODABLE BACKFILL AT ABUT. 31A, NON-FLOODABLE BACKFILL AT ABUT. 32A, POROUS BACKFILL, GEOTEXTILE FABRIC, WATER FLOODING, AND SUBDRAIN OUTLET AT ABUTMENTS AND TOE OF BERM.
6	INCLUDES 48 STAINLESS STEEL COUPLING NUTS FOR THREADED NO. 5 REBAR. ALL VERTICAL BARRIER RAIL REINFORCING STEEL WHICH EXTENDS FROM THE DECK OR THE ABUTMENT WINGWALLS AND ALL HORIZONTAL REINFORCING STEEL THAT CONNECTS THE MASKWALL TO OTHER STRUCTURAL ELEMENTS SHALL BE DEFORMED BAR GRADE 60, TYPE 304, 316L OR 316LN IN ACCORDANCE WITH ASTM A955/A955M-11. STAINLESS STEEL REINFORCING BARS AND COUPLING NUTS SHALL MEET THE REQUIREMENTS OF MATERIALS IM 451 APPENDIX E, EXCEPT THAT THE BAR AND COUPLING NUT MATERIAL SHALL BE TYPE 304, 316L OR 316LN, IN ACCORDANCE WITH ASTM A955/M955-11.
7	INCLUDES S3x7.5 ABUTMENT BEARING MATERIAL. INCLUDES ALL COSTS ASSOCIATED WITH FLUOROPOLYMER PAINT SYSTEM IN ACCORDANCE WITH THE SPECIAL PROVISIONS FOR "FLUOROPOLYMER PAINT FOR STRUCTURAL STEEL".
8	IF PLACEMENT OF CONCRETE IS DONE BY SLIPFORMING METHOD, CLASS BR CONCRETE IS REQUIRED. CAST-IN-PLACE BARRIER RAILS SHALL USE HIGH PERFORMANCE CONCRETE. PRICE BID FOR THIS ITEM SHALL INCLUDE THE COST OF CAST-IN-PLACE FORMS IF REQUIRED FOR PLACEMENT OF THE CONCRETE. INCLUDES 662 FT OF 2" DIAMETER AND 8 FT OF 1" DIAMETER RIGID STEEL CONDUIT. INCLUDES MATERIAL AND LABOR ASSOCIATED WITH PROVIDING AND INSTALLING RIGID STEEL CONDUIT, JUNCTION BOXES AND FITTINGS. INCLUDES 0.8 C.Y. OF CONCRETE FOR THE LIGHT POLE BLISTERS. INCLUDES ANCHOR BOLTS AND PLATES AT LIGHT POLE BASES.
9	REFER TO THE DEVELOPMENTAL SPECIFICATIONS FOR "INSTALLING ADHESIVE-BONDED ANCHORS AND DOWELS FOR TRAFFIC RAILINGS" FOR ADDITIONAL INFORMATION.
10	INCLUDES FURNISHING AND INSTALLING STEEL PILE POINTS AT BOTH ABUTMENTS.
11	INCLUDES FURNISHING AND PLACING ENGINEERING FABRIC, GRANULAR SUBBASE, REINFORCING STEEL, STRUCTURAL CONCRETE, PREFORMED EXPANSION JOINT FILLER, AND ALL REQUIRED EXCAVATING, SHAPING AND COMPACTING.
12	INCLUDES FURNISHING AND PLACING ENGINEERING FABRIC, MACADAM STONE, 4" x 6" TREATED TIMBERS, $\frac{1}{2}$" DIAMETER STEEL PINS (OR REBARS), AND ALL REQUIRED EXCAVATING, SHAPING, AND COMPACTING FOR WING ARMORING.
15	THE QUANTITY OF "CORING" IS BASED ON THE ANTICIPATED TOP OF ROCK ELEVATION. THE NUMBER OF LINEAL FEET OF "CORING" WILL BE MEASURED IN THE FIELD AND PAID FOR AT THE UNIT CONTRACT PRICE BID PER LINEAL FOOT. THE PRICE BID INCLUDES THE COST OF PREDRILLING 18" DIA. HOLES THROUGH SOIL FROM THE BOTTOM OF FOOTING ELEVATION AT ABUTMENT 31A & 32A TO THE TOP OF ROCK AND THE COST OF PREDRILLING 18" DIA. AND 14" DIA. SOCKETS INTO BEDROCK. THIS ITEM ALSO INCLUDES THE COST OF DISPOSAL OF EXCAVATED MATERIAL, MAINTAINING THE OPEN HOLES, FURNISHING AND PLACING CLASS "C" STRUCTURAL CONCRETE TO BACKFILL THE SOCKET TO THE REQUIRED ELEVATION, FURNISHING AND PLACING GRANULAR BACKFILL IF APPLICABLE, AND FURNISHING AND BACKFILLING WITH BENTONITE SLURRY.
16	REFER TO THE SPECIAL PROVISIONS FOR "ANTI-GRAFFITI COATING" FOR ADDITIONAL INFORMATION.

INDEX OF SHEETS

SHEET DESCRIPTIONS	SHEET NUMBER
ESTIMATED QUANTITIES	348
GENERAL NOTES	349
SITUATION PLAN	350
ABUTMENT DETAILS	351
SUPERSTRUCTURE DETAILS	366
SLAB REINFORCING DETAILS	372
BARRIER RAILING DETAILS	378
LIGHTING DETAILS	383
SUBDRAIN DETAILS	384
SLOPE PROTECTION	385
BRIDGE WING ARMORING	386
ABUTMENT BACKFILL DETAILS	387
ANTI-GRAFFITI COATING	389
SOIL PROFILE SHEETS	SPS.8

ROADWAY QUANTITIES SHOWN ELSEWHERE IN THESE PLANS.

DESIGN FOR 9°41'0" SKEW (L.A.)

134'-9 x 40'-0

WELDED GIRDER BRIDGE

134'-9 SIMPLE SPAN

ESTIMATED QUANTITIES

STA. 1503+40.88, BASELINE U.S. 67 RAMP A TBD

SCOTT COUNTY

IOWA DEPARTMENT OF TRANSPORTATION - HIGHWAY DIVISION

DESIGN SHEET NO. 1 OF 42 FILE NO. 30253 DESIGN NO. 3808

benesch engineers · scientists · planners

Alfred Benesch & Company
205 North Michigan Avenue, Suite 2400
Chicago, Illinois 60601
312-565-0450 Job No. 10061

GENERAL NOTES:

THIS DESIGN IS FOR A NEW 134'-9 × 40'-0 CONTINUOUS WELDED GIRDER EXIT RAMP A BRIDGE CARRYING TWO LANES OF TRAFFIC OVER MISSISSIPPI BLVD. FROM EASTBOUND INTERSTATE 74 TO U.S. 67.

DURING CONSTRUCTION OF THIS PROJECT THE BRIDGE CONTRACTOR WILL BE REQUIRED TO COORDINATE OPERATIONS WITH THOSE OF OTHER CONTRACTORS WORKING WITHIN THE SAME AREA. OTHER WORK IN PROGRESS DURING THE SAME PERIOD OF TIME IS LISTED IN THE ROADWAY PLANS.

IT SHALL BE THE BRIDGE CONTRACTOR'S RESPONSIBILITY TO PROVIDE SITES FOR EXCESS EXCAVATED MATERIAL. NO PAYMENT FOR OVERHAUL WILL BE ALLOWED FOR MATERIAL HAULED TO THESE SITES.

THE CITY AND UTILITY COMPANIES WHOSE FACILITIES ARE SHOWN ON THE PLANS OR KNOWN TO BE WITHIN THE CONSTRUCTION LIMITS SHALL BE NOTIFIED BY THE BRIDGE CONTRACTOR OF THE CONSTRUCTION STARTING DATE.

THIS BRIDGE IS DESIGNED FOR HL-93 LOADING, PLUS 20 LBS. PER SQUARE FOOT OF ROADWAY FOR FUTURE WEARING SURFACE.

SUBSTRUCTURE CONCRETE SHALL BE PROTECTED FROM STAINING BY A WRAPPING OF POLYETHYLENE OR SIMILAR MATERIALS WHICH SHALL BE LEFT IN PLACE AND KEPT IN A SERVICEABLE CONDITION UNTIL AFTER THE DECK HAS BEEN PLACED. IF SUBSTRUCTURE CONCRETE IS STAINED, THE STAINS SHALL BE REMOVED BY METHODS APPROVED BY THE ENGINEER. ALL COSTS ASSOCIATED WITH THE PROTECTION AND ANY REQUIRED CLEANING OF THE SUBSTRUCTURE CONCRETE SHALL BE INCLUDED IN THE PRICE BID FOR "STRUCTURAL STEEL".

CONCRETE BARRIER RAILS PLACED USING THE SLIPFORM METHOD WILL REQUIRE THE USE OF A CLASS BR CONCRETE IN ACCORDANCE WITH ARTICLE 2513.03, A, 2, OF THE STANDARD SPECIFICATIONS. CAST-IN-PLACE BARRIER RAILS SHALL USE HIGH PERFORMANCE CONCRETE. CLASS D CONCRETE IS NOT PERMITTED FOR CONCRETE BARRIER RAILS (CAST-IN-PLACE OR SLIPFORMED METHOD).

THIS STRUCTURE SHALL BE BUILT WITH WEATHERING STEEL. ALL STRUCTURAL STEEL, EXCEPT AS NOTED, SHALL CONFORM TO ASTM A709 GRADE 50W. PAINTING REQUIREMENTS FOR THIS STRUCTURE SHALL BE IN ACCORDANCE WITH SPECIAL PROVISIONS FOR "FLUOROPOLYMER PAINT FOR STRUCTURAL STEEL". SEE SUPERSTRUCTURE STEEL PAINTING NOTES ON THIS SHEET.

THESE BRIDGE PLANS LABEL ALL REINFORCING STEEL WITH ENGLISH NOTATION (5a1 IS $\frac{5}{8}$ INCH DIAMETER BAR). ENGLISH REINFORCING STEEL RECEIVED IN THE FIELD MAY DISPLAY THE FOLLOWING "BAR DESIGNATION". THE "BAR DESIGNATION" IS THE STAMPED IMPRESSION ON THE REINFORCING BARS, AND IS EQUIVALENT TO THE BAR DIAMETER IN MILLIMETERS.

ENGLISH SIZE:	3	4	5	6	7	8	9	10	11
BAR DESIGNATION:	10	13	16	19	22	25	29	32	36

GUARDRAIL TO BE PLACED BY OTHERS.

CONSTRUCTION SEQUENCE FOR PREDRILLED HOLES FOR PILES AT ABUTMENTS 31A & 32A SHALL BE PERFORMED AS FOLLOWS:

1.) IF LIMESTONE ROCK STRATUM IS ENCOUNTERED AT ELEVATION GREATER THAN OR EQUAL TO 571.07 (31A) OR 572.50 (32A).
- CONTRACTOR SHALL PREDRILL 18" DIAMETER HOLE TO ELEVATION 571.07 OR (31A) 572.50 (32A).
- CONTRACTOR SHALL PREDRILL 14" DIAMETER HOLE TO ELEVATION 568.07 (31A) OR 569.50 (32A).
- THE BOTTOM 3 FEET OF THE CORED HOLE SHALL BE FILLED WITH CLASS "C" STRUCTURAL CONCRETE BEFORE PILES ARE POSITIONED AND SEATED.
- PILES SHALL BE SEATED WHILE CONCRETE IS PLASTIC.
- PILES SHALL BE BRACED IN THE CORRECT POSITION UNTIL CONCRETE HAS REACHED 3500 PSI COMPRESSIVE STRENGTH.
- HOLE SHALL BE FILLED WITH BENTONITE ABOVE ELEVATION 571.07 (31A) 572.50 (32A).
- QUANTITY FOR "CORING" BID ITEM SHALL MEASURED FROM ELEVATION 568.07 (31A) OR 569.50 (32A). TO TOP OF ROCK.
- PREBORING OF HOLES SHALL NOT BE MEASURED SEPARATELY FOR PAYMENT. ALL WORK ASSOCIATED WITH PREBORING SHALL BE INCLUDED WITH THE PRICE BID FOR "CORING".

2.) IF LIMESTONE ROCK STRATUM IS ENCOUNTERED AT ELEVATION BELOW 571.07 (31A) OR 572.50 (32A).
- CONTRACTOR SHALL PREDRILL 18" DIAMETER HOLE TO TOP OF ROCK.
- CONTRACTOR SHALL PREDRILL 14" DIAMETER HOLE TO ELEVATION 3 FT BELOW TOP OF ROCK.
- THE BOTTOM 3 FEET OF THE CORED HOLE SHALL BE FILLED WITH CLASS "C" STRUCTURAL CONCRETE BEFORE PILES ARE POSITIONED AND SEATED.
- PILES SHALL BE SEATED WHILE CONCRETE IS PLASTIC.
- PILES SHALL BE BRACED IN THE CORRECT POSITION UNTIL CONCRETE HAS REACHED 3500 PSI COMPRESSIVE STRENGTH.
- HOLE SHALL BE FILLED WITH GRANULAR MATERIAL BELOW ELEVATION 571.07 (31A) OR 572.50 (32A).
- HOLE SHALL BE FILLED WITH BENTONITE ABOVE ELEVATION 571.07 (31A) OR 572.50 (32A).
- QUANTITY FOR "CORING" BID ITEM SHALL BE 3.0 FT.
- PREBORING OF HOLES SHALL NOT BE MEASURED SEPARATELY FOR PAYMENT. ALL WORK ASSOCIATED WITH PREBORING SHALL BE INCLUDED WITH THE PRICE BID FOR "CORING".

BRIDGE DECK DIMENSIONS TABLE

	ITEM	UNITS	QUANTITY
1	DECK LENGTH	L.F.	137.8
2	MINIMUM DECK WIDTH	L.F.	43.7
3	MAXIMUM DECK WIDTH	L.F.	43.7
4	DECK AREA	S.F.	6017

1. DECK LENGTH IS MEASURED FROM FACE-TO-FACE OF PAVING NOTCHES ALONG THE CENTERLINE OF THE STRUCTURE.

2, 3. DECK WIDTHS ARE MEASURED FROM OUT-TO-OUT OF DECK PERPENDICULAR TO THE CENTERLINE OF THE STRUCTURE.

4. DECK AREA IS TO BE BASED ON THE FACE-TO-FACE PAVING NOTCH DISTANCE AND OUT-TO-OUT DECK DIMENSIONS.

benesch
engineers · scientists · planners
Alfred Benesch & Company
205 North Michigan Avenue, Suite 2400
Chicago, Illinois 60601
312-565-0450 Job No. 10061

GENERAL NOTES (CONTINUED):

THE APPROACH FILLS AS SHOWN ARE NOT PART OF THIS CONTRACT. THE APPROACH FILLS AT ABUTMENT 31A ARE TO BE IN PLACE BEFORE ABUTMENT 31A PILES ARE DRIVEN. THE BRIDGE CONTRACTOR IS TO LEVEL OFF AND SHAPE THE BERMS TO THE ELEVATIONS AND DIMENSIONS SHOWN. DRESSING OF SLOPES OUTSIDE THE BRIDGE AREA NOT DISTURBED BY THE BRIDGE CONTRACTOR SHALL BE PAID FOR AS EXTRA WORK. THE APPROACH FILLS AT THE WEST SIDE OF ABUTMENT 32A ARE WITHIN THE SOIL REINFORCEMENT ZONE OF A M.S.E. WALL. ABUTMENT 32A PILES DRIVEN WITHIN THE M.S.E. WALL SOIL REINFORCEMENT ZONE SHALL BE DRIVEN BEFORE CONSTRUCTION OF THE M.S.E. WALL AND REQUIRE A 24" CMP ENCASEMENT. ABUTMENT 32A PILES DRIVEN OUTSIDE OF THE SOIL REINFORCEMENT ZONE BEFORE CONSTRUCTION OF THE EMBANKMENT AND THE M.S.E. WALL SHALL ALSO REQUIRE ENCASEMENT. ABUTMENT 32A PILES DRIVEN OUTSIDE OF THE SOIL REINFORCEMENT ZONE AFTER CONSTRUCTION OF THE EMBANKMENT AND THE M.S.E. WALL SHALL REQUIRE PREBORED HOLES IN ACCORDANCE WITH SECTION 2501 OF THE STANDARD SPECIFICATIONS.

CAST IN-ONE-PIECE STEEL PILE POINTS ARE REQUIRED FOR THE PILES IN ACCORDANCE WITH ARTICLE 4167.02 OF THE CURRENT STANDARD SPECIFICATIONS AND MATERIALS I.M. 468.

CMP CASINGS SHALL BE CENTERED AROUND THE PILING IN ABUTMENT 32A AS SHOWN ON DESIGN SHEET 5. FOR DETAILS OF BLOCKING REQUIRED TO MAINTAIN POSITION OF CMP CASINGS DURING M.S.E. WALL PLACEMENT, SEE DESIGN SHEET 27. THE CMP SHALL MEET THE REQUIREMENTS FOR CMP ENTRANCE UNDER 15' OF FILL. CMP SHALL BE BACKFILLED WITH A LOOSE DRY SAND MEETING SPECIFICATION 4110, GRADATION NO. 1.

KEYWAY DIMENSIONS SHOWN ON THE PLANS ARE BASED ON NOMINAL DIMENSIONS UNLESS STATED OTHERWISE. IN ADDITION, THE BEVEL USED ON THE KEYWAY SHALL BE LIMITED TO A MAXIMUM OF 10 DEGREES FROM VERTICAL.

STAINLESS STEEL REBAR SHALL BE SHIPPED, HANDLED AND PLACED SUCH THAT CARBON STEEL DOES NOT COME IN CONTACT WITH THE STAINLESS STEEL REBAR. PADDING SHALL BE USED TO SEPARATE CARBON STEEL BUNDLING BANDS OR LIFTING DEVICES FROM THE STAINLESS STEEL REBAR. WIRE ROPE SHALL NOT BE USED IN LIFTING OR HANDLING THE STAINLESS STEEL REINFORCING. COVER STAINLESS STEEL REBAR WITH TARPS DURING OUTDOOR STORAGE. USE WOODEN SPACERS TO SEPARATE BUNDLES OF STAINLESS STEEL REBAR FROM OTHER TYPES OF REBAR. USE WOODEN SUPPORTS TO STORE STAINLESS STEEL REBAR OFF THE GROUND OR SHOP FLOOR.

ALL REINFORCED BARS AND BARS NOTED AS DOWELS SUPPLIED FOR THIS STRUCTURE SHALL BE DEFORMED REINFORCEMENT UNLESS OTHERWISE NOTED OR SHOWN.

FAINT LINES ON PLANS INDICATE THE EXISTING STRUCTURE BY OTHERS. SEE DESIGN NO. 3408. LONGITUDINAL GROOVING WILL NOT BE A PART OF THIS CONTRACT, BUT WILL BE DONE BY OTHERS PRIOR TO OPENING THE BRIDGE TO TRAFFIC.

REFER TO THE TRAFFIC CONTROL PLAN ELSEWHERE IN THESE PLANS.

STEEL PAINTING NOTES:

EXTERIOR SURFACES: ALL EXTERIOR FACES OF THE FASCIA GIRDERS WITHIN THE LIMITS SHOWN IN THESE PLANS SHALL BE PAINTED IN ACCORDANCE WITH THE "SPECIAL PROVISIONS FOR FLUOROPOLYMER PAINT FOR STRUCTURAL STEEL". THE FINISH COAT PAINT COLOR SHALL MATCH FEDERAL STANDARD NO. 595C COLOR NUMBER 26099 SATIN GRAY-BLUE. ZONE PAINTING OF SUPERSTRUCTURE STEEL NEAR THE EXPANSION JOINTS IN ACCORDANCE WITH THE STANDARD SPECIFICATIONS SHALL APPLY TO INTERIOR GIRDER SURFACES BUT NOT THE FASCIA SURFACES LISTED ABOVE.

PROTECTION OF PAINTED SURFACES: PAINTED SURFACES SHALL BE PROTECTED FROM DAMAGE DURING SHIPMENT AND DURING ERECTION. PADDING OR OTHER MATERIAL APPROPRIATE FOR PROTECTING PAINTED SURFACES SHALL BE PLACED BETWEEN THE DECK FORMWORK BRACING AND THE EXTERIOR GIRDER FACE DURING CONSTRUCTION OF THE DECK. AFTER ERECTION OF THE BRIDGE, PAINTING OF EXTERIOR FASTENERS AND TOUCHUP OF PAINTED SURFACES SHALL BE IN ACCORDANCE WITH THE "SPECIAL PROVISIONS FOR FLUOROPOLYMER PAINTS FOR STRUCTURAL STEEL".

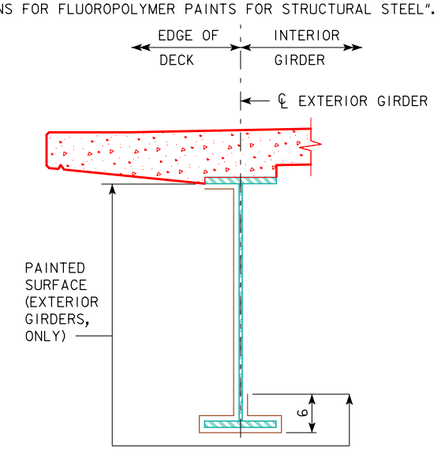

LIMITS OF PAINTING DETAIL
(BARRIER RAIL NOT SHOWN)

DESIGN STRESSES:

DESIGN STRESSES FOR THE FOLLOWING MATERIALS ARE IN ACCORDANCE WITH THE AASHTO LRFD BRIDGE DESIGN SPECIFICATIONS, 5th Ed, SERIES OF 2010, EXCEPT AS NOTED IN THE CURRENT IOWA BRIDGE DESIGN MANUAL.

REINFORCING STEEL IN ACCORDANCE WITH LRFD AASHTO SECTION 5, GRADE 60.

CONCRETE IN ACCORDANCE WITH LRFD AASHTO SECTION 5, f'c = 3,500 PSI.

BRIDGE DECK CONCRETE f'c = 3,500 PSI.

STRUCTURAL STEEL IN ACCORDANCE WITH LRFD AASHTO SECTION 6. ASTM A709 GRADE 36, GRADE 50, AND GRADE 50W (AASHTO M270 GRADE 36, GRADE 50, AND GRADE 50W).

FATIGUE CYCLES BASED ON INFINITE FATIGUE.

SPECIFICATIONS:

DESIGN: AASHTO LRFD 5th Ed, SERIES OF 2010, EXCEPT AS NOTED IN THE CURRENT IOWA BRIDGE DESIGN MANUAL.

CONSTRUCTION: IOWA DEPARTMENT OF TRANSPORTATION STANDARD SPECIFICATIONS FOR HIGHWAY AND BRIDGE CONSTRUCTION, SERIES 2015, PLUS APPLICABLE GENERAL SUPPLEMENTAL SPECIFICATIONS, DEVELOPMENTAL SPECIFICATIONS, SUPPLEMENTAL SPECIFICATIONS AND SPECIAL PROVISIONS SHALL APPLY TO CONSTRUCTION WORK ON THIS PROJECT.

THE DEVELOPMENTAL SPECIFICATIONS, DS-15033, FOR HIGH PERFORMANCE CONCRETE FOR STRUCTURES SHALL APPLY TO WORK ON THIS PROJECT.

THE DEVELOPMENTAL SPECIFICATIONS, DS-15017, FOR ADHESIVE-BONDED ANCHORS AND DOWELS FOR TRAFFIC RAILINGS SHALL APPLY TO WORK ON THIS PROJECT.

THE SPECIAL PROVISIONS FOR FLUOROPOLYMER PAINT FOR STRUCTURAL STEEL SHALL APPLY TO WORK ON THIS PROJECT.

THE SPECIAL PROVISIONS FOR ANTI-GRAFFITI COATING SHALL APPLY TO WORK ON THIS PROJECT.

SHOP DRAWING SUBMITTALS

SHOP DRAWINGS SHALL BE SUBMITTED FOR THE FOLLOWING ITEMS SHOWN IN THE TABLE BELOW. (NOTE ADDITIONAL SHOP DRAWINGS MAY BE REQUIRED IN ACCORDANCE WITH ARTICLE 1105.03 OF THE STANDARD SPECIFICATIONS.)

SUBMITTAL REQUIREMENTS FOR SHOP DRAWINGS SHOULD BE IN ACCORDANCE WITH 1105.03 OF THE STANDARD SPECIFICATIONS FOR HIGHWAY AND BRIDGE CONSTRUCTION OF THE IOWA DEPARTMENT OF TRANSPORTATION.

1	STRUCTURAL STEEL
2	ERECTION PLANS
3	AESTHETIC ROADWAY BARRIER
4	STRUCTURAL STEEL RAILING, TRAFFIC

ALIGNMENTS SHOWN ELSEWHERE IN THESE PLANS.

POLLUTION PREVENTION PLAN SHOWN ELSEWHERE IN THESE PLANS.

DESIGN FOR 9°41'0" SKEW (L.A.)

134'-9 x 40'-0
WELDED GIRDER BRIDGE
134'-9 SIMPLE SPAN

GENERAL NOTES

STA. 1503+40.88, BASELINE U.S. 67 RAMP A TBD

SCOTT COUNTY

IOWA DEPARTMENT OF TRANSPORTATION - HIGHWAY DIVISION

DESIGN SHEET NO. 2 OF 42 FILE NO. 30253 DESIGN NO. 3808

BENCH MARK NO. 500: STA. 6781+18.92 LT. 161.19' ELEV. 575.797, CHISELED "X" IN BOLT E. SIDE CONCRETE STRUCTURE.

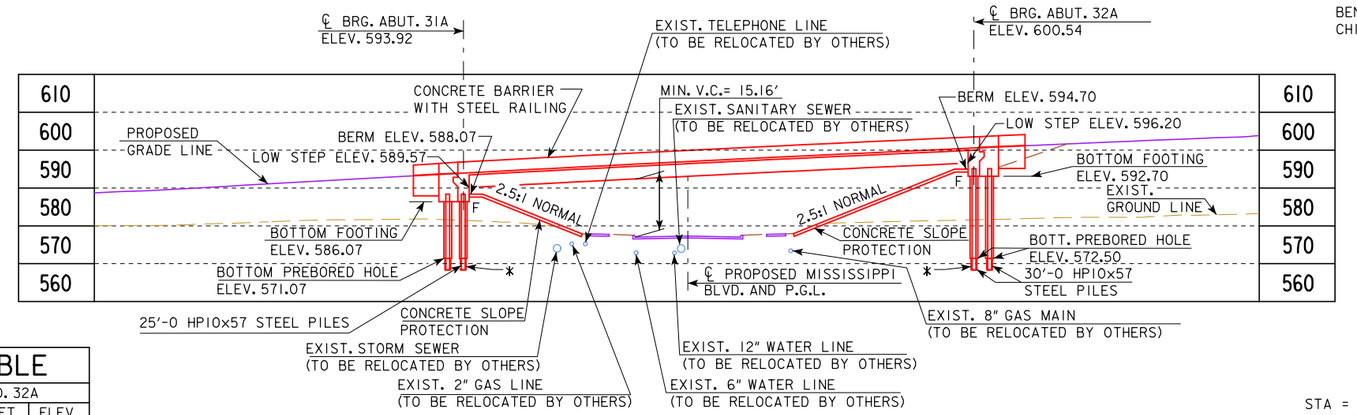

* 3' CONCRETE FILLED ROCK CORE

LONGITUDINAL SECTION ALONG BASELINE U.S. 67 RAMP A

NOTE: ABUTMENTS NOT SHOWN SKEWED FOR CLARITY.

PROPOSED PROFILE GRADE U.S. 67 RAMP A

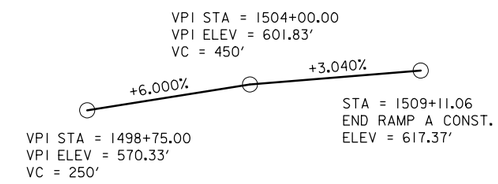

PROPOSED PROFILE GRADE MISSISSIPPI BLVD.

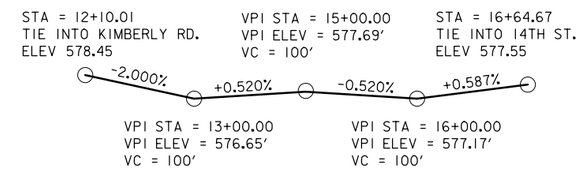

BERM SLOPE LOCATION TABLE

	ABUTMENT NO. 31A			ABUTMENT NO. 32A		
	STATION	OFFSET	ELEV.	STATION	OFFSET	ELEV.
A1	1503+07.64	16.5' LT	578.04	1503+63.43	16.5' LT	578.20
A2	1503+02.77	12.00' RT	577.66	1503+58.57	12.00' RT	577.76
A3	1502+98.59	36.5' RT	577.51	1503+54.39	36.5' RT	577.55
B1	1502+80.88	16.5' LT	587.82	1504+06.50	16.5' LT	594.45
B2	1502+76.02	12.00' RT	587.82	1504+01.64	12.00' RT	594.45
B3	1502+71.84	36.5' RT	587.82	1503+97.46	36.5' RT	594.45

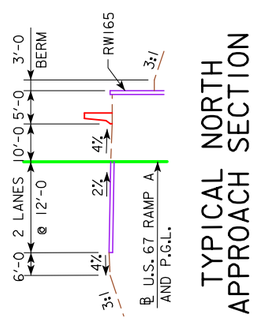

TYPICAL NORTH APPROACH SECTION

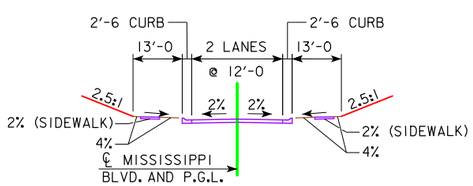

TYPICAL SECTION MISSISSIPPI BLVD.

NOTES:

E - DENOTES "EXPANSION BEARING"

F - DENOTES "FIXED BEARING"

MISSISSIPPI BLVD. SHALL BE LOWERED PRIOR TO CONSTRUCTION OF THIS BRIDGE.

FOR LOCATIONS OF SOIL BORINGS SEE SHEET SPS. 8.

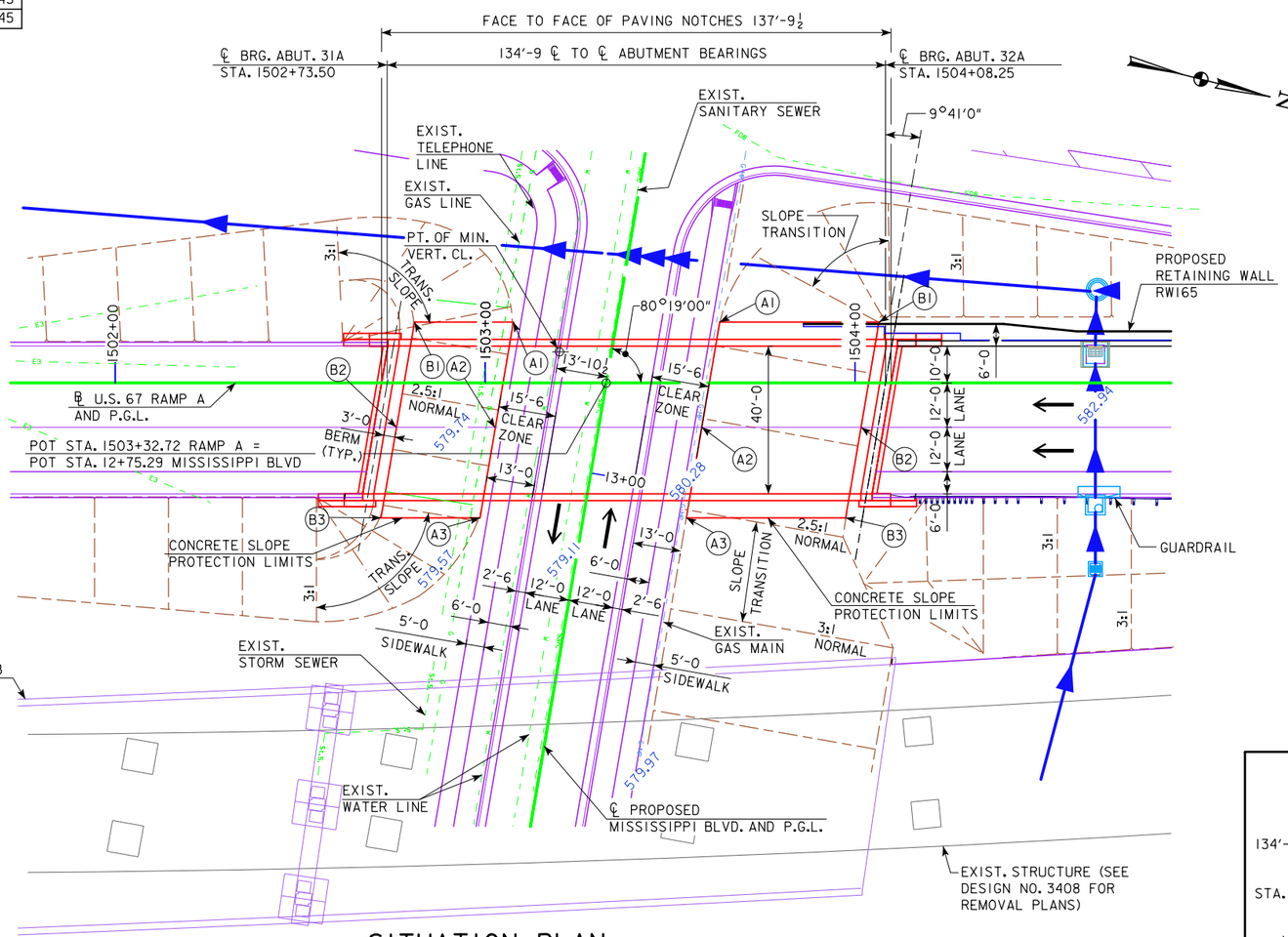

SITUATION PLAN

MINIMUM VERTICAL CLEARANCE

OVERHEAD STATION = 1503+20.06, 8.33' LT.
OVERHEAD ELEVATION = 596.18'
DEPTH OF SUPERSTRUCTURE = 3.99'
UNDERPASS STATION = 12+69.21, 13.88' RT.
UNDERPASS ELEVATION = 577.03'
MINIMUM VERTICAL CLEARANCE = 15.16'

RAMP A

TRAFFIC ESTIMATE

2015	AADT	4,440	V.P.D.
2035	AADT	5,920	V.P.D.
2035	DHV	400	V.P.H.
TRUCKS		5	%

LOCATION

U.S. 67 RAMP A OVER MISSISSIPPI BLVD.
T-78 N R-4 E
SECTION 29
DAVENPORT TOWNSHIP
SCOTT COUNTY
CITY OF BETTENDORF
LATITUDE = 41.528195
LONGITUDE = -90.514479
FHWA NO. 700040

DESIGN FOR 9°41'0" SKEW (L.A.)

134'-9 x 40'-0 WELDED GIRDER BRIDGE

134'-9 SIMPLE SPAN

SITUATION PLAN

STA. 1503+40.88, BASELINE U.S. 67 RAMP A TBD

SCOTT COUNTY

IOWA DEPARTMENT OF TRANSPORTATION - HIGHWAY DIVISION

DESIGN SHEET NO. 3 OF 42 FILE NO. 30253 DESIGN NO. 3808

benesch engineers · scientists · planners
Alfred Benesch & Company
205 North Michigan Avenue, Suite 2400
Chicago, Illinois 60601
312-565-0450 Job No. 10061

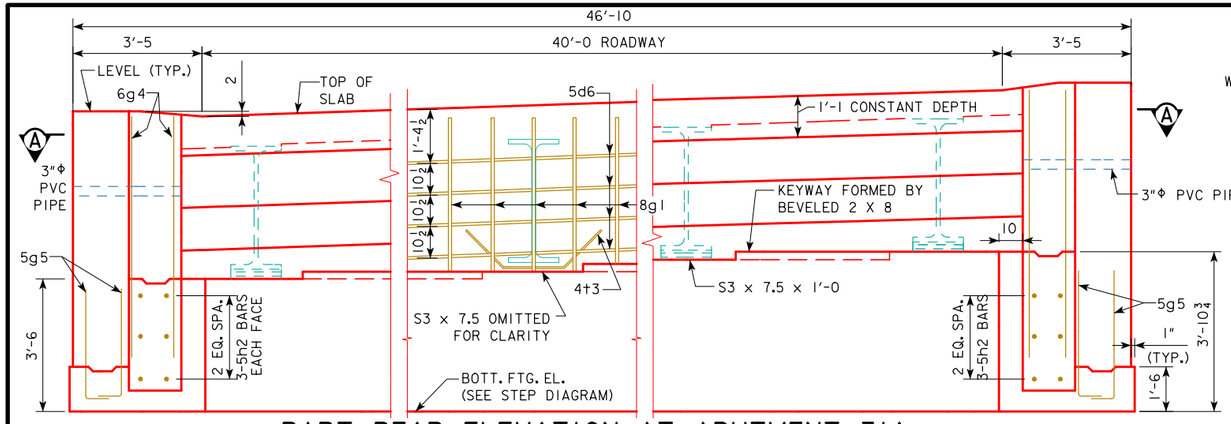

PART REAR ELEVATION AT ABUTMENT 31A

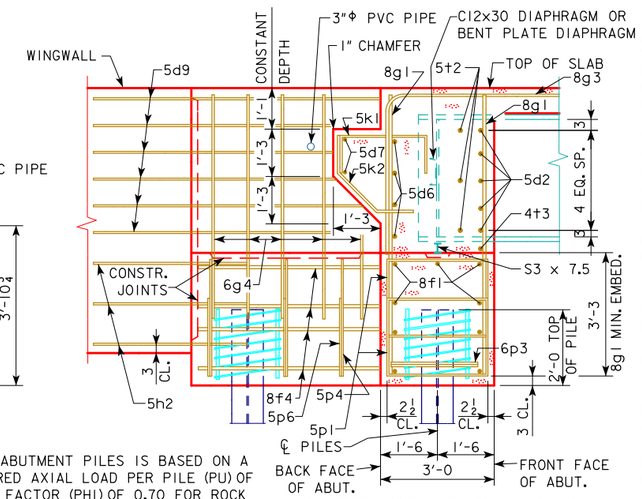

PART SECTION B-B

BENCH MARK NO. 500: STA. 6781+18.92 LT. 161.19' ELEV. 575.797, CHISELED "X" IN BOLT E. SIDE CONCRETE STRUCTURE.

CORING NOTES:

NOTES FOR ABUTMENT 31A & 32A:
HOLES FOR ABUTMENT PILING SHALL BE PREDRILLED TO ELEV. 568.07 (31A) & 569.50 (32A) LOWER SUCH THAT THE BOTTOM OF THE HOLE SHALL BE AT LEAST 3 FEET INTO THE LIMESTONE END BEARING STRATUM AS SHOWN ON THE SOIL PROFILE SHEET. LOWER THE BOTTOM OF THE HOLE AS NECCESSARY TO MEET THIS REQUIREMENT. THE PORTION OF THE 18"Φ HOLE DRILLED THROUGH SOIL SHALL BE CONSIDERED INCIDENTAL TO OTHER WORK. THE PORTION OF THE HOLE DRILLED THROUGH BEDROCK SHALL BE CLASSIFIED AS "CORING". THE "CORING" HOLES SHALL BE DRILLED IN TWO STAGES. THE BOTTOM 3 FEET OF THE HOLE SHALL BE 14 INCHES IN DIAMETER AND THE TOP PORTION OF THE HOLE SHALL BE 18 INCHES IN DIAMETER.

THE CONTRACTOR SHALL DRIVE THE PILING TO VERIFY COMPETENT BEARING IN THE BEDROCK AS APPROVED BY THE ENGINEER. THE NUMBER OF HAMMER BLOWS SHALL BE LIMITED TO PREVENT DAMAGE TO THE PILING. THE "CORING" SHALL BE BACKFILLED WITH 3 FEET OF CLASS "C" STRUCTURAL CONCRETE BEFORE PILES ARE POSITIONED AND SEATED. PILES SHALL BE SEATED WHILE CONCRETE IS PLASTIC.

HOLES SHALL BE FILLED WITH BENTONITE ABOVE ELEVATION 571.07 (31A) OR 572.50 (32A).

PILES SHALL BE BRACED IN THE CORRECT POSITION UNTIL CONCRETE HAS REACHED 3500 PSI COMPRESSIVE STRENGTH.

FOR ADDITIONAL ABUTMENT NOTES, SEE DESIGN SHEET 5.

PILING NOTES:

THE CONTRACT LENGTH OF 25 FEET FOR THE ABUTMENT PILES IS BASED ON A MIXED SOIL CLASSIFICATION, A TOTAL FACTORED AXIAL LOAD PER PILE (PU) OF 132.2 KIPS, AND A GEOTECHNICAL RESISTANCE FACTOR (PHI) OF 0.70 FOR ROCK END BEARING. THE NOMINAL AXIAL BEARING RESISTANCE FOR CONSTRUCTION CONTROL WAS DETERMINED FROM A MIXED SOIL CLASSIFICATION AND A GEOTECHNICAL RESISTANCE FACTOR (PHI) OF 0.70 FOR ROCK END BEARING. PILES ARE ASSUMED TO BE DRIVEN FROM A START ELEVATION AT THE BOTTOM OF PREBORE. THE REQUIRED NOMINAL AXIAL BEARING RESISTANCE FOR THE ABUTMENT PILES IS 94 TONS AT END OF DRIVE OR RETAP. THE PILE CONTRACT LENGTH SHALL BE DRIVEN AS PER PLAN UNLESS PILES REACH REFUSAL. CONSTRUCTION CONTROL REQUIRES A WEAP ANALYSIS WITH BEARING GRAPH.

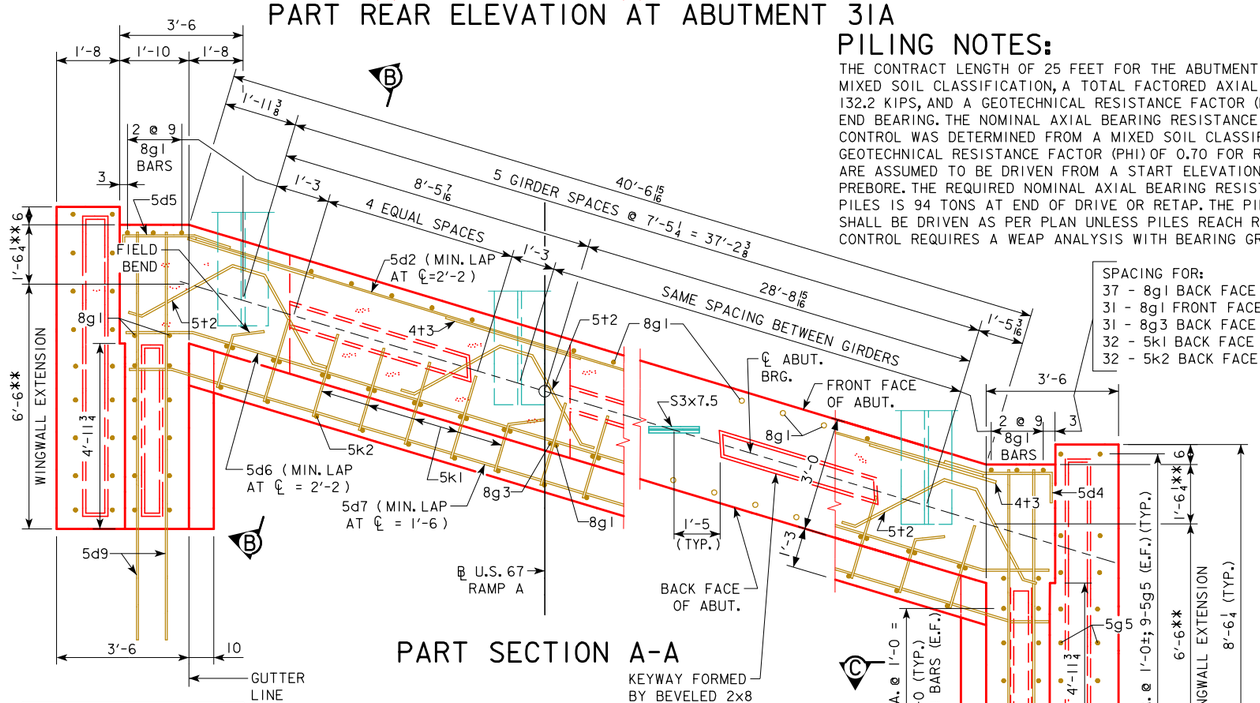

PART SECTION A-A

SPACING FOR:
37 - 8g1 BACK FACE
31 - 8g1 FRONT FACE
31 - 8g3 BACK FACE
32 - 5k1 BACK FACE
32 - 5k2 BACK FACE

NOTES:

1. 1" DIAMETER HOLES DRILLED THROUGH BEAM WEB FOR 5d2 AND 5t2 BARS.
2. THE SPIRAL AT THE TOP OF EACH PILE TO BE 7 TURNS OF No. 2 BAR, 21" DIAMETER, 3" PITCH WITH 3 - L 7/8×7/8×1/8 SPACERS PUNCHED TO HOLD SPIRAL.

**-DIMENSIONS TO INTERSECTION OF GUTTER LINE AND ℄ BEARING.

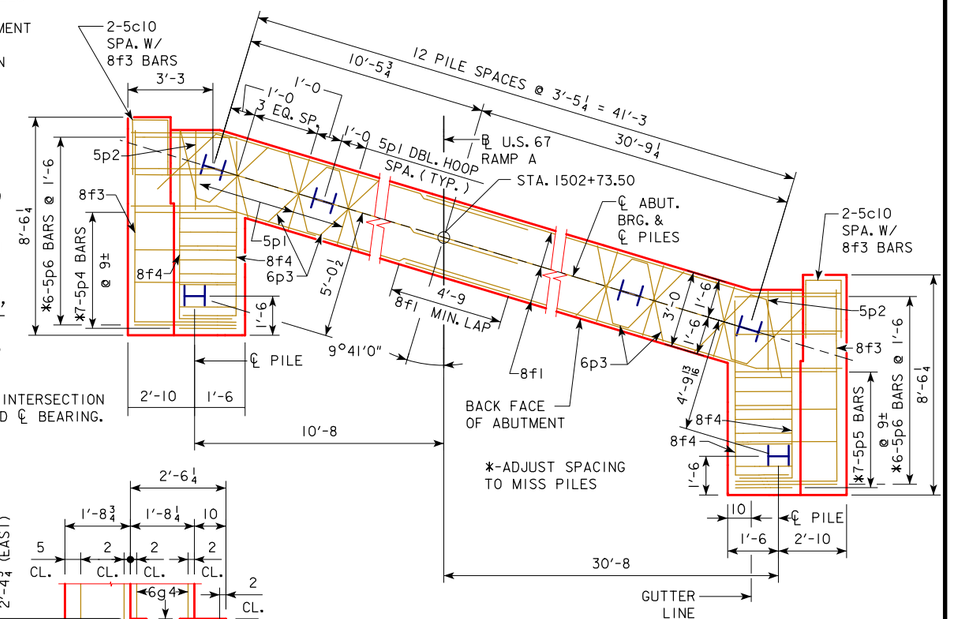

ABUTMENT PILE PLAN
15 - HP 10 x 57 STEEL BEARING PILES

NOTES:

1. ASSUME DIMENSIONS AND BAR DETAILING AT WINGWALL FOOTINGS ARE TYPICAL TO BOTH SIDES OF THE ABUTMENT FOOTING IF NOT OTHERWISE SHOWN.
2. SHIFT 8g1 BARS IN F.F. AS NECESSARY TO MISS BEAMS. PLACE 8g3 BARS PARALLEL TO LONGITUDINAL STEEL.
3. SEE DESIGN SHEET 27 FOR ABUTMENT BAR LIST.

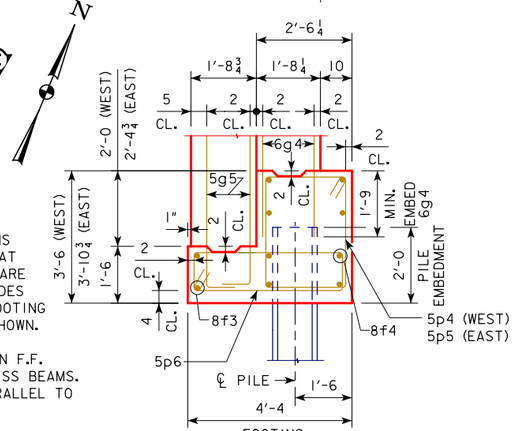

SECTION C-C
(WEST SHOWN, EAST SIMILAR)

TABLE OF ELEVATIONS AND STEPS	
	ABUT. NO. 31A
EL. A	589.57
EL. B	589.65
EL. C	589.73
EL. D	589.81
EL. E	589.89
EL. F	589.97
STEP a	1"
STEP b	1"
STEP c	1"
STEP d	1"
STEP e	1"

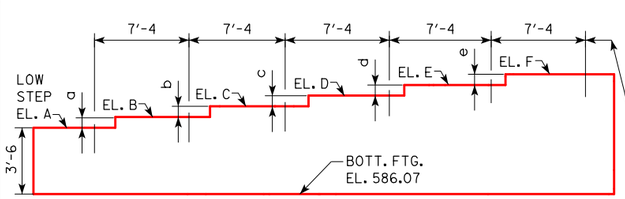

ABUTMENT STEP DIAGRAM
(REAR ELEVATION)

℄ GIRDERS (SPACING MEASURED PERPENDICULAR TO ℄ U.S. 67 RAMP A)

DESIGN FOR 9°41'0" SKEW (L.A.)

134'-9 x 40'-0 WELDED GIRDER BRIDGE

134'-9 SIMPLE SPAN

ABUTMENT 31A DETAILS

STA. 1503+40.88, BASELINE U.S. 67 RAMP A — TBD

SCOTT COUNTY

IOWA DEPARTMENT OF TRANSPORTATION - HIGHWAY DIVISION

DESIGN SHEET NO. 4 OF 42 — FILE NO. 30253 — DESIGN NO. 3808

benesch engineers · scientists · planners
Alfred Benesch & Company
205 North Michigan Avenue, Suite 2400
Chicago, Illinois 60601
312-565-0450 Job No. 10061

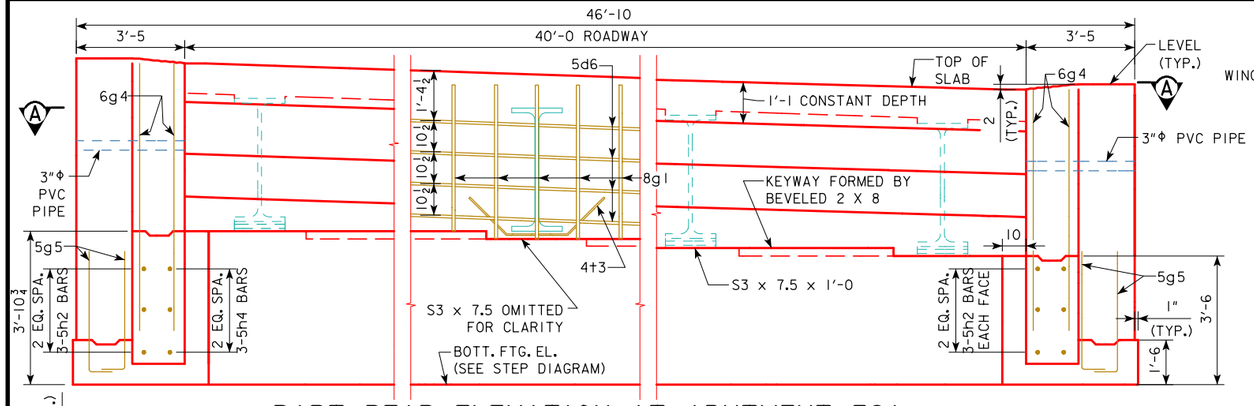

PART REAR ELEVATION AT ABUTMENT 32A

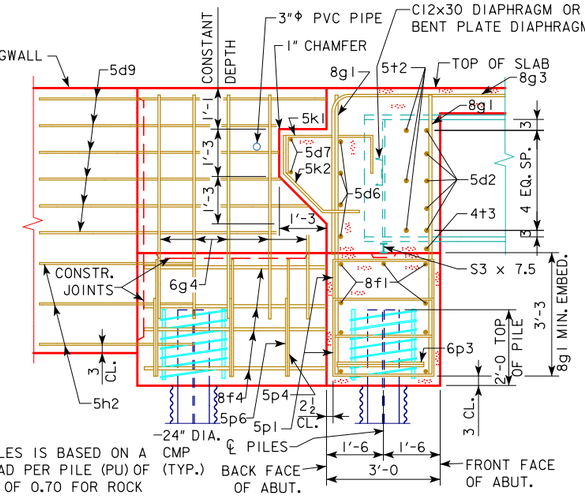

PART SECTION B-B

BENCH MARK NO. 500: STA. 6781+18.92 LT. 161.19' ELEV. 575.797, CHISELED "X" IN BOLT E. SIDE CONCRETE STRUCTURE.

ABUTMENT NOTES:

MINIMUM CLEAR DISTANCE FROM FACE OF CONCRETE TO NEAR REINFORCING BAR IS TO BE 2" UNLESS OTHERWISE NOTED OR SHOWN.

IF NECESSARY TO PREVENT DAMAGE TO THE END OF THE BRIDGE DECK OR BACKWALL FROM CONSTRUCTION EQUIPMENT, AN APPROPRIATE METHOD OF PROTECTION APPROVED BY THE ENGINEER SHALL BE PROVIDED BY THE BRIDGE CONTRACTOR AT NO EXTRA COST TO THE COUNTY OR STATE.

ABUTMENT PILES ARE TO BE DRIVEN TO THE DESIGN PILE BEARING AS GIVEN IN THE ABUTMENT PILE TABLE.

BARRIER RAIL NOT SHOWN IN DETAILS.

FOR ADDITIONAL MASKWALL DETAILS AND REINFORCEMENT, SEE DESIGN SHEETS 9 THRU 18.

STEEL PILE POINTS ARE REQUIRED FOR THE STEEL H-PILES AT THE ABUTMENTS.

CONSTRUCTION JOINT KEYWAYS ARE TO BE FORMED WITH BEVELED 2x8's, EXCEPT AS NOTED.

FOR DETAILS OF BLOCKING REQUIRED TO MAINTAIN POSITION OF CMP CASINGS DURING M.S.E. WALL PLACEMENT, SEE DESIGN SHEET 27.

FOR CORING NOTES, SEE DESIGN SHEET 4.

ABUTMENT PILES DRIVEN WITHIN THE M.S.E. WALL STRAP ZONE REQUIRE 24" CMP ENCASEMENT. PILES DRIVEN OUTSIDE OF STRAP ZONE BEFORE CONSTRUCTION OF EMBANKMENT AND M.S.E. WALL SHALL ALSO REQUIRE ENCASEMENT IN LIEU OF PREBORED HOLES.

PILING NOTES:

THE CONTRACT LENGTH OF 30 FEET FOR THE ABUTMENT PILES IS BASED ON A MIXED SOIL CLASSIFICATION, A TOTAL FACTORED AXIAL LOAD PER PILE (PU) OF 132.2 KIPS, AND A GEOTECHNICAL RESISTANCE FACTOR (PHI) OF 0.70 FOR ROCK END BEARING. THE NOMINAL AXIAL BEARING RESISTANCE FOR CONSTRUCTION CONTROL WAS DETERMINED FROM A MIXED SOIL CLASSIFICATION AND A GEOTECHNICAL RESISTANCE FACTOR (PHI) OF 0.70 FOR ROCK END BEARING. PILES ARE ASSUMED TO BE DRIVEN FROM A START ELEVATION AT THE BOTTOM OF PREBORE. THE REQUIRED NOMINAL AXIAL BEARING RESISTANCE FOR THE ABUTMENT PILES IS 94 TONS AT END OF DRIVE OR RETAP. THE PILE CONTRACT LENGTH SHALL BE DRIVEN AS PER PLAN UNLESS PILES REACH REFUSAL. CONSTRUCTION CONTROL REQUIRES A WEAP ANALYSIS WITH BEARING GRAPH.

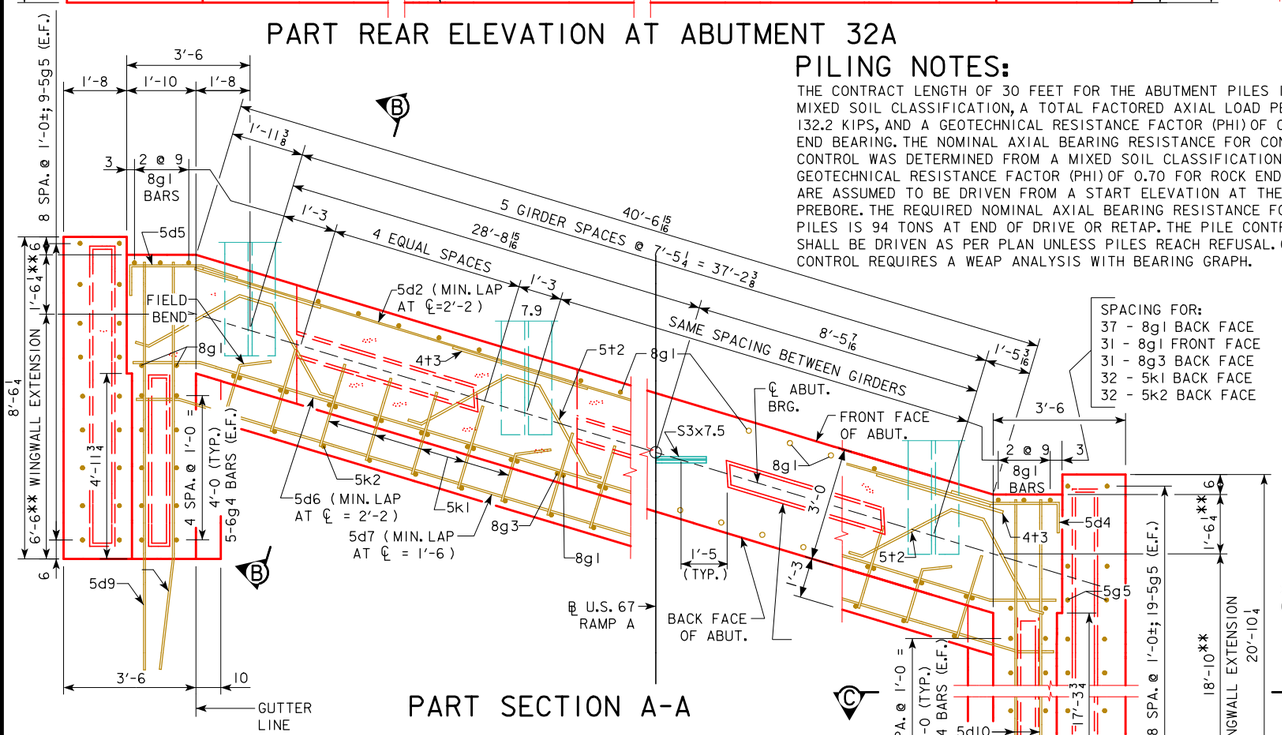

PART SECTION A-A

SPACING FOR:
37 - 8g1 BACK FACE
31 - 8g1 FRONT FACE
31 - 8g3 BACK FACE
32 - 5k1 BACK FACE
32 - 5k2 BACK FACE

NOTES:

1. 1" DIAMETER HOLES DRILLED THROUGH BEAM WEB FOR 5d2 AND 5t2 BARS.
2. THE SPIRAL AT THE TOP OF EACH PILE TO BE 7 TURNS OF No. 2 BAR, 21" DIAMETER, 3" PITCH WITH 3 - L⅞x⅞x⅛ SPACERS PUNCHED TO HOLD SPIRAL.

**-DIMENSIONS TO INTERSECTION OF GUTTER LINE AND ℄ BEARING.

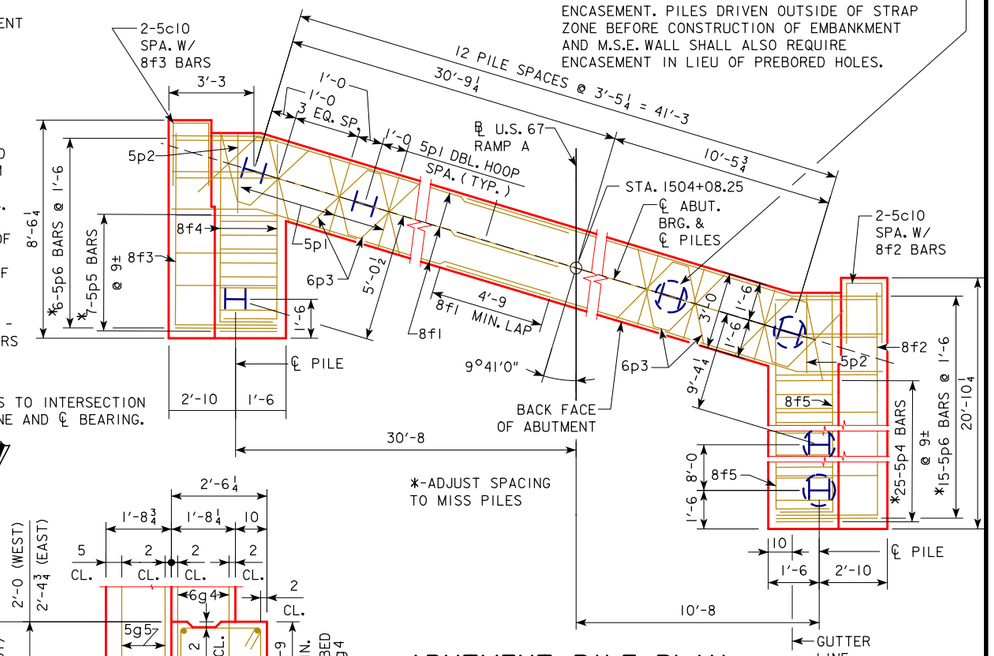

ABUTMENT PILE PLAN

16 - HP 10 x 57 STEEL BEARING PILES

TABLE OF ELEVATIONS AND STEPS

	ABUT. NO. 32A
EL. A	596.20
EL. B	596.29
EL. C	596.38
EL. D	596.47
EL. E	596.56
EL. F	596.65
STEP a	1⅛
STEP b	1⅛
STEP c	1⅛
STEP d	1⅛
STEP e	1⅛

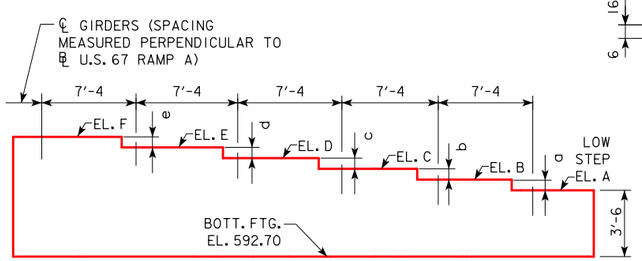

ABUTMENT STEP DIAGRAM

(REAR ELEVATION)

NOTES:

1. ASSUME DIMENSIONS AND BAR DETAILING AT WINGWALL FOOTINGS ARE TYPICAL TO BOTH SIDES OF THE ABUTMENT FOOTING IF NOT OTHERWISE SHOWN.

2. SHIFT 8g1 BARS IN F.F. AS NECESSARY TO MISS BEAMS. PLACE 8g3 BARS PARALLEL TO LONGITUDINAL STEEL.

3. SEE DESIGN SHEET 27 FOR ABUTMENT BAR LIST.

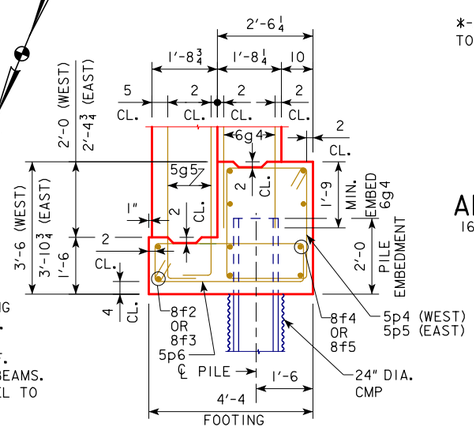

SECTION C-C

(EAST SHOWN, WEST SIMILAR)

DESIGN FOR 9°41'0" SKEW (L.A.)

134'-9 x 40'-0 WELDED GIRDER BRIDGE

134'-9 SIMPLE SPAN

ABUTMENT 32A DETAILS

STA. 1503+40.88, BASELINE U.S. 67 RAMP A — TBD

SCOTT COUNTY

IOWA DEPARTMENT OF TRANSPORTATION - HIGHWAY DIVISION

DESIGN SHEET NO. 5 OF 42 — FILE NO. 30253 — DESIGN NO. 3808

benesch engineers · scientists · planners
Alfred Benesch & Company
205 North Michigan Avenue, Suite 2400
Chicago, Illinois 60601
312-565-0450 Job No. 10061

BENCH MARK NO. 500: STA. 6781+18.92 LT. 161.19' ELEV. 575.797, CHISELED "X" IN BOLT E. SIDE CONCRETE STRUCTURE.

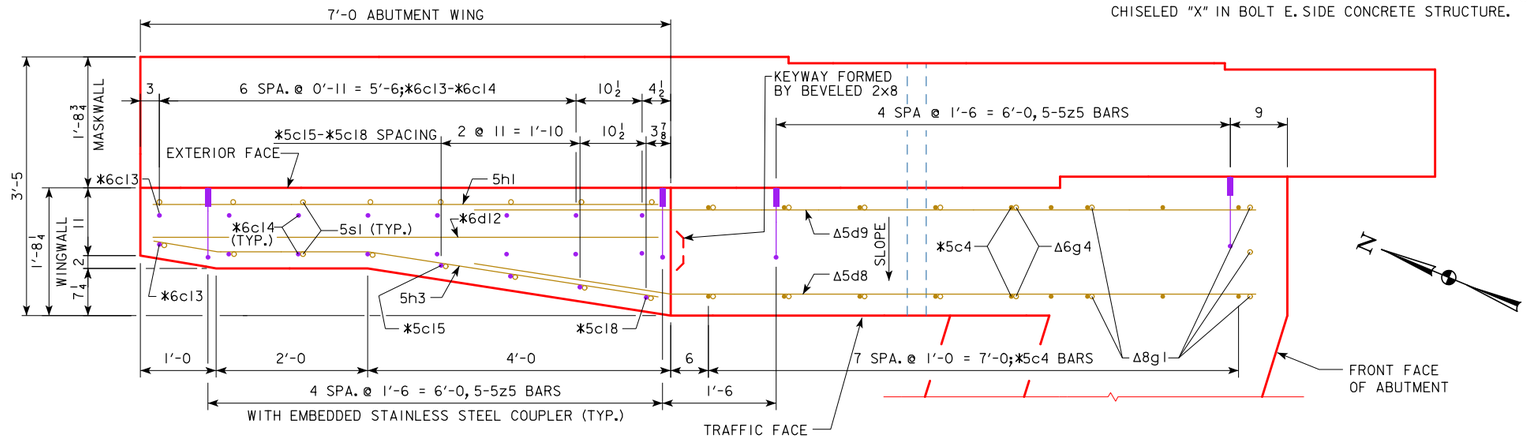

VIEW A-A

** SEE DESIGN SHEET 24 FOR PVC PIPE LOCATION.

* REINFORCING BARS 6c13, 5c4, 6c14, 5c15-18, 6d12 & 4t11 ARE TO BE PLACED WITH ABUTMENT WINGWALL AND ARE INCLUDED IN THE SUPERSTRUCTURE QUANTITIES.

Δ REINFORCING BARS 5d8, 5d9, 8g1, 6g4, 5h2 & 5h4 ARE TO BE PLACED WITH ABUTMENT AND ARE INCLUDED IN THE ABUTMENT QUANTITIES.

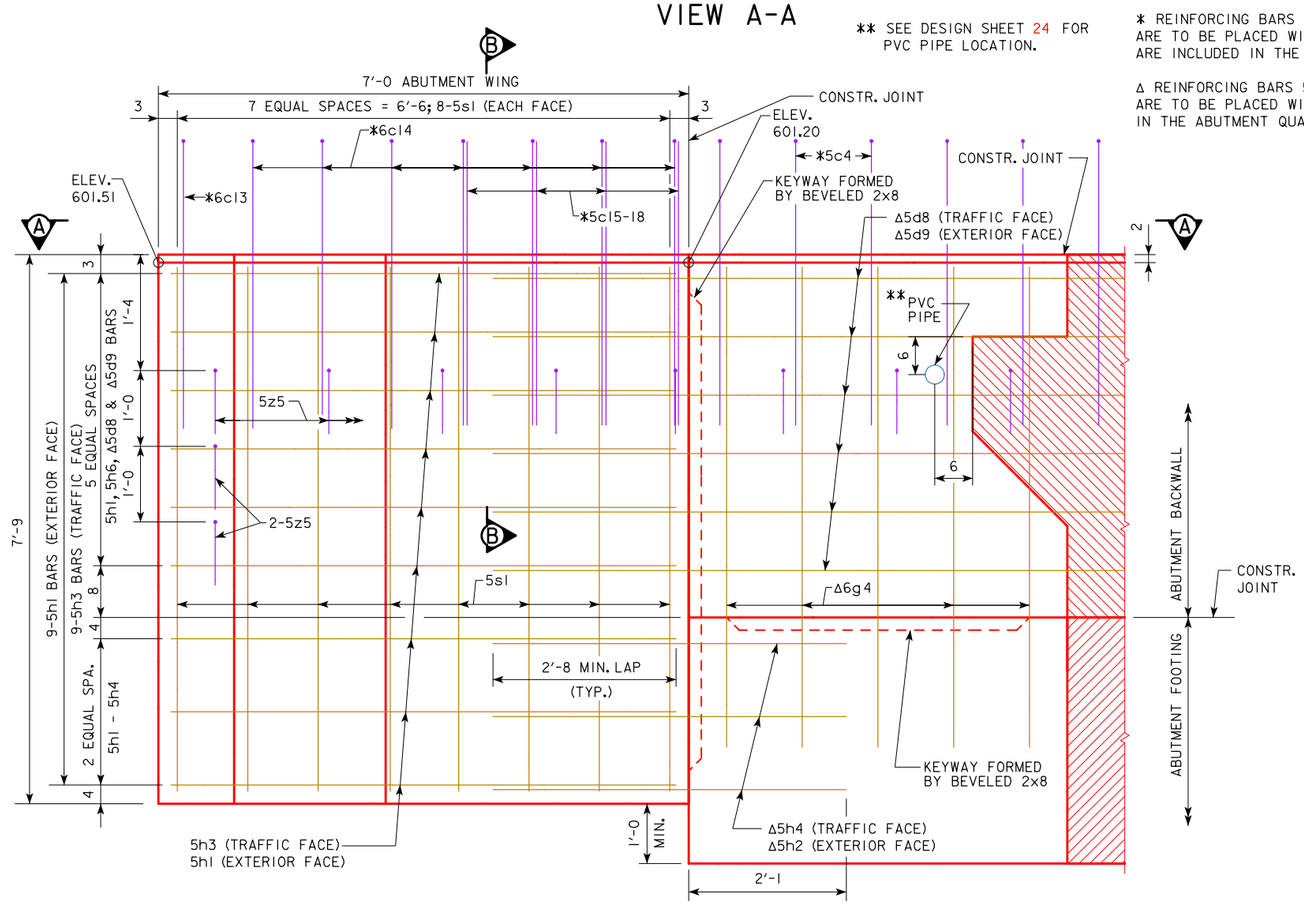

ABUTMENT WING - ELEVATION VIEW - NORTHEAST WING

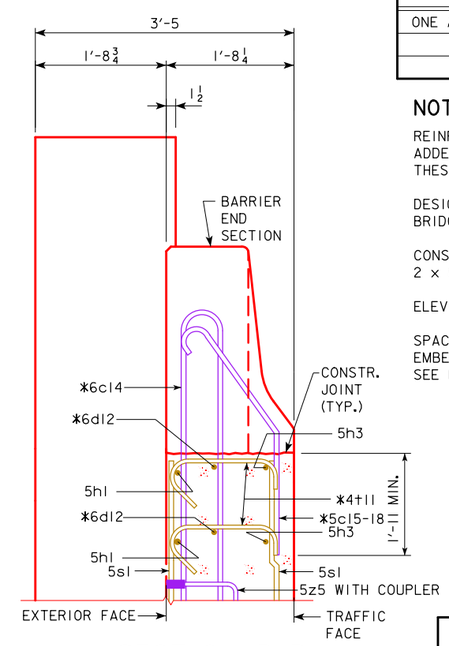

SECTION B-B

FOR DETAILS OF CONCRETE BARRIER RAIL, SEE DESIGN SHEETS 31, 33 & 34.

FOR DETAILS OF MASKWALLS, SEE DESIGN SHEETS 13 AND 14.

FOR DETAILS OF BARRIER END SECTION, SEE DESIGN SHEET 35.

EPOXY REINF. BAR LIST - ONE ABUT. WING

BAR	LOCATION	SHAPE	NO.	LENGTH	WEIGHT
5h1-A	HORIZONTAL BACK FACE		9	6'-8	63
5h3-A	HORIZONTAL TRAFFIC FACE		9	6'-9	63
5s1-A	VERTICAL BOTH FACES		16	7'-5	124
				TOTAL (LBS.)	250

STAINLESS REINF. BAR LIST - ONE ABUT. WING

BAR	LOCATION	SHAPE	NO.	LENGTH	WEIGHT
5z5-A	HORIZONTAL TIE		12	1'-9	22
				TOTAL (LBS.)	22

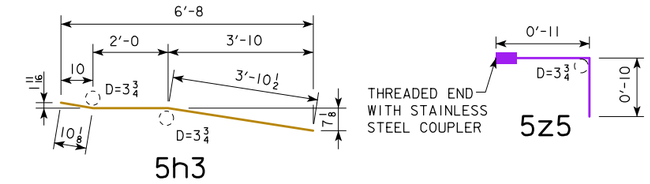

NOTE: ALL DIMENSIONS ARE OUT TO OUT. D = PIN DIAMETER.

BENT BAR DETAILS

CONCRETE PLACEMENT SUMMARY

STRUCTURAL CONCRETE (BRIDGE)	TOTAL
ONE ABUTMENT WINGWALL	2.5
1 ABUTMENT WINGWALL = TOTAL (CU. YDS.)	2.5

NOTES:

REINFORCING STEEL QUANTITY AND CONCRETE QUANTITY ARE TO BE ADDED TO THE SUPERSTRUCTURE QUANTITIES SHOWN ELSEWHERE IN THESE PLANS.

DESIGNATION "-A" SIGNIFIES BAR ASSOCIATED WITH THE RAMP A BRIDGE. "-A" NOT SHOWN IN DETAILS FOR CLARITY.

CONSTRUCTION JOINT KEYWAYS ARE TO BE FORMED WITH BEVELED 2 x 8's, EXCEPT AS NOTED.

ELEVATIONS TAKEN AT TRAFFIC FACE.

SPACE REINFORCING IN ABUTMENT WING TO MISS 1"Φ HOLES AND EMBEDDED 3"Φ PVC PIPE FOR GUARDRAIL CONNECTION. FOR LOCATION SEE DESIGN SHEET 35.

DESIGN FOR 9°41'0" SKEW (L.A.)

134'-9 x 40'-0 WELDED GIRDER BRIDGE

134'-9 SIMPLE SPAN

NE WINGWALL DETAILS

STA. 1503+40.88, BASELINE U.S. 67 RAMP A — TBD

SCOTT COUNTY

IOWA DEPARTMENT OF TRANSPORTATION - HIGHWAY DIVISION

DESIGN SHEET NO. 6 OF 42 FILE NO. 30253 DESIGN NO. 3808

benesch engineers · scientists · planners
Alfred Benesch & Company
205 North Michigan Avenue, Suite 2400
Chicago, Illinois 60601
312-565-0450 Job No. 10061

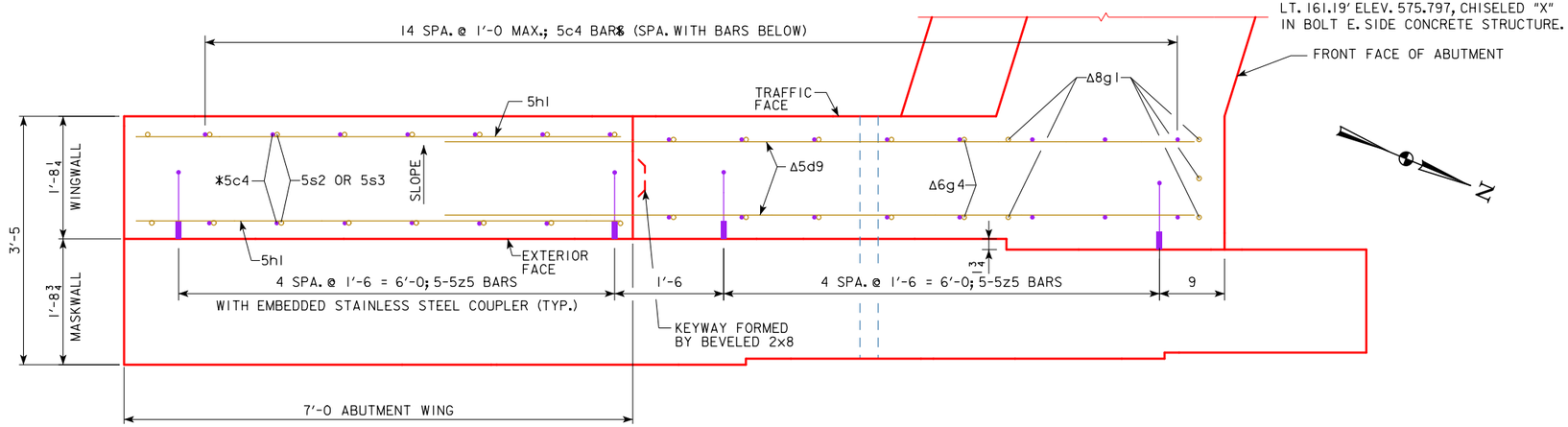

** SEE DESIGN SHEET 24 FOR PVC PIPE LOCATION.

* REINFORCING BARS 5c4 ARE TO BE PLACED WITH ABUTMENT WINGWALL AND ARE INCLUDED IN THE SUPERSTRUCTURE QUANTITIES.

Δ REINFORCING BARS 5d9, 8g1, 6g4 & 5h2 ARE TO BE PLACED WITH ABUTMENT AND ARE INCLUDED IN THE ABUTMENT QUANTITIES.

VIEW A-A

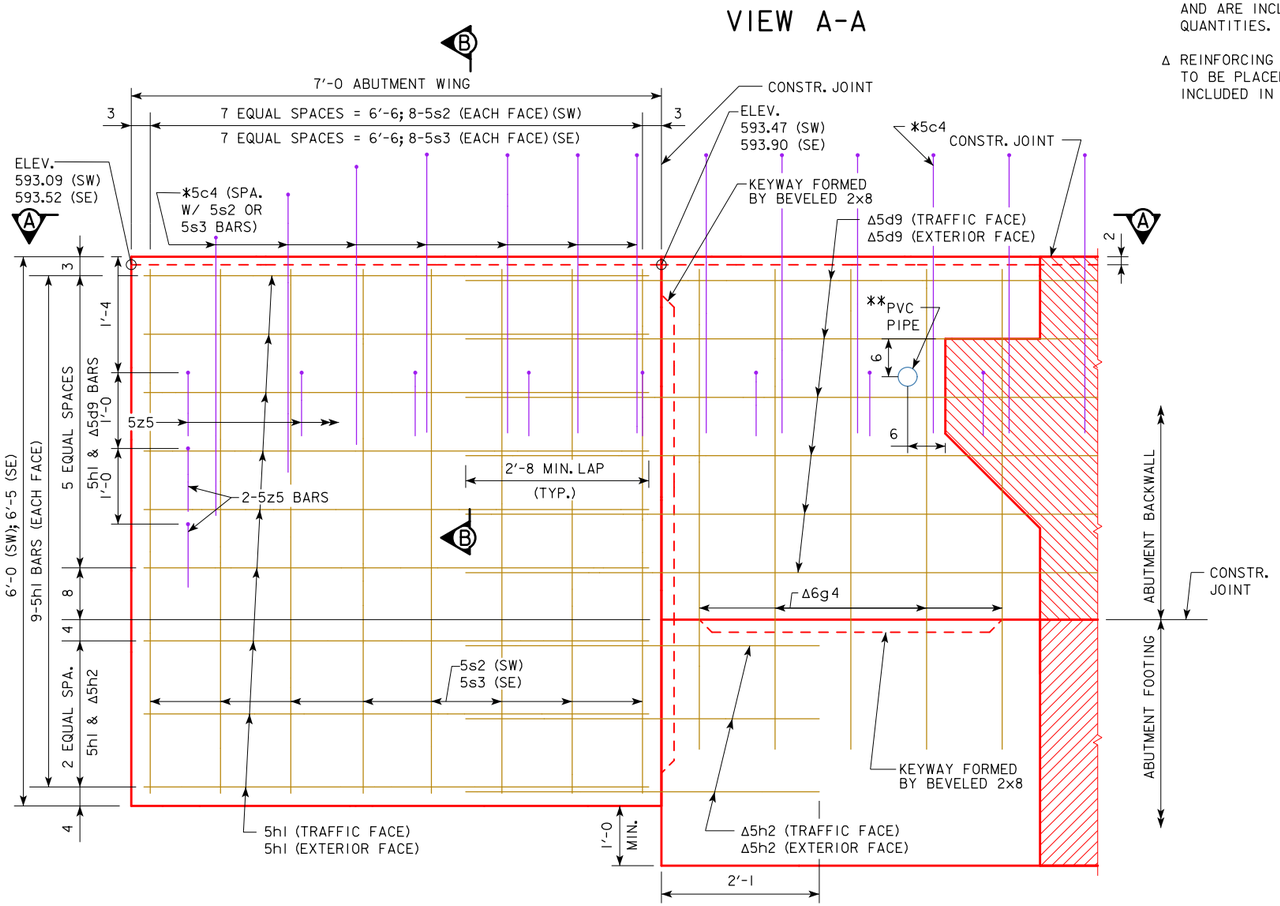

ABUTMENT WING - ELEVATION VIEW - SOUTHEAST WING

(SOUTHWEST WING SIMILAR)

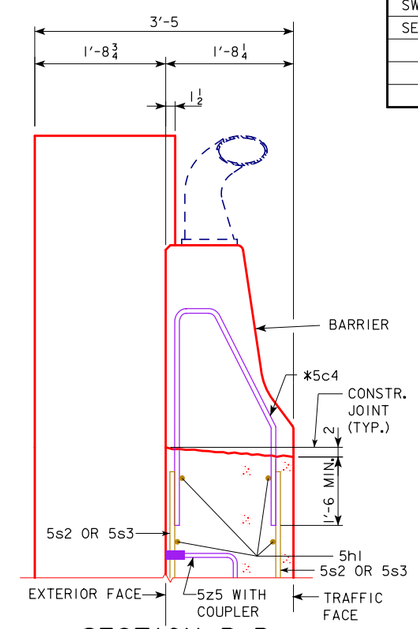

SECTION B-B

FOR DETAILS OF CONCRETE BARRIER RAIL, SEE DESIGN SHEETS 31 THRU 34.

FOR DETAILS OF MASKWALLS, SEE DESIGN SHEETS 9 THRU 12 .

EPOXY REINF. BAR LIST - TWO ABUT. WINGS

BAR	LOCATION	SHAPE	NO.	LENGTH	WEIGHT
5h1-A	HORIZONTAL BOTH FACES		36	6'-8	250
5s2-A	VERTICAL BOTH FACES (SW CORNER)		16	5'-7	93
5s3-A	VERTICAL BOTH FACES (SE CORNER)		16	6'-0	100
			TOTAL (LBS.)		443

STAINLESS REINF. BAR LIST - TWO ABUT. WINGS

BAR	LOCATION	SHAPE	NO.	LENGTH	WEIGHT
5z5-A	HORIZONTAL TIE		24	1'-9	44
			TOTAL (LBS.)		44

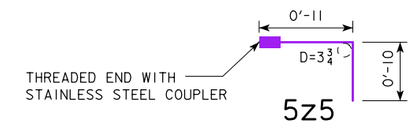

NOTE: ALL DIMENSIONS ARE OUT TO OUT. D = PIN DIAMETER.

BENT BAR DETAILS

CONCRETE PLACEMENT SUMMARY

STRUCTURAL CONCRETE (BRIDGE)	TOTAL
SW CORNER ABUTMENT WINGWALL	2.6
SE CORNER ABUTMENT WINGWALL	2.8
2 ABUTMENT WINGWALLS = TOTAL (CU. YDS.)	5.4

NOTES:

REINFORCING STEEL QUANTITY AND CONCRETE QUANTITY ARE TO BE ADDED TO THE SUPERSTRUCTURE QUANTITIES SHOWN ELSEWHERE IN THESE PLANS.

DESIGNATION "-A" SIGNIFIES BAR ASSOCIATED WITH THE RAMP A BRIDGE. "-A" NOT SHOWN IN DETAILS FOR CLARITY.

CONSTRUCTION JOINT KEYWAYS ARE TO BE FORMED WITH BEVELED 2 x 8's, EXCEPT AS NOTED.

ELEVATIONS TAKEN AT TRAFFIC FACE.

DESIGN FOR 9°41'0" SKEW (L.A.)

134'-9 x 40'-0 WELDED GIRDER BRIDGE

134'-9 SIMPLE SPAN

SW & SE WINGWALL DETAILS

STA. 1503+40.88, BASELINE U.S. 67 RAMP A — TBD

SCOTT COUNTY

IOWA DEPARTMENT OF TRANSPORTATION - HIGHWAY DIVISION

DESIGN SHEET NO. 7 OF 42 FILE NO. 30253 DESIGN NO. 3808

benesch engineers · scientists · planners
Alfred Benesch & Company
205 North Michigan Avenue, Suite 2400
Chicago, Illinois 60601
312-565-0450 Job No. 10061

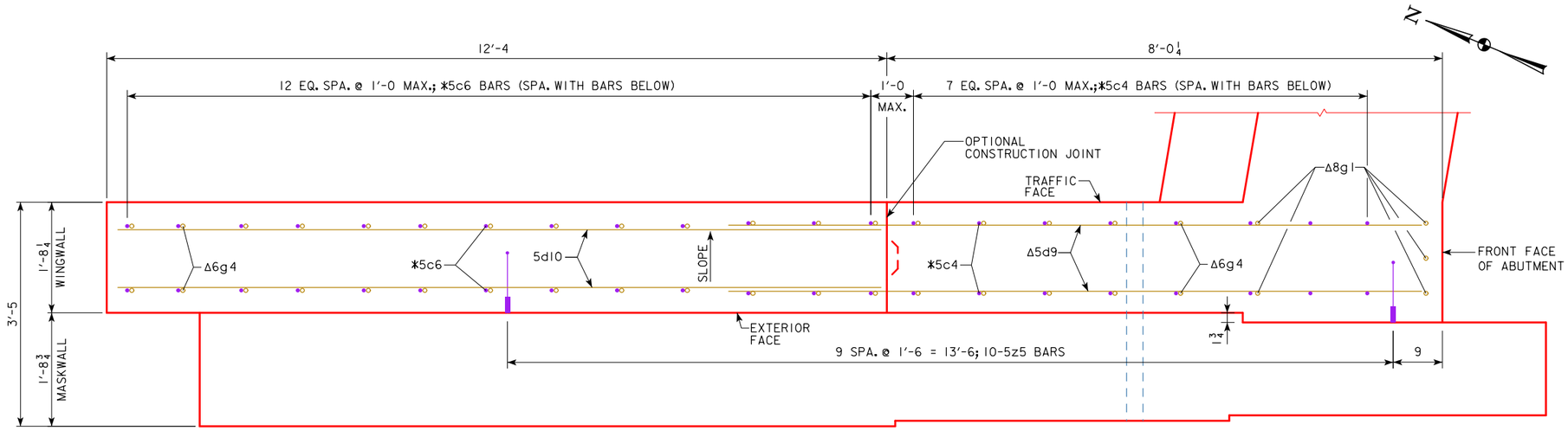

VIEW A-A

** SEE DESIGN SHEET 24 FOR PVC PIPE LOCATION.

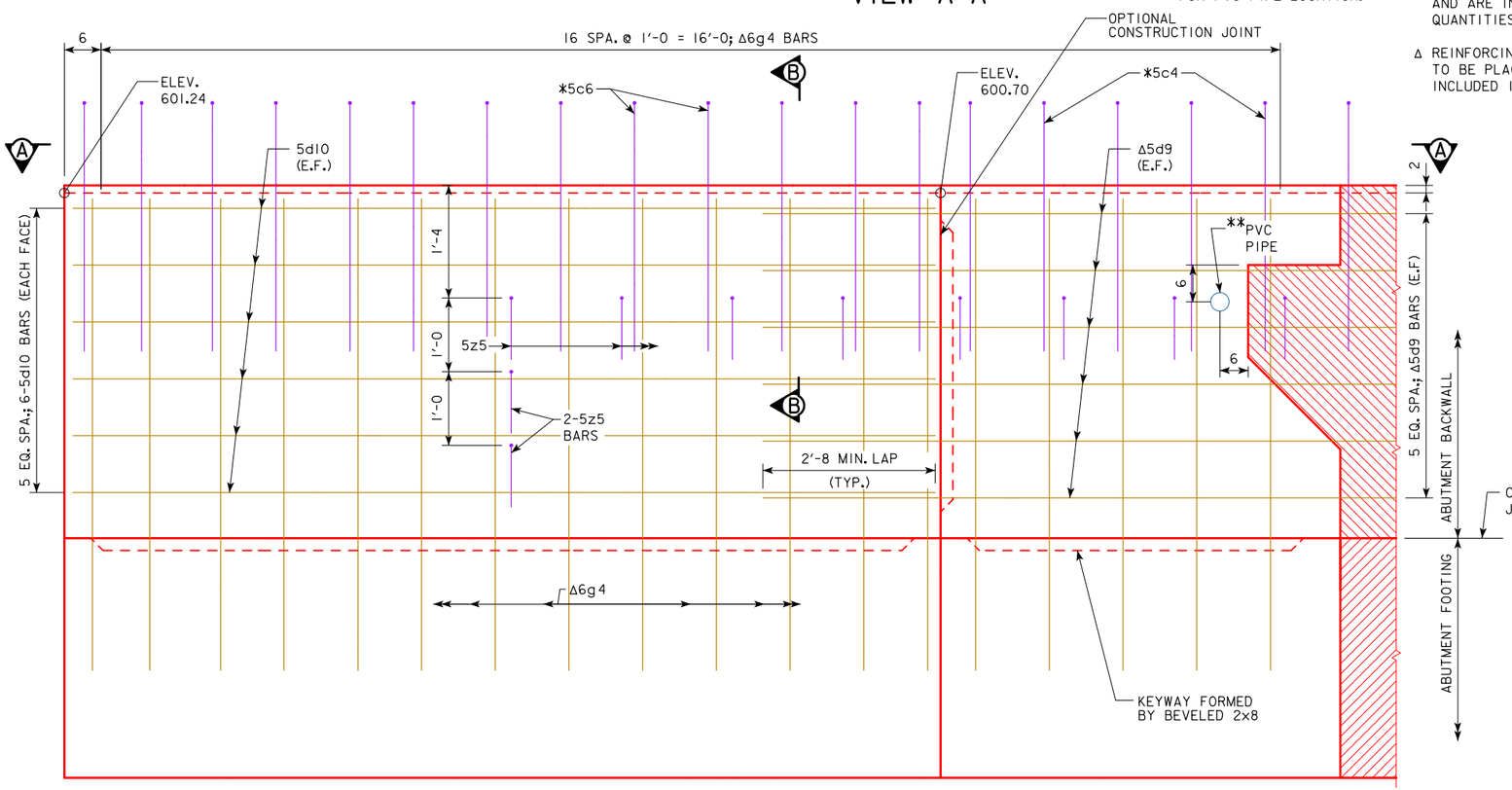

ABUTMENT WING - ELEVATION VIEW - NORTHWEST WING

* REINFORCING BARS 5c4 & 5c6 ARE TO BE PLACED WITH ABUTMENT WINGWALL AND ARE INCLUDED IN THE SUPERSTRUCTURE QUANTITIES.

Δ REINFORCING BARS 5d9, 8g1,& 6g4 ARE TO BE PLACED WITH ABUTMENT AND ARE INCLUDED IN THE ABUTMENT QUANTITIES.

NOTES:

REINFORCING BAR LIST IS FOR ONE ABUTMENT WING.

REINFORCING STEEL QUANTITY IS TO BE ADDED TO THE SUPERSTRUCTURE QUANTITIES SHOWN ELSEWHERE IN THESE PLANS.

DESIGNATION "-A" SIGNIFIES BAR ASSOCIATED WITH THE RAMP A BRIDGE. "-A" NOT SHOWN IN DETAILS FOR CLARITY.

CONSTRUCTION JOINT KEYWAYS ARE TO BE FORMED WITH BEVELED 2 x 8's, EXCEPT AS NOTED.

ELEVATIONS TAKEN AT TRAFFIC FACE.

EPOXY REINF. BAR LIST

BAR	LOCATION	SHAPE	NO.	LENGTH	WEIGHT
5d10-A	HORIZ. BOTH FACES		12	12'-0	150
				TOTAL (LBS.)	150

STAINLESS REINF. BAR LIST

BAR	LOCATION	SHAPE	NO.	LENGTH	WEIGHT
5z5-A	HORIZONTAL TIE		12	1'-9	22
				TOTAL (LBS.)	22

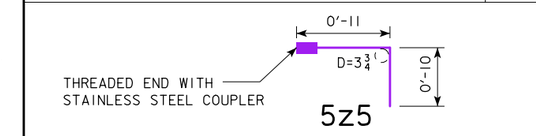

NOTE: ALL DIMENSIONS ARE OUT TO OUT. D = PIN DIAMETER.

BENT BAR DETAILS

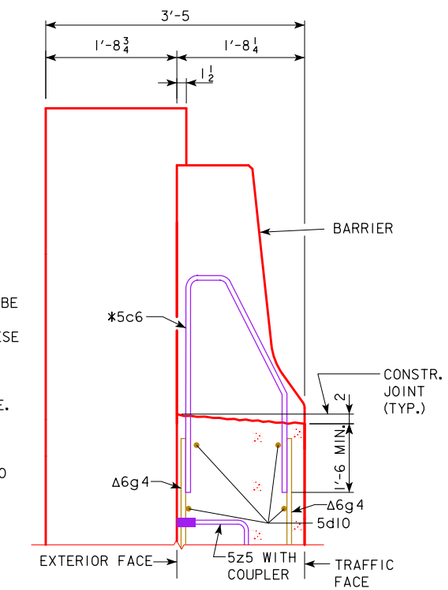

SECTION B-B

FOR DETAILS OF CONCRETE BARRIER RAIL, SEE DESIGN SHEETS 32 THRU 34.

FOR DETAILS OF MASKWALLS, SEE DESIGN SHEETS 15 & 16 .

DESIGN FOR 9°41'0" SKEW (L.A.)

134'-9 x 40'-0 WELDED GIRDER BRIDGE

134'-9 SIMPLE SPAN

NW WINGWALL DETAILS

STA. 1503+40.88, BASELINE U.S. 67 RAMP A TBD

SCOTT COUNTY

IOWA DEPARTMENT OF TRANSPORTATION - HIGHWAY DIVISION

DESIGN SHEET NO. 8 OF 42 FILE NO. 30253 DESIGN NO. 3808

benesch engineers · scientists · planners
Alfred Benesch & Company
205 North Michigan Avenue, Suite 2400
Chicago, Illinois 60601
312-565-0450 Job No. 10061

BENCH MARK NO. 500: STA. 6781+18.92 LT. 161.19' ELEV. 575.797, CHISELED "X" IN BOLT E. SIDE CONCRETE STRUCTURE.

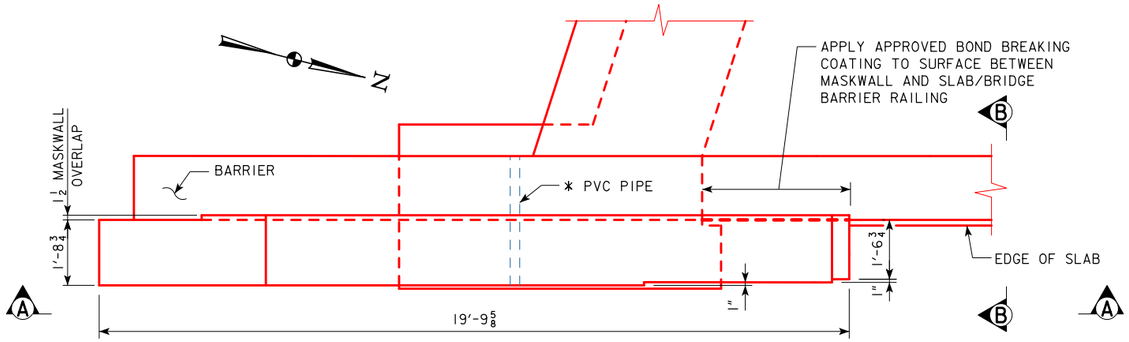

SE MASKWALL PLAN

(STEEL BARRIER RAILING NOT SHOWN)

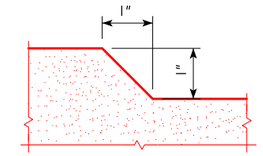

SECTION C-C - CHAMFER

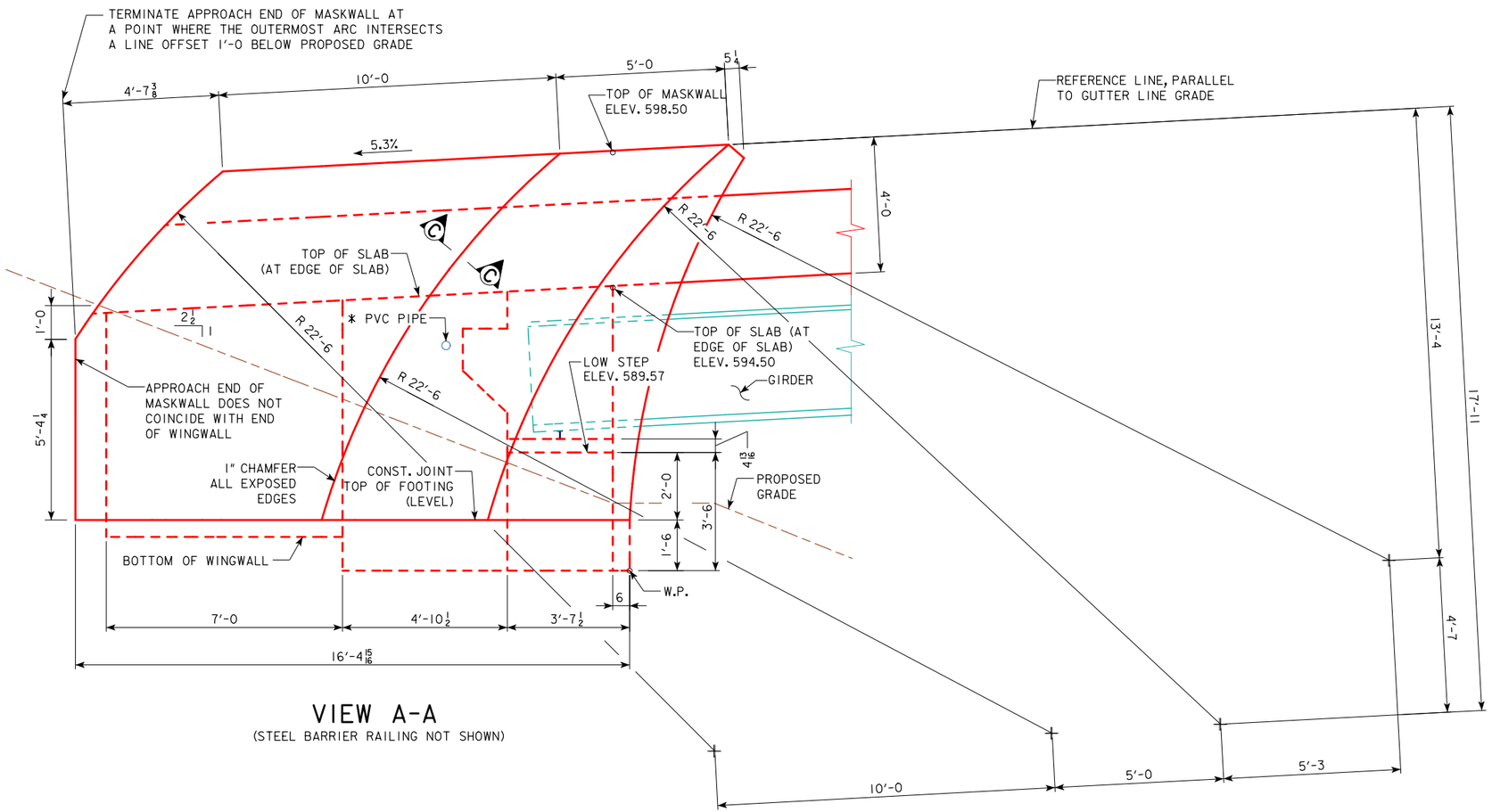

VIEW A-A

(STEEL BARRIER RAILING NOT SHOWN)

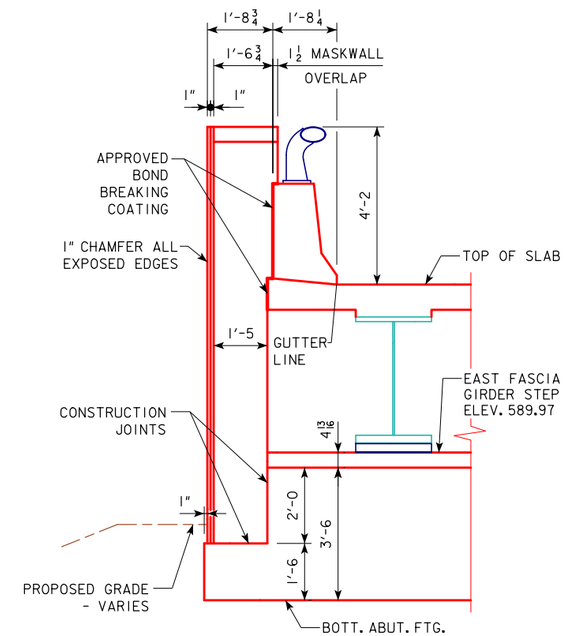

VIEW B-B

NOTES:

* SEE DESIGN SHEET 24 FOR PVC PIPE LOCATION

SEE DESIGN SHEET 10 FOR REINFORCEMENT

DESIGN FOR 9°41'0" SKEW (L.A.)

134'-9 x 40'-0 WELDED GIRDER BRIDGE

134'-9 SIMPLE SPAN

SE MASKWALL DETAILS

STA. 1503+40.88, BASELINE U.S. 67 RAMP A — TBD

SCOTT COUNTY

IOWA DEPARTMENT OF TRANSPORTATION - HIGHWAY DIVISION

DESIGN SHEET NO. 9 OF 42 FILE NO. 30253 DESIGN NO. 3808

benesch engineers · scientists · planners
Alfred Benesch & Company
205 North Michigan Avenue, Suite 2400
Chicago, Illinois 60601
312-565-0450 Job No. 10061

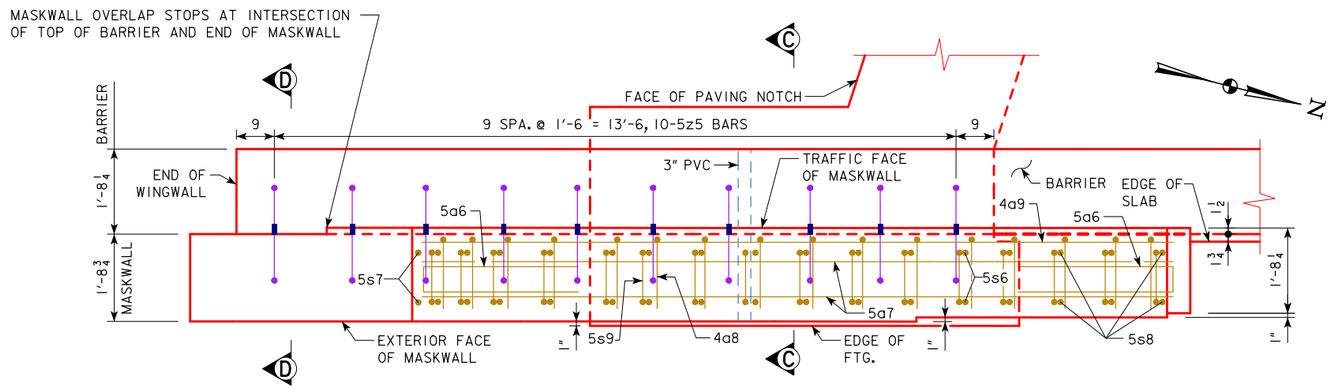

SE MASKWALL PLAN

(STEEL RAILING NOT SHOWN)

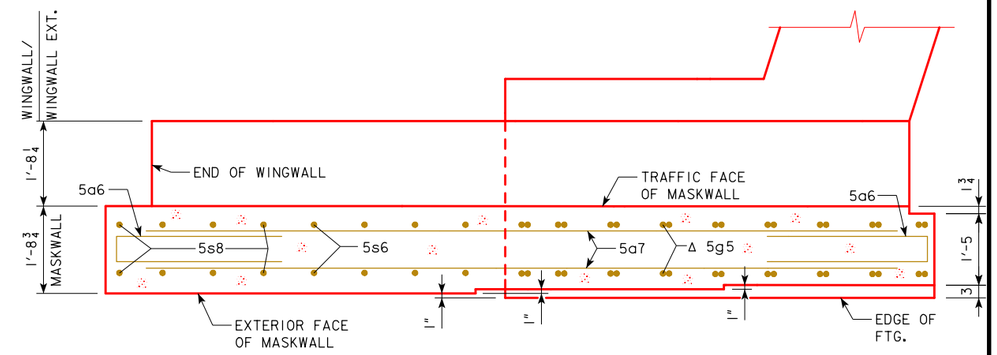

SECTION A-A

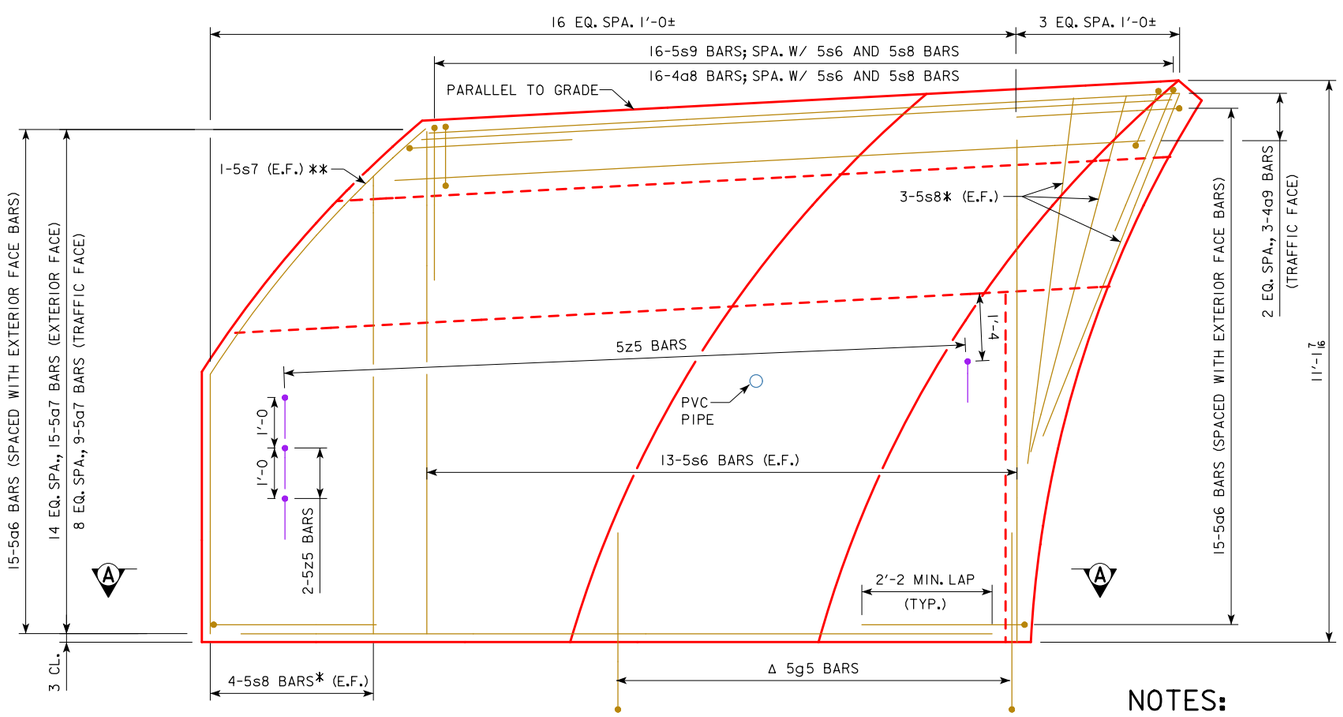

ELEVATION A-A

(STEEL RAILING NOT SHOWN)

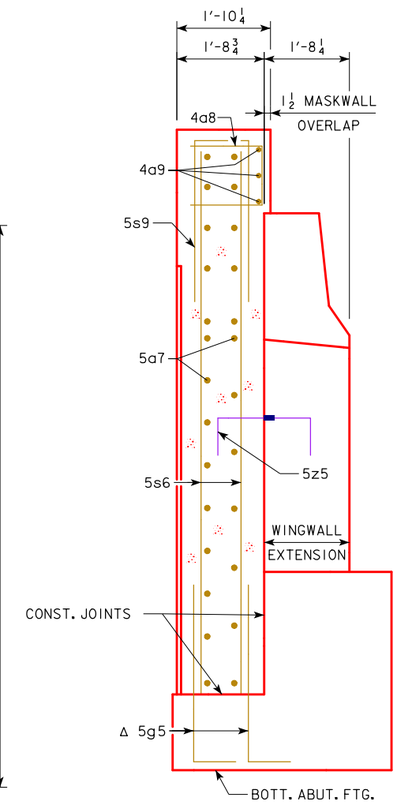

SECTION C-C

(STEEL RAILING NOT SHOWN)

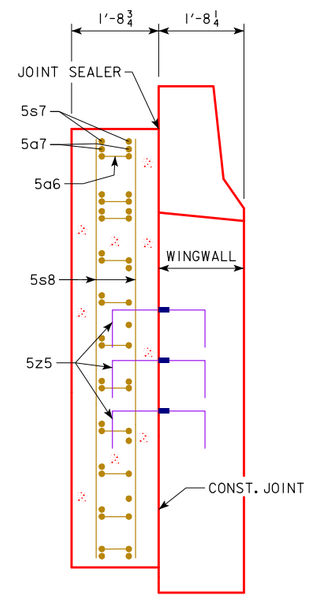

SECTION D-D

NOTES:

SEE DESIGN SHEET 17 FOR BAR LIST AND NOTES.

SEE DESIGN SHEET 4 FOR FOOTING DETAILS.

SEE DESIGN SHEET 7 FOR WINGWALL AND WINGWALL EXTENSION DETAILS.

* CUT IN FIELD AS REQUIRED

** CONTRACTOR MAY BEND IN FIELD

Δ REINFORCING BARS 5g5 ARE TO BE PLACED WITH ABUTMENT AND ARE INCLUDED IN THE ABUTMENT 31A QUANTITIES.

DESIGN FOR 9°41'0" SKEW (L.A.)

134'-9 x 40'-0

WELDED GIRDER BRIDGE

134'-9 SIMPLE SPAN

SE MASKWALL DETAILS

STA. 1503+40.88, BASELINE U.S. 67 RAMP A — TBD

SCOTT COUNTY

IOWA DEPARTMENT OF TRANSPORTATION - HIGHWAY DIVISION

DESIGN SHEET NO. 10 OF 42 FILE NO. 30253 DESIGN NO. 3808

benesch engineers · scientists · planners
Alfred Benesch & Company
205 North Michigan Avenue, Suite 2400
Chicago, Illinois 60601
312-565-0450 Job No. 10061

BENCH MARK NO. 500: STA. 6781+18.92 LT. 161.19' ELEV. 575.797, CHISELED "X" IN BOLT E. SIDE CONCRETE STRUCTURE.

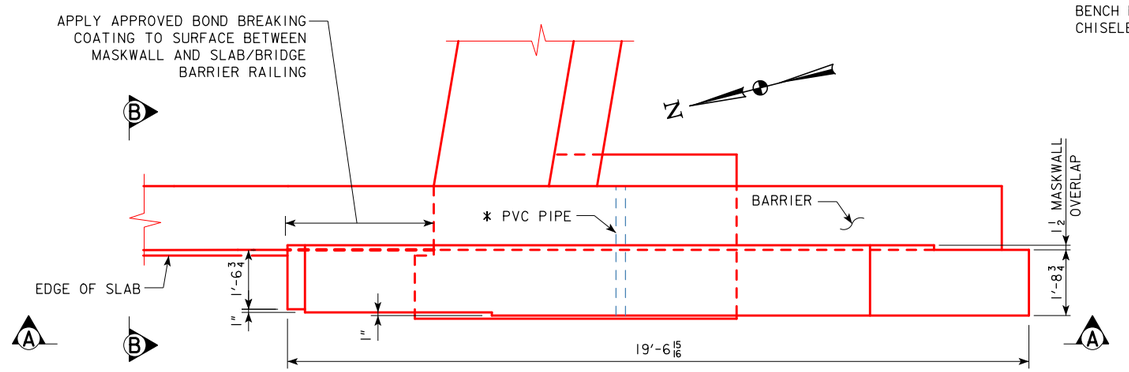

SW MASKWALL PLAN

(STEEL BARRIER RAILING NOT SHOWN)

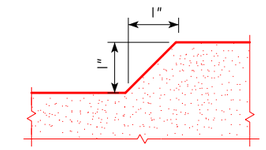

SECTION C-C - CHAMFER

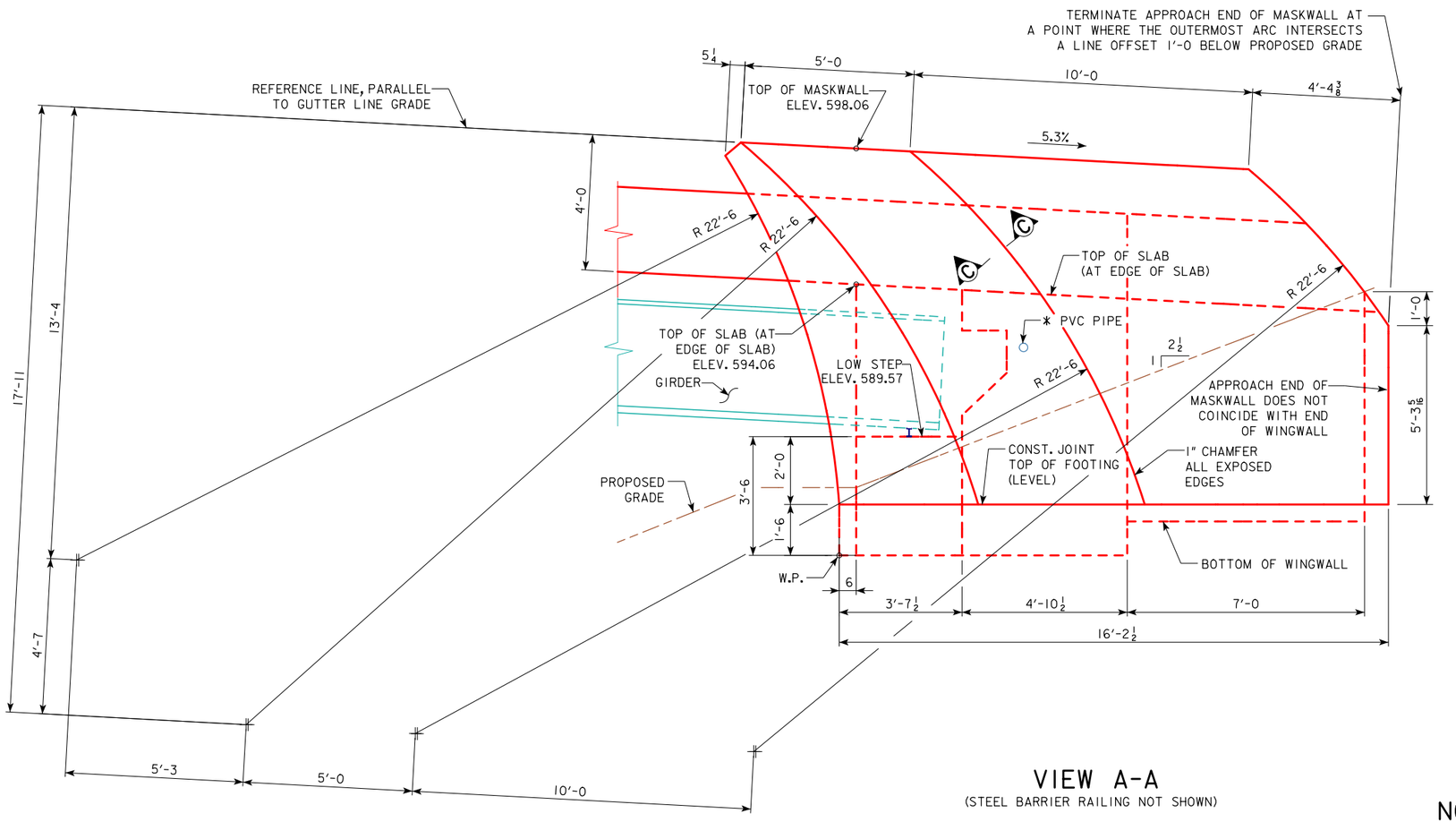

VIEW A-A

(STEEL BARRIER RAILING NOT SHOWN)

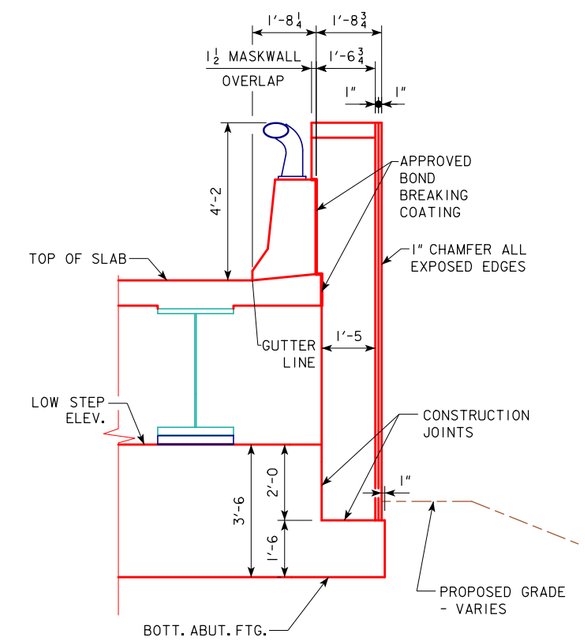

VIEW B-B

NOTES:

* SEE DESIGN SHEET 24 FOR PVC PIPE LOCATION

SEE DESIGN SHEET 12 FOR REINFORCEMENT

DESIGN FOR 9°41'0" SKEW (L.A.)

134'-9 x 40'-0 WELDED GIRDER BRIDGE

134'-9 SIMPLE SPAN

SW MASKWALL DETAILS

STA. 1503+40.88, BASELINE U.S. 67 RAMP A — TBD

SCOTT COUNTY

IOWA DEPARTMENT OF TRANSPORTATION - HIGHWAY DIVISION

DESIGN SHEET NO. 11 OF 42 FILE NO. 30253 DESIGN NO. 3808

benesch engineers · scientists · planners
Alfred Benesch & Company
205 North Michigan Avenue, Suite 2400
Chicago, Illinois 60601
312-565-0450 Job No. 10061

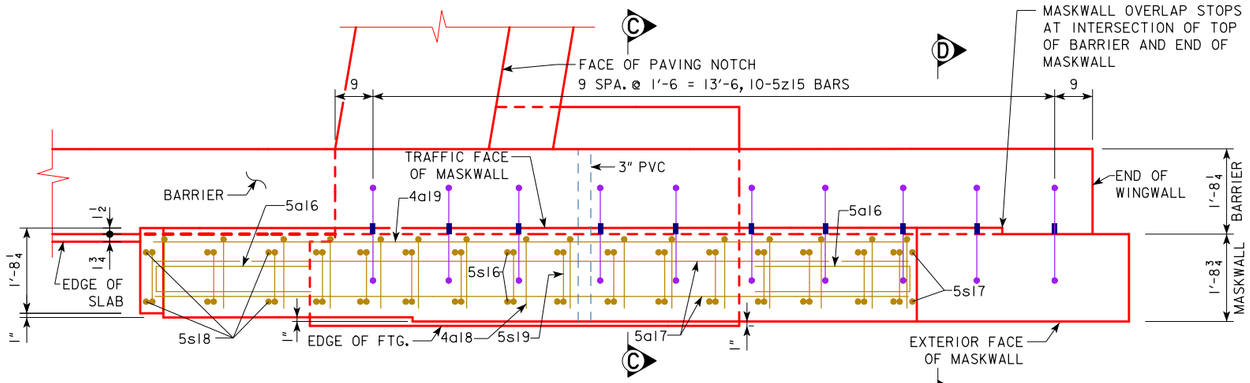

SW MASKWALL PLAN
(STEEL BARRIER RAILING NOT SHOWN)

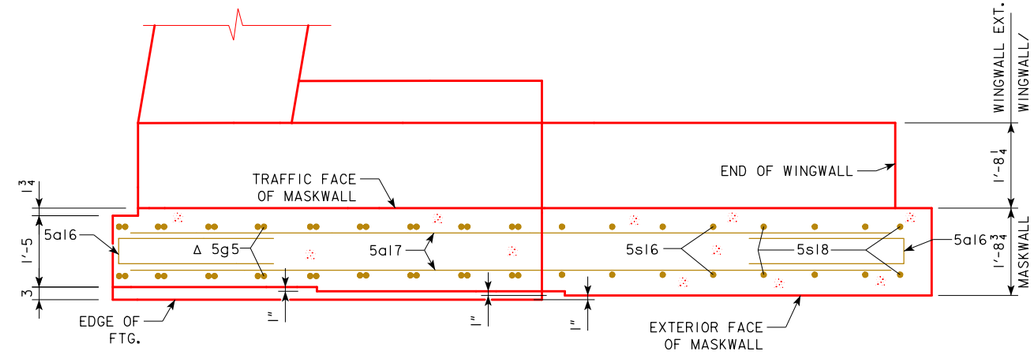

SECTION A-A

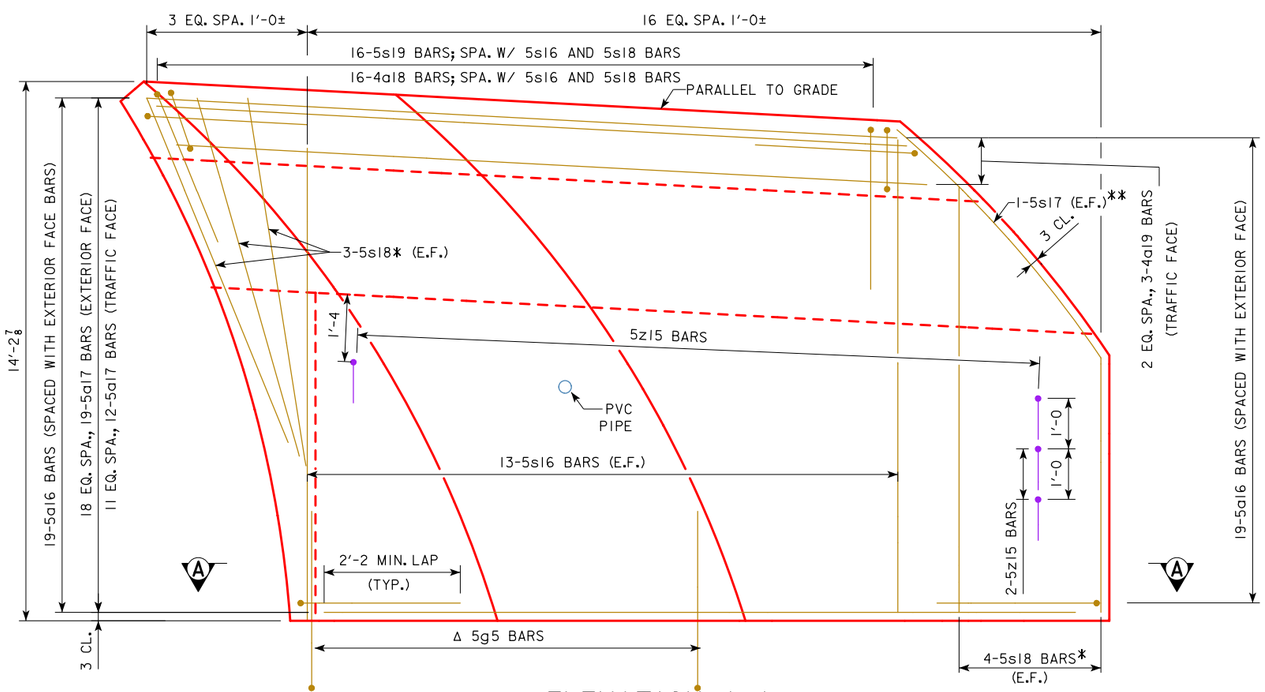

ELEVATION A-A
(STEEL BARRIER RAILING NOT SHOWN)

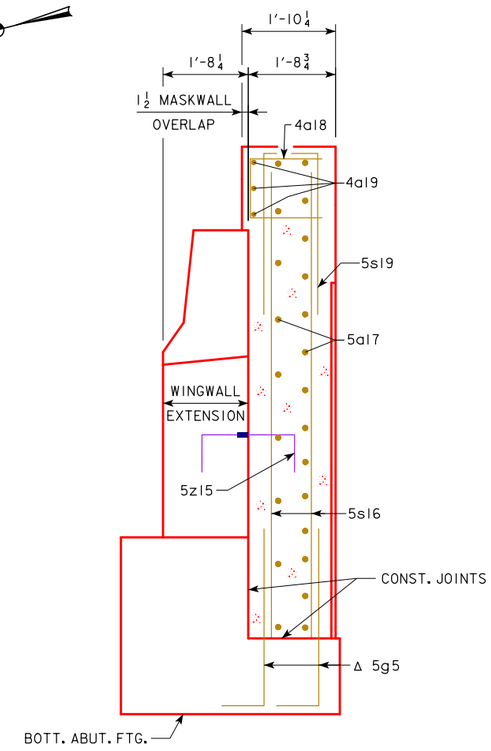

SECTION C-C
(STEEL BARRIER RAILING NOT SHOWN)

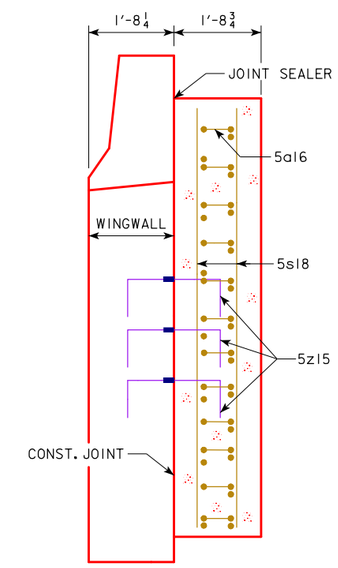

SECTION D-D

NOTES:

SEE DESIGN SHEET 17 FOR BAR LIST AND NOTES.

SEE DESIGN SHEET 4 FOR FOOTING DETAILS.

SEE DESIGN SHEET 7 FOR WINGWALL AND WINGWALL EXTENSION DETAILS.

* CUT IN FIELD AS REQUIRED

** CONTRACTOR MAY BEND IN FIELD

Δ REINFORCING BARS 5g5 ARE TO BE PLACED WITH ABUTMENT AND ARE INCLUDED IN THE ABUTMENT 31A QUANTITIES.

DESIGN FOR 9°41'0" SKEW (L.A.)

134'-9 x 40'-0
WELDED GIRDER BRIDGE

134'-9 SIMPLE SPAN

SW MASKWALL DETAILS

STA. 1503+40.88, BASELINE U.S. 67 RAMP A — TBD

SCOTT COUNTY

IOWA DEPARTMENT OF TRANSPORTATION - HIGHWAY DIVISION

DESIGN SHEET NO. 12 OF 42 FILE NO. 30253 DESIGN NO. 3808

benesch engineers · scientists · planners
Alfred Benesch & Company
205 North Michigan Avenue, Suite 2400
Chicago, Illinois 60601
312-565-0450 Job No. 10061

BENCH MARK NO. 500: STA. 6781+18.92 LT. 161.19' ELEV. 575.797, CHISELED "X" IN BOLT E. SIDE CONCRETE STRUCTURE.

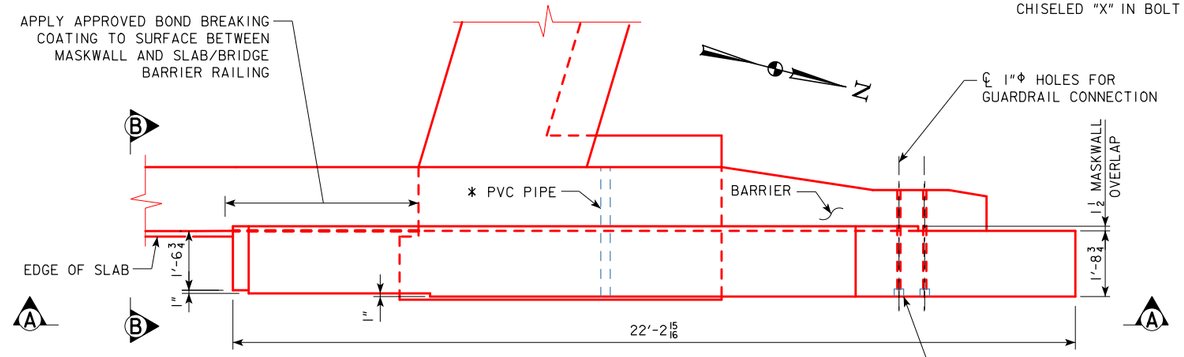

NE MASKWALL PLAN
(STEEL BARRIER RAILING NOT SHOWN)

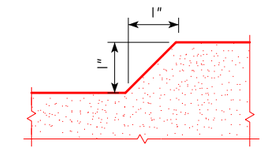

SECTION C-C - CHAMFER

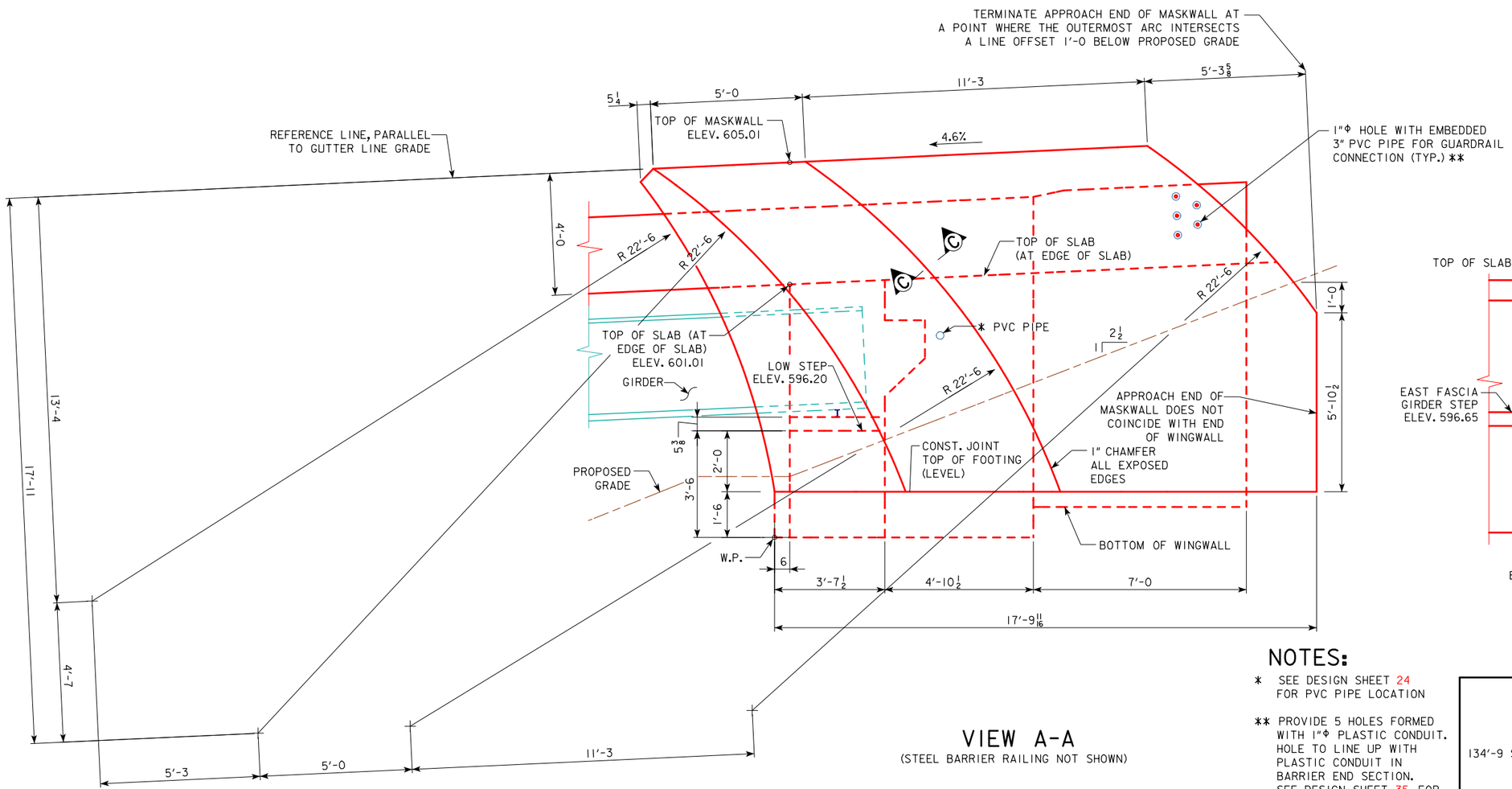

VIEW A-A
(STEEL BARRIER RAILING NOT SHOWN)

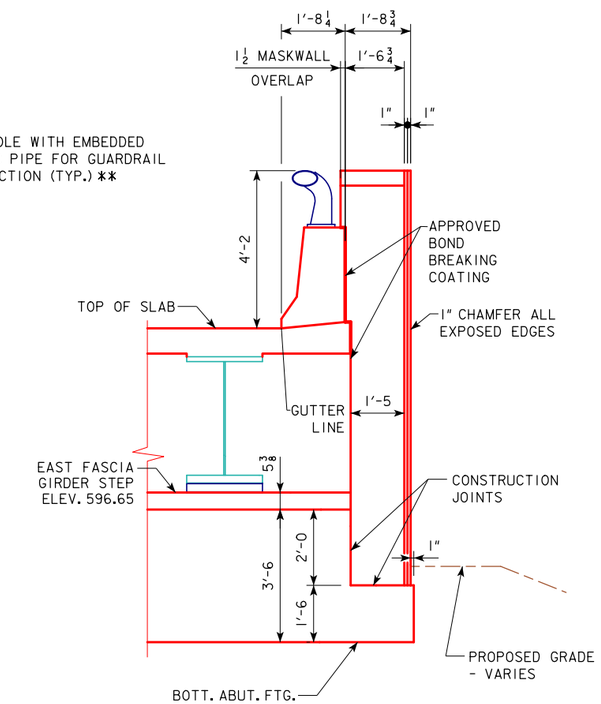

VIEW B-B

NOTES:

* SEE DESIGN SHEET 24 FOR PVC PIPE LOCATION

** PROVIDE 5 HOLES FORMED WITH 1"Φ PLASTIC CONDUIT. HOLE TO LINE UP WITH PLASTIC CONDUIT IN BARRIER END SECTION. SEE DESIGN SHEET 35 FOR LOCATION OF HOLES.

SEE DESIGN SHEET 14 FOR REINFORCEMENT

DESIGN FOR 9°41'0" SKEW (L.A.)

134'-9 x 40'-0 WELDED GIRDER BRIDGE

134'-9 SIMPLE SPAN

NE MASKWALL DETAILS

STA. 1503+40.88, BASELINE U.S. 67 RAMP A — TBD

SCOTT COUNTY

IOWA DEPARTMENT OF TRANSPORTATION - HIGHWAY DIVISION

DESIGN SHEET NO. 13 OF 42 FILE NO. 30253 DESIGN NO. 3808

benesch engineers · scientists · planners
Alfred Benesch & Company
205 North Michigan Avenue, Suite 2400
Chicago, Illinois 60601
312-565-0450 Job No. 10061

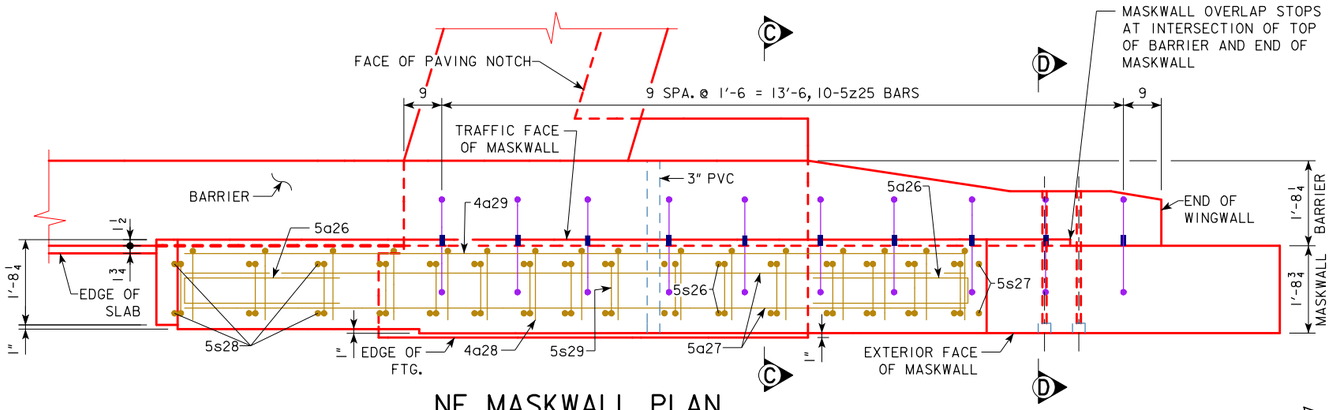

NE MASKWALL PLAN
(STEEL BARRIER RAILING NOT SHOWN)

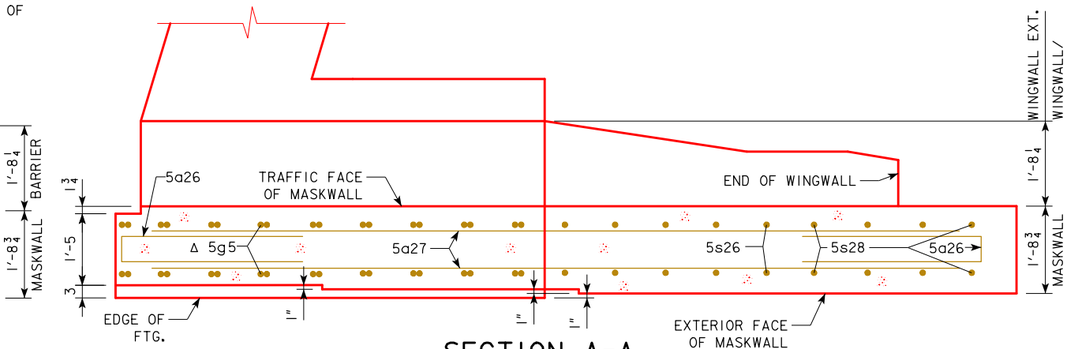

SECTION A-A

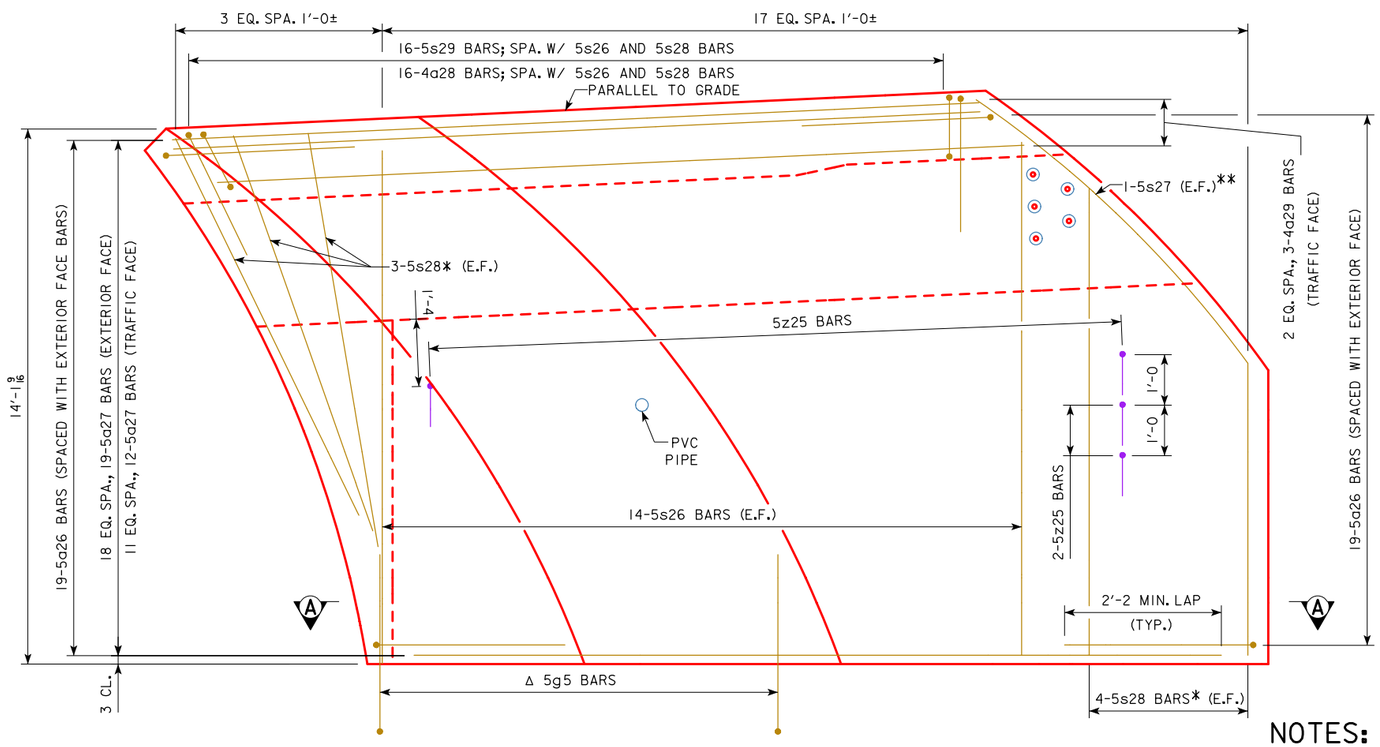

ELEVATION A-A
(STEEL BARRIER RAILING NOT SHOWN)

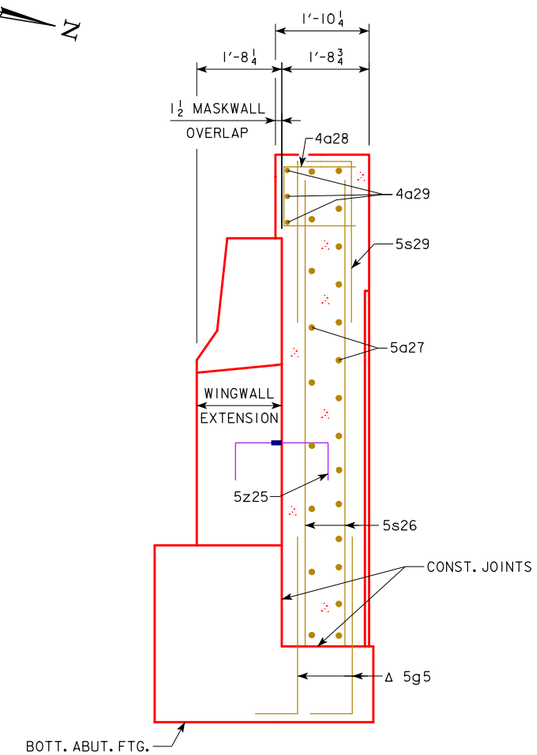

SECTION C-C
(STEEL BARRIER RAILING NOT SHOWN)

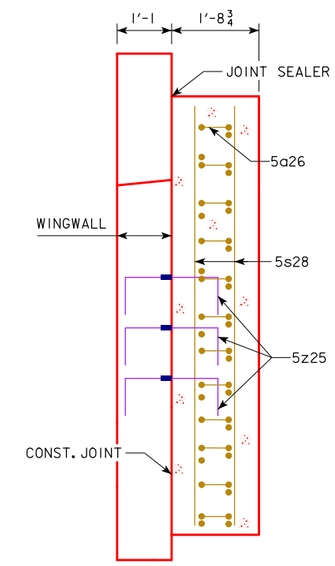

SECTION D-D

NOTES:

SEE DESIGN SHEET 17 & 18 FOR BAR LIST AND NOTES.

SEE DESIGN SHEET 5 FOR FOOTING DETAILS.

SEE DESIGN SHEET 6 FOR WINGWALL AND WINGWALL EXTENSION DETAILS.

* CUT IN FIELD AS REQUIRED

** CONTRACTOR MAY BEND IN FIELD

Δ REINFORCING BARS 5g5 ARE TO BE PLACED WITH ABUTMENT AND ARE INCLUDED IN THE ABUTMENT 32A QUANTITIES.

DESIGN FOR 9°41'0" SKEW (L.A.)

134'-9 x 40'-0
WELDED GIRDER BRIDGE

134'-9 SIMPLE SPAN

NE MASKWALL DETAILS

STA. 1503+40.88, BASELINE U.S. 67 RAMP A TBD

SCOTT COUNTY

IOWA DEPARTMENT OF TRANSPORTATION - HIGHWAY DIVISION

DESIGN SHEET NO. 14 OF 42 FILE NO. 30253 DESIGN NO. 3808

benesch
engineers · scientists · planners
Alfred Benesch & Company
205 North Michigan Avenue, Suite 2400
Chicago, Illinois 60601
312-565-0450 Job No. 10061

BENCH MARK NO. 500: STA. 6781+18.92 LT. 161.19' ELEV. 575.797,
CHISELED "X" IN BOLT E. SIDE CONCRETE STRUCTURE.

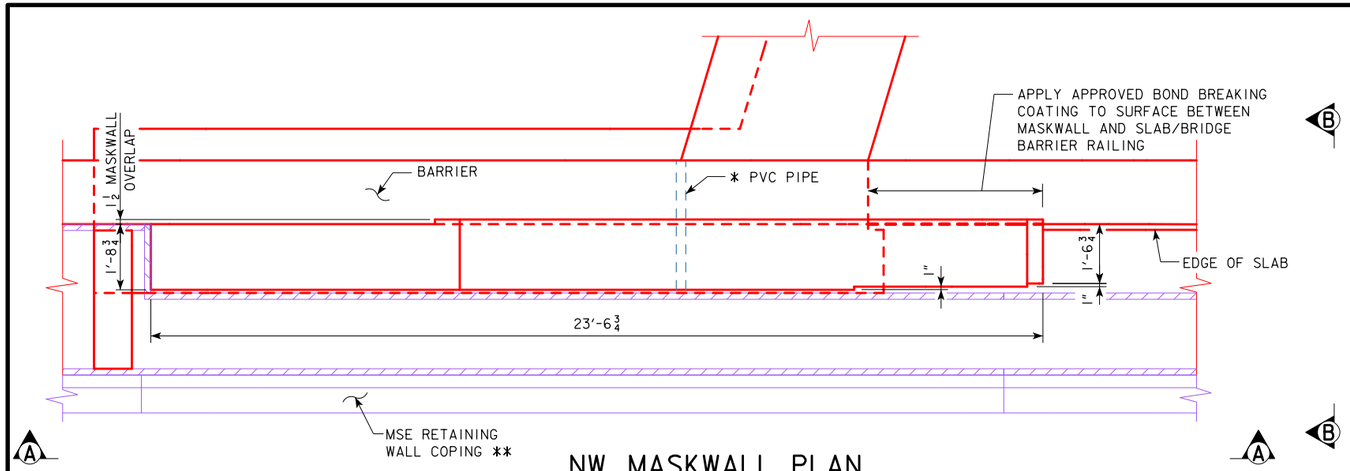

NW MASKWALL PLAN
(STEEL BARRIER RAILING NOT SHOWN)

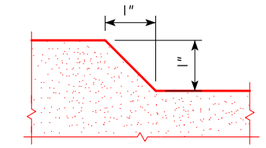

SECTION C-C - CHAMFER

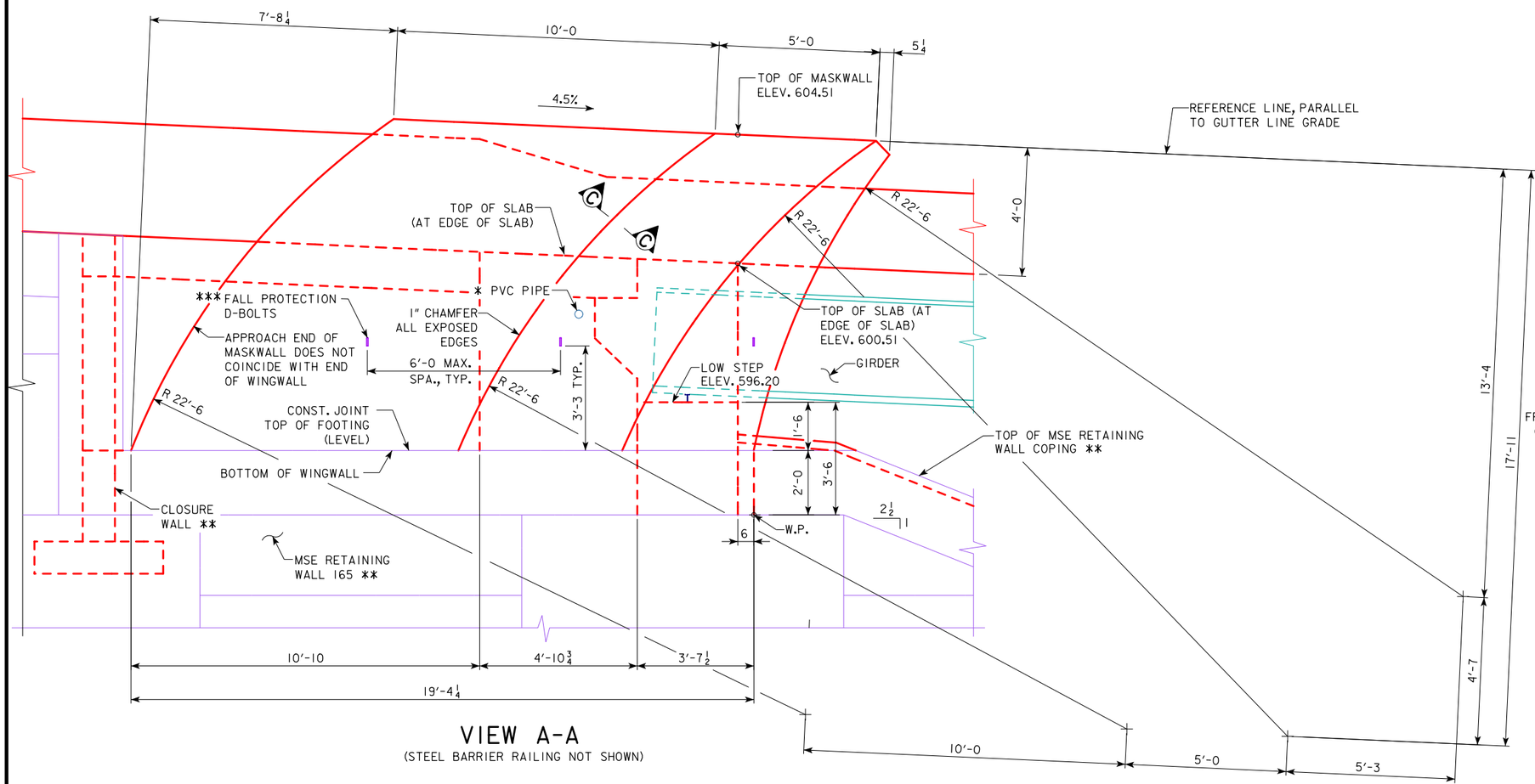

VIEW A-A
(STEEL BARRIER RAILING NOT SHOWN)

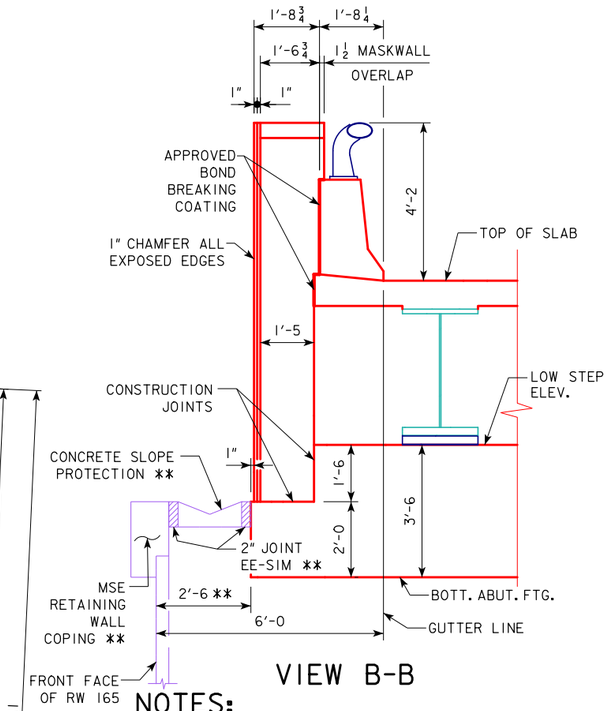

VIEW B-B

NOTES:

SEE DESIGN SHEET 16 FOR REINFORCEMENT.

* SEE DESIGN SHEET 24 FOR PVC PIPE LOCATION.

** MSE RETAINING WALL, INCLUDING COPING, CLOSURE WALL AND CONCRETE SLOPE PROTECTION, BY OTHERS. SEE PROJECT IM-074-1(206)5--13-82.

*** FALL PROTECTION D-BOLTS SHALL BE IN ACCORDANCE WITH ANSI/ASSE Z359, OSHA 196.500 AND 1926.502, AND SHALL HAVE MINIMUM PULLOUT STRENGTH OF 5000 LBS. THE COST OF FURNISHING AND INSTALLING D-BOLTS IS TO BE INCLUDED WITH THE PRICE BID FOR "HIGH PERFORMANCE STRUCTURAL CONCRETE".

DESIGN FOR 9°41'0" SKEW (L.A.)

134'-9 x 40'-0
WELDED GIRDER BRIDGE

134'-9 SIMPLE SPAN

NW MASKWALL DETAILS

STA. 1503+40.88, BASELINE U.S. 67 RAMP A TBD

SCOTT COUNTY

IOWA DEPARTMENT OF TRANSPORTATION - HIGHWAY DIVISION

DESIGN SHEET NO. 15 OF 42 FILE NO. 30253 DESIGN NO. 3808

benesch engineers · scientists · planners
Alfred Benesch & Company
205 North Michigan Avenue, Suite 2400
Chicago, Illinois 60601
312-565-0450 Job No. 10061

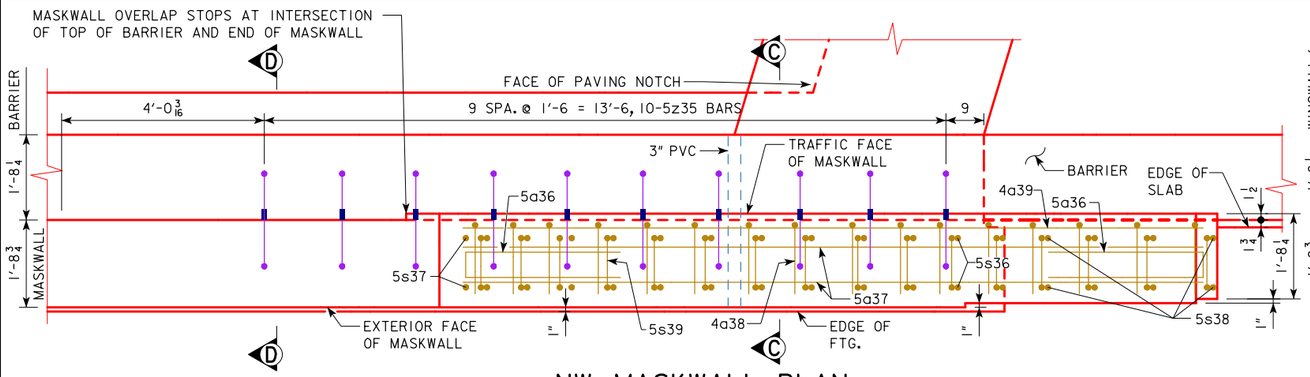

NW MASKWALL PLAN
(STEEL RAILING NOT SHOWN)

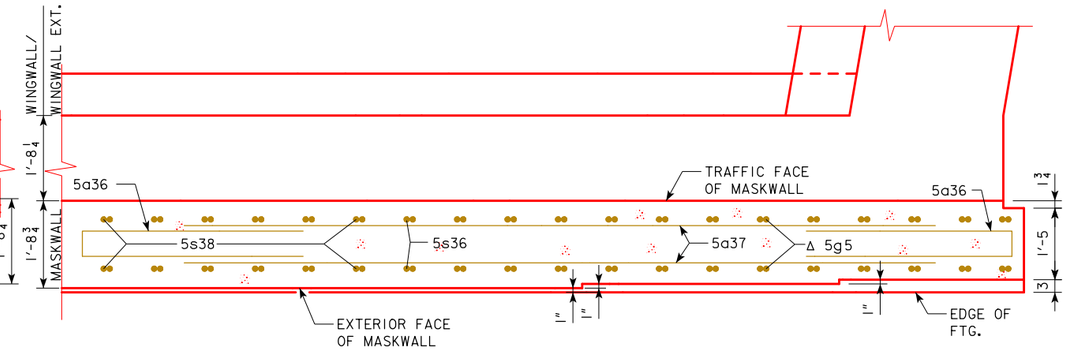

SECTION A-A

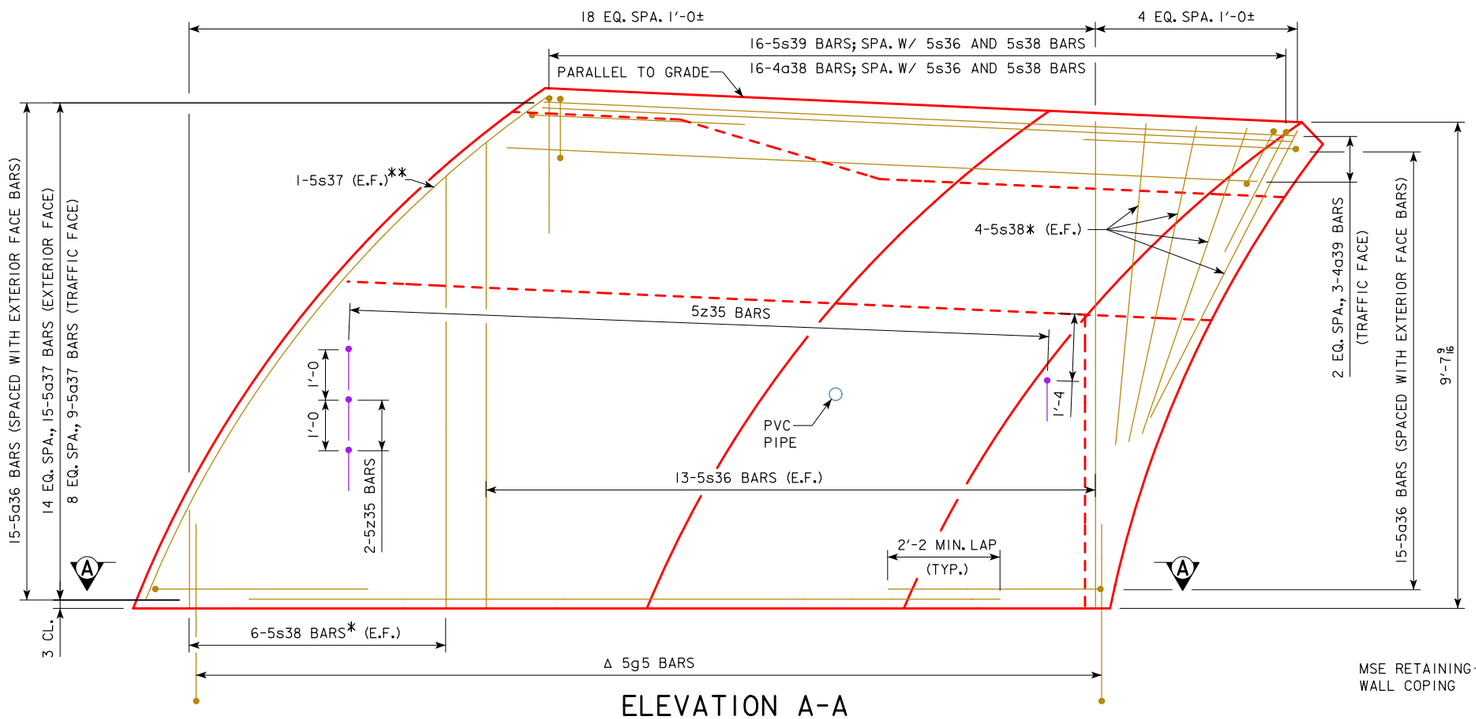

ELEVATION A-A
(STEEL RAILING NOT SHOWN)

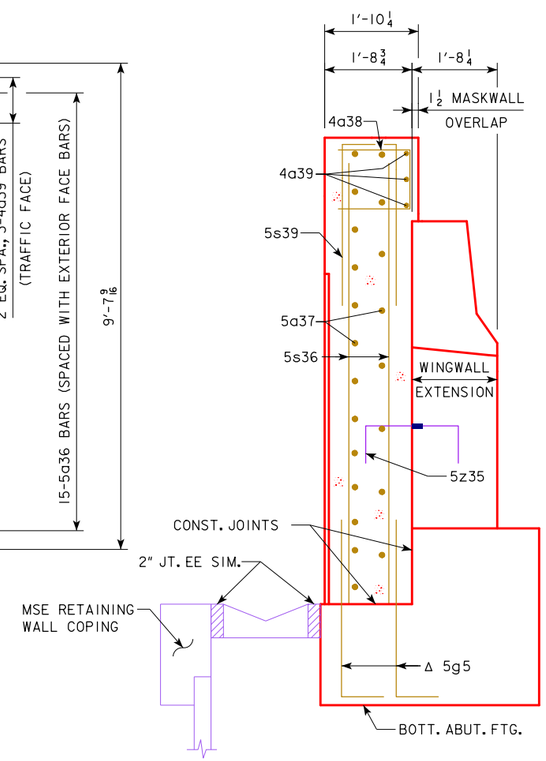

SECTION C-C
(STEEL RAILING NOT SHOWN)

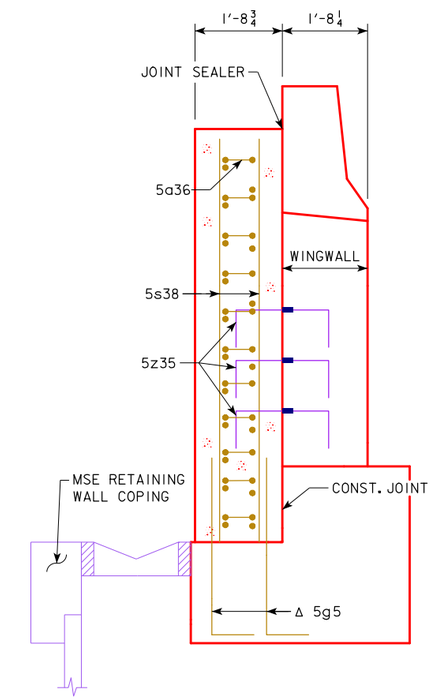

SECTION D-D

NOTES:

SEE DESIGN SHEET 17 & 18 FOR BAR LIST AND NOTES.

SEE DESIGN SHEET 5 FOR FOOTING DETAILS.

SEE DESIGN SHEET 8 FOR WINGWALL AND WINGWALL EXTENSION DETAILS.

* CUT IN FIELD AS REQUIRED

** CONTRACTOR MAY BEND IN FIELD

Δ REINFORCING BARS 5g5 ARE TO BE PLACED WITH ABUTMENT AND ARE INCLUDED IN THE ABUTMENT 32A QUANTITIES.

benesch engineers · scientists · planners
Alfred Benesch & Company
205 North Michigan Avenue, Suite 2400
Chicago, Illinois 60601
312-565-0450 Job No. 10061

DESIGN FOR 9°41'0" SKEW (L.A.)

134'-9 x 40'-0 WELDED GIRDER BRIDGE

134'-9 SIMPLE SPAN

NW MASKWALL DETAILS

STA. 1503+40.88, BASELINE U.S. 67 RAMP A TBD

SCOTT COUNTY

IOWA DEPARTMENT OF TRANSPORTATION - HIGHWAY DIVISION

DESIGN SHEET NO. 16 OF 42 FILE NO. 30253 DESIGN NO. 3808

EPOXY REINF. BAR LIST - SE MASKWALL

BAR	LOCATION	SHAPE	NO.	LENGTH	WEIGHT
5a6-31A	HORIZONTAL END		30	7'-6	235
5a7-31A	HORIZONTAL		24	14'-10	371
4a8-31A	HORIZONTAL TOP		16	4'-0	43
4a9-31A	HORIZONTAL TOP - STRAIGHT		3	14'-10	30
5s6-31A	VERTICAL		26	9'-11	269
5s7-31A	CURVED VERTICAL		2	6'-5	13
5s8-31A	VERTICAL		14	7'-3	106
5s9-31A	VERTICAL TOP		16	7'-3	121
				TOTAL (LBS.)	1188

STAINLESS STEEL REINFORCING BAR LIST - SE MASKWALL

BAR	LOCATION	SHAPE	NO.	LENGTH	WEIGHT
5z5-31A	MASKWALL TIES		12	1'-9	22
				TOTAL (LBS.)	22

HIGH PERFORMANCE STRUCTURAL CONCRETE PLACEMENT SUMMARY

ITEM	UNIT	TOTAL
MASKWALL 1 @ 10.5 CU. YD. (PORTION ABOVE FOOTING)	CU. YD.	10.5

BENT BAR DETAILS

BAR	A	B
5a6	3'-3	0'-11 3/4
5s9	3'-1	1'-1

NOTE: ALL DIMENSIONS ARE OUT TO OUT.
D= PIN DIAMETER.

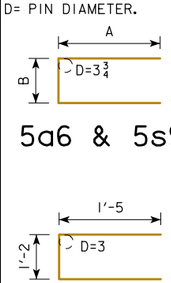

5a6 & 5s9

4a8

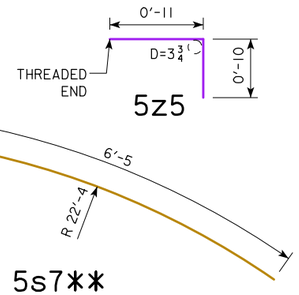

5z5

5s7**

** CONTRACTOR MAY BEND IN FIELD

EPOXY REINF. BAR LIST - SW MASKWALL

BAR	LOCATION	SHAPE	NO.	LENGTH	WEIGHT
5a16-31A	HORIZONTAL END		38	7'-6	297
5a17-31A	HORIZONTAL		31	14'-10	480
4a18-31A	HORIZONTAL TOP		16	4'-0	43
4a19-31A	HORIZONTAL TOP - STRAIGHT		3	14'-10	30
5s16-31A	VERTICAL		26	9'-4	253
5s17-31A	CURVED VERTICAL		2	6'-0	13
5s18-31A	VERTICAL		14	7'-4	107
5s19-31A	VERTICAL TOP		16	7'-7	127
				TOTAL (LBS.)	1349

STAINLESS STEEL REINFORCING BAR LIST - SW MASKWALL

BAR	LOCATION	SHAPE	NO.	LENGTH	WEIGHT
5z15-31A	MASKWALL TIES		12	1'-9	22
				TOTAL (LBS.)	22

HIGH PERFORMANCE STRUCTURAL CONCRETE PLACEMENT SUMMARY

ITEM	UNIT	TOTAL
MASKWALL 1 @ 10.1 CU. YD. (PORTION ABOVE FOOTING)	CU. YD.	10.1

BENT BAR DETAILS

BAR	A	B
5a16	3'-3	0'-11 3/4
5s19	3'-3	1'-1

NOTE: ALL DIMENSIONS ARE OUT TO OUT.
D= PIN DIAMETER.

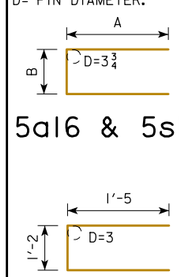

5a16 & 5s19

4a18

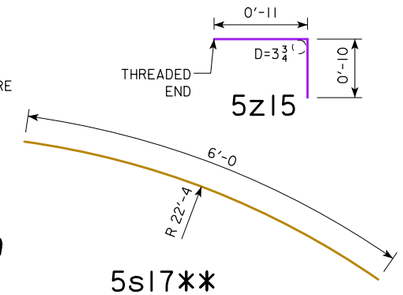

5z15

5s17**

** CONTRACTOR MAY BEND IN FIELD

MASKWALL CONCRETE FINISH NOTES:

IF FORM TIES ARE USED IN FORMING THE MASKWALL, ARRANGE TIES TO BE REGULARLY SPACED AND IN A CONSISTENT GEOMETRIC GRID PATTERN. DO NOT LOCATE TIES AT EDGES OF CONCRETE RUSTUCATIONS.

FOLLOWING FORM REMOVAL, A CLASS 2 STRIP DOWN SURFACE FINISH IN ACCORDANCE WITH ARTICLE 2403, P, 2, B, OF THE STANDARD SPECIFICATIONS SHALL BE REQUIRED BUT WITH THE FOLLOWING ADDITIONAL REQUIREMENTS:

1. DEMONSTRATE HOLE AND VOID PATCHING OPERATIONS IN ACCORDANCE WITH ARTICLE 2403, P, 2, B, OF THE STANDARD SPECIFICATIONS ON A FOUR FOOT SECTION OF VERTICAL MASKWALL LOCATED IN AN INCONSPICUOUS AREA. BEGIN PATCHING DEMONSTRATION BY USING A MORTAR MIX COMPRISED OF 1 PART WHITE CEMENT, 2 PARTS STANDARD PORTLAND CEMENT, 6 PARTS MORTAR SAND, AND WATER. THE QUANTITY OF WATER USED SHALL PRODUCE A MORTAR CONSISTENCY AS DRY AS POSSIBLE TO USE EFFECTIVELY.

2. WHEN PATCHING TEST AREAS HAVE SET, SATURATE WITH WATER AND RUB WITH A FINE CARBORUNDUM STONE UNTIL SURFACES ARE SMOOTH IN TEXTURE. REMOVE LOOSE POWDER AND OTHER CONTAMINANTS BY RUBBING WITH BURLAP AND RINSING WITH WATER. AFTER SURFACES HAVE DRIED, PATCH COLOR AND TEXTURE OF SURFACES WILL BE REVIEWED BY THE ENGINEER. PATCHES SHOULD MATCH OR BE SLIGHTLY LIGHTER THAN SURROUNDING CONCRETE. IF RESULTS ARE UNSATISFACTORY, ADJUST PATCHING MORTAR MIX PROPORTIONS AND PERFORM ANOTHER DEMONSTRATION UNTIL RESULTS ARE DEEMED SATISFACTORY BY THE ENGINEER.

3. USE THE PATCHING MORTAR MIX PROPORTIONS THAT ARE APPROVED BY THE ENGINEER AS A RESULT OF THE SATISFACTORY DEMONSTRATION. DO NOT USE PATCHING MORTAR THAT IS MORE THAN 1 HOUR OLD.

FINISHED MASKWALL CONCRETE SHALL BE SMOOTH AND SHOW NO WOOD GRAIN OR OTHER TEXTURE FROM THE FACE OF THE FORMS USED. ALL COSTS FOR REPAIR OR COVERING WOOD GRAIN OR OTHER TEXTURES ON THESE SURFACES SHALL BE THE RESPONSIBILITY OF THE CONTRACTOR.

FOR ANTI-GRAFFITI COATING APPLIED TO MASKWALLS, SEE DESIGN SHEET 42.

NOTES:

DESIGNATION "-A" SIGNIFIES BAR ASSOCIATED WITH THE RAMP A BRIDGE. "-A" NOT SHOWN IN DETAILS FOR CLARITY.

SEE ABUTMENT NOTES ON DESIGN SHEET 5.

TWO INCH CLEAR CONCRETE COVER UNLESS NOTED OTHERWISE.

THE JOINT SEALER SHALL BE LIGHT GRAY NONSAG LATEX CAULKING SEALER MARKETED FOR OUTDOOR USE. NO TESTING OR CERTIFICATION IS REQUIRED. COST OF THE JOINT SEALER SHALL BE CONSIDERED INCIDENTAL TO OTHER CONSTRUCTION.

FINISH EXPOSED SURFACE OF ABUTMENT WINGWALL AND EXTERIOR FACE OF BARRIER END SECTION IN ACCORDANCE WITH THE 'MASKWALL CONCRETE FINISH NOTES'.

CONTRACTOR SHALL EXERCISE ALL DUE CARE TO ASSURE THAT THE MASKWALL SURFACE FINISH IS INTACT AND THE OVERALL APPEARANCE IS AESTHETICALLY PLEASING AT COMPLETION OF THE PROJECT. IF THE MASKWALLS ARE CONSTRUCTED BEFORE THE DECK, APPROACH SLAB OR BARRIER RAILINGS, ADDITIONAL EFFORT MAY BE REQUIRED IN FORMING AND PLACING THE DECK, APPROACH SLAB AND/OR BARRIER CONCRETE, AND PRECAUTIONS SHALL BE TAKEN TO PROTECT THE MASKWALLS DURING THESE OPERATIONS. IF THE MASKWALLS ARE CONSTRUCTED AFTER DECK, APPROACH SLAB OR BARRIER RAILINGS, TEMPORARY EARTH RETENTION MAY BE REQUIRED. IN EITHER CASE, ANY COSTS FOR PROTECTING THE MASKWALLS, WORKING AROUND THEM OR TEMPORARY EARTH RETENTION AND FINAL GRADING SHALL BE INCLUDED IN THE COST OF HIGH PERFORMANCE STRUCTURAL CONCRETE.

benesch
engineers · scientists · planners
Alfred Benesch & Company
205 North Michigan Avenue, Suite 2400
Chicago, Illinois 60601
312-565-0450 Job No. 10061

DESIGN FOR 9°41'0" SKEW (L.A.)

134'-9 x 40'-0
WELDED GIRDER BRIDGE
134'-9 SIMPLE SPAN

MASKWALL DETAILS

STA. 1503+40.88, BASELINE U.S. 67 RAMP A TBD

SCOTT COUNTY
IOWA DEPARTMENT OF TRANSPORTATION - HIGHWAY DIVISION

EPOXY REINF. BAR LIST - NE MASKWALL

BAR	LOCATION	SHAPE	NO.	LENGTH	WEIGHT
5a26-32A	HORIZONTAL END		38	8'-8	343
5a27-32A	HORIZONTAL		31	15'-11	515
4a28-32A	HORIZONTAL TOP		16	4'-0	43
4a29-32A	HORIZONTAL TOP - STRAIGHT		3	15'-11	32
5s26-32A	VERTICAL		28	10'-1	294
5s27-32A	CURVED VERTICAL		2	7'-11	17
5s28-32A	VERTICAL		14	8'-3	120
5s29-32A	VERTICAL TOP		16	6'-7	110
				TOTAL (LBS.)	1475

STAINLESS STEEL REINFORCING BAR LIST - NE MASKWALL

BAR	LOCATION	SHAPE	NO.	LENGTH	WEIGHT
5z25-32A	MASKWALL TIES		12	1'-9	22
				TOTAL (LBS.)	22

HIGH PERFORMANCE STRUCTURAL CONCRETE PLACEMENT SUMMARY

ITEM	UNIT	TOTAL
MASKWALL 1 @ 12.2 CU. YD. (PORTION ABOVE FOOTING)	CU. YD.	12.2

BENT BAR DETAILS

BAR	A	B
5a26	3'-10	0'-11 3/4
5s29	2'-9	1'-1

NOTE: ALL DIMENSIONS ARE OUT TO OUT.
D= PIN DIAMETER.

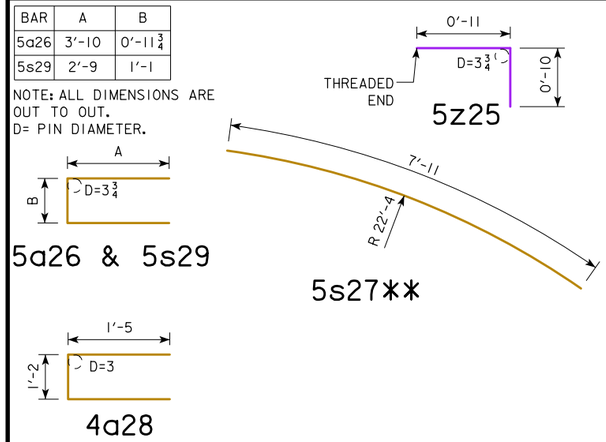

** CONTRACTOR MAY BEND IN FIELD

EPOXY REINF. BAR LIST - NW MASKWALL

BAR	LOCATION	SHAPE	NO.	LENGTH	WEIGHT
5a36-32A	HORIZONTAL END		30	9'-6	297
5a37-32A	HORIZONTAL		24	14'-10	371
4a38-32A	HORIZONTAL TOP		16	4'-0	43
4a39-32A	HORIZONTAL TOP - STRAIGHT		3	14'-10	30
5s36-32A	VERTICAL		26	9'-7	260
5s37-32A	CURVED VERTICAL		2	12'-11	27
5s38-32A	VERTICAL		20	6'-4	132
5s39-32A	VERTICAL TOP		16	6'-7	110
				TOTAL (LBS.)	1270

STAINLESS STEEL REINFORCING BAR LIST - NW MASKWALL

BAR	LOCATION	SHAPE	NO.	LENGTH	WEIGHT
5z35-32A	MASKWALL TIES		12	1'-9	22
				TOTAL (LBS.)	22

HIGH PERFORMANCE STRUCTURAL CONCRETE PLACEMENT SUMMARY

ITEM	UNIT	TOTAL
MASKWALL 1 @ 10.7 CU. YD. (PORTION ABOVE FOOTING)	CU. YD.	10.7

BENT BAR DETAILS

BAR	A	B
5a36	4'-3	0'-11 3/4
5s39	2'-9	1'-1

NOTE: ALL DIMENSIONS ARE OUT TO OUT.
D= PIN DIAMETER.

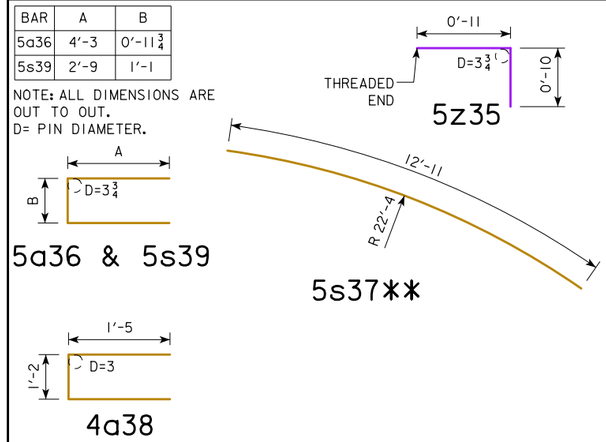

** CONTRACTOR MAY BEND IN FIELD

NOTE:
SEE DESIGN SHEET 17 FOR NOTES.

DESIGN FOR 9°41'0" SKEW (L.A.)
134'-9 x 40'-0
WELDED GIRDER BRIDGE
134'-9 SIMPLE SPAN
MASKWALL DETAILS
STA. 1503+40.88, BASELINE U.S. 67 RAMP A TBD
SCOTT COUNTY
IOWA DEPARTMENT OF TRANSPORTATION - HIGHWAY DIVISION
DESIGN SHEET NO. 18 OF 42 FILE NO. 30253 DESIGN NO. 3808

benesch engineers · scientists · planners
Alfred Benesch & Company
205 North Michigan Avenue, Suite 2400
Chicago, Illinois 60601
312-565-0450 Job No. 10061

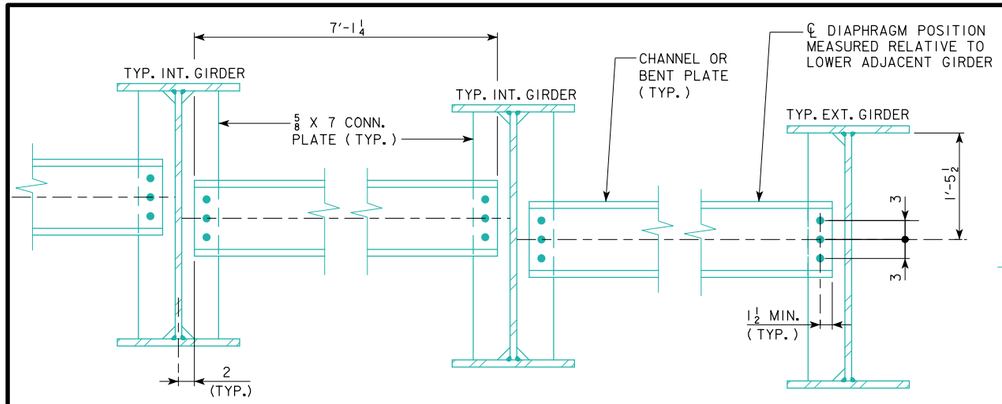

ABUTMENT DIAPHRAGM
(ALONG SKEW)

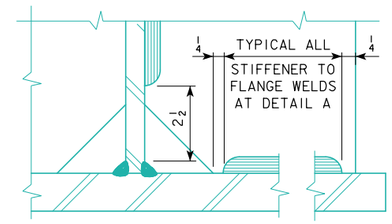

DETAIL A

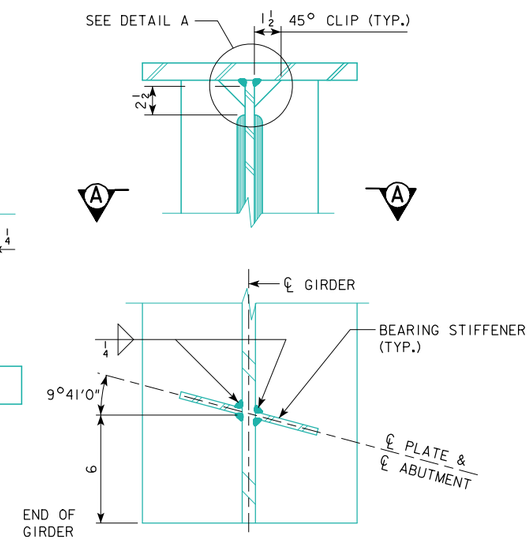

SECTION A-A

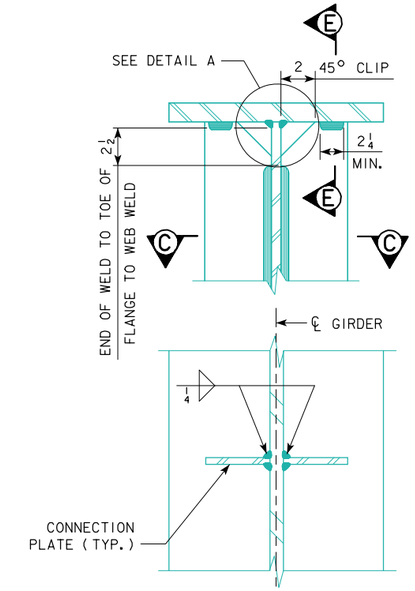

SECTION C-C

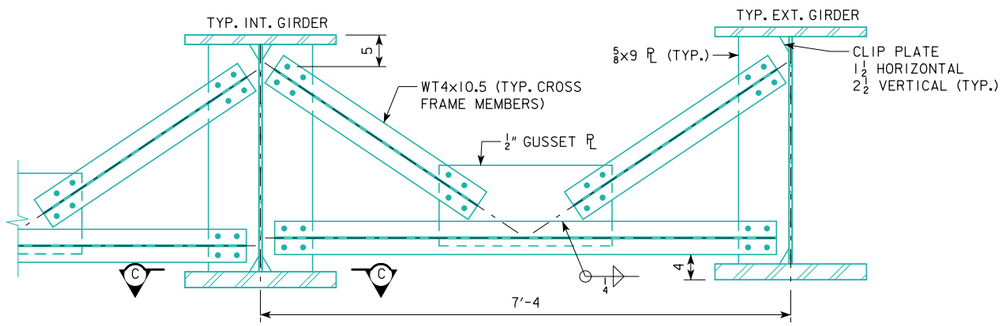

INTERMEDIATE CROSS FRAME
(AT RIGHT ANGLES)

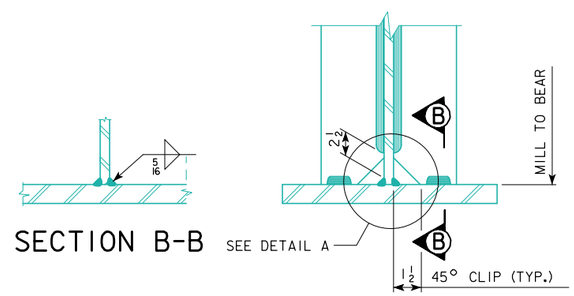

SECTION B-B

ABUTMENT BEARING STIFFENERS

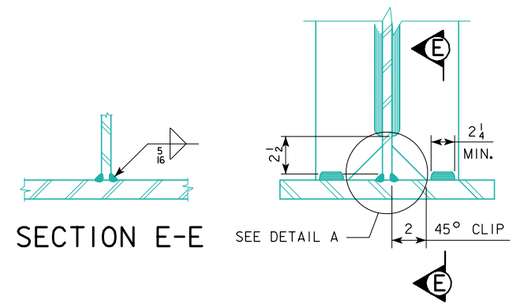

SECTION E-E

INTERMEDIATE DIAPHRAGM STIFFENER

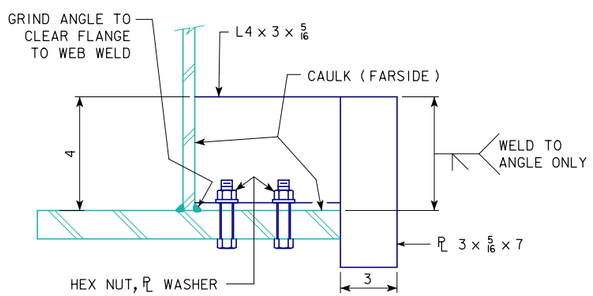

SECTION G-G

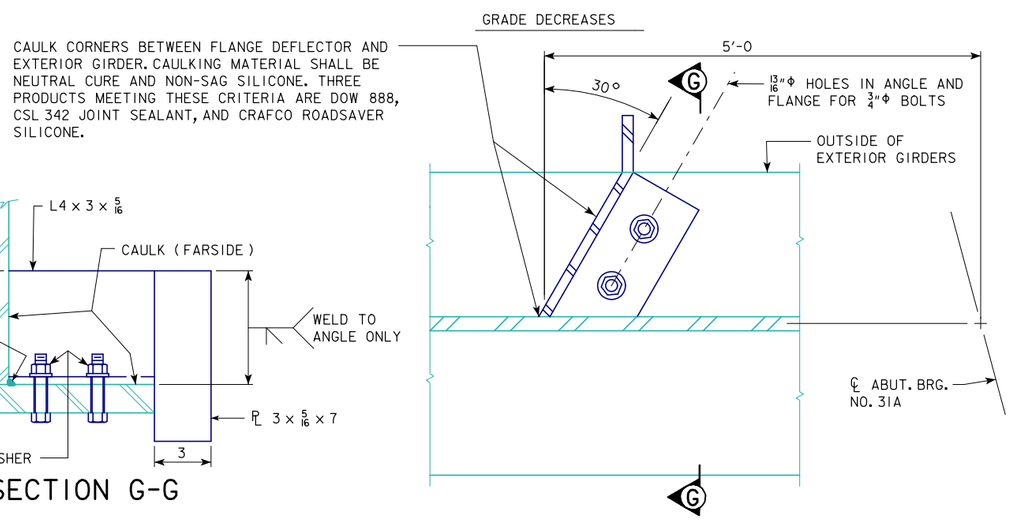

FLANGE DEFLECTOR DETAILS
(2 REQUIRED PER BRIDGE)

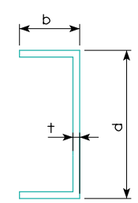

BENT PLATE DIAPHRAGM OPTION

DIAPHRAGM MEMBER OPTIONS						
DIAPHRAGM LOCATION	CHANNEL OPTION		BENT PLATE OPTION			
	DESIGNATION	CONN. BOLTS	d (IN)	b (IN)	t (IN)	CONN. BOLTS
ABUTMENT	C12x30	3 - 7/8"Φ	12	4	1/2	3 - 7/8"Φ

NOTES:

FOR THE ABUTMENT DIAPHRAGM, EITHER CHANNEL OR BENT PLATE DIAPHRAGM OPTION MAY BE SELECTED AT CONTRACTOR'S OPTION.

EXTERIOR BEAMS REQUIRE A CONNECTION PLATE ON THE INTERIOR SIDE OF THE WEB ONLY.

FLANGE DEFLECTORS ARE REQUIRED ON THE OUTSIDE OF THE EXTERIOR GIRDERS AT ABUTMENT NO. 31A.

DESIGN FOR 9°41'0" SKEW (L.A.)

134'-9 x 40'-0
WELDED GIRDER BRIDGE

134'-9 SIMPLE SPAN

DIAPHRAGM & WELDING DETAILS

STA. 1503+40.88, BASELINE U.S. 67 RAMP A TBD

SCOTT COUNTY

IOWA DEPARTMENT OF TRANSPORTATION - HIGHWAY DIVISION

DESIGN SHEET NO. 19 OF 42 FILE NO. 30253 DESIGN NO. 3808

benesch engineers · scientists · planners
Alfred Benesch & Company
205 North Michigan Avenue, Suite 2400
Chicago, Illinois 60601
312-565-0450 Job No. 10061

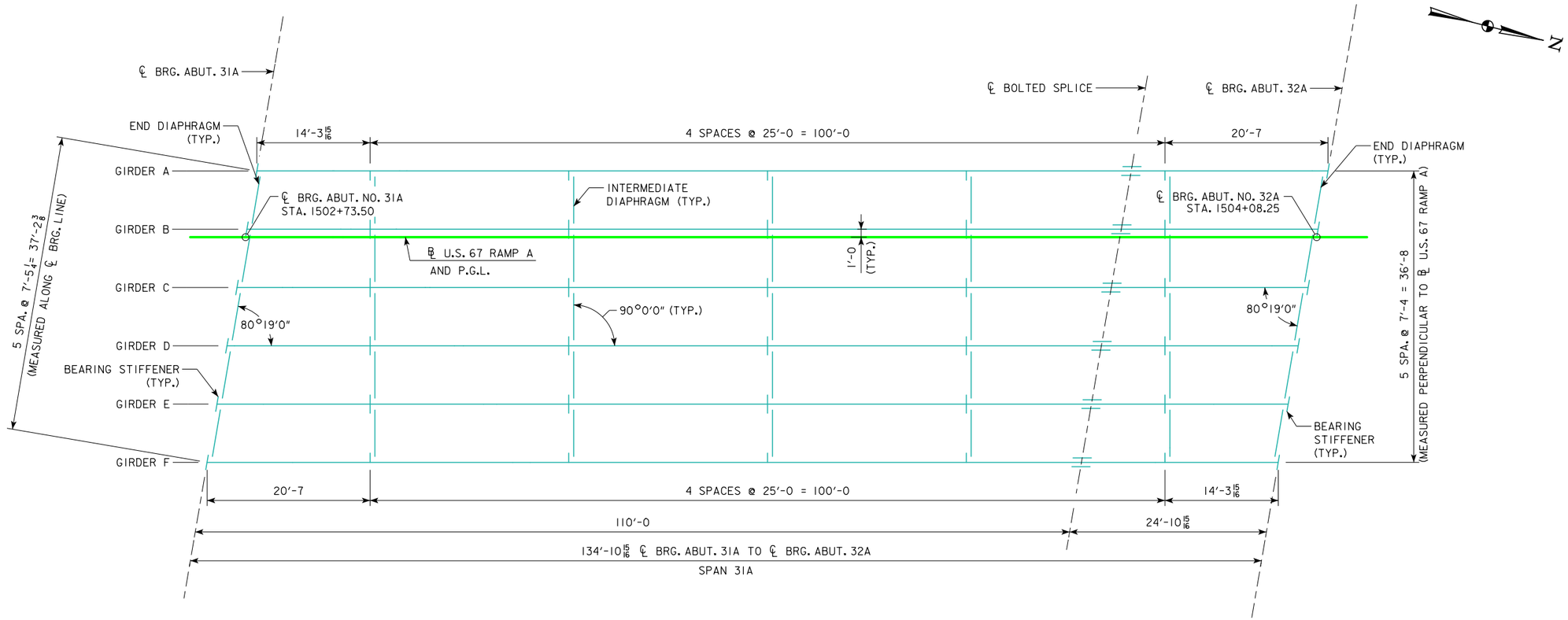

FRAMING PLAN

NOTES:

CONTRACTOR MAY ELIMINATE THE BOLTED FIELD SPLICES PROVIDED THAT THE APPROPRIATE SHOP DRAWINGS AND CUTTING DIAGRAMS ARE SUBMITTED FOR APPROVAL AND ARE APPROVED AND ALL SHIPPING AND ERECTION CRITERIA ARE MET. NO ADDITIONAL COMPENSATIONS RESULTING FROM THIS SUBSTITUTION WILL BE PROVIDED.

ALL DIMENSIONS ARE MEASURED ALONG ℄ GIRDERS AND ACCOUNT FOR THE VERTICAL COMPONENT DUE TO CHANGE IN ELEVATION IN ADDITION TO THE HORIZONTAL COMPONENT MEASURED IN PLAN.

DESIGN FOR 9°41'0" SKEW (L.A.)

134'-9 x 40'-0

WELDED GIRDER BRIDGE

134'-9 SIMPLE SPAN

FRAMING PLAN

STA. 1503+40.88, BASELINE U.S. 67 RAMP A TBD

SCOTT COUNTY

IOWA DEPARTMENT OF TRANSPORTATION - HIGHWAY DIVISION

DESIGN SHEET NO. 20 OF 42 FILE NO. 30253 DESIGN NO. 3808

benesch engineers · scientists · planners
Alfred Benesch & Company
205 North Michigan Avenue, Suite 2400
Chicago, Illinois 60601
312-565-0450 Job No. 10061

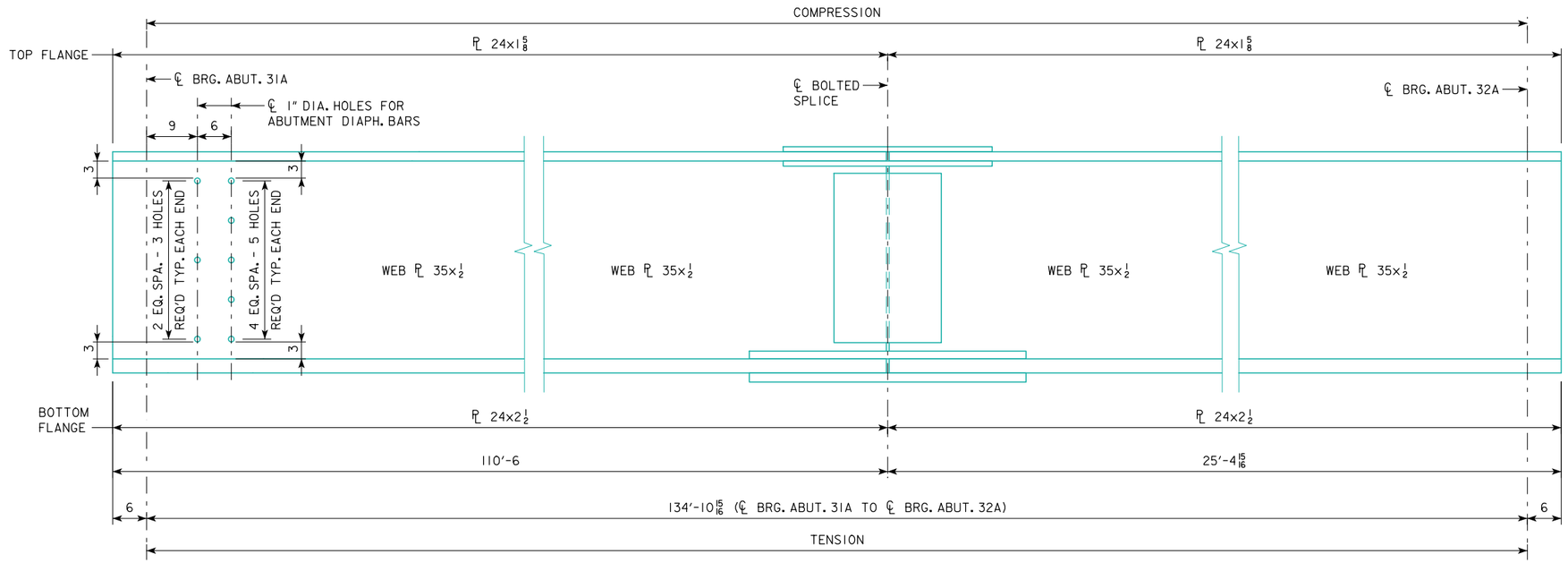

GIRDER ELEVATION

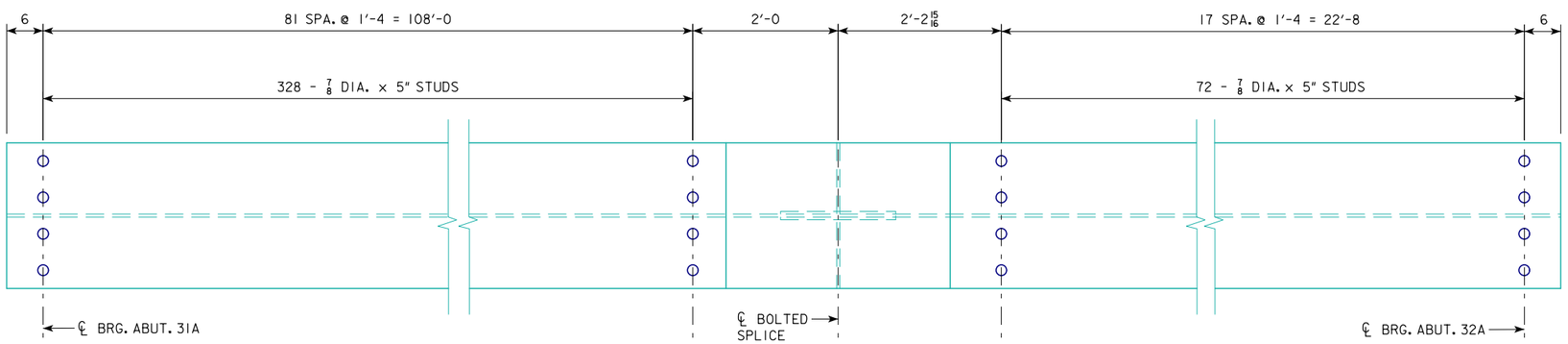

SHEAR STUD SPACING

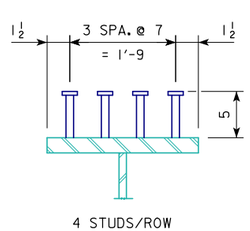

SHEAR STUD DETAILS

NOTE: ALL STUDS TO BE 7/8" DIA.

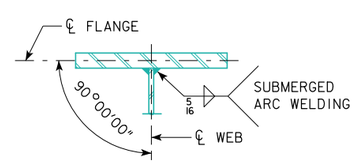

FLANGE TO WEB DETAIL

WEATHERING STEEL NOTES:

ALL STRUCTURAL STEEL SHALL CONFORM TO ASTM A709 GRADE 50W. THE MINIMUM YIELD POINT FOR GRADE 50W STRUCTURAL STEEL IS 50,000 PSI FOR PLATES 4 INCHES AND UNDER IN THICKNESS, AND ALL STRUCTURAL SHAPES. THE GRADE 50W STEEL IS A WEATHERING STEEL AND IS TO REMAIN UNPAINTED, EXCEPT AS NOTED.

ALL PIECES COMPRISING THE ABUTMENT BEARINGS SHALL COMPLY WITH THE REQUIREMENTS AS STATED IN THE NOTES IN THIS SECTION.

SHEAR STUDS ARE TO BE OF AN APPROVED TYPE LISTED IN MATERIALS I.M. 453.10, APPENDIX A.

THE FINISH ON BEARINGS AND WEATHERING STEEL SHALL BE IN ACCORDANCE WITH THE PLAN NOTES AND SECTION 2408 OF THE STANDARD SPECIFICATIONS. ALL WEATHERING STEEL EMBEDDED INTO AN INTEGRAL ABUTMENT SHALL BE PAINTED TO A DISTANCE OF 1 FOOT FROM THE CONCRETE FACE AND SEALED BY CAULKING AT THE ABUTMENT CONCRETE AND STEEL INTERFACE. EXTERIOR SURFACES OF ALL GALVANIZED COMPONENTS WHICH ARE DESIGNATED IN THE CONTRACT DOCUMENTS TO BE PAINTED SHALL BE PREPARED ACCORDING TO ARTICLE 2509.03 OF THE STANDARD SPECIFICATIONS.

THE GRADE 50W STEEL FOR THE WEBS OF THE EXTERIOR GIRDERS OF THE BRIDGE SHALL BE OF THE SAME TYPE AND FROM THE SAME STEEL MILL.

BOLTS FOR USE WITH WEATHERING STEEL SHALL BE A325 TYPE III WITH A563 GRADE DH3 NUTS AND F436 TYPE III WASHERS.

BOLTS USED TO SPLICE GIRDER SECTIONS ARE TO BE INSTALLED SUCH THAT NUTS ARE ON THE INSIDE FACE OF THE GIRDER WEBS FOR THE EXTERIOR GIRDERS, AND ON THE TOP OF BOTH TOP AND BOTTOM FLANGES OF ALL THE GIRDERS.

THE STEEL SHALL BE KEPT FREE OF OIL, GREASE, DIRT, CRAYON OR CHALK MARKS, CONCRETE SPATTER AND ANY OTHER FOREIGN MATTER THAT MAY AFFECT THE NATURAL OXIDATION OF THE STEEL. ANY FOREIGN MATTER REMAINING ON THE STEEL AFTER COMPLETION OF BRIDGE CONSTRUCTION SHALL BE REMOVED BY THE BRIDGE CONTRACTOR AS DIRECTED BY THE ENGINEER. THE RESULTANT SURFACE SHALL BE FREE OF ALL VISIBLE RESIDUES. ALL COSTS ASSOCIATED WITH CLEANING STEEL SURFACES SHALL BE BORNE BY THE BRIDGE CONTRACTOR.

SEAL MATERIAL FOR CAULKING SHALL BE NEUTRAL CURE AND NON SAG SILICONE. TWO PRODUCTS MEETING THESE CRITERIA ARE DOW 888 OR CSL342 JOINT SEALANT.

SHOP WELDED FLANGE SPLICES SHALL BE AT LEAST 6" FROM A STIFFENER, 6" FROM A WEB SPLICE AND 4" FROM A SHEAR CONNECTOR. WEB SPLICES SHALL BE AT LEAST 6" FROM A STIFFENER. SPLICES SHALL NOT INTERFERE WITH OTHER BRIDGE COMPONENTS. ALL SHOP WELDED BUTT SPLICES SHALL BE SHOWN ON THE SHOP DRAWINGS AND SUBJECT TO APPROVAL BY THE ENGINEER.

NOTES:

FOR SPLICE DETAILS, SEE DESIGN SHEET 22.

FOR WELDING DETAILS, DIAPHRAGM AND CONNECTION PLATE DETAILS, SEE DESIGN SHEET 19.

SHOP WELDED WEB AND FLANGE SPICES MAY BE PERMITTED WHEN DETAILED ON THE SHOP DRAWINGS AND APPROVED BY THE ENGINEER. NO ADDITIONAL PAYMENT WILL BE MADE FOR OPTIONAL WEB AND FLANGE SPLICES ADDED FOR THE CONTRACTOR'S CONVENIENCE.

CHARPY V-NOTCH TOUGHNESS REQUIREMENTS IN ACCORDANCE WITH ARTICLE 4152.02 OF THE STANDARD SPECIFICATIONS SHALL APPLY TO ALL CROSS FRAMES AND CONNECTION STIFFENERS AT CROSS FRAMES.

DESIGN FOR 9°41'0" SKEW (L.A.)

134'-9 x 40'-0
WELDED GIRDER BRIDGE

134'-9 SIMPLE SPAN

GIRDER ELEVATION

STA. 1503+40.88, BASELINE U.S. 67 RAMP A — TBD

SCOTT COUNTY

IOWA DEPARTMENT OF TRANSPORTATION - HIGHWAY DIVISION

DESIGN SHEET NO. 21 OF 42 FILE NO. 30253 DESIGN NO. 3808

benesch engineers · scientists · planners
Alfred Benesch & Company
205 North Michigan Avenue, Suite 2400
Chicago, Illinois 60601
312-565-0450 Job No. 10061

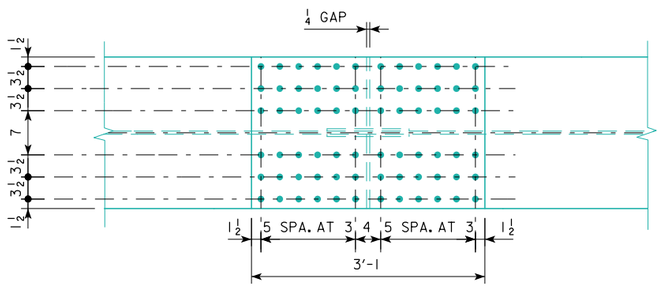

TOP PLAN

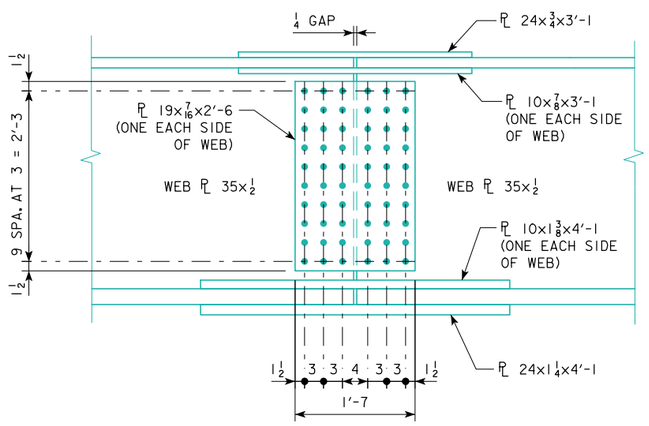

ELEVATION

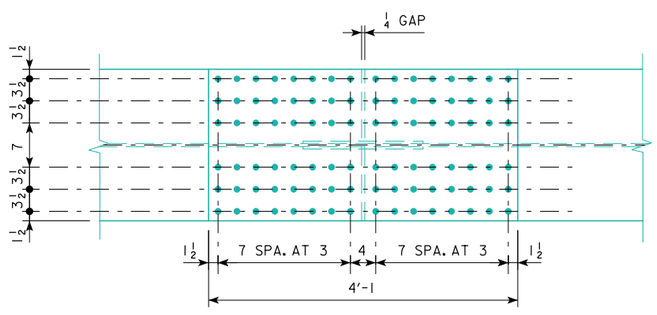

BOTTOM PLAN

BOLTED SPLICE

MOMENT AND REACTION TABLE

LOAD NAME	LOAD - KIPS/FT		MOMENT - FOOT-KIPS		REACTION - KIPS			
			0.5 SPAN		ABUTMENT NO. 31A		ABUTMENT NO. 32A	
	INTERIOR	EXTERIOR	INTERIOR	EXTERIOR	INTERIOR	EXTERIOR	INTERIOR	EXTERIOR
DC1	1.186	1.239	2693	2813	79.9	83.5	79.9	83.5
DC2	0.187	0.187	424	424	12.6	12.6	12.6	12.6
DW	0.133	0.133	303	303	9.0	9.0	9.0	9.0
	DISTRIBUTION FACTOR							
LIVE LOAD + IMPACT (HL-93) (TRUCK)	MOMENT 0.568	MOMENT 0.684	2446	2945	104.6	93.2	104.6	93.2
	REACTION 0.791	REACTION 0.705						
LIVE LOAD + IMPACT (HL-93) (TANDEM)	MOMENT 0.568	MOMENT 0.684	2060	2480	85.9	76.6	85.9	76.6
	REACTION 0.791	REACTION 0.705						
TOTAL			5866	6485	206.1	198.3	206.1	198.3

NOTES:

MOMENTS AND REACTIONS SHOWN ARE UNFACTORED.

DC1 INCLUDES ALL NON-COMPOSITE DEAD LOADS SUCH AS STEEL GIRDER WEIGHT AND CONC. SLAB WEIGHT.

DC2 INCLUDES ALL COMPOSITE DEAD LOADS SUCH AS BARRIER RAILS.

DW INCLUDES A FUTURE WEARING SURFACE OF 20 PSF.

ALL SPLICE BOLTS 7/8"Φ

SEE DESIGN SHEET 20 FOR FRAMING PLAN

SEE DESIGN SHEET 21 FOR WEATHERING STEEL NOTES AND GIRDER DETAILS.

SEE DESIGN SHEET 23 FOR SUPERSTRUCTURE NOTES.

benesch
engineers · scientists · planners
Alfred Benesch & Company
205 North Michigan Avenue, Suite 2400
Chicago, Illinois 60601
312-565-0450 Job No. 10061

DESIGN FOR 9°41'0" SKEW (L.A.)

134'-9 x 40'-0
WELDED GIRDER BRIDGE
134'-9 SIMPLE SPAN

SPLICE DETAILS & MOMENT TABLE

STA. 1503+40.88, BASELINE U.S. 67 RAMP A TBD

SCOTT COUNTY

IOWA DEPARTMENT OF TRANSPORTATION - HIGHWAY DIVISION

DESIGN SHEET NO. 22 OF 42 FILE NO. 30253 DESIGN NO. 3808

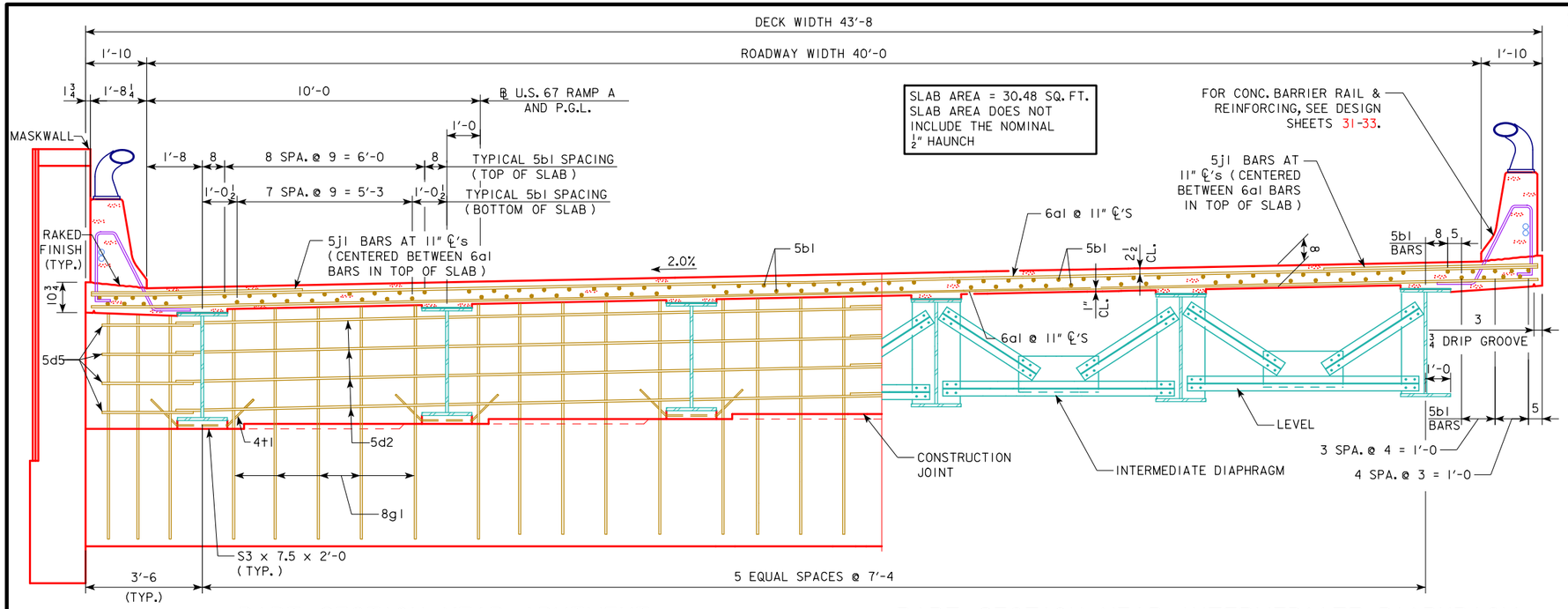

PART SECTION NEAR ABUTMENT

(LOOKING NORTH)

PART SECTION NEAR INTERMEDIATE DIAPHRAGM

(LOOKING NORTH)

NOTE:
STEEL ABUTMENT DIAPHRAGMS OMITTED FOR CLARITY.

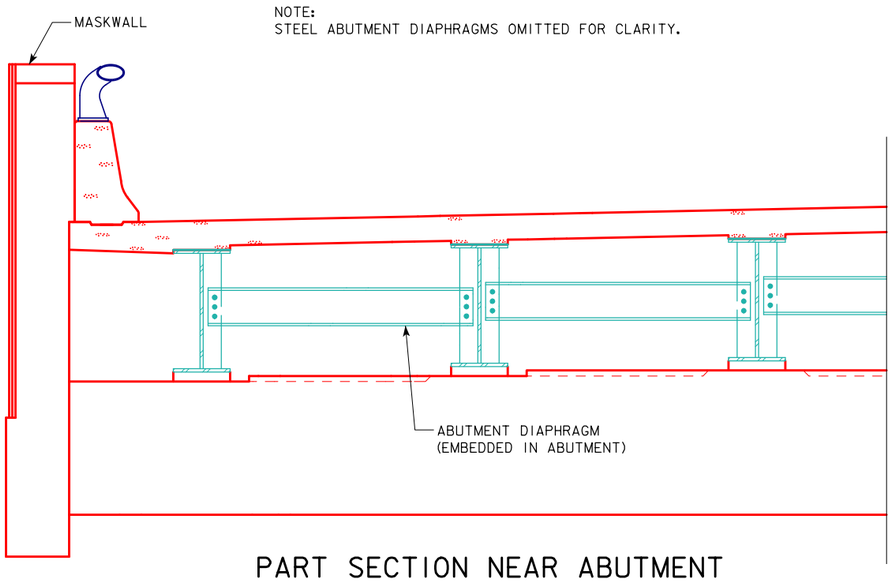

PART SECTION NEAR ABUTMENT

(LOOKING NORTH)

REINFORCING OMITTED FOR CLARITY.

NOTE:
SEE DESIGN SHEET 19 FOR STIFFENER AND WELDING DETAILS.

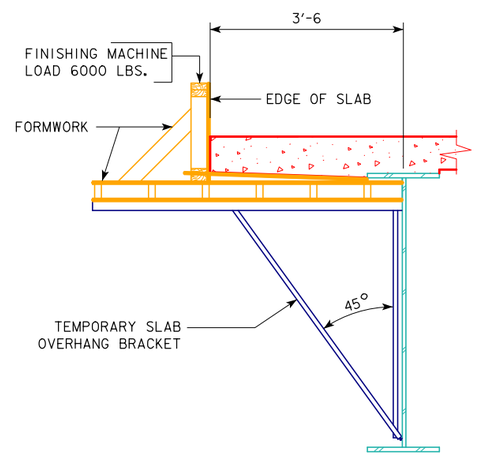

TEMPORARY SLAB OVERHANG BRACKET DETAIL

A MAXIMUM FINISHING MACHINE LOAD AND THE ANGLE OF THE DIAGONAL MEMBER OF THE OVERHANG BRACKET SHOWN WERE ASSUMED BY THE DESIGNER. THESE ASSUMPTIONS, IN ADDITION TO OTHER CONSTRUCTION LOADINGS, WERE USED TO CHECK THE STRENGTH OF THE EXTERIOR GIRDER DURING CRITICAL STAGES OF CONSTRUCTION. IF THE FINISHING MACHINE LOAD OR ANGLE OF THE DIAGONAL MEMBER OF THE OVERHANG BRACKET DEVIATE SIGNIFICANTLY FROM VALUES SHOWN, THE CONTRACTOR SHALL SUBMIT TO THE ENGINEER THIS INFORMATION ON PROPOSED CONSTRUCTION EQUIPMENT TO BE USED.

IF THE VERTICAL HEIGHT OF THE OVERHANG BRACKET IS ADJUSTABLE, THE BASE OF THE BRACKET IS TO BE LOCATED AS CLOSE AS POSSIBLE TO THE BOTTOM FLANGE OF THE GIRDER.

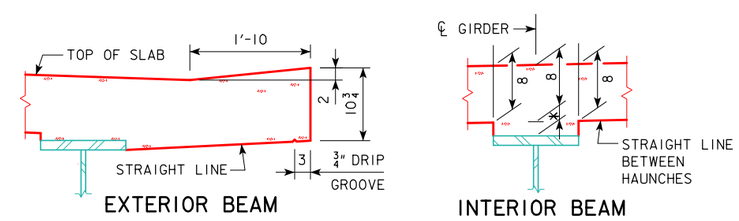

* CONCRETE HAUNCH DIMENSION MEASURED BETWEEN BOTTOM OF SLAB AND TOP OF TOP FLANGE PLATE AS SHOWN ON THE "THEORETICAL CONCRETE HAUNCH DIAGRAM" SHOWN ELSEWHERE ON THE PLANS.

TYP. SLAB & HAUNCH DETAIL

THE MAXIMUM EMBEDMENT OF THE EDGE OF THE TOP FLANGE IN THE SLAB SHALL BE 1/2 INCH. SHEAR STUDS ARE TO HAVE A MINIMUM PENETRATION OF 2 INCHES INTO THE SLAB AND BE AT LEAST 2 1/2 INCHES CLEAR OF THE TOP OF THE SLAB. THESE REQUIREMENTS WERE USED IN SETTING THE MAXIMUM AND MINIMUM ALLOWABLE FIELD HAUNCH VALUES SHOWN IN THE "MISCELLANEOUS DATA TABLE" SHOWN ELSEWHERE ON THESE PLANS.

SUPERSTRUCTURE NOTES:

THE FLOOR SLAB AS SHOWN INCLUDES 1/2" INTEGRAL WEARING SURFACE.

FORMS FOR THE SLAB AND BARRIER RAIL ARE TO BE SUPPORTED BY THE GIRDERS.

CLEAR DISTANCE FROM FACE OF CONCRETE TO NEAR REINFORCING BAR SHALL BE 2 INCHES UNLESS OTHERWISE NOTED OR SHOWN.

TOP TRANSVERSE REINFORCING STEEL IS TO BE PARALLEL TO AND 2 1/2" CLEAR BELOW TOP OF SLAB. BOTTOM TRANSVERSE REINFORCING STEEL IS TO BE PARALLEL TO AND 1" CLEAR ABOVE BOTTOM OF SLAB. TOP AND BOTTOM REINFORCING STEEL IS TO BE SUPPORTED BY INDIVIDUAL EPOXY COATED METAL BAR CHAIRS SPACED AT NOT MORE THAN 3'-0 CENTERS LONGITUDINALLY AND TRANSVERSELY, OR BY CONTINUOUS ROWS OF EPOXY COATED METAL BAR HIGH CHAIRS OR SLAB BOLSTERS SPACED 4'-0 APART.

TRANSVERSE SLAB REINFORCING MAY BE SPLICED WITH ONE LAP LOCATED AS FOLLOWS:
TOP BARS - LAP MIDWAY BETWEEN BEAMS (MIN. LAP = 3'-3).
BOTTOM BARS - LAP OVER BEAMS (MIN. LAP = 3'-3).
PAYMENT FOR REINFORCING BARS SHALL BE BASED ON NO SPLICES, AND NO ALLOWANCE SHALL BE MADE FOR THE ADDITIONAL LENGTH OF BAR REQUIRED FOR THE USE OF SPLICES.

THE ABUTMENT DIAPHRAGM CONCRETE IS TO BE PLACED MONOLITHICALLY WITH THE FLOOR SLAB.

ALL FIELD CONNECTIONS ARE TO BE BOLTED USING "HIGH STRENGTH BOLTS". UNLESS OTHERWISE NOTED, ALL OPEN HOLES ARE TO BE 15/16"Φ AND ALL BOLTS ARE TO BE A325 7/8"Φ.

BOTTOM FLANGES ARE TO BE PERPENDICULAR TO WEBS AT THE REACTION POINTS.

FILL ℙ THICKNESSES SHOWN ON PLANS ARE BASED ON NOMINAL GIRDER DIMENSIONS. THESE THICKNESSES ARE TO BE VERIFIED OR ADJUSTED DURING FABRICATION TO SECURE A CLOSE FIT. EACH FILL PLATE SHALL FIT TO THE NEAREST 1/16" IN THICKNESS AND SINGLE PLATES ARE REQUIRED AT EACH FILL LOCATION. GIRDERS ARE TO BE TRULY SQUARE AT SPLICE POINTS WITH FLANGES PERPENDICULAR TO WEBS.

THE DESIGN DRAWINGS INDICATE AWS PREQUALIFIED WELDED JOINTS. ALTERNATE JOINT DETAILS MAY BE SUBMITTED FOR APPROVAL.

MAGNETIC PARTICLE INSPECTION OF WELDS, IN ACCORDANCE WITH THE STANDARD SPECIFICATIONS, WILL BE REQUIRED.

SHOP WELDED FLANGE SPLICES SHALL BE A MINIMUM OF 6 INCHES FROM A STIFFENER, 6 INCHES FROM A WEB SPLICE, AND 4 INCHES FROM A SHEAR CONNECTOR. WEB SPLICES SHALL BE A MINIMUM OF 6 INCHES FROM A STIFFENER. SPLICES SHALL NOT INTERFERE WITH ANY OTHER BRIDGE COMPONENTS. ALL SHOP WELDED BUTT SPLICES SHALL BE SHOWN ON THE SHOP DRAWINGS AND SUBJECT TO APPROVAL BY THE ENGINEER.

benesch
engineers · scientists · planners
Alfred Benesch & Company
205 North Michigan Avenue, Suite 2400
Chicago, Illinois 60601
312-565-0450 Job No. 10061

DESIGN FOR 9°41'0" SKEW (L.A.)

134'-9 x 40'-0 WELDED GIRDER BRIDGE

134'-9 SIMPLE SPAN

TRANSVERSE SECTION

STA. 1503+40.88, BASELINE U.S. 67 RAMP A TBD

SCOTT COUNTY

IOWA DEPARTMENT OF TRANSPORTATION - HIGHWAY DIVISION

DESIGN SHEET NO. 23 OF 42 FILE NO. 30253 DESIGN NO. 3808

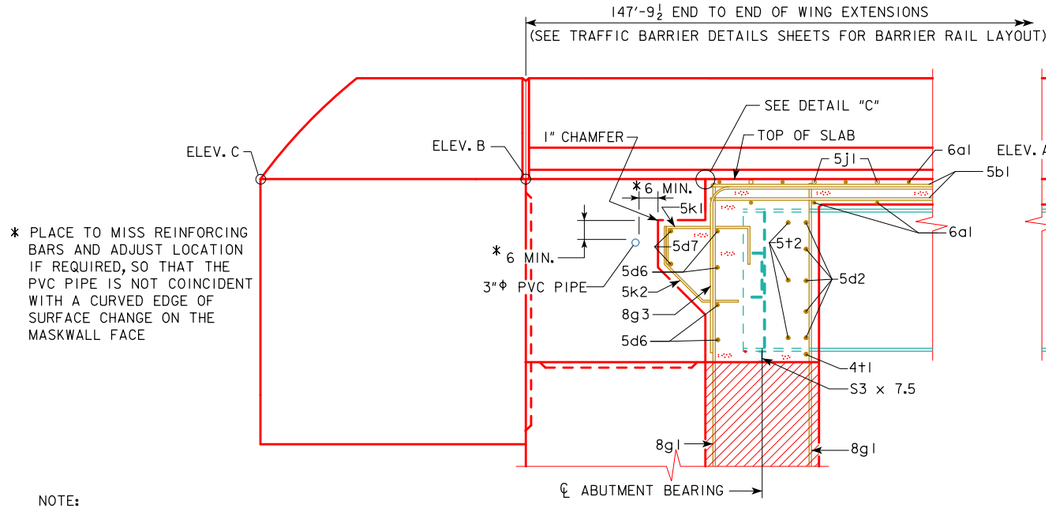

* PLACE TO MISS REINFORCING BARS AND ADJUST LOCATION IF REQUIRED, SO THAT THE PVC PIPE IS NOT COINCIDENT WITH A CURVED EDGE OF SURFACE CHANGE ON THE MASKWALL FACE

NOTE:
PLUG 3"Φ PVC PIPE WITH EXPANDING FOAM PRIOR TO BACKFILLING BEHIND ABUTMENTS.

PART LONGITUDINAL SECTION NEAR GUTTER

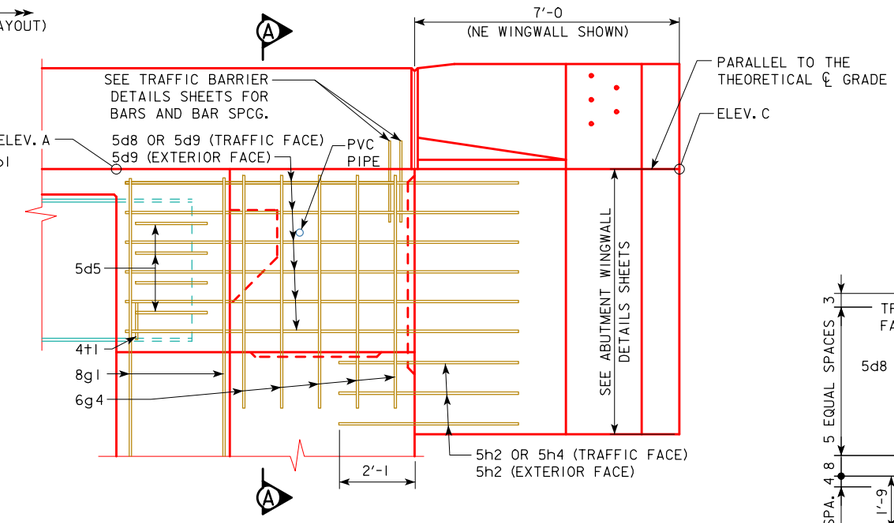

PART END VIEW AT ABUTMENT

(MASKWALL NOT SHOWN FOR CLARITY)

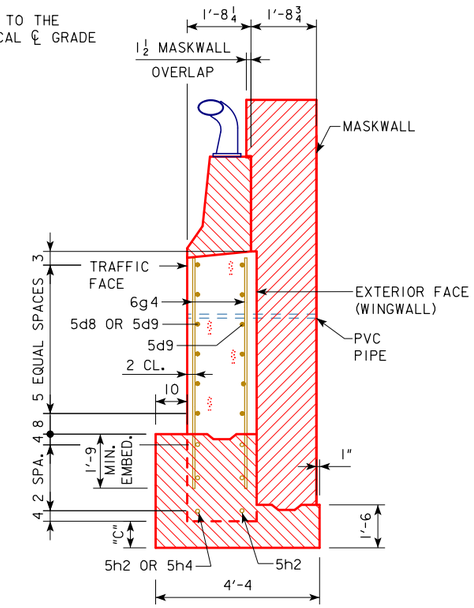

SECTION A-A

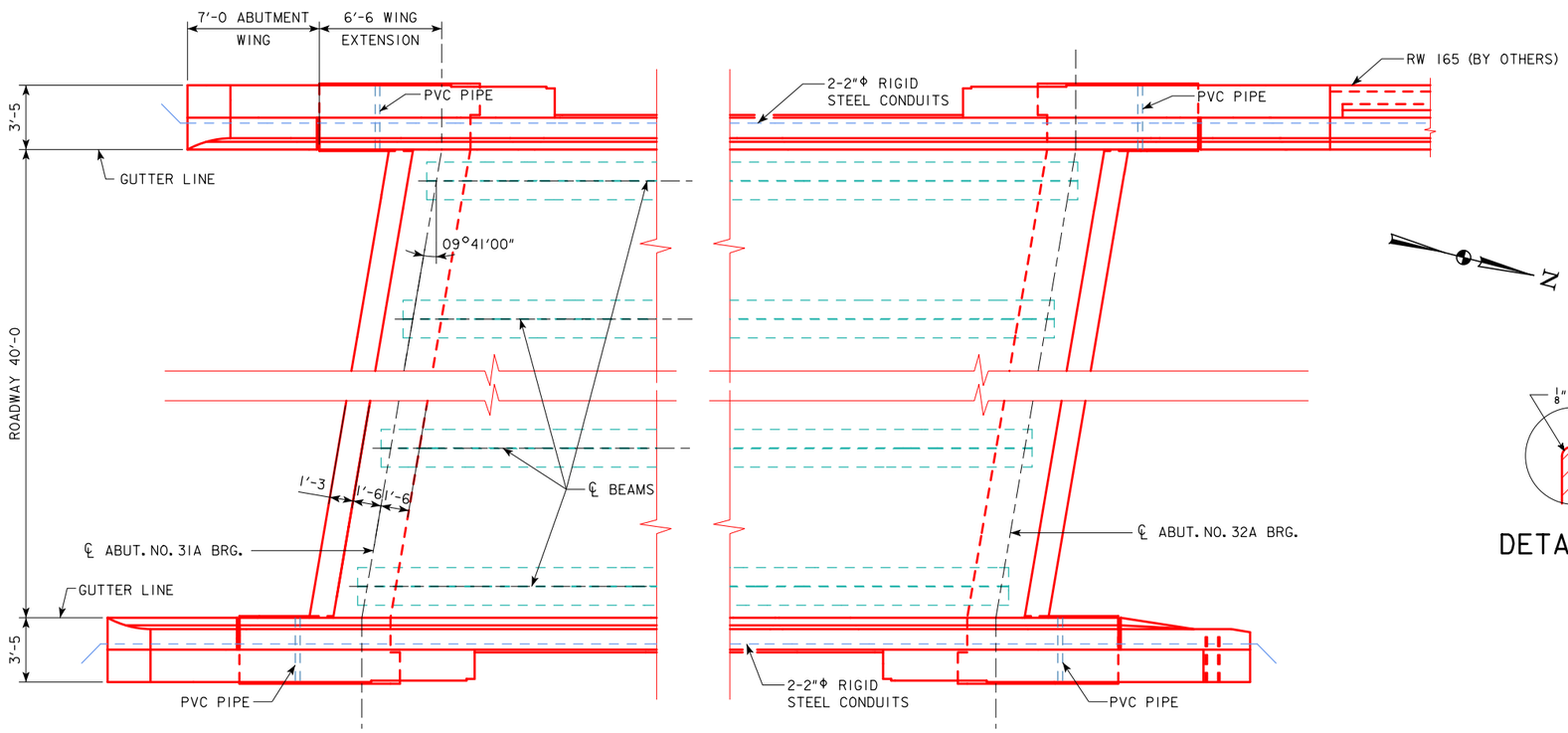

PART PLAN

(STEEL DIAPHRAGMS NOT SHOWN)

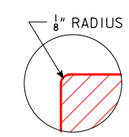

DETAIL "C"

TABLE OF WINGWALL ELEVATIONS

LOCATION	DIM "C"	ELEV. A	ELEV. B	ELEV. C
S.W. CORNER	1'-0⅛	593.90	593.47	593.09
N.W. CORNER	N/A	600.35	600.70	601.01
S.E. CORNER	1'-0⅜	594.33	593.90	593.52
N.E. CORNER	1'-0¾	600.84	601.20	601.51

DESIGN FOR 9°41'0" SKEW (L.A.)

134'-9 x 40'-0 WELDED GIRDER BRIDGE

134'-9 SIMPLE SPAN

LONGITUDINAL SECTION

STA. 1503+40.88, BASELINE U.S. 67 RAMP A — TBD

SCOTT COUNTY

IOWA DEPARTMENT OF TRANSPORTATION - HIGHWAY DIVISION

DESIGN SHEET NO. 24 OF 42 FILE NO. 30253 DESIGN NO. 3808

benesch engineers · scientists · planners
Alfred Benesch & Company
205 North Michigan Avenue, Suite 2400
Chicago, Illinois 60601
312-565-0450 Job No. 10061

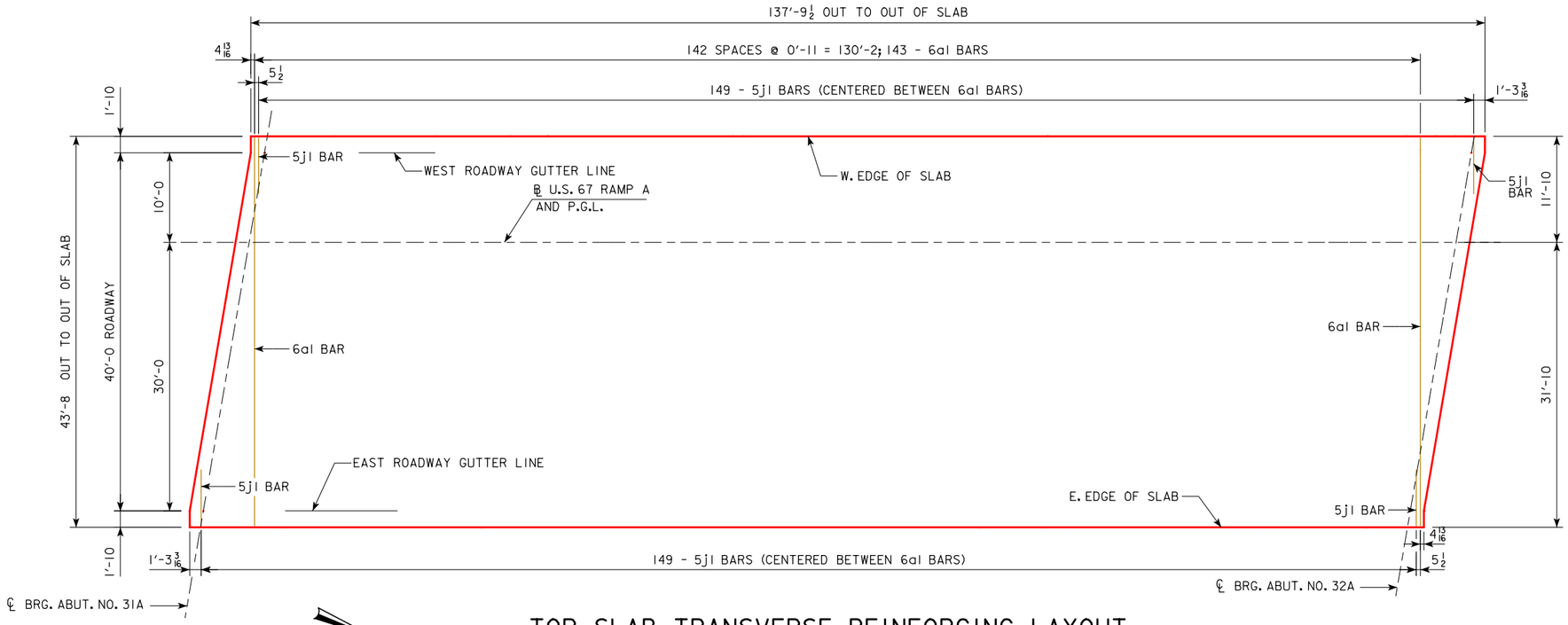

TOP SLAB TRANSVERSE REINFORCING LAYOUT

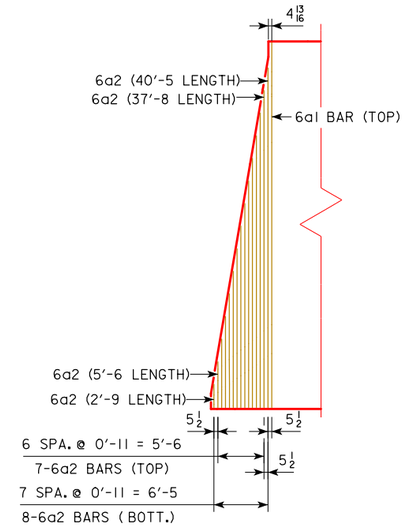

SOUTH END OF SLAB REINFORCING
(5j1 BARS NOT SHOWN FOR CLARITY)

BOTTOM SLAB TRANSVERSE REINFORCING LAYOUT

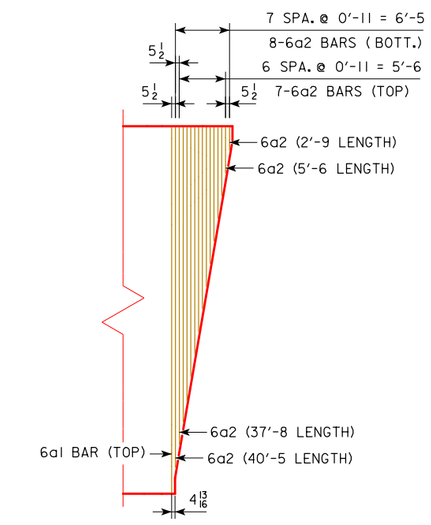

NORTH END OF SLAB REINFORCING
(5j1 BARS NOT SHOWN FOR CLARITY)

DESIGN FOR 9°41'0" SKEW (L.A.)

134'-9 x 40'-0 WELDED GIRDER BRIDGE

134'-9 SIMPLE SPAN

TRANSV. SLAB REINFORCING LAYOUT

STA. 1503+40.88, BASELINE U.S. 67 RAMP A TBD

SCOTT COUNTY

IOWA DEPARTMENT OF TRANSPORTATION - HIGHWAY DIVISION

DESIGN SHEET NO. 25 OF 42 FILE NO. 30253 DESIGN NO. 3808

benesch engineers · scientists · planners
Alfred Benesch & Company
205 North Michigan Avenue, Suite 2400
Chicago, Illinois 60601
312-565-0450 Job No. 10061

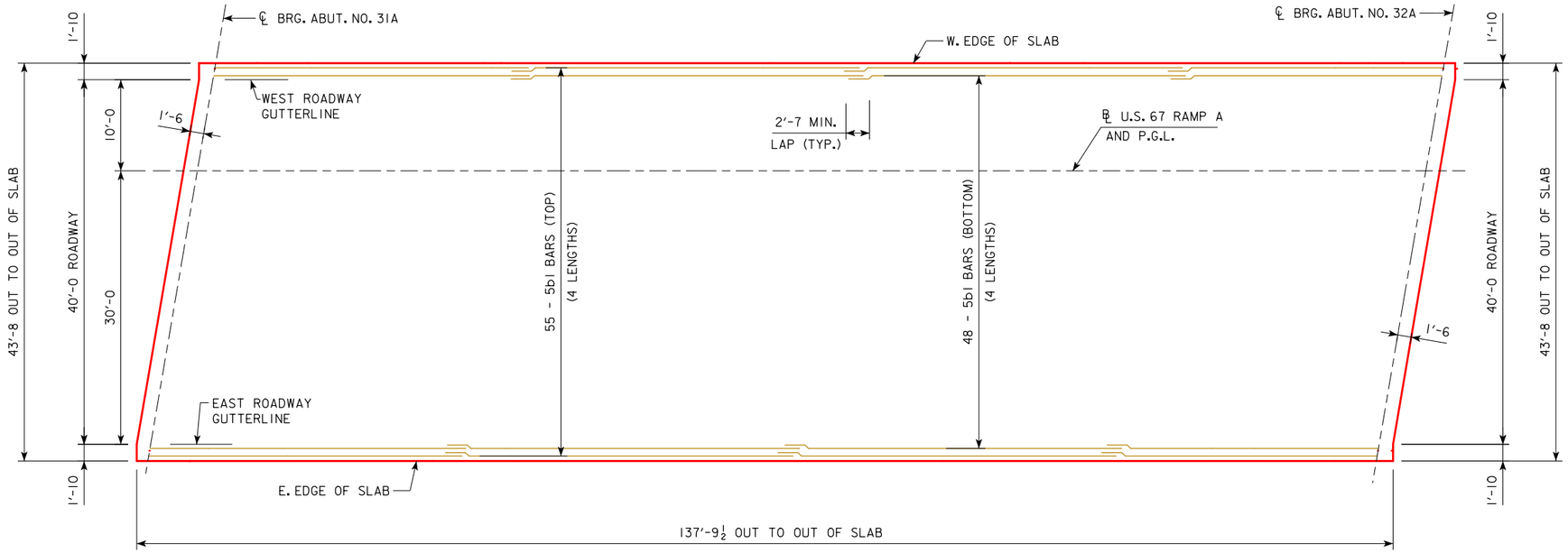

TOP AND BOTTOM SLAB LONGITUDINAL REINFORCING LAYOUT

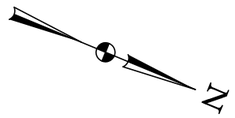

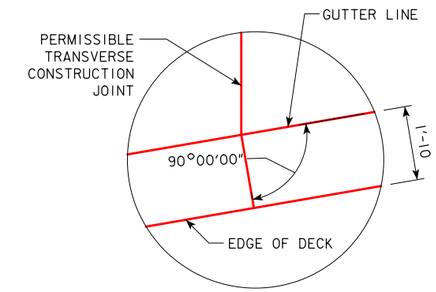

ROADWAY BARRIER JOINT DETAIL

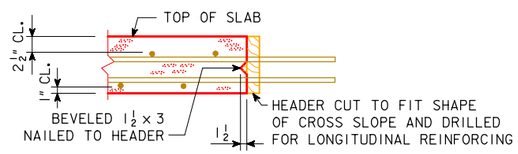

PERMISSIBLE TRANSVERSE SLAB CONSTRUCTION JOINT

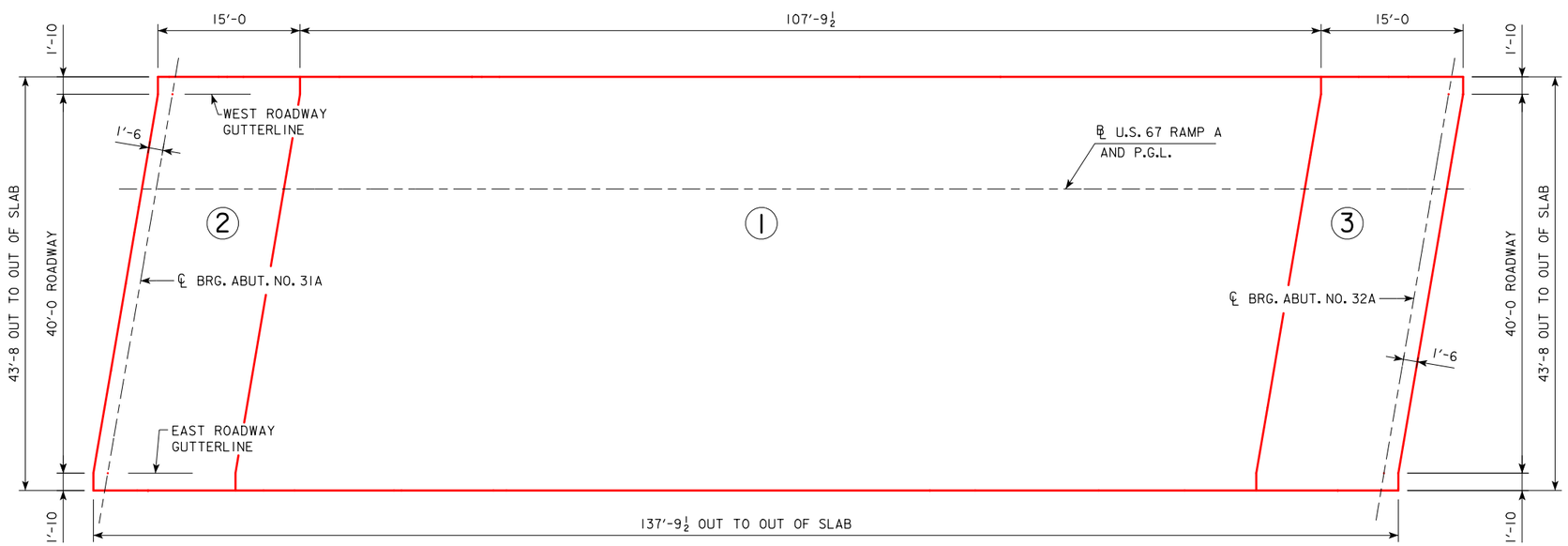

CONCRETE PLACEMENT DIAGRAM

NOTES:

ROADWAY SLAB SHALL BE PLACED IN SECTIONS FOR FULL WIDTH OF ROADWAY IN THE FOLLOWING SEQUENCES:

A. SECTION 1 SHALL BE PLACED FIRST AND MUST REMAIN PLASTIC UNTIL IT IS COMPLETELY PLACED.
B. SECTIONS 2 AND 3 MAY NOT BE PLACED UNTIL THE SECOND DAY FOLLOWING THE PLACEMENT OF SECTION 1.
C. ALTERNATE PROCEDURES FOR PLACING SLAB CONCRETE MAY BE SUBMITTED FOR APPROVAL TOGETHER WITH A STATEMENT OF THE PROPOSED METHOD AND EVIDENCE THAT THE CONTRACTOR POSSESSES THE NECESSARY EQUIPMENT AND FACILITIES TO ACCOMPLISH THE REQUIRED RESULTS. IF CONCRETE IS PLACED FOR THE ENTIRE DECK IN A SINGLE POUR, THEN THE CONCRETE MUST REMAIN PLASTIC UNTIL IT IS COMPLETELY PLACED.

SEE DESIGN SHEET 23 FOR 5bl BAR SPACING BETWEEN GIRDERS AND IN OVERHANG.

DESIGN FOR 9°41'0" SKEW (L.A.)

134'-9 x 40'-0
WELDED GIRDER BRIDGE

134'-9 SIMPLE SPAN

LONGIT. SLAB REINFORCING LAYOUT

STA. 1503+40.88, BASELINE U.S. 67 RAMP A TBD

SCOTT COUNTY

IOWA DEPARTMENT OF TRANSPORTATION - HIGHWAY DIVISION

DESIGN SHEET NO. 26 OF 42 FILE NO. 30253 DESIGN NO. 3808

benesch engineers · scientists · planners
Alfred Benesch & Company
205 North Michigan Avenue, Suite 2400
Chicago, Illinois 60601
312-565-0450 Job No. 10061

10:29:52 AM untitled c:\pwise_work\do_not_delete\dms05641\82074200.brg
MODEL: $MODEL

HIGH PERFORMANCE STRUCTURAL CONCRETE PLACEMENT QUANTITIES

ONE SUPERSTRUCTURE

LOCATION	QUANTITY
SLAB & ABUTMENT DIAPHRAGM	196.2
ABUTMENT FOOTINGS	52.6
SE MASKWALL	10.5
SW MASKWALL	10.1
NE MASKWALL	12.2
NW MASKWALL	10.7
SE ABUTMENT WING EXTENSION	2.1
SW ABUTMENT WING EXTENSION	2.1
NE ABUTMENT WING EXTENSION	2.1
NW ABUTMENT WING EXTENSION	5.4
TOTAL (CU. YDS.)	304.0

STRUCTURAL CONCRETE (BRIDGE) PLACEMENT QUANTITIES

TWO ABUTMENTS

LOCATION	QUANTITY
SE ABUTMENT WING	2.8
SW ABUTMENT WING	2.6
NE ABUTMENT WING	2.5
NW ABUTMENT WING	0.0
TOTAL (CU. YDS.)	7.9

ESTIMATED QUANTITIES

ONE SUPER. & TWO ABUTS.

ITEM	UNIT	QUANTITY
EXCAVATION, CLASS 20	CY	137
STRUCTURAL CONCRETE (BRIDGE)	CY	7.9
HIGH PERFORMANCE STRUCTURAL CONCRETE	CY	304.0
REINFORCING STEEL	LB	289
REINFORCING STEEL, EPOXY COATED	LB	70601
REINFORCING STEEL, STAINLESS STEEL	LB	2580
STRUCTURAL STEEL	LB	351441
PILES, STEEL, HP 10 X 57	LF	855
CORING	LF	93.0

BENT BAR DETAILS

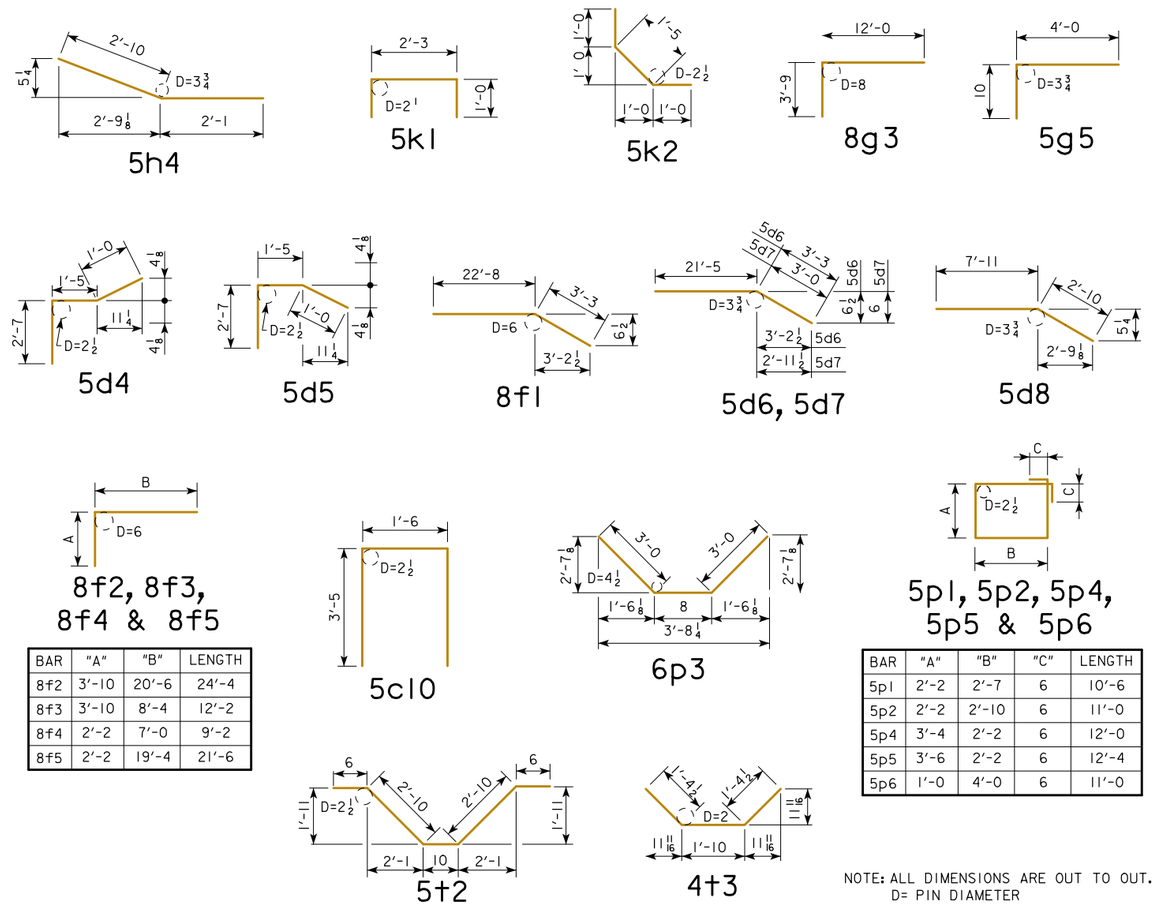

BAR	"A"	"B"	LENGTH
8f2	3'-10	20'-6	24'-4
8f3	3'-10	8'-4	12'-2
8f4	2'-2	7'-0	9'-2
8f5	2'-2	19'-4	21'-6

BAR	"A"	"B"	"C"	LENGTH
5p1	2'-2	2'-7	6	10'-6
5p2	2'-2	2'-10	6	11'-0
5p4	3'-4	2'-2	6	12'-0
5p5	3'-6	2'-2	6	12'-4
5p6	1'-0	4'-0	6	11'-0

NOTE: ALL DIMENSIONS ARE OUT TO OUT.
D= PIN DIAMETER

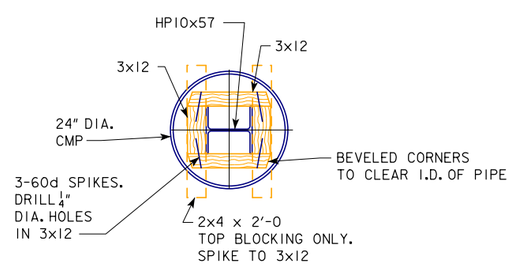

CMP BLOCKING DETAIL

ONE REQUIRED AT TOP AND BOTTOM OF CMP. BOTTOM BLOCKING SHALL BE TREATED MATERIAL AND SHALL REMAIN IN PLACE. TOP BLOCKING SHALL BE REMOVED PRIOR TO BACK FILLING INSIDE THE CMP. COST FOR THIS WORK SHALL BE INCLUDED IN THE PRICE BID FOR PREBORED HOLES.

REINF. BAR LIST-ONE SUPER.&TWO ABUTS.

	BAR	LOCATION	SHAPE	NO.	LENGTH	WEIGHT
EPOXY COATED REINFORCING	6a1-A	SLAB TRANSVERSE, TOP & BOTT.		285	43'-4	18550
	6a2-A	SLAB TRANSVERSE, TOP & BOTT.		30	VARIES	973
	5b1-A	SLAB LONGIT. TOP & BOTT.		412	36'-4	15613
	5c10-A	MASKWALL FOOTING VERTICAL FF		8	5'-0	42
	5d2-A	ABUT. DIAPH. LONGIT.		20	21'-5	447
	5d4-A	ABUT. DIAPH. LONGIT. - END		10	6'-7	69
	5d5-A	ABUT. DIAPH. LONGIT. - END		10	6'-7	69
	5d6-A	ABUT. DIAPH. LONGIT. - B.F.		16	24'-8	412
	5d7-A	PAVING NOTCH, LONGIT.		8	24'-5	204
	5d8-A	ABUT. DIAPH. WING EXT. LONGIT.		6	10'-9	67
	5d9-A	ABUT. DIAPH. WING EXT. LONGIT.		42	10'-8	467
	8f1-A	ABUT. FOOTING LONGIT. BOTH F.		36	25'-11	2491
	8f2-A	ABUT. EXTENSION LONGIT.		2	24'-4	130
	8f3-A	ABUT. EXTENSION LONGIT.		6	12'-2	195
	8f4-A	ABUT. EXTENSION LONGIT.		24	9'-2	587
	8f5-A	ABUT. EXTENSION LONGIT.		8	21'-6	459
	8g1-A	ABUT. VERT. BOTH F.		150	7'-3	2904
	8g3-A	ABUT. DIAPH. VERT. B.F.		64	15'-9	2691
	6g4-A	ABUT. DIAPH. WING EXT. VERT.		64	6'-6	625
	5g5-A	ABUT. FTG. DOWEL INTO MASKWALL		92	4'-10	464
	5h2-A	ABUT. TO WING HORIZ. BOTH F.		15	4'-11	77
	5h4-A	ABUT. TO WING HORIZ. T.F.		3	4'-11	15
	5j1-A	TOP OF SLAB TRANSV. (AT RAIL)		298	6'-3	1943
	5k1-A	PAVING NOTCH		64	4'-3	284
	5k2-A	PAVING NOTCH		64	3'-5	228
	5p1-A	ABUT. HOOPS		176	10'-6	1927
	5p2-A	ABUT. HOOPS AT ENDS		8	11'-0	92
	6p3-A	ABUT. BOTT. AT PILES		52	6'-8	521
	5p4-A	ABUT. EXTENSION HOOPS		14	12'-0	175
	5p5-A	ABUT. EXTENSION HOOPS		32	12'-4	412
	5p6-A	ABUT. EXTENSION HOOPS		33	11'-0	379
	5t2-A	ABUT. DIAPH. LONGIT. F.F.		36	7'-6	282
	4t3-A	UNDER BEAMS AT ABUTMENTS		12	4'-7	37
	BARRIER RAILS - SEE DESIGN SHEET 33					10256
	BARRIER RAIL END SECTION - SEE DESIGN SHEET 35					217
	LIGHT POLE BASES - SEE DESIGN SHEET $A37					175
	MASKWALLS - SEE DESIGN SHEETS 17 18					5282
	ABUTMENT WINGS - SEE DESIGN SHEETS 6 7 & 8					843
	REINFORCING STEEL, EPOXY COATED - TOTAL (LBS.)					70601
* S.S.						
	BARRIER RAILS - SEE DESIGN SHEET 33					2293
	BARRIER RAIL END SECTION - SEE DESIGN SHEET 35					111
	MASKWALLS - SEE DESIGN SHEETS 17 18					88
	ABUTMENT WINGS - SEE DESIGN SHEETS 6 7 & 8					88
	REINFORCING STEEL, STAINLESS - TOTAL (LBS.)					2580
** N.C.						
	#2	PILE SPIRAL		28	38'-6	180
		SPIRAL SPACERS, L 7/8 x 7/8 x 1/8 X 0.70		84	1'-10	108
	REINFORCING STEEL - TOTAL (LBS.)					289

* S.S. SIGNIFIES STAINLESS STEEL REINFORCING
** N.C. SIGNIFIES NON-COATED REINFORCING

NOTE:

DESIGNATION "-A" SIGNIFIES BAR ASSOCIATED WITH THE RAMP A BRIDGE. "-A" NOT SHOWN IN DETAILS FOR CLARITY.

DESIGN FOR 9°41'0" SKEW (L.A.)

134'-9 x 40'-0 WELDED GIRDER BRIDGE

134'-9 SIMPLE SPAN

DECK & ABUTMENT BAR LIST

STA. 1503+40.88, BASELINE U.S. 67 RAMP A TBD

SCOTT COUNTY

IOWA DEPARTMENT OF TRANSPORTATION - HIGHWAY DIVISION

DESIGN SHEET NO. 27 OF 42 FILE NO. 30253 DESIGN NO. 3808

benesch engineers · scientists · planners
Alfred Benesch & Company
205 North Michigan Avenue, Suite 2400
Chicago, Illinois 60601
312-565-0450 Job No. 10061

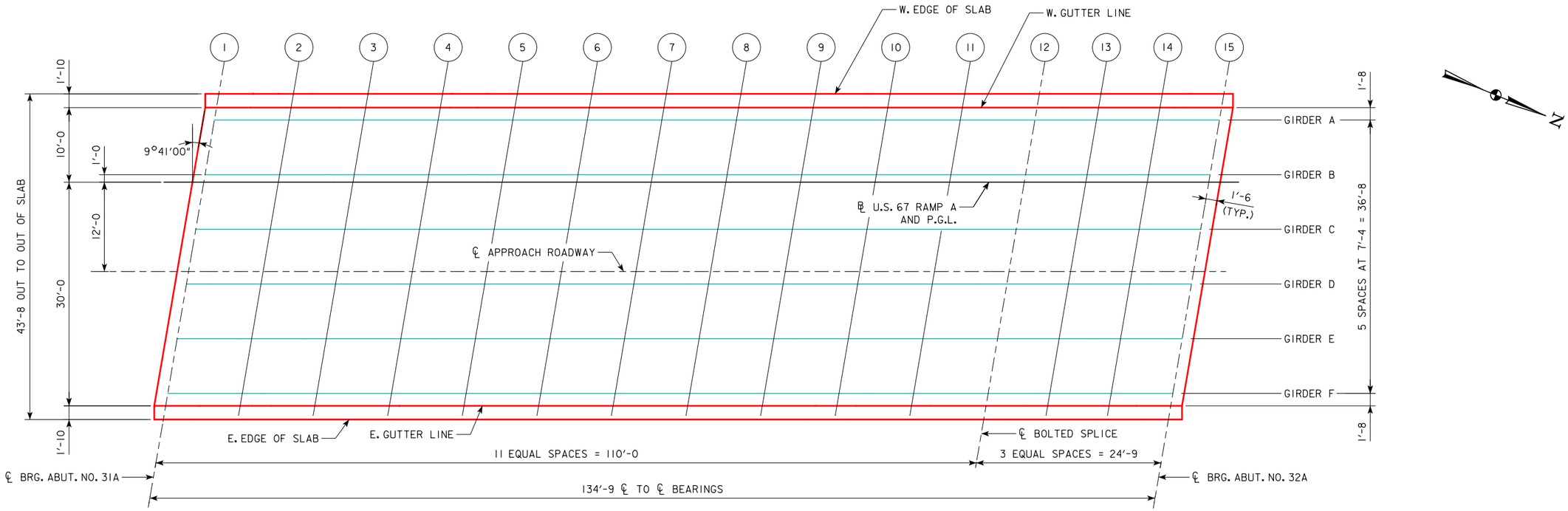

SLAB AND BEAM LINE HAUNCH ELEVATION LAYOUT

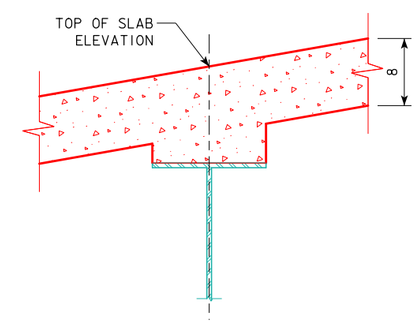

TOP OF SLAB ELEVATIONS

	℄ BRG. ABUT. NO. 31A											℄ BOLTED SPLICE			℄ BRG. ABUT. NO. 32A
LOCATION	LINE 1	LINE 2	LINE 3	LINE 4	LINE 5	LINE 6	LINE 7	LINE 8	LINE 9	LINE 10	LINE 11	LINE 12	LINE 13	LINE 14	LINE 15
WEST EDGE SLAB	593.98	594.51	595.04	595.56	596.07	596.57	597.07	597.56	598.04	598.52	598.99	599.46	599.84	600.21	600.58
WEST GUTTER LINE	593.82	594.35	594.87	595.39	595.90	596.40	596.90	597.39	597.88	598.36	598.83	599.29	599.67	600.05	600.42
℄ GIRDER A	593.83	594.37	594.89	595.41	595.92	596.42	596.92	597.41	597.90	598.38	598.85	599.31	599.69	600.07	600.44
℄ GIRDER B	593.91	594.45	594.97	595.49	596.00	596.51	597.01	597.50	597.98	598.46	598.94	599.40	599.78	600.16	600.53
℄ GIRDER C	593.99	594.53	595.05	595.57	596.08	596.59	597.09	597.58	598.07	598.55	599.02	599.49	599.87	600.25	600.62
℄ APPROACH ROADWAY	594.05	594.59	595.11	595.64	596.15	596.66	597.16	597.65	598.14	598.62	599.09	599.56	599.94	600.32	600.69
℄ GIRDER D	594.07	594.61	595.13	595.65	596.17	596.67	597.18	597.67	598.16	598.64	599.11	599.58	599.96	600.34	600.71
℄ GIRDER E	594.15	594.69	595.21	595.74	596.25	596.76	597.26	597.75	598.24	598.72	599.20	599.67	600.05	600.43	600.80
℄ GIRDER F	594.23	594.77	595.30	595.82	596.33	596.84	597.34	597.84	598.33	598.81	599.29	599.76	600.14	600.52	600.89
EAST GUTTER LINE	594.25	594.79	595.31	595.84	596.35	596.86	597.36	597.86	598.35	598.83	599.31	599.78	600.16	600.54	600.91
EAST EDGE SLAB	594.42	594.95	595.48	596.00	596.52	597.03	597.53	598.03	598.51	599.00	599.47	599.94	600.33	600.70	601.08

DESIGN FOR 9°41'0" SKEW (L.A.)

134'-9 x 40'-0

WELDED GIRDER BRIDGE

134'-9 SIMPLE SPAN

SLAB ELEVATIONS

STA. 1503+40.88, BASELINE U.S. 67 RAMP A TBD

SCOTT COUNTY

IOWA DEPARTMENT OF TRANSPORTATION - HIGHWAY DIVISION

DESIGN SHEET NO. 28 OF 42 FILE NO. 30253 DESIGN NO. 3808

benesch engineers · scientists · planners
Alfred Benesch & Company
205 North Michigan Avenue, Suite 2400
Chicago, Illinois 60601
312-565-0450 Job No. 10061

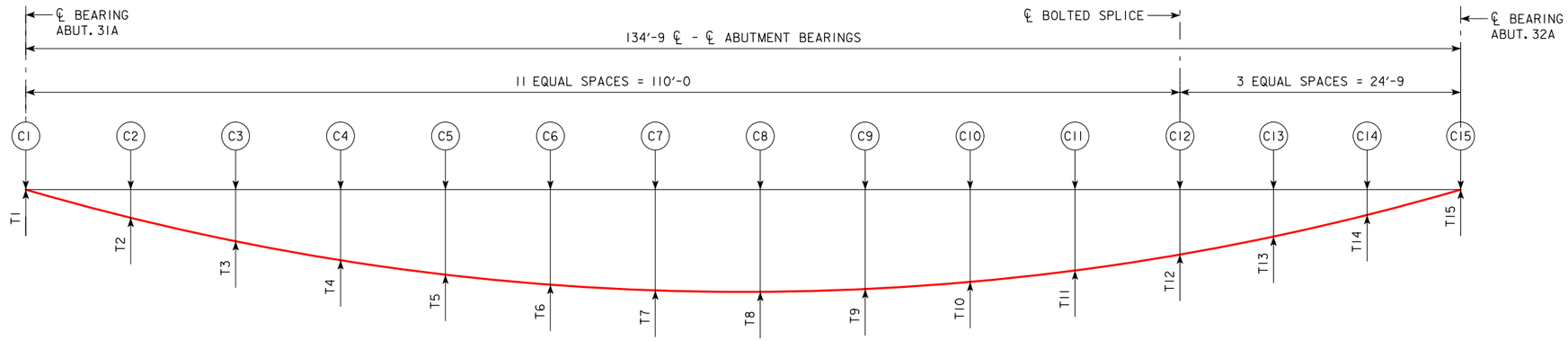

	C1	C2	C3	C4	C5	C6	C7	C8	C9	C10	C11	C12	C13	C14	C15
GIRDERS A & F	0	$1\frac{5}{8}$	$3\frac{3}{16}$	$4\frac{9}{16}$	$5\frac{11}{16}$	$6\frac{7}{16}$	$6\frac{7}{8}$	7	$6\frac{3}{4}$	$6\frac{1}{16}$	$5\frac{1}{16}$	$3\frac{7}{8}$	$2\frac{11}{16}$	$1\frac{3}{8}$	0
GIRDERS B - E	0	$1\frac{9}{16}$	$2\frac{15}{16}$	$4\frac{1}{4}$	$5\frac{5}{16}$	6	$6\frac{7}{16}$	$6\frac{1}{2}$	$6\frac{5}{16}$	$5\frac{5}{8}$	$4\frac{3}{4}$	$3\frac{5}{8}$	$2\frac{1}{2}$	$1\frac{1}{4}$	0
	T1	T2	T3	T4	T5	T6	T7	T8	T9	T10	T11	T12	T13	T14	T15
GIRDERS A & F	0	$2\frac{5}{16}$	$4\frac{1}{2}$	$6\frac{7}{16}$	$8\frac{1}{16}$	$9\frac{1}{8}$	$9\frac{11}{16}$	$9\frac{7}{8}$	$9\frac{1}{2}$	$8\frac{9}{16}$	$7\frac{3}{16}$	$5\frac{1}{2}$	$3\frac{3}{4}$	$1\frac{15}{16}$	0
GIRDERS B - E	0	$2\frac{1}{4}$	$4\frac{5}{16}$	$6\frac{3}{16}$	$7\frac{3}{4}$	$8\frac{3}{4}$	$9\frac{5}{16}$	$9\frac{1}{2}$	$9\frac{1}{8}$	$8\frac{3}{16}$	$6\frac{7}{8}$	$5\frac{1}{4}$	$3\frac{5}{8}$	$1\frac{13}{16}$	0

DEAD LOAD DEFLECTION DIAGRAM

NOTE: ENCIRCLED NUMBERS INDICATE ANTICIPATED DEFLECTION DUE TO CONCRETE ONLY
(INCLUDES DEFLECTIONS DUE TO CONCRETE BARRIERS)

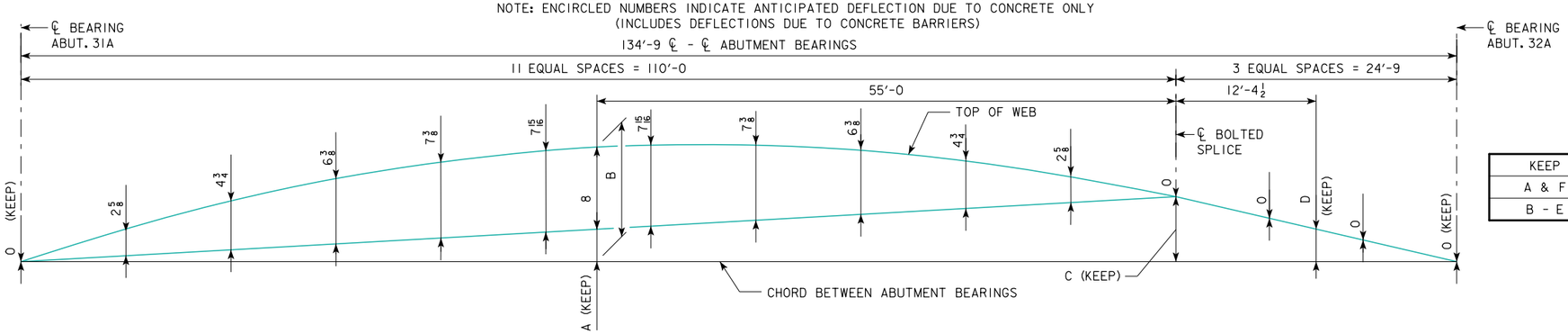

KEEP	A	B	C	D
A & F	$2\frac{15}{16}$	$10\frac{15}{16}$	$5\frac{7}{8}$	$2\frac{15}{16}$
B - E	$2\frac{13}{16}$	$10\frac{13}{16}$	$5\frac{5}{8}$	$2\frac{13}{16}$

GIRDER AS FABRICATED WITH WEBS HORIZONTAL

NOTE: DOES NOT INCLUDE THE DEFLECTION DUE TO STEEL OR CONCRETE

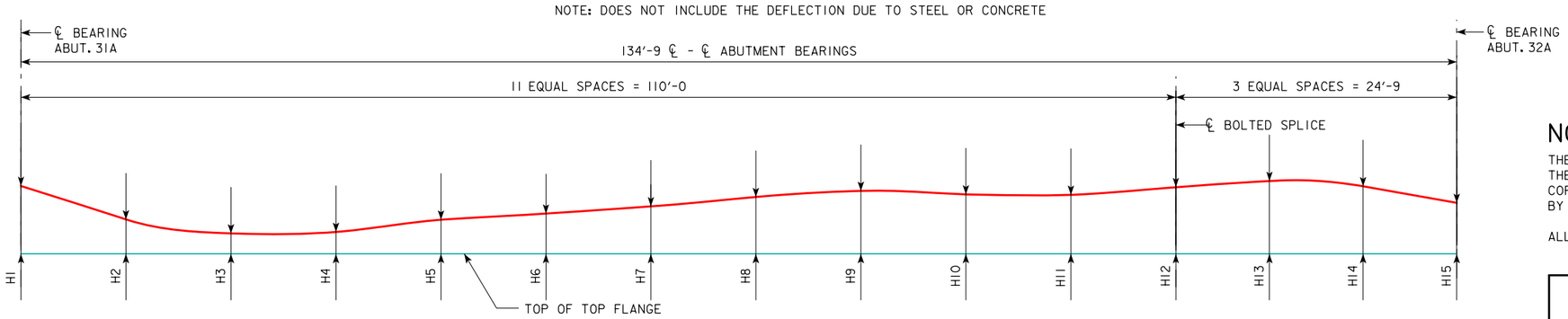

	H1	H2	H3	H4	H5	H6	H7	H8	H9	H10	H11	H12	H13	H14	H15
GIRDERS A & F	1	$\frac{5}{8}$	$\frac{9}{16}$	$\frac{5}{8}$	1	$1\frac{1}{8}$	$1\frac{3}{16}$	$1\frac{7}{16}$	$1\frac{7}{16}$	$1\frac{7}{16}$	$1\frac{7}{16}$	$1\frac{1}{2}$	$1\frac{3}{8}$	$1\frac{3}{16}$	$\frac{3}{4}$
GIRDERS B - E	1	$\frac{9}{16}$	$\frac{7}{16}$	$\frac{7}{16}$	$\frac{3}{4}$	$\frac{13}{16}$	$\frac{15}{16}$	$1\frac{3}{16}$	$1\frac{1}{4}$	$1\frac{1}{4}$	$1\frac{5}{16}$	$1\frac{1}{2}$	$1\frac{7}{16}$	$1\frac{1}{8}$	$\frac{3}{4}$

THEORETICAL CONCRETE HAUNCH DIAGRAM

FOR ESTIMATING PURPOSES ONLY.

NOTES:

THE CONTRACTOR IS RESPONSIBLE FOR ANY MODIFICATIONS TO THE WEB FABRICATION DETAIL AND BEAM SEAT ELEVATIONS (AND CORRESPONDING BOTTOM OF ABUTMENT FOOTING) MADE NECESSARY BY ELIMINATING THE BOLTED SPLICE.

ALL NUMBERS SHOWN ARE IN INCHES UNLESS OTHERWISE NOTED.

DESIGN FOR 9°41'0" SKEW (L.A.)

134'-9 x 40'-0
WELDED GIRDER BRIDGE

134'-9 SIMPLE SPAN

WEB FABRICATION DETAILS

STA. 1503+40.88, BASELINE U.S. 67 RAMP A TBD

SCOTT COUNTY

IOWA DEPARTMENT OF TRANSPORTATION - HIGHWAY DIVISION

DESIGN SHEET NO. 29 OF 42 FILE NO. 30253 DESIGN NO. 3808

benesch engineers · scientists · planners
Alfred Benesch & Company
205 North Michigan Avenue, Suite 2400
Chicago, Illinois 60601
312-565-0450 Job No. 10061

BENCH MARK NO. 500: STA. 6781+18.92 LT. 161.19' ELEV. 575.797,
CHISELED "X" IN BOLT E. SIDE CONCRETE STRUCTURE.

TABLE OF BEAM LINE HAUNCH ELEVATIONS

GIRDER	℄ BRG. ABUT. NO. 31A											℄ BOLTED SPLICE			℄ BRG. ABUT. NO. 32A
	LINE 1	LINE 2	LINE 3	LINE 4	LINE 5	LINE 6	LINE 7	LINE 8	LINE 9	LINE 10	LINE 11	LINE 12	LINE 13	LINE 14	LINE 15
A	593.17	593.83	594.49	595.12	595.73	596.29	596.83	597.33	597.79	598.21	598.60	598.97	599.25	599.51	599.77
B	593.25	593.91	594.55	595.18	595.78	596.34	596.88	597.37	597.84	598.27	598.67	599.04	599.32	599.59	599.86
C	593.33	593.99	594.63	595.26	595.86	596.42	596.96	597.46	597.93	598.35	598.75	599.13	599.41	599.68	599.95
D	593.41	594.07	594.71	595.34	595.94	596.51	597.04	597.54	598.02	598.44	598.84	599.21	599.50	599.77	600.04
E	593.49	594.15	594.79	595.42	596.03	596.59	597.13	597.63	598.10	598.53	598.93	599.30	599.59	599.86	600.13
F	593.57	594.24	594.89	595.53	596.14	596.71	597.25	597.76	598.22	598.65	599.04	599.41	599.70	599.96	600.22

MISCELLANEOUS DATA TABLE

	GIRDER		℄ BRG. ABUT. NO. 31A											℄ BOLTED SPLICE			℄ BRG. ABUT. NO. 32A
			1	2	3	4	5	6	7	8	9	10	11	12	13	14	15
ANTICIPATED DEFLECTION DUE TO SLAB (IN.)	A		0	$1\frac{7}{16}$	$2\frac{3}{4}$	$3\frac{15}{16}$	$4\frac{15}{16}$	$5\frac{9}{16}$	$5\frac{15}{16}$	$6\frac{1}{16}$	$5\frac{13}{16}$	$5\frac{1}{4}$	$4\frac{3}{8}$	$3\frac{5}{16}$	$2\frac{5}{16}$	$1\frac{3}{16}$	0
	B		0	$1\frac{5}{16}$	$2\frac{1}{2}$	$3\frac{5}{8}$	$4\frac{9}{16}$	$5\frac{1}{8}$	$5\frac{1}{2}$	$5\frac{9}{16}$	$5\frac{3}{8}$	$4\frac{13}{16}$	$4\frac{1}{16}$	$3\frac{1}{16}$	$2\frac{1}{8}$	$1\frac{1}{16}$	0
	C		0	$1\frac{5}{16}$	$2\frac{1}{2}$	$3\frac{5}{8}$	$4\frac{9}{16}$	$5\frac{1}{8}$	$5\frac{1}{2}$	$5\frac{9}{16}$	$5\frac{3}{8}$	$4\frac{13}{16}$	$4\frac{1}{16}$	$3\frac{1}{16}$	$2\frac{1}{8}$	$1\frac{1}{16}$	0
	D		0	$1\frac{5}{16}$	$2\frac{1}{2}$	$3\frac{5}{8}$	$4\frac{9}{16}$	$5\frac{1}{8}$	$5\frac{1}{2}$	$5\frac{9}{16}$	$5\frac{3}{8}$	$4\frac{13}{16}$	$4\frac{1}{16}$	$3\frac{1}{16}$	$2\frac{1}{8}$	$1\frac{1}{16}$	0
	E		0	$1\frac{5}{16}$	$2\frac{1}{2}$	$3\frac{5}{8}$	$4\frac{9}{16}$	$5\frac{1}{8}$	$5\frac{1}{2}$	$5\frac{9}{16}$	$5\frac{3}{8}$	$4\frac{13}{16}$	$4\frac{1}{16}$	$3\frac{1}{16}$	$2\frac{1}{8}$	$1\frac{1}{16}$	0
	F		0	$1\frac{7}{16}$	$2\frac{3}{4}$	$3\frac{15}{16}$	$4\frac{15}{16}$	$5\frac{9}{16}$	$5\frac{15}{16}$	$6\frac{1}{16}$	$5\frac{13}{16}$	$5\frac{1}{4}$	$4\frac{3}{8}$	$3\frac{5}{16}$	$2\frac{5}{16}$	$1\frac{3}{16}$	0
CROSS SLOPE ADJUSTMENTS (IN.)	ALL		$\frac{1}{4}$														
ALLOWABLE FIELD HAUNCH (IN. & FT.)	MAX.	ALL	$2\frac{3}{4}$ (0.229)														
	MIN.	ALL	$-\frac{1}{4}$ (-0.021)														

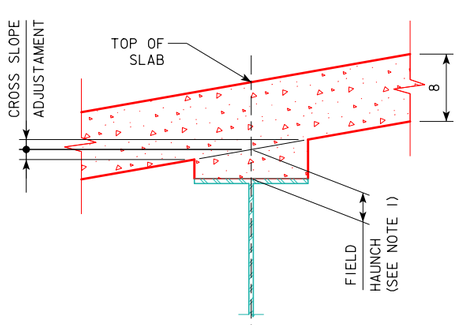

HAUNCH DETAIL

NOTE 1:

TO CALCULATE FIELD HAUNCH NEEDED AT EACH LOCATION, SURVEY THE BEAM TOPS CONSISTENT WITH THE SPACINGS SHOWN ON THE "HAUNCH LOCATIONS" DIAGRAM. SUBTRACT THE SURVEYED BEAM SHOT FROM THE "BEAM LINE HAUNCH ELEVATION" THIS VALUE WILL BE THE HAUNCH NEEDED (SEE "FIELD HAUNCH" IN HAUNCH DETAIL). THE "BEAM LINE HAUNCH ELEVATION" INCLUDES ADJUSTMENTS FOR SLAB THICKNESSES AND ANTICIPATED DEFLECTIONS. NO ADDITIONAL CALCULATIONS ARE REQUIRED. IF THE FIELD HAUNCH EXCEEDS THE MAXIMUMS AND MINIMUMS, SHOWN IN INCHES AND DECIMALS OF FEET IN THE MISCELLANEOUS DATA TABLE, ADJUSTMENTS TO THE GRADE OR ADDITIONAL HAUNCH REINFORCEMENT WILL BE REQUIRED.

NOTE:

BRIDGE SEAT ELEVATIONS ARE SET BASED ON THEORETICAL CAMBER AND BEAM DEFLECTIONS. THESE BRIDGE SEATS WILL PROVIDE A THEORETICAL BEAM HAUNCH WITHIN DESIGN PARAMETERS. FIELD HAUNCHES ARE DETERMINED USING SURVEYED TOP OF BEAM ELEVATIONS AND "BEAM LINE HAUNCH ELEVATION" DATA. ALLOWABLE MAXIMUM AND MINIMUM "FIELD HAUNCH" VALUES ARE GIVEN IN INCHES AND DECIMALS OF FEET IN THE "MISCELLANEOUS DATA" TABLE. "CROSS SLOPE ADJUSTMENT" VALUES WILL AID THE CONTRACTOR IN DETERMINING ACTUAL FORMED HAUNCH DIMENSIONS AT THE EDGES OF THE TOP FLANGE.

NOTE:
HAUNCH LOCATIONS ARE AT THE SAME LOCATIONS AS THE ENCIRCLED NUMBERS SHOWN ON DESIGN SHEET 28.

benesch
engineers · scientists · planners
Alfred Benesch & Company
205 North Michigan Avenue, Suite 2400
Chicago, Illinois 60601
312-565-0450 Job No. 10061

DESIGN FOR 9°41'0" SKEW (L.A.)

134'-9 x 40'-0
WELDED GIRDER BRIDGE

134'-9 SIMPLE SPAN

BEAM LINE HAUNCH DATA

STA. 1503+40.88, BASELINE U.S. 67 RAMP A TBD

SCOTT COUNTY

IOWA DEPARTMENT OF TRANSPORTATION - HIGHWAY DIVISION

DESIGN SHEET NO. 30 OF 42 FILE NO. 30253 DESIGN NO. 3808

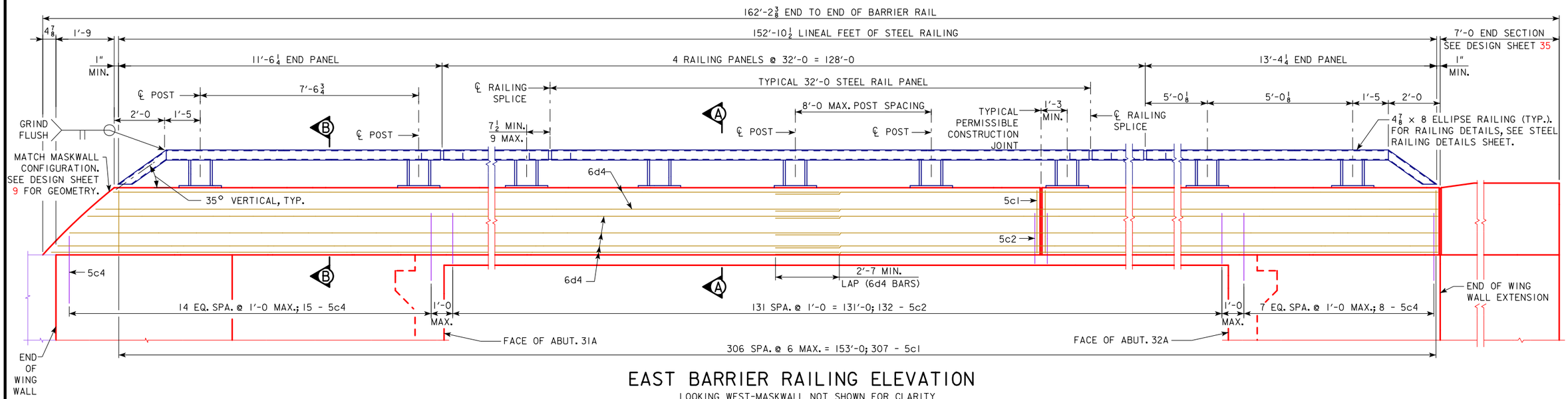

EAST BARRIER RAILING ELEVATION

LOOKING WEST-MASKWALL NOT SHOWN FOR CLARITY

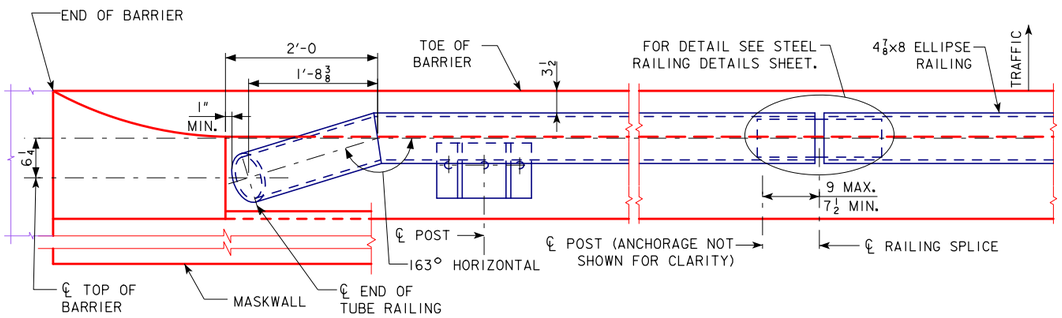

EAST BARRIER RAILING PART PLAN

(SOUTH END)

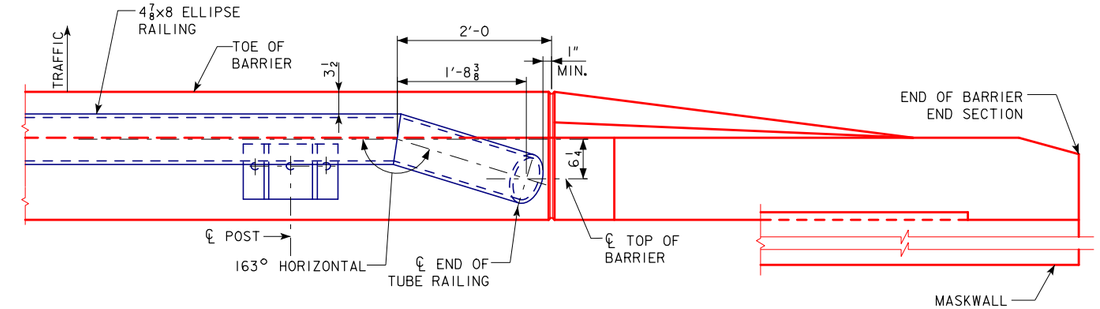

EAST BARRIER RAILING PART PLAN

(NORTH END)

N

NOTES:

DESIGNATION "-A" SIGNIFIES BAR ASSOCIATED WITH THE RAMP A BRIDGE. "-A" NOT SHOWN IN DETAILS FOR CLARITY.

SEE DESIGN SHEET 33 FOR SECTIONS A-A AND B-B DETAILS, BARRIER RAILING JOINT DETAILS, BARRIER RAILING NOTES AND BAR LIST.

DESIGN FOR 9°41'0" SKEW (L.A.)

134'-9 x 40'-0

WELDED GIRDER BRIDGE

134'-9 SIMPLE SPAN

EAST TRAFFIC BARRIER DETAILS

STA. 1503+40.88, BASELINE U.S. 67 RAMP A — TBD

SCOTT COUNTY

IOWA DEPARTMENT OF TRANSPORTATION - HIGHWAY DIVISION

DESIGN SHEET NO. 31 OF 42 FILE NO. 30253 DESIGN NO. 3808

benesch engineers · scientists · planners
Alfred Benesch & Company
205 North Michigan Avenue, Suite 2400
Chicago, Illinois 60601
312-565-0450 Job No. 10061

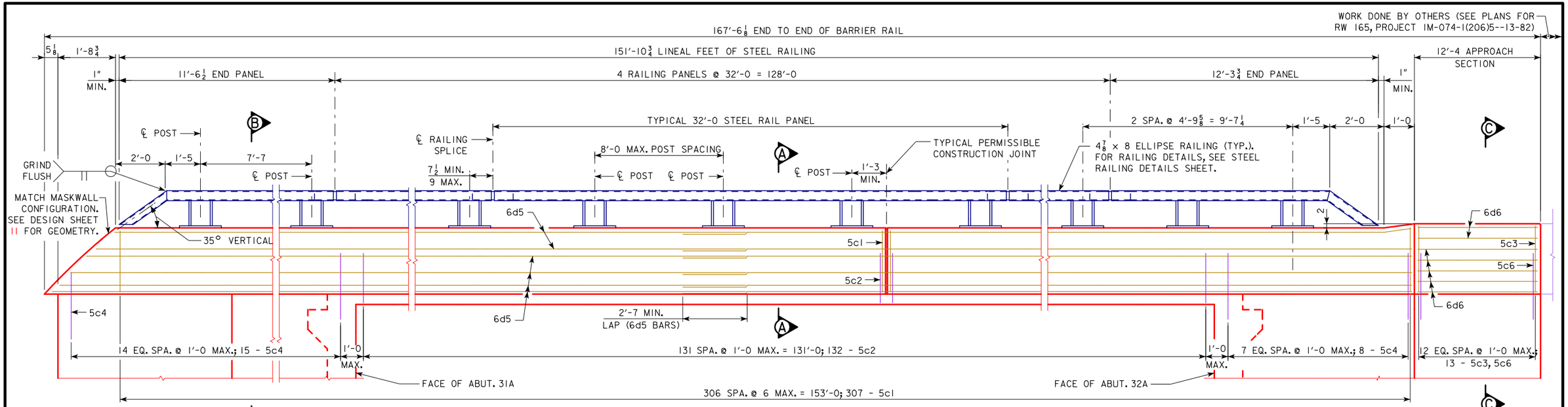

WEST BARRIER RAILING ELEVATION

LOOKING WEST
(POINTS OF INTERSECTION NOT SHOWN FOR CLARITY)

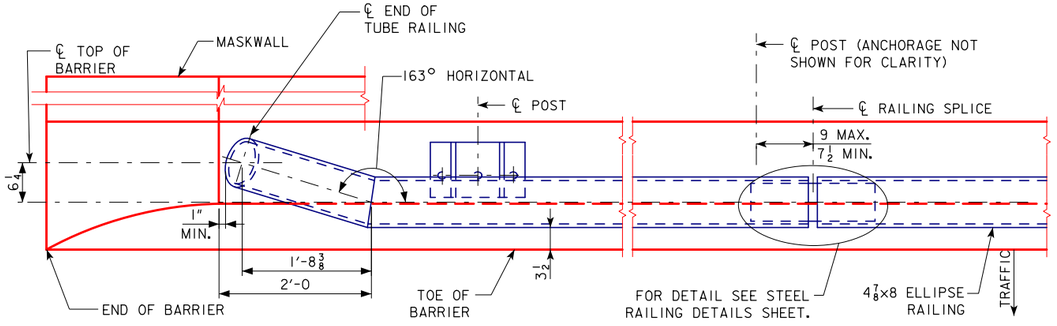

WEST BARRIER RAILING PART PLAN

(SOUTH END)

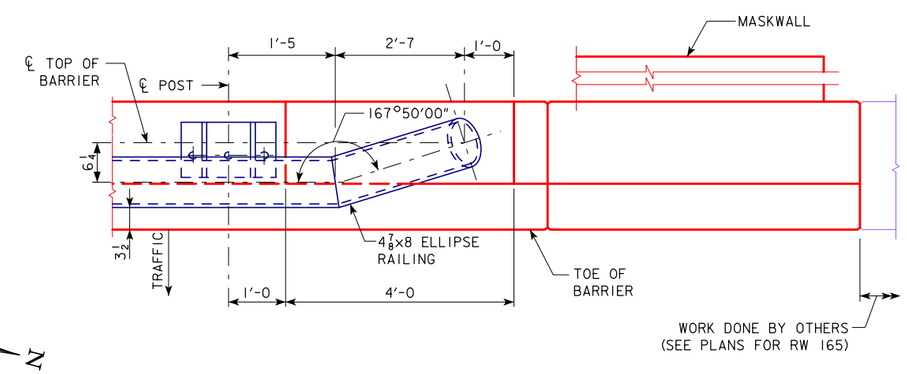

WEST BARRIER RAILING PART PLAN

(NORTH END)

N

NOTES:

DESIGNATION "-A" SIGNIFIES BAR ASSOCIATED WITH THE RAMP A BRIDGE. "-A" NOT SHOWN IN DETAILS FOR CLARITY.

SEE DESIGN SHEET 33 FOR SECTIONS A-A, B-B AND C-C BARRIER RAILING JOINT DETAILS, BARRIER RAILING NOTES AND BAR LIST.

DESIGN FOR 9°41'0" SKEW (L.A.)

134'-9 x 40'-0
WELDED GIRDER BRIDGE

134'-9 SIMPLE SPAN

WEST TRAFFIC BARRIER DETAILS

STA. 1503+40.88, BASELINE U.S. 67 RAMP A TBD

SCOTT COUNTY

IOWA DEPARTMENT OF TRANSPORTATION - HIGHWAY DIVISION

DESIGN SHEET NO. 32 OF 42 FILE NO. 30253 DESIGN NO. 3808

benesch engineers · scientists · planners
Alfred Benesch & Company
205 North Michigan Avenue, Suite 2400
Chicago, Illinois 60601
312-565-0450 Job No. 10061

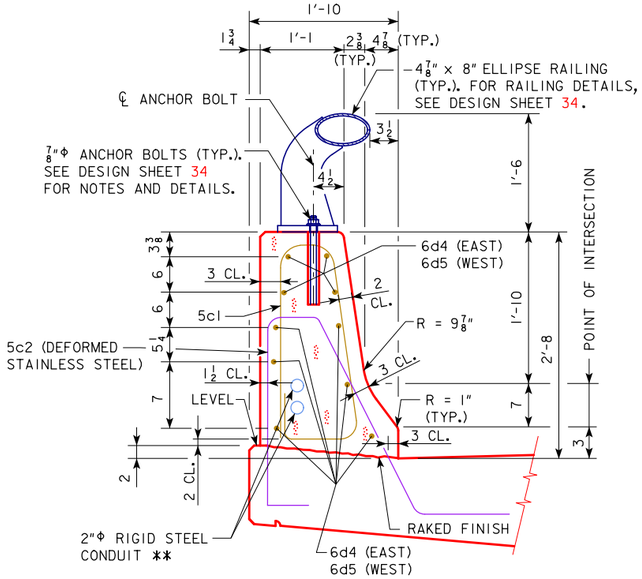

SECTION A-A

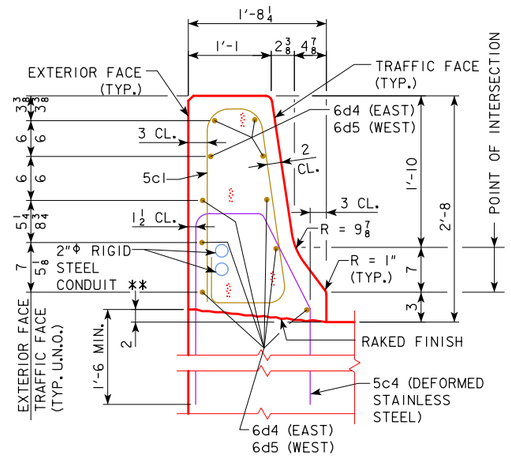

SECTION B-B

SHOWN WITHOUT TRAFFIC RAILING FOR CLARITY

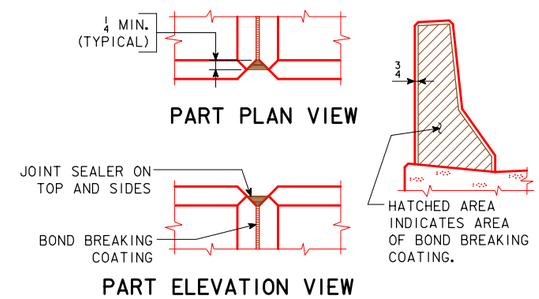

BARRIER RAIL JOINT DETAILS

BARRIER RAILING NOTES:

THE CONCRETE BARRIER RAILING IS TO BE BID ON A LINEAL FOOT BASIS MEASURED FROM END TO END OF RAILING. THE NUMBER OF LINEAL FEET OF BARRIER RAILING INSTALLED WILL BE PAID FOR AT THE CONTRACT PRICE PER LINEAL FOOT BASED ON PLAN QUANTITIES. PRICE BID FOR "CONCRETE BARRIER RAILING" SHALL BE FULL COMPENSATION FOR FURNISHING ALL MATERIAL, EXCLUDING REINFORCING STEEL, AND ALL OF THE EQUIPMENT AND LABOR REQUIRED TO ERECT THE RAILING IN ACCORDANCE WITH THESE PLANS AND CURRENT SPECIFICATIONS.

IF CONDUIT IS REQUIRED IN THIS PLAN THE RIGID STEEL CONDUIT, JUNCTION BOXES AND FITTINGS INCLUDING LABOR AND ANY ADDITIONAL WORK TO DO THE INSTALLATION IS CONSIDERED INCIDENTAL TO THE COST OF THE RAILING.

THE PERMISSIBLE CONSTRUCTION JOINTS ARE TO BE PLACED BETWEEN VERTICAL BARS AT A MINIMUM SPACING OF 20 FEET. CONSTRUCTION JOINT CONTACT SURFACES ARE TO BE COATED WITH AN APPROVED BOND BREAKER. COST OF THE JOINT SEALER AND BOND BREAKER SHALL BE CONSIDERED INCIDENTAL TO OTHER CONSTRUCTION.

CONCRETE BARRIER RAILINGS PLACED USING THE SLIPFORM METHOD WILL REQUIRE THE USE OF A CLASS BR CONCRETE IN ACCORDANCE WITH ARTICLE 2513.03, A, 2, OF THE STANDARD SPECIFICATIONS. CAST-IN-PLACE BARRIER RAILINGS SHALL USE HIGH PERFORMANCE CONCRETE. CLASS D CONCRETE IS NOT PERMITTED FOR CONCRETE BARRIER RAILINGS (CAST-IN-PLACE OR SLIPFORMED METHOD).

TOP OF THE BARRIER RAILING IS TO BE PARALLEL TO THE THEORETICAL GRADE.

CROSS SECTIONAL AREA OF THE 2'-8 CONCRETE BARRIER RAILING = 3.31 SQUARE FEET.

CROSS SECTIONAL AREA OF THE 2'-10 CONCRETE BARRIER RAILING = 3.49 SQUARE FEET.

THIS BARRIER MEETS THE REQUIREMENTS OF TEST LEVEL 5 (TL-5).

PLACE POST AND POST ANCHOR BOLTS NORMAL TO GRADE AND RAILINGS PARALLEL TO GRADE.

MINIMUM CLEAR DISTANCE FROM FACE OF CONCRETE TO NEAR REINFORCING BAR IS TO BE 2" UNLESS OTHERWISE NOTED OR SHOWN.

ON THE NON-TRAFFIC SIDE OF THE BARRIER RAILING, PLACE THE 5c1 OR 5c3 BARS WITH A 3" CLEARANCE AND THE 5c2 OR 5c4 & 5c6 BARS WITH A 1 1/2" CLEARANCE TO PROVIDE ADEQUATE SPACE BETWEEN THE STEEL CONDUIT AND THE STAINLESS STEEL 5c2 OR 55c4 & 5c6BARS TO MEET THE CONSTRUCTION REQUIREMENTS OF I.M. 452.

NOTE THAT SOME OF THE 6d4-6d6 BARS ARE TO BE PLACED OUTSIDE OF THE 5c1 OR 5c3 BARS, BETWEEN THE 5c1 OR 5c3 BARS AND THE 5c2 OR 5c4 & 5c6 BARS, AS SHOWN IN THE DETAIL.

ALL BARRIER RAILING REINFORCING STEEL IS TO BE INCLUDED WITH THE SUPERSTRUCTURE REINFORCING STEEL.

THE STEEL CONDUIT SHALL BE SECURELY TIED AT EVERY 3'-0 INTERSECTION WITH THE 5c1 OR 5c3 BARS TO AVOID CONTACT WITH THE STAINLESS STEEL 5c2 OR 5c4 & 5c6 BARS.

FOR RIGID STEEL CONDUIT DETAILS, SEE DESIGN SHEET 36.

THE JOINT SEALER SHALL BE LIGHT GRAY NONSAG LATEX CAULKING SEALER MARKETED FOR OUTDOOR USE. NO TESTING OR CERTIFICATION IS REQUIRED.

* CUT IN FIELD AS REQUIRED

** CONTRACTOR TO PROVIDE SUPPORT FOR CONDUIT AS REQUIRED TO MAINTAIN 1 1/2" CLEARANCE FROM STAINLESS STEEL REINFORCING

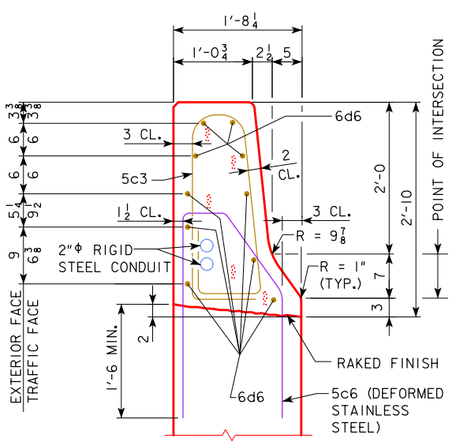

SECTION C-C

EPOXY REINF. STEEL-TWO BARRIER RAILS

SECTION	BAR	LOCATION	SHAPE	NO.	LENGTH	WEIGHT
RAMP A	5c1-A	VERTICAL		614	7'-8	4910
	5c3-A	VERTICAL		13	8'-0	108
	6d4-A	LONGITUDINAL		50	33'-0	2478
	6d5-A	LONGITUDINAL		50	34'-4	2578
	6d6-A	LONGITUDINAL		10	12'-0	180
(INCLUDE WITH SUPERSTRUCTURE REINFORCING)				TOTAL (LBS.)		10256

STAINLESS STEEL-TWO BARRIER RAILS

SECTION	BAR	LOCATION	SHAPE	NO.	LENGTH	WEIGHT
RAMP A	5c2-A	VERTICAL		264	6'-11	1905
	5c4-A	VERTICAL		46	6'-3	300
	5c6-A	VERTICAL		13	6'-6	88
(INCLUDE WITH SUPERSTRUCTURE REINFORCING)				TOTAL (LBS.)		2293

BENT BAR DETAILS

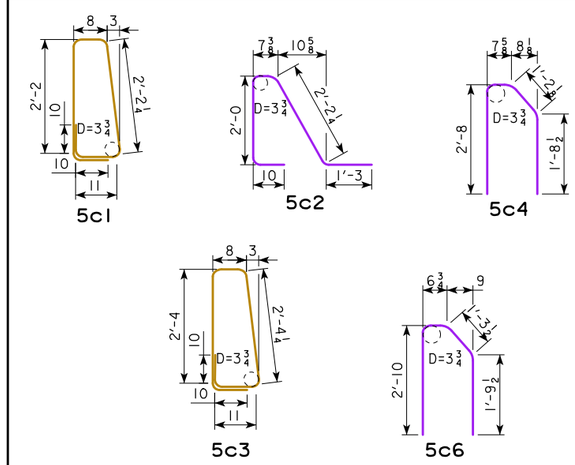

CONCRETE PLACEMENT SUMMARY

SECTION		TOTAL
2'-8 RAILING SECTION, EAST	155.2' @ 0.122 CU. YD. PER FT.	18.9
2'-8 RAILING SECTION, WEST	155.2' @ 0.122 CU. YD. PER FT.	18.9
2'-10 RAILING SECTION, WEST	12.3' @ 0.129 CU. YD. PER FT.	1.6
	TOTAL (CU. YD.)	39.4

BARRIER RAILING QUANTITIES

ITEM	UNIT	QUANTITY
CONCRETE BARRIER RAILING (TOTAL)	L.F.	329.8
STRUCTURAL STEEL RAILING, TRAFFIC (TOTAL)	L.F.	304.8

DESIGN FOR 9°41'0" SKEW (L.A.)

134'-9 x 40'-0

WELDED GIRDER BRIDGE

134'-9 SIMPLE SPAN

TRAFFIC BARRIER DETAILS

STA. 1503+40.88, BASELINE U.S. 67 RAMP A TBD

SCOTT COUNTY

IOWA DEPARTMENT OF TRANSPORTATION - HIGHWAY DIVISION

DESIGN SHEET NO. 33 OF 42 FILE NO. 30253 DESIGN NO. 3808

benesch engineers · scientists · planners
Alfred Benesch & Company
205 North Michigan Avenue, Suite 2400
Chicago, Illinois 60601
312-565-0450 Job No. 10061

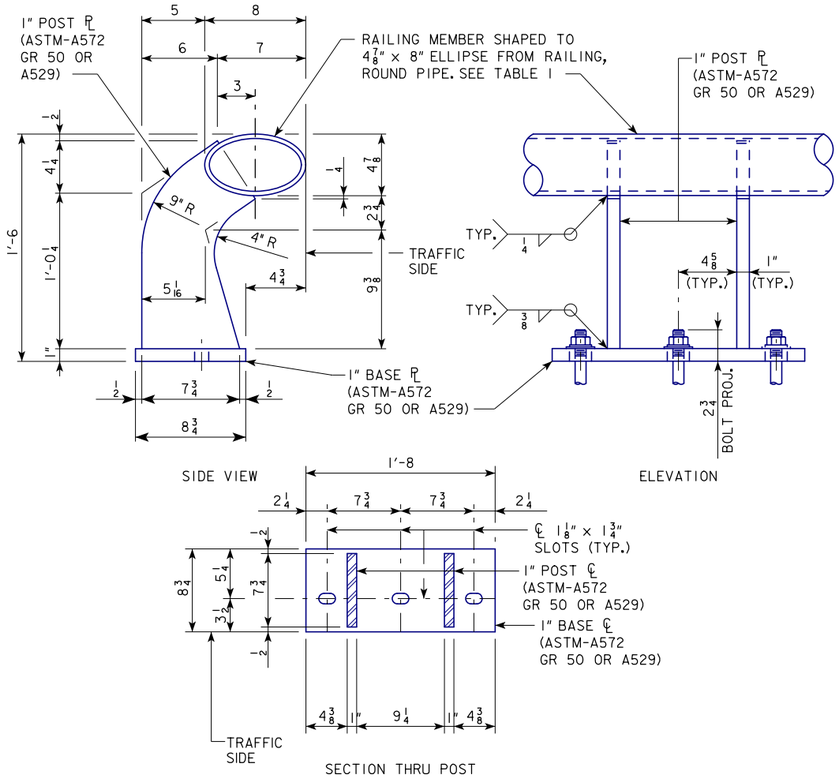

ELLIPTICAL TUBE WITH RAILING POST AND ANCHORAGE DETAILS

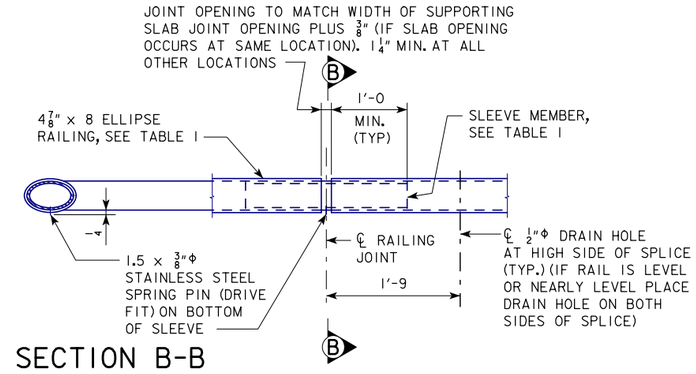

SECTION B-B

ELLIPSE RAILING SPLICE

NOTE:
THE MAJOR AND MINOR DIAMETERS OF THE RAILING MEMBER MAY VARY +/- 0.1875 INCHES FROM PLAN DIMENSIONS. HOWEVER, THE DIFFERENCE BETWEEN THE OUTSIDE DIAMETERS OF THE SLEEVE AND THE INSIDE DIAMETERS OF THE RAILING SHALL NOT EXCEED 0.125 INCHES ALONG THE MAJOR OR MINOR AXIS. THE MAXIMUM GAP ALONG THE 45° AXIS OF THE SLEEVE MAY BE 1/4" MAX.

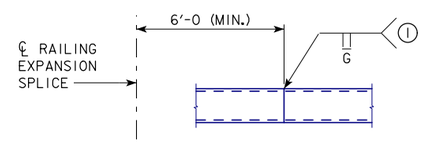

RAILING SHOP SPLICE DETAIL

(1) ONE SHOP SPLICE PER PANEL IS PERMITTED WITH MINIMUM 85 PERCENT PENETRATION. THE WELD MAY BE SQUARE GROOVE, DOUBLE VEE GROOVE, OR SINGLE GROOVE. GRIND SMOOTH.

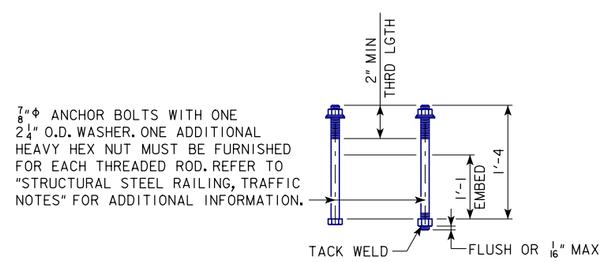

CAST-IN-PLACE ANCHOR BOLT OPTIONS

STRUCTURAL STEEL RAILING, TRAFFIC NOTES:

STRUCTURAL STEEL BARRIER JOINTS ARE TO BE LOCATED AS SHOWN.

THE STRUCTURAL STEEL RAILING IS TO BE BID ON A PER LINEAR FOOT BASIS MEASURED FROM END TO END OF STEEL RAILING.

THE NUMBER OF LINEAR FOOT OF STRUCTURAL STEEL RAILING INSTALLED WILL BE PAID FOR AT THE CONTRACT UNIT PRICE PER FOOT BASED ON PLAN QUANTITIES.

PRICE BID FOR "STRUCTURAL STEEL RAILING, TRAFFIC" SHALL BE FULL COMPENSATION FOR FURNISHING ALL MATERIAL, AND ALL EQUIPMENT AND LABOR REQUIRED TO ERECT THE RAILING IN ACCORDANCE WITH THESE PLANS AND CURRENT SPECIFICATIONS.

ALL RAILINGS, POSTS, SLEEVES, BASE PLATES, AND SHIMS SHALL BE GALVANIZED AFTER FABRICATION IN ACCORDANCE WITH THE REQUIREMENTS OF ASTM A123.

OPTIONAL CAST-IN-PLACE ANCHOR BOLTS TO COMPLY WITH ASTM F1554 GRADE 105. HEX NUTS TO COMPLY WITH ASTM A563 GRADE DH. WASHERS TO COMPLY WITH ASTM F436. GALVANIZING IN ACCORDANCE WITH ASTM F2329.

ANCHOR BOLTS SHALL BE 7/8" DIA., A193 GR. B7, BE FULLY THREADED WITH HEAVY HEX NUTS AND ONE HARDENED WASHER AND ONE 2 1/4" O.D. WASHER EACH. EMBED THREADED RODS 10 1/2" MIN. INTO CONCRETE PARAPET. ANCHOR BOLTS, NUTS, AND WASHERS SHALL BE GALVANIZED IN ACCORDANCE WITH ASTM F2329. ADHESIVE BONDING MATERIAL SYSTEM SHALL BE IN ACCORDANCE WITH MATERIALS I.M. 491.11. INSTALLED ANCHORS SHALL BE CAPABLE OF OBTAINING AN ULTIMATE LOAD PER THREADED ROD OF 36 KIPS IN TENSION FOR THE SPACING AND EDGE DISTANCE SHOWN IN THE PLANS. INSTALL AND FIELD TEST ANCHORS IN ACCORDANCE WITH THE DEVELOPMENTAL SPECIFICATION, "INSTALLING ADHESIVE-BONDED ANCHORS AND DOWELS FOR TRAFFIC RAILINGS".

TESTING NOTE FOR TUBE STEEL:

THE RESULTS OF THE FOLLOWING TEST SHALL BE SUBMITTED AS A CERTIFIED TEST REPORT TO THE CENTRAL MATERIALS OFFICE IN AMES ALONG WITH A CERTIFIED MILL TEST REPORT. IN ADDITION, A 1 FOOT LONG TUBE SAMPLE FROM THE FABRICATING SHOP SHALL ALSO BE SUBMITTED TO THE CENTRAL MATERIALS OFFICE IN AMES FOR VERIFICATION TESTING.

TESTING IS NOT REQUIRED FOR HOT ROLLED TUBE STEEL CONFORMING TO ASTM A501.

ALL COLD FORMED TUBE STEEL SHALL BE TESTED IN ACCORDANCE WITH THE REQUIREMENTS OF ASTM E436 - "DROP-WEIGHT TEAR TESTS OF FERRITIC STEELS", EXCEPT WITH THE FOLLOWING MODIFICATIONS:

ALL TESTS SHALL BE PERFORMED BY THE PRODUCING MILL PRIOR TO FABRICATION. MATERIAL SAMPLES SHALL BE GALVANIZED IN ACCORDANCE WITH ASTM A123 PRIOR TO TESTING.

THE TESTING SHALL BE CONDUCTED AT A TEMPERATURE OF 0 DEGREES FAHRENHEIT ON A 3" x 1'-0 SPECIMEN.

IF THE AVERAGE PERCENT SHEAR AREA FALLS BELOW 50 PERCENT THE MATERIAL REPRESENTED BY THESE TESTS SHALL BE REJECTED.

ALL MATERIALS SHALL BE ACCEPTED ON THE BASIS OF COMPLYING TEST RESULTS AND CERTIFIED MILL TEST REPORT.

TO FACILITATE ACCEPTANCE AND REJECTION OF MATERIAL, THE MANUFACTURER OF THE STRUCTURAL STEEL SHAPE SHALL IDENTIFY THE PRODUCT WITH THE STEEL HEAT NUMBER THAT IS TRACEABLE AT THE TIME OF ACCEPTANCE. THE HEAT NUMBER SHALL BE PLACED AT INTERVALS NOT TO EXCEED 4'-0.

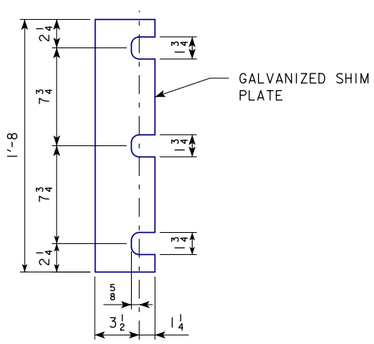

SHIM PLATE DETAIL

NOTE:
PROVIDE 2-1/16" GALVANIZED STEEL SHIMS FOR EACH RAIL POST, TO BE USED AS REQUIRED.

TABLE I

APPROVED RAILING MATERIAL		
4 7/8 x 8 ELLIPSE RAILING	SLEEVE MEMBER (AT RAILING SPLICE)	
MATERIAL	MATERIAL	THICKNESS
6" DIA. STD. PIPE ASTM-A53 E OR S GRADE B	ASTM-A53-B	0.353"
	A36 OR A500 GR. B	0.339"
	API-5LX52	0.224"
6" DIA., 0.280" WALL THICKNESS ASTM-A501	ASTM-A53-B	0.353"
	A36 OR A500 GR. B	0.339"
	API-5LX52	0.224"
6 5/8" O.D. x 0.188" TUBE API-5LX52	ASTM-A53-B	0.339"
	A36 OR A500 GR. B	0.325"
	API-5LX52	0.216"

DESIGN FOR 9°41'0" SKEW (L.A.)

134'-9 x 40'-0 WELDED GIRDER BRIDGE

134'-9 SIMPLE SPAN

TRAFFIC RAILING DETAILS

STA. 1503+40.88, BASELINE U.S. 67 RAMP A — TBD

SCOTT COUNTY

IOWA DEPARTMENT OF TRANSPORTATION - HIGHWAY DIVISION

DESIGN SHEET NO. 34 OF 42 FILE NO. 30253 DESIGN NO. 3808

benesch engineers · scientists · planners
Alfred Benesch & Company
205 North Michigan Avenue, Suite 2400
Chicago, Illinois 60601
312-565-0450 Job No. 10061

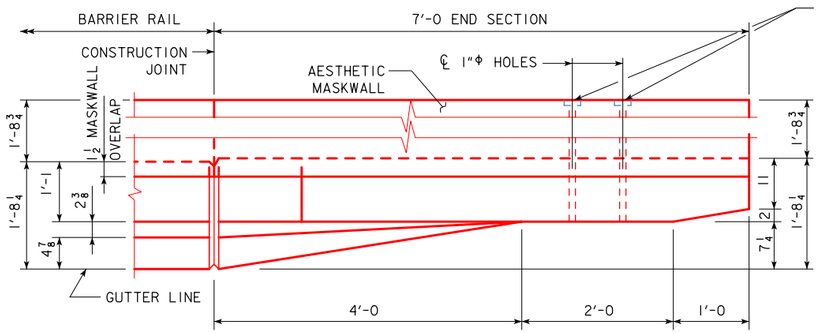

EMBED 3" PVC TO RECESS WASHERS AND NUTS FOR FLUSH FINISH. SEE DESIGN SHEET 13 FOR DETAILS. COST TO BE INCLUDED IN PRICE BID FOR CONCRETE BARRIER RAILING.

PART PLAN VIEW

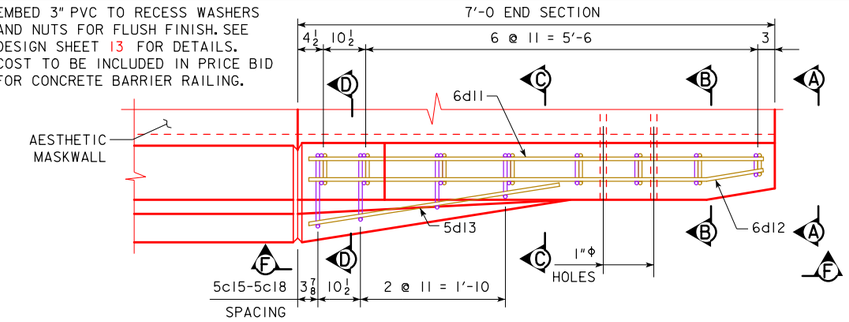

PART VIEW E-E

(MASKWALL 1½" OVERLAP NOT SHOWN FOR CLARITY)

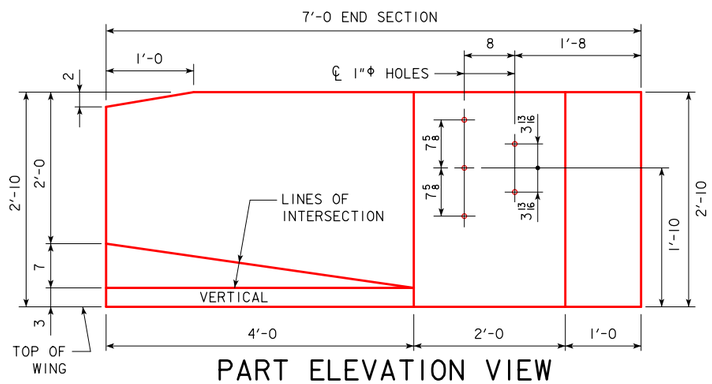

PART ELEVATION VIEW

PROVIDE 5 HOLES FORMED WITH 1"Φ PLASTIC CONDUIT. COST TO BE INCLUDED IN PRICE BID FOR CONCRETE BARRIER RAILING.

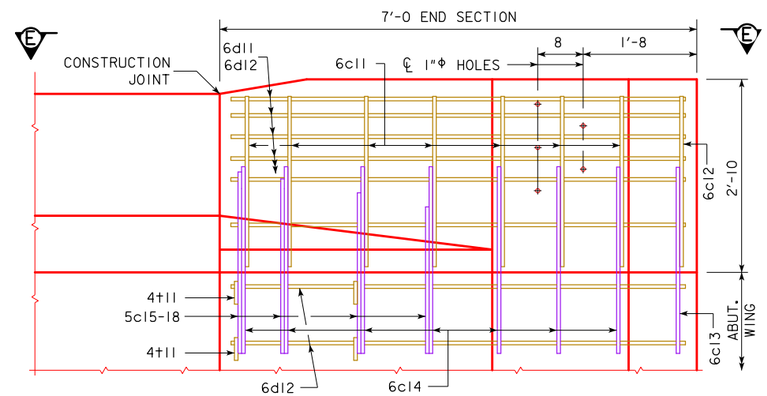

PART VIEW F-F

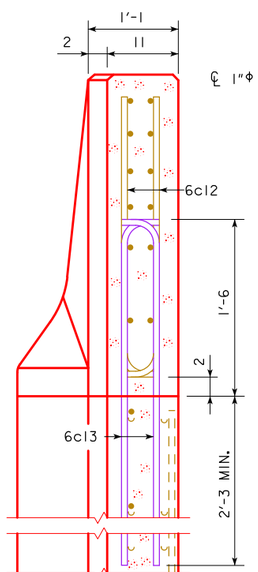

VIEW A-A

MASKWALL NOT SHOWN FOR CLARITY (TYP.)

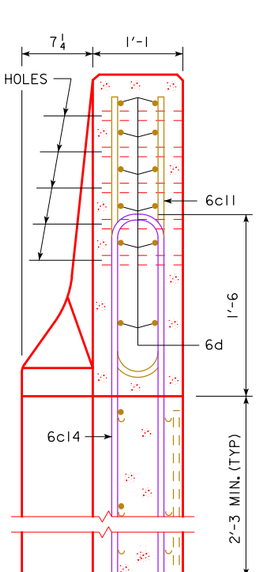

SECTION B-B

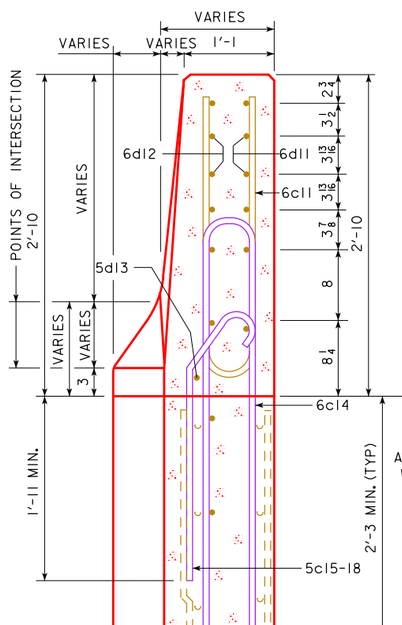

SECTION C-C

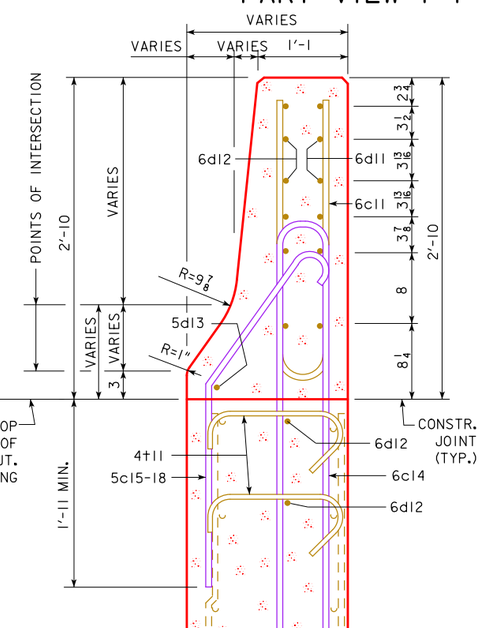

SECTION D-D

EPOXY REINFORCING STEEL - ONE END SECTION

BAR	LOCATION	SHAPE	NO.	LENGTH	WEIGHT
6c11-A	VERTICAL		7	5'-6	58
6c12-A	VERTICAL		2	2'-10	9
6d11-A	HORIZONTAL		6	6'-8	60
6d12-A	HORIZONTAL		8	6'-9	81
5d13-A	HORIZONTAL		1	3'-9	4
4+11-A	ABUTMENT WING TIE BARS		4	VARIES	5
(INCLUDE WITH BARRIER RAIL REINFORCING)		TOTAL WEIGHT (LBS.)			217

STAINLESS STEEL - ONE END SECTION

BAR	LOCATION	SHAPE	NO.	LENGTH	WEIGHT
6c13-A	VERTICAL		2	4'-1	12
6c14-A	VERTICAL		7	8'-0	84
5c15-18-A	VERTICAL		4	VARIES	15
(INCLUDE WITH BARRIER RAIL REINFORCING)		TOTAL WEIGHT (LBS.)			111

CONCRETE PLACEMENT SUMMARY

SECTION	TOTAL
BARRIER RAIL ONE END SECTION	0.65 CU. YD.

BENT BAR DETAILS

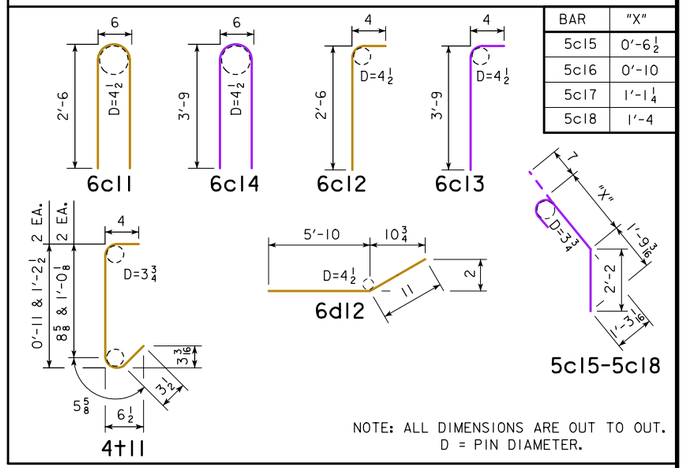

BAR	"X"
5c15	0'-6½
5c16	0'-10
5c17	1'-1¼
5c18	1'-4

NOTE: ALL DIMENSIONS ARE OUT TO OUT.
D = PIN DIAMETER.

NOTES:

4+11 PLACEMENT- 2 BARS EACH LEVEL OF 6d12 IN WING FOOTING.

CONSTRUCTION JOINT BETWEEN TOP OF WING AND BARRIER RAIL IS ROUGHENED CONCRETE.

THE 9⅞" RADIUS AND 1" RADIUS ARE TYPICAL AND SHALL BE USED WHEN CONSTRUCTING THE CORNERS FOR VIEW A-A, SECTION B-B, SECTION C-C AND SECTION D-D.

THE 6c14, 6c13, 5c15-18, 2 - 6d12 AND 4+11 BARS ARE TO BE PLACED WITH THE ABUTMENT WING. THE DETAILS FOR PLACEMENT ARE SHOWN ON DESIGN SHEET 6.

DASHED LINES BELOW THE TOP OF WING ARE THE ABUTMENT WING REINFORCING STEEL. SEE DESIGN SHEET 6 FOR PLACEMENT.

DESIGNATION "-A" SIGNIFIES BAR ASSOCIATED WITH THE RAMP A BRIDGE. "-A" NOT SHOWN IN DETAILS FOR CLARITY.

DESIGN FOR 9°41'0" SKEW (L.A.)

134'-9 x 40'-0 WELDED GIRDER BRIDGE

134'-9 SIMPLE SPAN

EAST BARRIER END SECTION

STA. 1503+40.88, BASELINE U.S. 67 RAMP A — TBD

SCOTT COUNTY

IOWA DEPARTMENT OF TRANSPORTATION - HIGHWAY DIVISION

DESIGN SHEET NO. 35 OF 42 — FILE NO. 30253 — DESIGN NO. 3808

benesch engineers · scientists · planners
Alfred Benesch & Company
205 North Michigan Avenue, Suite 2400
Chicago, Illinois 60601
312-565-0450 Job No. 10061

WEST BARRIER RAILING ELEVATION

(LOOKING EAST)
(STEEL RAIL NOT SHOWN)

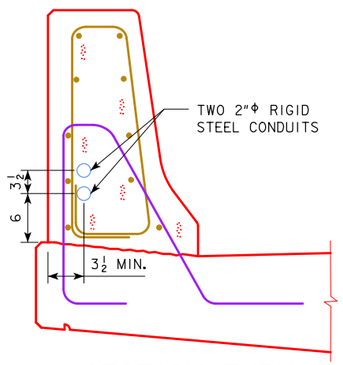

SECTION THRU BARRIER RAILING

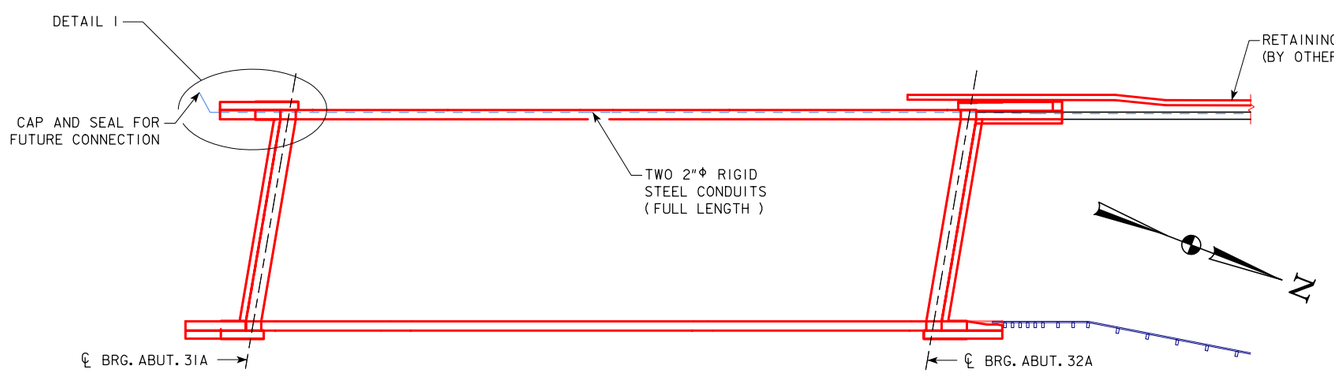

PLAN

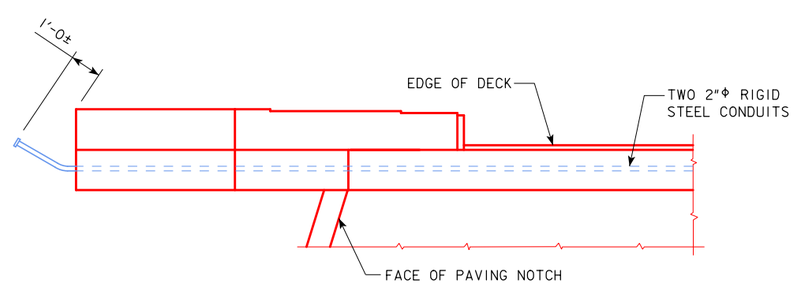

DETAIL I

NOTES:

CONDUIT INSTALLATION SHALL BE IN ACCORDANCE WITH ARTICLE 2523.03, N, OF THE STANDARD SPECIFICATIONS.

THE RIGID STEEL CONDUIT, INCLUDING ANY LABOR AND ADDITIONAL WORK NECESSARY TO DO THE INSTALLATION, IS CONSIDERED INCIDENTAL TO THE COST OF THE CONCRETE BARRIER RAILING.

THE STEEL CONDUIT SHALL BE SECURELY TIED AT EVERY 3'-0 INTERSECTION WITH THE 5c1 OR 5c3 BARS TO AVOID CONTACT WITH THE STAINLESS STEEL 5c2, 5c4 OR 5c6 BARS.

DESIGN FOR 9°41'0" SKEW (L.A.)

134'-9 x 40'-0
WELDED GIRDER BRIDGE

134'-9 SIMPLE SPAN

LIGHTING DETAILS

STA. 1503+40.88, BASELINE U.S. 67 RAMP A — TBD

SCOTT COUNTY

IOWA DEPARTMENT OF TRANSPORTATION - HIGHWAY DIVISION

DESIGN SHEET NO. 36 OF 42 FILE NO. 30253 DESIGN NO. 3808

benesch engineers · scientists · planners
Alfred Benesch & Company
205 North Michigan Avenue, Suite 2400
Chicago, Illinois 60601
312-565-0450 Job No. 10061

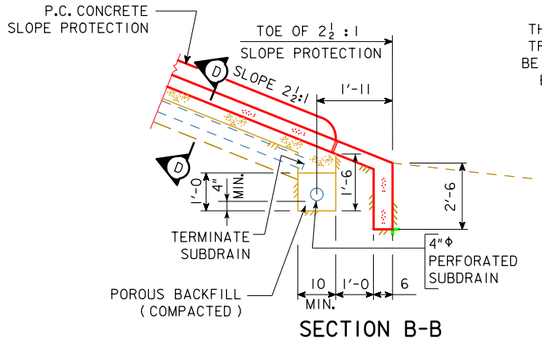

SECTION B-B

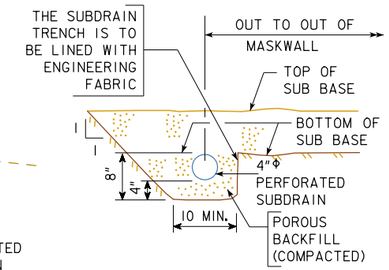

SECTION D-D (TYPICAL)

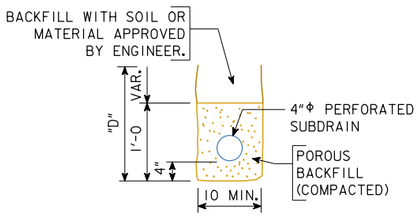

SECTION C-C (TYPICAL)

"D" = DEPTH REQUIRED TO PROVIDE PROPER FLOW LINE FOR SUBDRAIN.

ENGINEERING FABRIC ENDS ARE TO BE BURIED 6" TO PREVENT UNDERMINING.

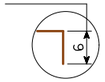

ENGINEERING FABRIC DETAIL

BENCH MARK NO. 500: STA. 6781+18.92 LT. 161.19' ELEV. 575.797, CHISELED "X" IN BOLT E. SIDE CONCRETE STRUCTURE.

SUBDRAIN NOTES:

THIS PLAN SHEET SHOWS DETAILS FOR PLACING ALL SUBDRAINS AND SUBDRAIN OUTLETS REQUIRED FOR THIS STRUCTURE.

THE SUBDRAINS SHALL BE 4" IN DIAMETER AND SHALL BE IN ACCORDANCE WITH ARTICLE 4143.01, B, OF THE STANDARD SPECIFICATIONS. THE SUBDRAIN OUTLET SHALL CONSIST OF A 6'-0 LENGTH OF PIPE WITH A REMOVABLE RODENT GUARD AS DETAILED ON THIS SHEET.

THE COST OF FURNISHING AND PLACING SUBDRAIN (INCLUDING EXCAVATION), FLOODABLE BACKFILL, POROUS BACKFILL, AND SUBDRAIN OUTLET IS TO BE INCLUDED IN THE PRICE BID FOR "HIGH PERFORMANCE STRUCTURAL CONCRETE". NO EXTRA PAYMENT WILL BE MADE.

THE DIMENSIONS SHOWN FOR THE PROPOSED SUBDRAINS ARE BASED ON THE PROPOSED GRADING LAYOUT OF BRIDGE BERMS. THE DIMENSIONS SHOWN ARE FOR ESTIMATING ONLY. REQUIRED LENGTHS AND GENERAL LOCATIONS OF SUBDRAINS ARE SUBJECT TO CHANGE DUE TO FIELD ADJUSTMENTS OF THE GRADING LAYOUT.

THE UPHILL END OF THE PERFORATED SUBDRAIN AT THE TOE OF SLOPE PROTECTION SHALL BE CAPPED AS APPROVED BY THE ENGINEER.

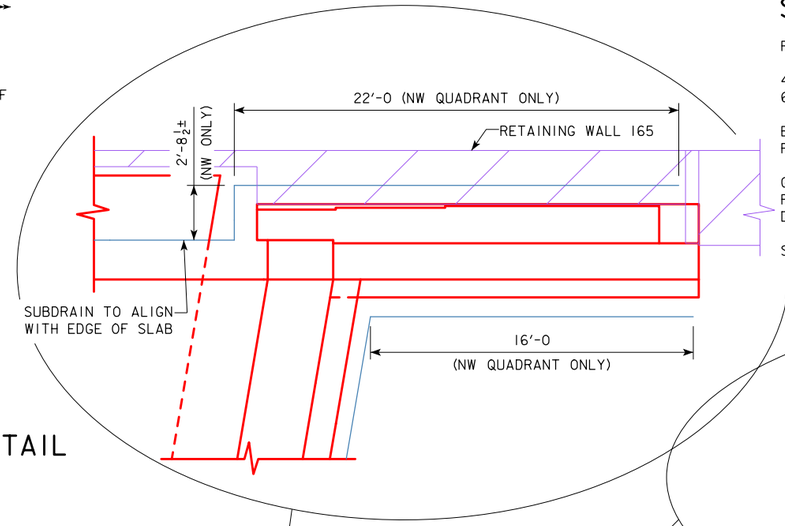

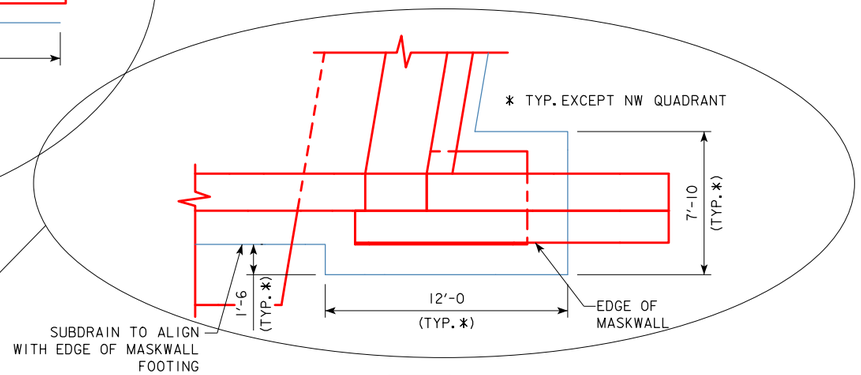

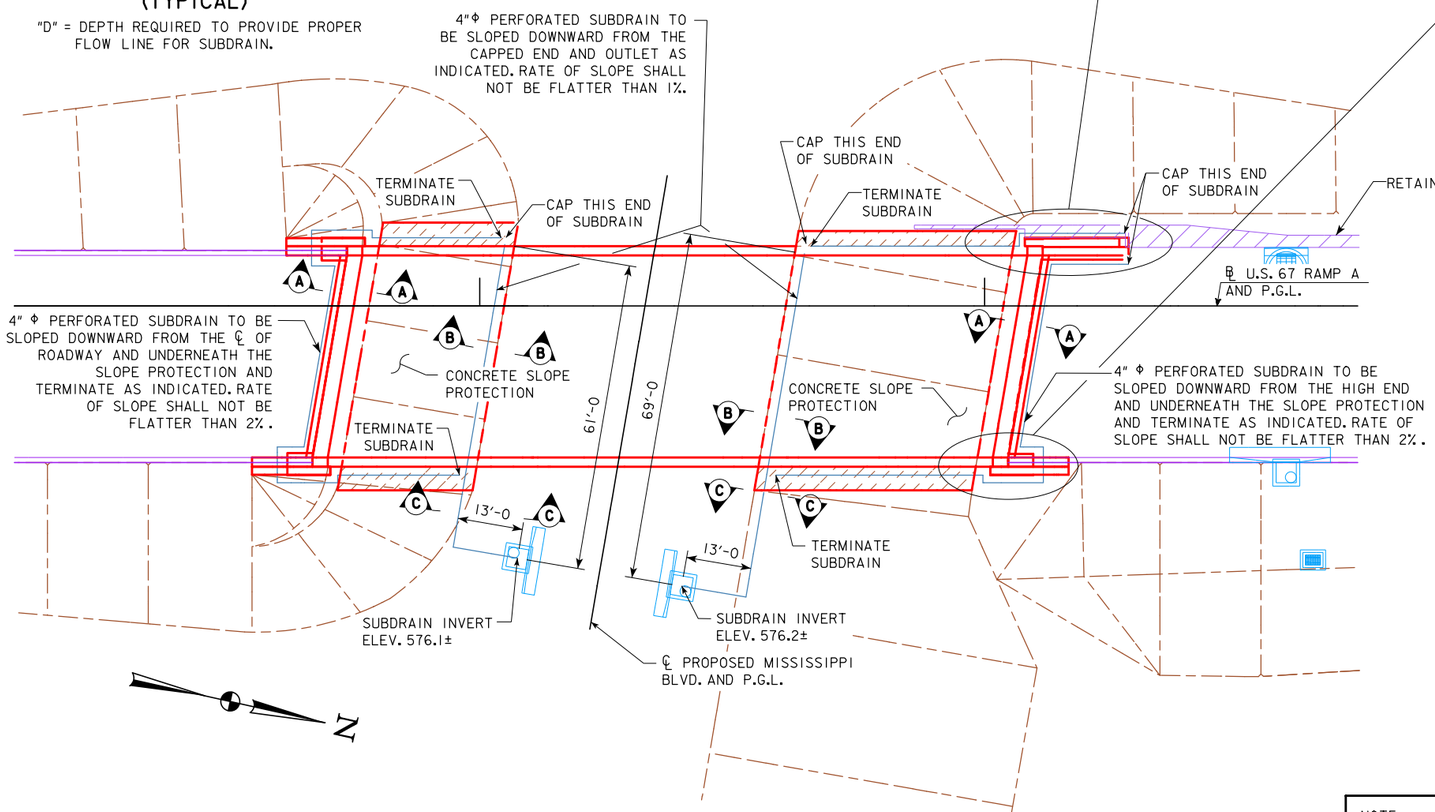

SITUATION PLAN
SHOWING SUBDRAIN LOCATIONS

6" Φ CORRUGATED METAL PIPE OUTLET, OR 4" Φ CORRUGATED DOUBLE-WALLED PE OR PVC PIPE OUTLET WITH AN APPROPRIATE COUPLER. IF METAL PIPE IS USED, THE PIPES SHOULD BE COUPLED IN ONE OF THE TWO FOLLOWING WAYS.

1. USE AN INSIDE FIT REDUCER COUPLER (COUPLER MUST BE INSERTED A MINIMUM OF 1'-0 INTO CMP.)
2. INSERT 1'-0 OF THE 4" Φ SUBDRAIN INTO THE 6" Φ METAL OUTLET PIPE, THEN FULLY SEAL THE ENTIRE OPENING WITH GROUT.

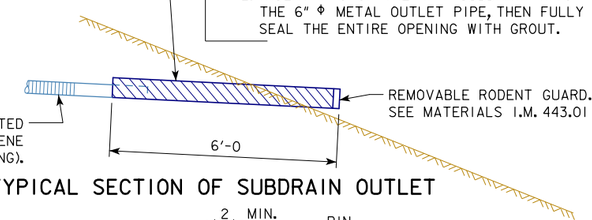

TYPICAL SECTION OF SUBDRAIN OUTLET

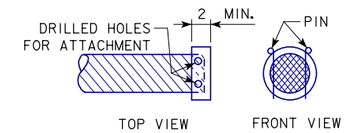

REMOVABLE RODENT GUARD DETAILS

OUTLET DETAILS

NOTE:
SECTION A-A IS SHOWN ON ABUTMENT BACKFILL DETAILS SHEET.

DESIGN FOR 9°41'0" SKEW (L.A.)

134'-9 x 40'-0
WELDED GIRDER BRIDGE

134'-9 SIMPLE SPAN

SUBDRAIN DETAILS

STA. 1503+40.88, BASELINE U.S. 67 RAMP A — TBD

SCOTT COUNTY

IOWA DEPARTMENT OF TRANSPORTATION - HIGHWAY DIVISION

DESIGN SHEET NO. 37 OF 42 FILE NO. 30253 DESIGN NO. 3808

benesch engineers · scientists · planners
Alfred Benesch & Company
205 North Michigan Avenue, Suite 2400
Chicago, Illinois 60601
312-565-0450 Job No. 10061

DESIGN TEAM DMS/MB/KWS	SUBDRAIN DETAILS (CONCRETE SLOPE PROTECTION)	STANDARD SHEET 1007 (MODIFIED)	SCOTT COUNTY	PROJECT NUMBER BRFIM-074-1(200)5--05-82	SHEET NUMBER 384

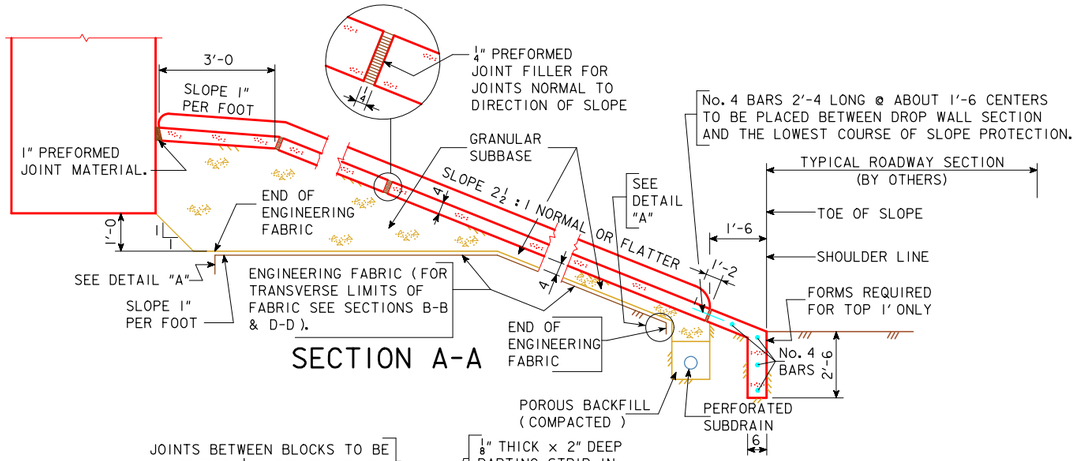

SECTION A-A

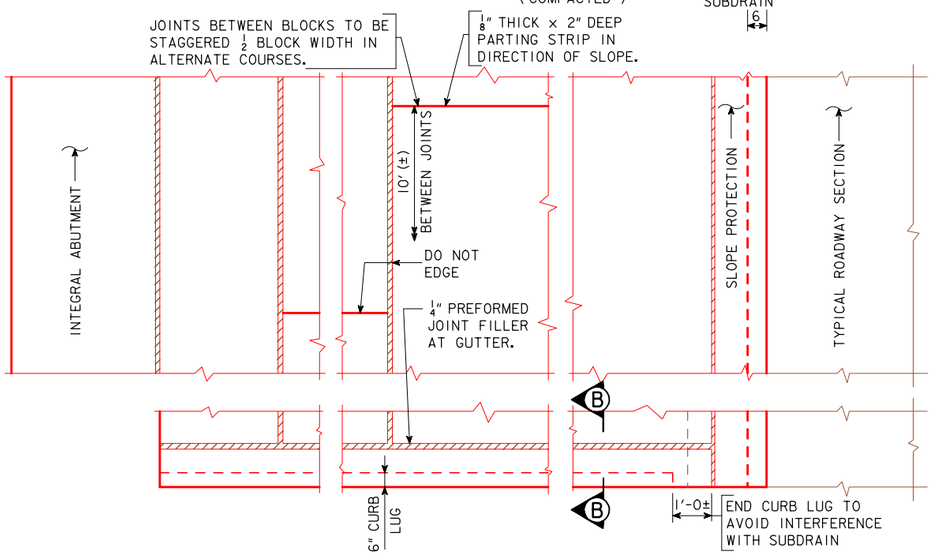

PART SLOPE PROTECTION PLAN

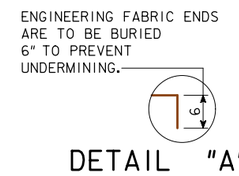

DETAIL "A"

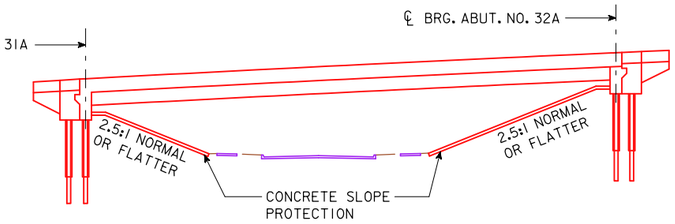

LONGITUDINAL SECTION ALONG ℄ U.S. 67 RAMP A

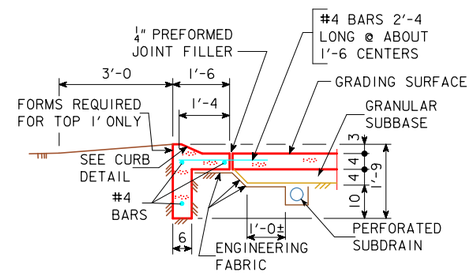

SECTION B-B
(THROUGH 4" THICK GRANULAR SUBBASE)

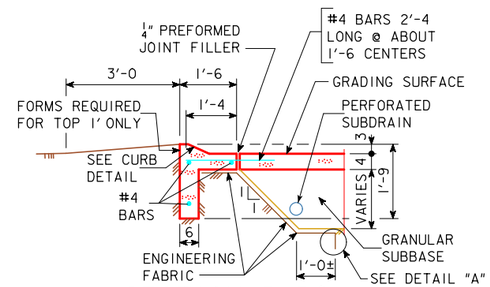

SECTION D-D*
(THROUGH VARIABLE THICKNESS GRANULAR SUBBASE)
*EXCEPT FOR NW

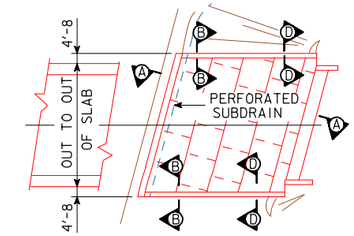

SLOPE PROTECTION LAYOUT

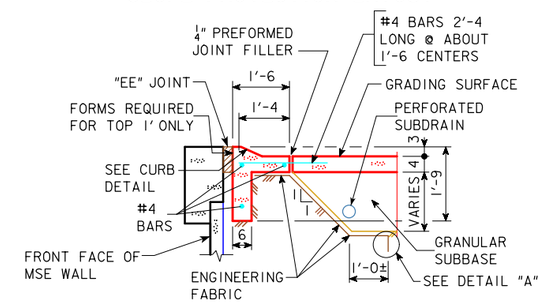

SECTION D-D NW ONLY
(THROUGH VARIABLE THICKNESS GRANULAR SUBBASE)

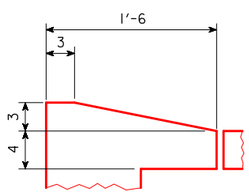

CURB DETAIL

GENERAL NOTES:

THIS PLAN SHEET SHOWS DETAILS FOR PLACING A PORTLAND CEMENT CONCRETE SLOPE PROTECTION UNDER OVERHEAD STRUCTURES.

THE CURRENT SPECIFICATIONS OF THE IOWA DEPARTMENT OF TRANSPORTATION SHALL APPLY WITH MODIFICATIONS OR ADDITIONS LISTED BELOW :

FINISH - CLASS 1, FLOATED SURFACE FINISH.

CURE - CURE AS PER CURRENT SPECIFICATIONS.

GRANULAR SUBBASE - THIS PREWETTED MATERIAL SHALL BE DEPOSITED BY A METHOD APPROVED BY THE ENGINEER AND BE THOROUGHLY TAMPED OR VIBRATED TO INSURE COMPACTION. FINISHED SHAPE SHALL BE AS SHOWN IN SECTION A-A.

FORESLOPE PREPARATION - THE BRIDGE BERM FORESLOPE SHALL BE COMPACTED AND SHAPED AS SHOWN IN SECTION A-A ON THIS SHEET. THE BERM FORESLOPE SHALL BE FIRM WHEN THE ENGINEERING FABRIC AND GRANULAR SUBBASE ARE PLACED.

ENGINEERING FABRIC SHALL BE IN ACCORDANCE WITH ARTICLE 4196.01, B, 2, OF THE STANDARD SPECIFICATIONS.

IF THE ENGINEERING FABRIC IS LAPPED, THE LAPS SHALL BE A MINIMUM OF ONE FOOT IN LENGTH, SHINGLE FASHION WITH UP SLOPE LAP PIECE ON TOP AND STAPLED FOR CONTINUITY.

THE CAST IN PLACE CONCRETE IS TO BE POURED IN APPROXIMATELY 10' WIDE COURSES, BUT ALL COURSES ON ONE SLOPE SHOULD HAVE APPROXIMATELY EQUAL WIDTHS. ADJACENT COURSES SHALL NOT BE POURED WITHIN 15 HOURS OF ONE ANOTHER. THE JOINTS IN THE DIRECTION OF THE SLOPE ARE TO BE STAGGERED ABOUT 1/2 BLOCK WIDTH.

PAYMENT FOR "CONCRETE SLOPE PROTECTION" WILL BE MADE ON A SQUARE YARD BASIS FOR SLOPE PROTECTION CONSTRUCTED. THE UNIT PRICE BID PER SQUARE YARD IS TO INCLUDE COSTS OF ALL MATERIALS AND LABOR REQUIRED TO CONSTRUCT THE SLOPE PROTECTION AS SHOWN ON THESE PLANS. THE DISPOSAL OF EXCESS SOIL FROM SHAPING OR TRENCHING, AS DIRECTED BY THE ENGINEER, SHALL BE CONSIDERED INCIDENTAL TO PLACING THE CONCRETE SLOPE PROTECTION.

WHERE EROSION CONTROL WORK IS COMPLETED THE CONTRACTOR SHALL BE RESPONSIBLE FOR ANY PLANT MATERIALS DESTROYED ADJACENT TO SLOPE PROTECTION AREA. THE CONTRACTOR SHALL REPLANT, RESEED AND REMULCH ALL AREAS IN ACCORDANCE WITH SECTION 2601, OF THE STANDARD SPECIFICATIONS, AT HIS EXPENSE.

THE BRIDGE CONTRACTOR IS TO INSTALL SUBDRAINS AS DETAILED ON DESIGN SHEET 37.

ESTIMATED QUANTITIES

DESCRIPTION	LOCATION	QUANTITY
CONCRETE SLOPE PROTECTION	ABUT. NO. 31A	188 SQ.YDS.
CONCRETE SLOPE PROTECTION	ABUT. NO. 32A	291 SQ.YDS.
	TOTAL	479 SQ.YDS.

ITEMS TO BE INCLUDED IN "CONCRETE SLOPE PROTECTION":
ENGINEERING FABRIC
GRANULAR SUBBASE
CLASS "C" STRUCTURAL CONCRETE
#4 REINFORCING
PREFORMED JOINT FILLER
EXCAVATION, SHAPING AND COMPACTING

DESIGN FOR 9°41'0" SKEW (L.A.)

134'-9 x 40'-0
WELDED GIRDER BRIDGE

134'-9 SIMPLE SPAN

SLOPE PROTECTION DETAILS

STA. 1503+40.88, BASELINE U.S. 67 RAMP A TBD

SCOTT COUNTY

IOWA DEPARTMENT OF TRANSPORTATION - HIGHWAY DIVISION

DESIGN SHEET NO. 38 OF 42 FILE NO. 30253 DESIGN NO. 3808

benesch engineers · scientists · planners
Alfred Benesch & Company
205 North Michigan Avenue, Suite 2400
Chicago, Illinois 60601
312-565-0450 Job No. 10061

10:31:40 AM untitled c:\pwise_work\do_not_delete\dms05641\82074200.brg
MODEL: $MODEL

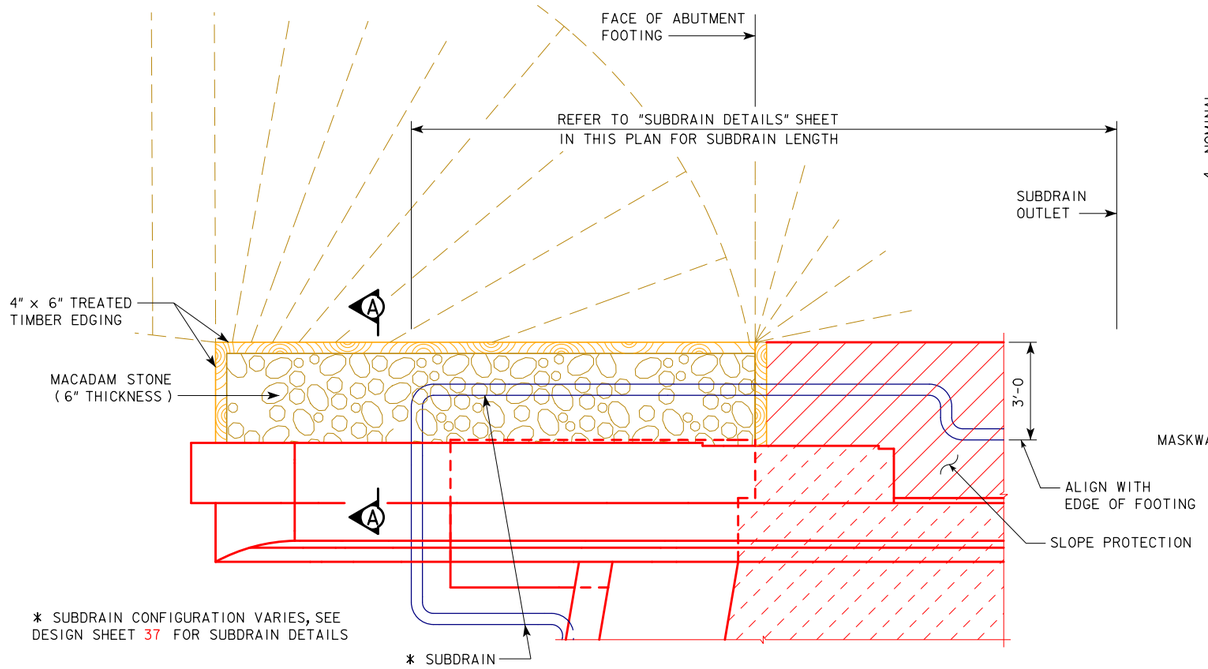

TOP VIEW OF WING ARMORING WITH WING EXTENSION

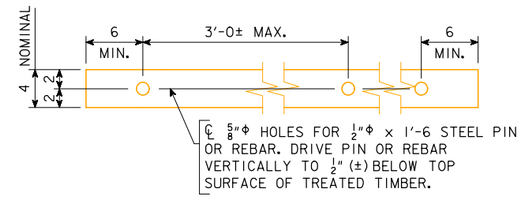

4" x 6" TREATED TIMBER EDGING DETAILS

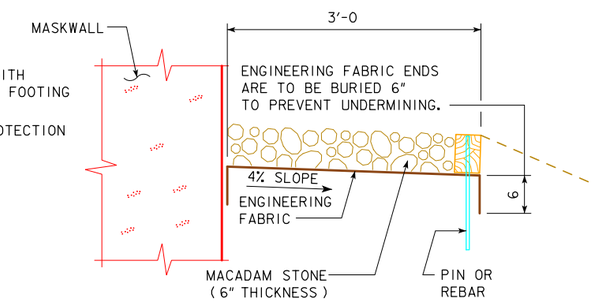

SECTION A-A

GENERAL NOTES:

MACADAM STONE SHALL BE PLACED ALONG THE SIDE OF THE MASKWALL FOOTING AS SHOWN IN SECTION A-A. THIS IS TYPICAL AT EACH CORNER OF THE ABUTMENT UNLESS OTHERWISE NOTED IN THE PLANS. THE MACADAM STONE AT THESE LOCATIONS SHALL BE UNDERLAYED WITH ENGINEERING FABRIC IN ACCORDANCE WITH ARTICLE 4196.01, B, 3, OF THE STANDARD SPECIFICATIONS.

THE MACADAM STONE SHALL BE IN ACCORDANCE WITH SECTION 4122, OF THE STANDARD SPECIFICATIONS, COARSE MATERIAL (NO CHOKE STONE IS ALLOWED).

WOOD PRESERVATIVE TREATMENT FOR THE TIMBER EDGING SHALL MEET THE REQUIREMENTS FOR GUARDRAIL POSTS, SAWED FOUR SIDES, IN ACCORDANCE WITH SECTION 4161, OF THE STANDARD SPECIFICATIONS.

THE MACADAM STONE SHALL BE DEPOSITED, SPREAD, CONSOLIDATED AND SHAPED BY MECHANICAL OR HAND METHODS THAT WILL PROVIDE UNIFORM 6" DEPTH AND DENSITY AND PROVIDE UNIFORM SURFACE APPEARANCE.

PAYMENT FOR THE BRIDGE WING ARMORING WILL BE BID PER SQUARE YARD. COST WILL INCLUDE ENGINEERING FABRIC, MACADAM STONE, TREATED TIMBER EDGING, EXCAVATION, SHAPING, AND COMPACTION TO DIMENSIONS SHOWN IN THESE PLANS. BID ITEM SHALL BE "BRIDGE WING ARMORING - MACADAM STONE".

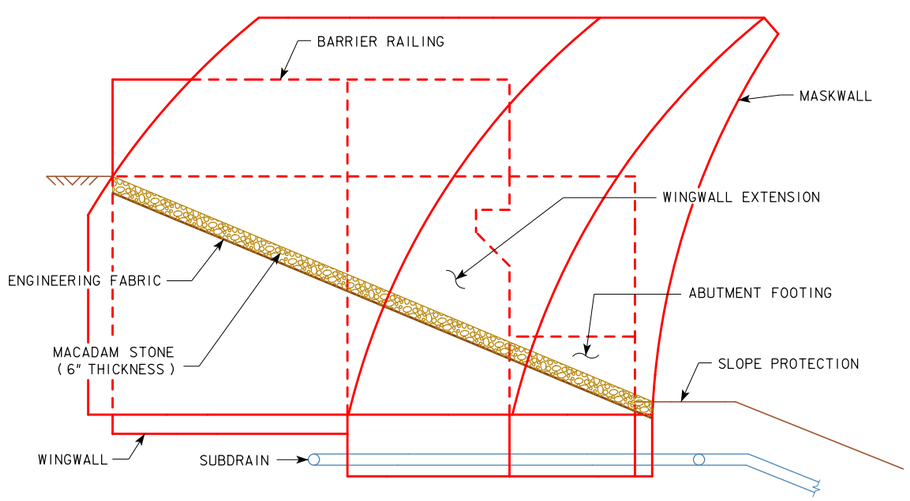

PROFILE VIEW OF WING ARMORING WITH MASKWALL

SE QUADRANT SHOWN
SW AND NE QUADRANTS OPPOSITE HAND
(SUPERSTRUCTURE NOT SHOWN)

ESTIMATED QUANTITIES

DESCRIPTION	LOCATION	QUANTITY
BRIDGE WING ARMORING-MACADAM STONE	ABUT. NO. 31A	11 SQ.YDS.
BRIDGE WING ARMORING-MACADAM STONE	ABUT. NO. 32A	6 SQ.YDS.
	TOTAL	17 SQ.YDS.

ITEMS TO BE INCLUDED IN "BRIDGE WING ARMORING-MACADAM STONE":
- ENGINEERING FABRIC
- MACADAM STONE
- TREATED TIMBER EDGING
- EXCAVATION, SHAPING AND COMPACTING

DESIGN FOR 9°41'0" SKEW (L.A.)

134'-9 x 40'-0
WELDED GIRDER BRIDGE
134'-9 SIMPLE SPAN

WING ARMORING DETAILS

STA. 1503+40.88, BASELINE U.S. 67 RAMP A — TBD

SCOTT COUNTY

IOWA DEPARTMENT OF TRANSPORTATION - HIGHWAY DIVISION

DESIGN SHEET NO. 39 OF 42 FILE NO. 30253 DESIGN NO. 3808

benesch engineers · scientists · planners
Alfred Benesch & Company
205 North Michigan Avenue, Suite 2400
Chicago, Illinois 60601
312-565-0450 Job No. 10061

NOTE:

SUBDRAIN SHALL SLOPE DOWNWARD 2% FROM MIDPOINT OF ABUTMENT WHEN OUTLETTING BOTH SIDES OF THE ABUTMENT.

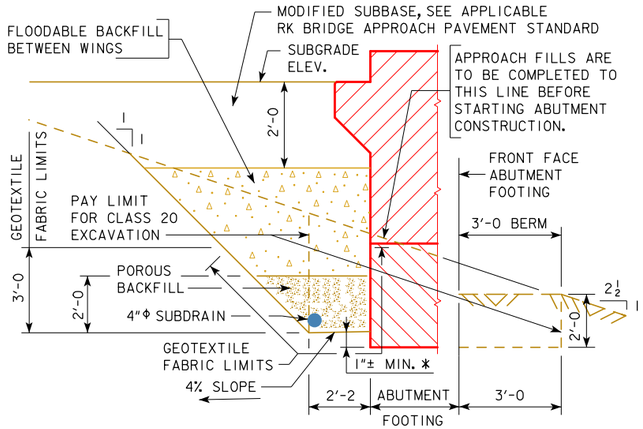

SECTION A-A

FLOODABLE BACKFILL DETAILS

NOTE: GEOTEXTILE FABRIC WILL BE ATTACHED TO FACE OF ABUTMENT FOOTING AND WINGS.

* DIMENSION VARIES DUE TO 2% SUBDRAIN SLOPE.

NOTE:
SEE SUBDRAIN DETAILS SHEET FOR DETAILS NOT SHOWN ON THIS SHEET WHICH ARE PERTINENT TO THIS STRUCTURE.

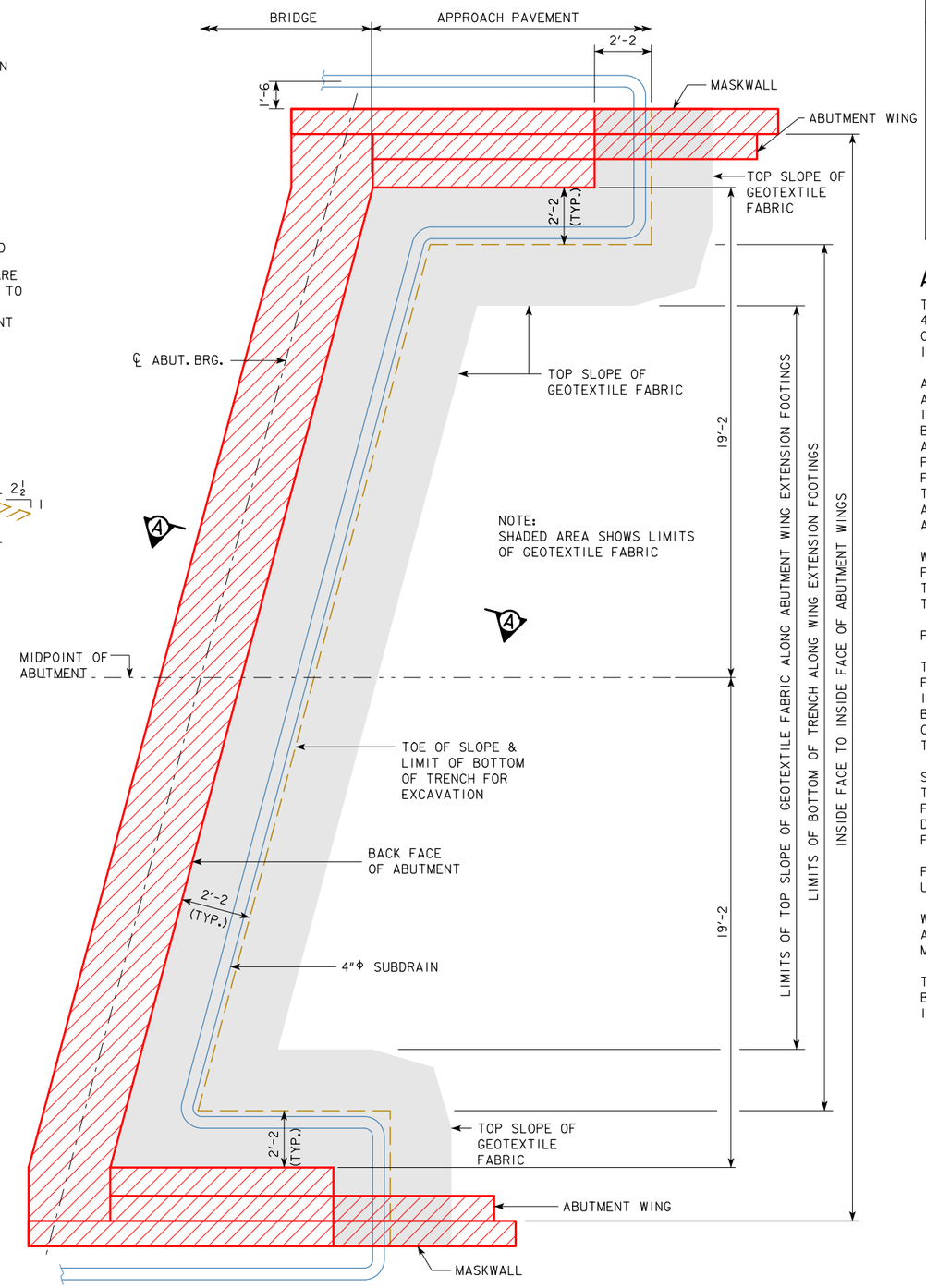

ABUTMENT 31A PLAN WITH WING EXTENSIONS

TECHNICAL DATA INFORMATION - GEOTEXTILE FABRIC

MECHANICAL PROPERTIES	TEST METHOD	UNIT	MINIMUM AVERAGE ROLL VALUE	
			MD	CD
TENSILE STRENGTH (AT 5% STRAIN)	ASTM D 4595	kN/m (LBS/FT)	19.8 (1356)	19.8 (1356)
APPARENT OPENING SIZE (AOS)	ASTM D 4751	mm (U.S. SIEVE)	0.43 MAX (#40)	
FLOW RATE	ASTM D 4491	L/MIN/m² (GAL/MIN/FT²)	733 (18)	
UV RESISTANCE (AT 500 HOURS)	ASTM D 4355	% STRENGTH RETAINED	70	

ABUTMENT 31A BACKFILL PROCESS:

THE BASE OF THE EXCAVATION SUBGRADE BEHIND THE ABUTMENT IS TO BE GRADED WITH A 4% SLOPE AWAY FROM THE ABUTMENT FOOTING AND A 2% CROSS SLOPE IN THE DIRECTION OF THE SUBDRAIN OUTLET. THIS EXCAVATION SHAPING IS TO BE DONE PRIOR TO BEGINNING INSTALLATION OF THE GEOTEXTILE AND BACKFILL MATERIAL.

AFTER THE SUBGRADE HAS BEEN SHAPED, THE GEOTEXTILE FABRIC SHALL BE INSTALLED IN ACCORDANCE WITH THE DETAILS SHOWN. THE FABRIC IS INTENDED TO BE INSTALLED IN THE BASE OF THE EXCAVATION AND EXTENDED VERTICALLY UP THE ABUTMENT BACKWALL, ABUTMENT WING WALLS, AND EXCAVATION FACE TO A HEIGHT THAT WILL BE APPROXIMATELY 1 TO 2 FOOT HIGHER THAN THE HEIGHT OF THE POROUS BACKFILL PLACEMENT AS SHOWN IN THE "BACKFILL DETAILS" ON THIS SHEET. THE STRIPS OF THE FABRIC PLACED SHALL OVERLAP APPROXIMATELY 1 FOOT AND SHALL BE PINNED IN PLACE. THE FABRIC SHALL BE ATTACHED TO THE ABUTMENT BY USING LATH FOLDED IN THE FABRIC AND SECURED TO THE CONCRETE WITH SHALLOW CONCRETE NAILS. THE FABRIC PLACED AGAINST THE EXCAVATION FACE SHALL BE PINNED.

WHEN THE FABRIC IS IN PLACE, THE SUBDRAIN SHALL BE INSTALLED DIRECTLY ON THE FABRIC AT THE TOE OF THE REAR EXCAVATION SLOPE. A SLOT WILL NEED TO BE CUT IN THE FABRIC AT THE POINT WHERE THE SUBDRAIN EXITS THE FABRIC NEAR THE END OF THE ABUTMENT WING WALL.

POROUS BACKFILL IS THEN PLACED AND LEVELED, NO COMPACTION IS REQUIRED.

THE REMAINING WORK INVOLVES BACKFILLING WITH FLOODABLE BACKFILL, SURFACE FLOODING, AND VIBRATORY COMPACTION. THE FLOODABLE BACKFILL MATERIAL SHALL BE IN ACCORDANCE WITH THE STANDARD SPECIFICATIONS. THE FLOODABLE BACKFILL SHALL BE PLACED IN INDIVIDUAL LIFTS, SURFACE FLOODED, AND COMPACTED WITH VIBRATORY COMPACTION TO ENSURE FULL CONSOLIDATION. LIMIT THE LOOSE LIFTS TO NO MORE THAN 2 FEET OF THICKNESS.

START SURFACE FLOODING FOR EACH FLOODABLE BACKFILL LIFT AT THE HIGH POINT OF THE SUBDRAIN AND PROGRESS TO THE LOW POINT WHERE THE SUBDRAIN EXITS THE FABRIC. TO ENSURE UNIFORM SURFACE FLOODING, WATER RUNNING FULL IN A 2-INCH DIAMETER HOSE SHOULD BE SPRAYED IN SUCCESSIVE 6-FOOT TO 8-FOOT INCREMENTS FOR 3 MINUTES WITHIN EACH INCREMENT.

FLOODABLE BACKFILL LIFT PLACEMENT, FLOODING, AND COMPACTION SHALL PROGRESS UNTIL THE REQUIRED FULL THICKNESS OF THE ABUTMENT BACKFILL HAS BEEN COMPLETED.

WATER REQUIRED FOR FLOODING, SUBDRAINS, POROUS BACKFILL, FLOODABLE BACKFILL, AND GEOTEXTILE FABRIC FURNISHED AT THE BRIDGE ABUTMENTS WILL NOT BE MEASURED SEPARATELY FOR PAYMENT.

THE COST OF WATER REQUIRED FOR FLOODING, SUBDRAINS, POROUS BACKFILL, FLOODABLE BACKFILL, AND GEOTEXTILE FABRIC FURNISHED AT THE BRIDGE ABUTMENTS SHALL BE INCLUDED IN THE CONTRACT UNIT PRICE BID FOR HIGH PERFORMANCE STRUCTURAL CONCRETE.

benesch engineers · scientists · planners
Alfred Benesch & Company
205 North Michigan Avenue, Suite 2400
Chicago, Illinois 60601
312-565-0450 Job No. 10061

DESIGN FOR 9°41'0" SKEW (L.A.)

134'-9 x 40'-0
WELDED GIRDER BRIDGE

134'-9 SIMPLE SPAN

ABUTMENT 31A BACKFILL DETAILS

STA. 1503+40.88, BASELINE U.S. 67 RAMP A TBD

SCOTT COUNTY

IOWA DEPARTMENT OF TRANSPORTATION - HIGHWAY DIVISION

DESIGN SHEET NO. 40 OF 42 FILE NO. 30253 DESIGN NO. 3808

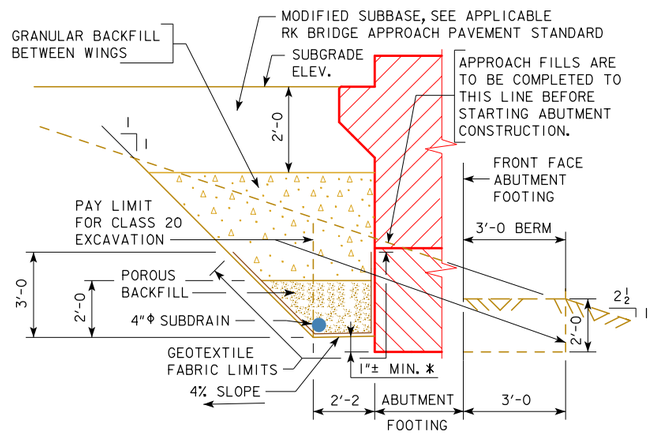

SECTION A-A

GRANULAR BACKFILL DETAILS

NOTE: GEOTEXTILE FABRIC WILL BE ATTACHED TO FACE OF ABUTMENT FOOTING AND WINGS.

* DIMENSION VARIES DUE TO 2% SUBDRAIN SLOPE.

NOTE:

SUBDRAIN SHALL SLOPE DOWNWARD 2% FROM NORTH END OF WEST WINGWALL FOOTING OF ABUTMENT.

NOTE:
SEE SUBDRAIN DETAILS SHEET FOR DETAILS NOT SHOWN ON THIS SHEET WHICH ARE PERTINENT TO THIS STRUCTURE.

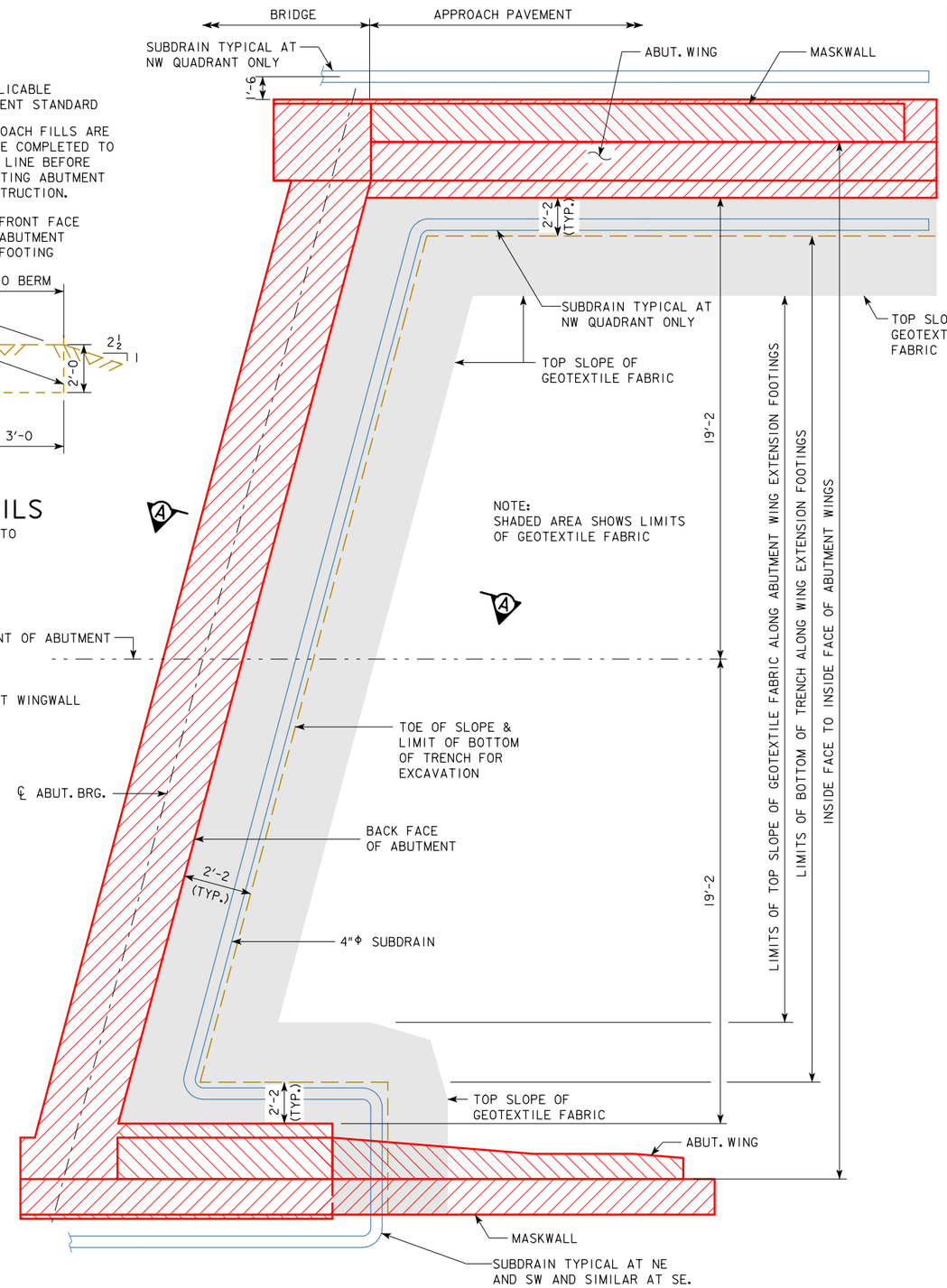

ABUTMENT 32A PLAN WITH WING EXTENSIONS

TECHNICAL DATA INFORMATION - GEOTEXTILE FABRIC

MECHANICAL PROPERTIES	TEST METHOD	UNIT	MINIMUM AVERAGE ROLL VALUE	
			MD	CD
TENSILE STRENGTH (AT 5% STRAIN)	ASTM D 4595	kN/m (LBS/FT)	19.8 (1356)	19.8 (1356)
APPARENT OPENING SIZE (AOS)	ASTM D 4751	mm (U.S. SIEVE)	0.43 MAX (#40)	
FLOW RATE	ASTM D 4491	L/MIN/m² (GAL/MIN/FT²)	733 (18)	
UV RESISTANCE (AT 500 HOURS)	ASTM D 4355	% STRENGTH RETAINED	70	

ABUTMENT 32A BACKFILL PROCESS:

THE BASE OF THE EXCAVATION SUBGRADE BEHIND THE ABUTMENT IS TO BE GRADED WITH A 4% SLOPE AWAY FROM THE ABUTMENT FOOTING AND A 2% CROSS SLOPE IN THE DIRECTION OF THE SUBDRAIN OUTLET. THIS EXCAVATION SHAPING IS TO BE DONE PRIOR TO BEGINNING INSTALLATION OF THE GEOTEXTILE AND BACKFILL MATERIAL.

AFTER THE SUBGRADE HAS BEEN SHAPED, THE GEOTEXTILE FABRIC SHALL BE INSTALLED IN ACCORDANCE WITH THE DETAILS SHOWN. THE FABRIC IS INTENDED TO BE INSTALLED IN THE BASE OF THE EXCAVATION AND EXTENDED VERTICALLY UP THE ABUTMENT BACKWALL, ABUTMENT WING WALLS, AND EXCAVATION FACE TO A HEIGHT THAT WILL BE APPROXIMATELY 1 TO 2 FOOT HIGHER THAN THE HEIGHT OF THE POROUS BACKFILL PLACEMENT AS SHOWN IN THE "BACKFILL DETAILS" ON THIS SHEET. THE STRIPS OF THE FABRIC PLACED SHALL OVERLAP APPROXIMATELY 1 FOOT AND SHALL BE PINNED IN PLACE. THE FABRIC SHALL BE ATTACHED TO THE ABUTMENT BY USING LATH FOLDED IN THE FABRIC AND SECURED TO THE CONCRETE WITH SHALLOW CONCRETE NAILS. THE FABRIC PLACED AGAINST THE EXCAVATION FACE SHALL BE PINNED.

WHEN THE FABRIC IS IN PLACE, THE SUBDRAIN SHALL BE INSTALLED DIRECTLY ON THE FABRIC AT THE TOE OF THE REAR EXCAVATION SLOPE. A SLOT WILL NEED TO BE CUT IN THE FABRIC AT THE POINT WHERE THE SUBDRAIN EXITS THE FABRIC NEAR THE END OF THE ABUTMENT WING WALL.

POROUS BACKFILL IS THEN PLACED AND LEVELED, NO COMPACTION IS REQUIRED.

THE REMAINING WORK INVOLVES BACKFILLING WITH GRANULAR BACKFILL AND VIBRATORY COMPACTION. THE GRANULAR BACKFILL MATERIAL SHALL BE IN ACCORDANCE WITH SECTION 4133 OF THE STANDARD SPECIFICATIONS. THE GRANULAR BACKFILL SHALL BE PLACED AND COMPACTED N ACCORDANCE WITH SECTION 2432.03, H OF THE STANDARD SPECIFICATIONS.

PLACEMENT OF ABUTMENT BACKFILL BY FLOODING SHALL BE PROHIBITED.

GRANULAR BACKFILL LIFT PLACEMENT AND COMPACTION SHALL PROGRESS UNTIL THE REQUIRED FULL THICKNESS OF THE ABUTMENT BACKFILL HAS BEEN COMPLETED.

SUBDRAINS, POROUS BACKFILL, GRANULAR BACKFILL, AND GEOTEXTILE FABRIC FURNISHED AT THE BRIDGE ABUTMENTS WILL NOT BE MEASURED SEPARATELY FOR PAYMENT.

THE COST OF SUBDRAINS, POROUS BACKFILL, GRANULAR BACKFILL, AND GEOTEXTILE FABRIC FURNISHED AT THE BRIDGE ABUTMENTS SHALL BE INCLUDED IN THE CONTRACT UNIT PRICE BID FOR HIGH PERFORMANCE STRUCTURAL CONCRETE.

benesch
engineers · scientists · planners
Alfred Benesch & Company
205 North Michigan Avenue, Suite 2400
Chicago, Illinois 60601
312-565-0450 Job No. 10061

DESIGN FOR 9°41'0" SKEW (L.A.)

134'-9 x 40'-0
WELDED GIRDER BRIDGE
134'-9 SIMPLE SPAN

ABUTMENT 32A BACKFILL DETAILS

STA. 1503+40.88, BASELINE U.S. 67 RAMP A TBD

SCOTT COUNTY

IOWA DEPARTMENT OF TRANSPORTATION - HIGHWAY DIVISION

DESIGN SHEET NO. 41 OF 42 FILE NO. 30253 DESIGN NO. 3808

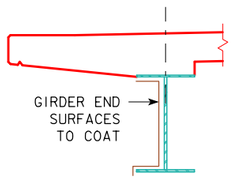

SECTION A-A

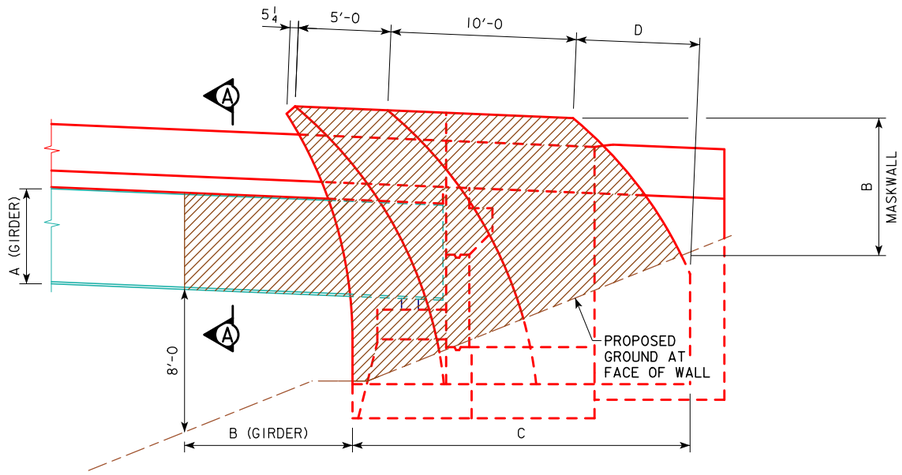

MASKWALL, WINGWALL, AND
CONCRETE BARRIER ELEVATION

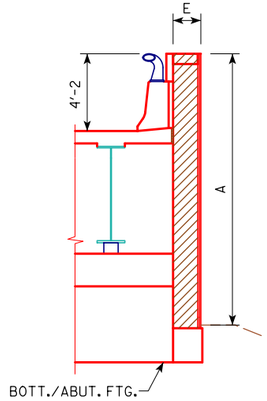

MASKWALL
END VIEW

ANTI-GRAFFITI COATING SCHEDULE

SURFACE TYPE	LOCATION	DIMENSIONS *					REFERENCE DESIGN SHEET NUMBERS	QUANTITY
		A	B	C	D	E		SY
MASKWALL	RAMP A SE	11'-1½	3'-11⅝	16'-5	4'-7⅜	1'-5	9, 10	16
	RAMP A SW	10'-8¼	3'-7⅜	16'-2½	4'-4⅜	1'-5	11, 12	15
	RAMP A NE	10'-7¼	4'-5¾	17'-9¾	5'-3⅝	1'-5	13, 14	18
GIRDER ENDS	RAMP A SE	3'-1½	14'-10⅞				3, 21	9
	RAMP A SW	3'-1½	15'-9½				3, 21	9
	RAMP A NE	3'-1½	19'-6				3, 21	12
							TOTAL (SQ. YD.)	79

* DIMENSIONS ARE APPROXIMATE. PLAN QUANTITIES ARE CALCULATED GRAPHICALLY IN CADD.

ANTI-GRAFFITI COATING

NOTE:

ANTI-GRAFFITI SURFACE PREPARATION AND APPLICATION SHALL BE IN ACCORDANCE WITH THE "SPECIAL PROVISIONS FOR ANTI-GRAFFITI COATING". THE MATERIAL USED SHALL BE AN APPROVED TYPE IN ACCORDANCE WITH MATERIALS I.M. 491.23. ANTI-GRAFFITI COATING SHALL BE APPLIED TO SURFACES LISTED IN THE SCHEDULE AND TO THE LIMITS INDICATED IN THESE PLANS.

DESIGN FOR 9°41'0" SKEW (L.A.)

134'-9 x 40'-0
WELDED GIRDER BRIDGE

134'-9 SIMPLE SPAN

ANTI-GRAFFITI COATING

STA. 1503+40.88, BASELINE U.S. 67 RAMP A TBD

SCOTT COUNTY

IOWA DEPARTMENT OF TRANSPORTATION - HIGHWAY DIVISION

DESIGN SHEET NO. 42 OF 42 FILE NO. 30253 DESIGN NO. 3808

benesch
engineers · scientists · planners
Alfred Benesch & Company
205 North Michigan Avenue, Suite 2400
Chicago, Illinois 60601
312-565-0450 Job No. 10061

DESIGN FOR 9°41'0" SKEW (L.A.)

134'-9" X 40'-0
WELDED GIRDER BRIDGE

134'-9" SIMPLE SPAN

SOIL PROFILE SHEET

STA. 1503+40.88, BASELINE U.S. 67 RAMP A — T.B.D.

SCOTT COUNTY

IOWA DEPARTMENT OF TRANSPORTATION - HIGHWAY DIVISION

DESIGN SHEET NO. 1 OF 1 FILE NO. 30253 DESIGN NO. 3808

GEOTECHNICAL DESIGN

LICENSED PROFESSIONAL ENGINEER — Kipkoech K. Chepkoit 18405 — IOWA

I hereby certify that this engineering document was prepared by me or under my direct personal supervision and that I am a duly licensed Professional Engineer under the laws of the State of Iowa.

Signature — Date

Kipkoech K. Chepkoit

Printed or Typed Name

My license renewal date is December 31, 2014

Pages or sheets covered by this seal: SPS. 8

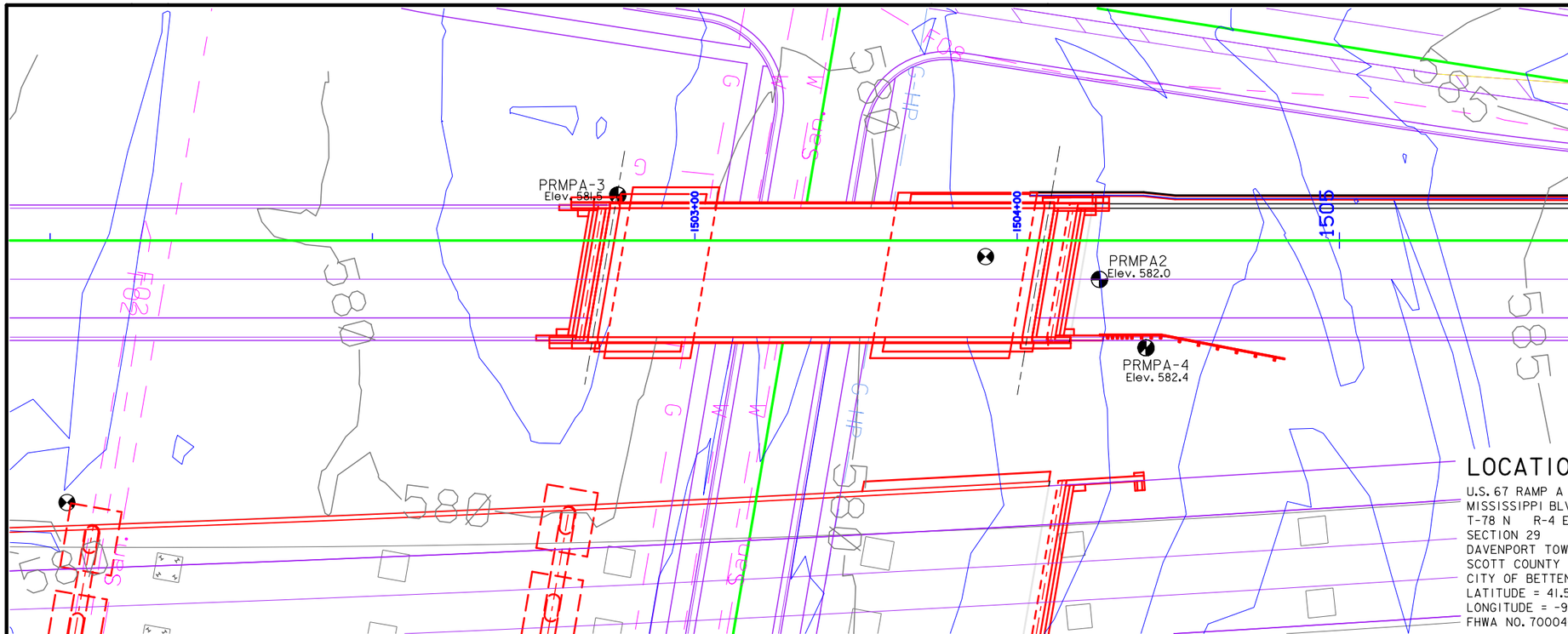

LOCATION

U.S. 67 RAMP A OVER
MISSISSIPPI BLVD.
T-78 N R-4 E
SECTION 29
DAVENPORT TOWNSHIP
SCOTT COUNTY
CITY OF BETTENDORF
LATITUDE = 41.528195
LONGITUDE = -90.514479
FHWA NO. 700040

N

THIS SHEET IS INCLUDED TO SHOW SOIL BORING INFORMATION ONLY. DETAILS AND NOTES SHOWN ELSEWHERE IN THESE PLANS SHALL BE USED FOR CONSTRUCTION.

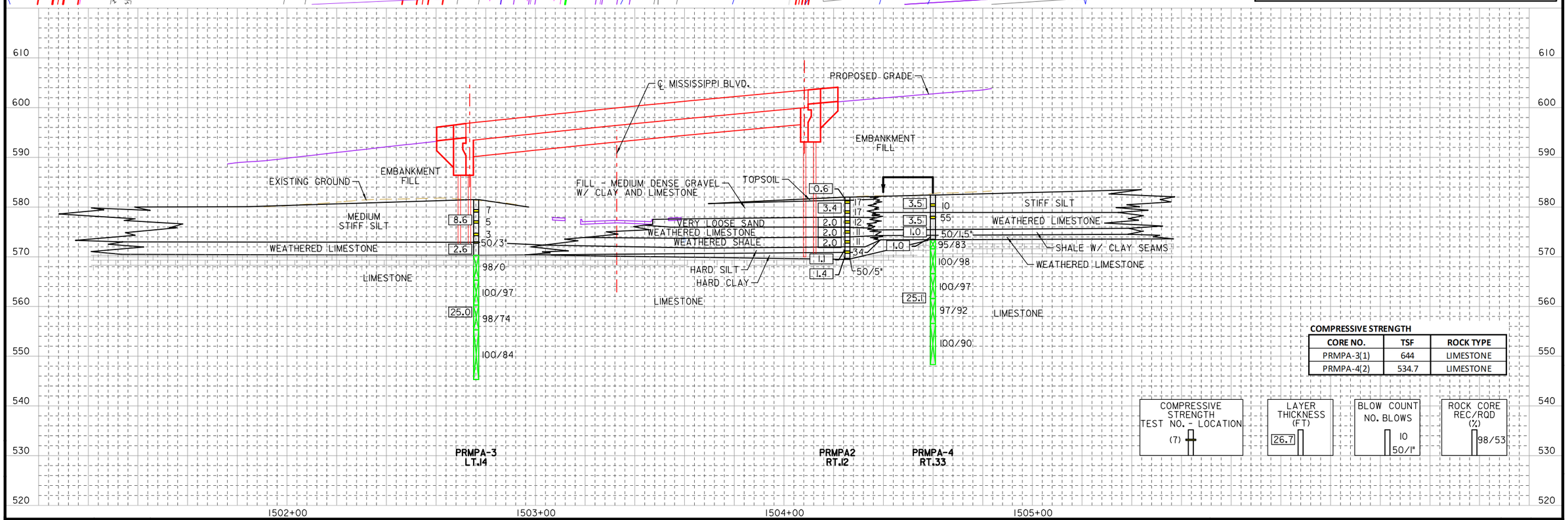

COMPRESSIVE STRENGTH

CORE NO.	TSF	ROCK TYPE
PRMPA-3(1)	644	LIMESTONE
PRMPA-4(2)	534.7	LIMESTONE

ESTIMATED BRIDGE QUANTITIES

ITEM NO.	ITEM CODE	ITEM	UNIT	TOTAL
1	2599-9999010	PIER MOCKUP	LS	1

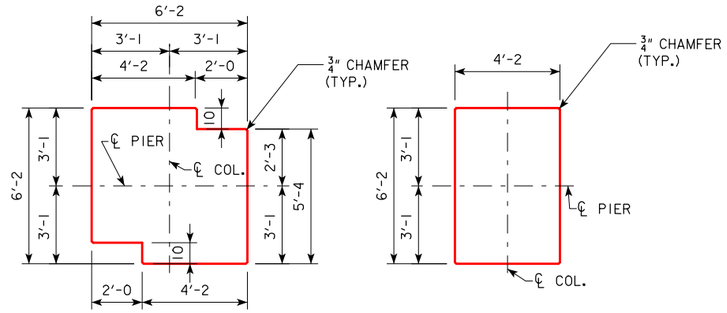

SECTION A-A

SECTION B-B

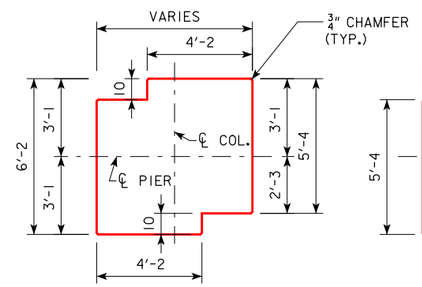

SECTION C-C

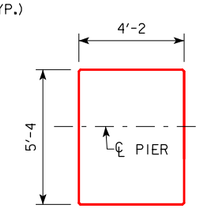

SECTION D-D

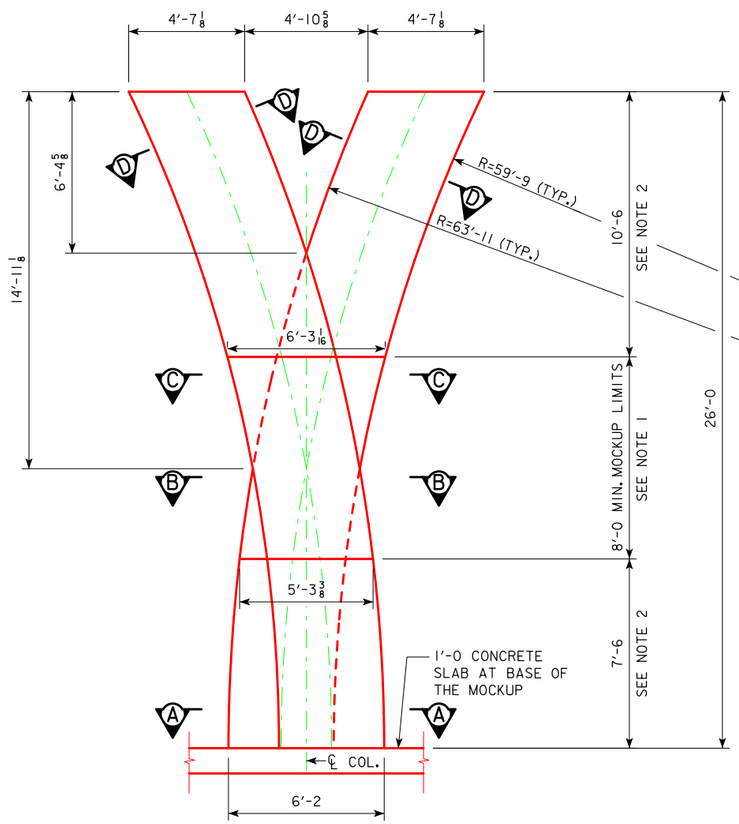

PIER MOCKUP ELEVATION

SPECIFICATIONS:

DESIGN: AASHTO LRFD 5th Ed, SERIES OF 2010, EXCEPTAS NOTED IN THE CURRENT IOWA BRIDGE DESIGN MANUAL.

CONSTRUCTION: IOWA DEPARTMENT OF TRANSPORTATION STANDARD SPECIFICATIONS FOR HIGHWAY AND BRIDGE CONSTRUCTION, SERIES 2012, PLUS APPLICABLE GENERAL SUPPLEMENTAL SPECIFICATIONS, DEVELOPMENTAL SPECIFICATIONS, SUPPLEMENTAL SPECIFICATIONS AND SPECIAL PROVISIONS SHALL APPLY TO CONSTRUCTION WORK ON THIS PROJECT.

THE DEVELOPMENTAL SPECIFICATIONS, DS-12019, FOR MASS CONCRETE-CONTROL OF HEAT OF HYDRATION SHALL APPLY TO WORK ON THIS PROJECT.

THE SPECIAL PROVISIONS FOR HIGH PERFORMANCE SELF CONSOLIDATING CONCRETE (HP-SCC) SHALL APPLY TO WORK ON THIS PROJECT.

DESIGN STRESSES:

DESIGN STRESSES FOR THE FOLLOWING MATERIALS ARE IN ACCORDANCE WITH THE AASHTO LRFD BRIDGE DESIGN SPECIFICATIONS, 5th Ed, SERIES OF 2010, EXCEPT AS NOTED IN THE CURRENT IOWA BRIDGE DESIGN MANUAL.

REINFORCING STEEL IN ACCORDANCE WITH LRFD AASHTO SECTION 5, GRADE 60.

HIGH PERFORMANCE SELF CONSOLIDATING CONCRETE FOR THE COLUMNS OF THE PIERS, f'c = 5,000 PSI.

NOTES:

1. THE MINIMUM HEIGHT OF THE PIER MOCKUP IS 8'-0. THE LIMITS ARE SHOWN IN THE ELEVATION.

2. THE HEIGHT OF THE PIER MOCKUP MAY BE INCREASED AS REQUIRED TO SUCCESSFULLY DEMONSTRATE THE USE OF A DROP HEIGHT GREATER THAN 8'-0.

3. ALL REINFORCING MUST BE INCLUDED IN THE PIER MOCKUP FOR ITS FULL HEIGHT. DETAILS OF THE PIER MOCKUP REINFORCING SHOULD MATCH THE PIER COLUMN REINFORCING DETAILS FOR PIER 18 OF THE EASTBOUND VIADUCT (DESIGN NO. 3408).

4. THE CONCRETE AND REINFORCING FOR THE PIER MOCKUP SHALL MEET ALL THE REQUIREMENTS OF THE PRODUCTION PIERS.

5. THE PIER MOCKUP SHALL BE CAST ON A 1'-0 CONCRETE SLAB.

6. THE PIER MOCKUP SHALL MEET THE REQUIREMENTS STATED IN THE DEVELOPMENTAL SPECIFICATIONS FOR HIGH PERFORMANCE SELF CONSOLIDATING CONCRETE (HP-SCC).

PIER MOCKUP DESIGN

LICENSED PROFESSIONAL ENGINEER
David J. Morrill
11799
IOWA

I hereby certify that this engineering document was prepared by me or under my direct personal supervision and that I am a duly licensed Professional Engineer under the laws of the State of Iowa.

Signature Date

David J. Morrill
Printed or Typed Name

My license renewal date is December 31, 2011

Pages or sheets covered by this seal: _____

DESIGN FOR PIER MOCKUP
EB I-74 VIADUCT

PIER MOCKUP DETAILS

SCOTT COUNTY

IOWA DEPARTMENT OF TRANSPORTATION - HIGHWAY DIVISION

DESIGN SHEET NO. 1 OF 1 FILE NO. 30253

TBD

benesch engineers · scientists · planners
Alfred Benesch & Company
205 North Michigan Avenue, Suite 2400
Chicago, Illinois 60601
312-565-0450 Job No. 10061

ESTIMATED PROJECT QUANTITIES
(UP TO A 5 DIVISION PROJECT)

Division 1: IOWA DOT COST
Division 2: CITY OF BETTENDORF COST
Division 3: 50% MOLINE /50% BETTENDORF COST
Division 4: IOWA/ILLINOIS DOT COST (NO FEDERAL PARTICIPATION)
Division 5: PRIVATE UTILITY

Item No.	Item Code	Item	Unit	Quantities										
				Estimated						As Built				
				Division 1	Division 2	Division 3	Division 4	Division 5	Total	Division 1	Division 2	Division 3	Division 4	Division 5
1	2301-0685550	BRIDGE APPROACH PAVEMENT, AS PER PLAN	SY	1301.3	0	0	0	0	1301.3					
2	2435-0254804	BARRIER INTAKE, SW-548, TOP ONLY	EACH	1	0	0	0	0	1					
3	2511-6745900	REMOVAL OF SIDEWALK	SY	235.6	0	0	0	0	235.6					
4	2511-7526004	SIDEWALK, P.C. CONCRETE, 4 IN.	SY	235.6	0	0	0	0	235.6					
5	2518-6910000	SAFETY CLOSURE	EACH	21	0	0	0	0	21					
6	2520-3350015	FIELD OFFICE	EACH	1	0	0	0	0	1					
7	2523-0000200	ELECTRICAL CIRCUITS	LF	3565	4250	0	0	0	7815					
8	2523-0000310	HANDHOLES AND JUNCTION BOXES	EACH	104	0	0	0	0	104					
9	2523-0000400	CONTROL CABINET	EACH	1	0	0	0	0	1					
10	2528-8445110	TRAFFIC CONTROL	LS	1	0	0	0	0	1					
11	2528-8445113	FLAGGERS	EACH											
12	2599-9999005	AESTHETIC LIGHT, INSTALL ONLY (TYPE "LC")	EACH	0	8	0	0	0	8					
13	2599-9999005	AESTHETIC LIGHT, INSTALL ONLY (TYPE "LD")	EACH	0	28	0	0	0	28					
14	2599-9999005	AESTHETIC LIGHT, INSTALL ONLY (TYPE "LE")	EACH	0	47	0	0	0	47					
15	2599-9999005	CABINET FOOTING, FURNISH AND INSTALL, 36 INCH X 24 INCH X 17 INCH	EACH	0	0	0	2	0	2					
16	2599-9999005	CABINET, FURNISH AND INSTALL, 36 INCH x 24 INCH x 17 INCH	EACH	0	0	0	3	0	3					
17	2599-9999005	HANDHOLE, FURNISH AND INSTALL, TYPE III	EACH	0	0	0	1	0	1					
18	2599-9999005	JUNCTION BOX, FURNISH AND INSTALL, 10 INCH x 8 INCH x 4 INCH	EACH	0	0	0	3	0	3					
19	2599-9999005	JUNCTION BOX, FURNISH AND INSTALL, 12 INCH x 10 INCH x 6 INCH	EACH	0	0	0	2	0	2					
20	2599-9999005	JUNCTION BOX, FURNISH AND INSTALL, 30 INCH x 30 INCH x 16 INCH	EACH	0	0	0	4	0	4					
21	2599-9999005	LIGHTING POLES, INSTALL ONLY	EACH	10	1	0	0	0	11					
22	2599-9999005	PEDESTRIAN LUMINIARE, INSTALL ONLY	EACH	0	1	0	0	0	1					
23	2599-9999005	POLE, FURNISH AND INSTALL, STEEL BLACK PAINTED, 45 FOOT	EACH	0	0	0	3	0	3					
24	2599-9999005	POWER CONNECTION TO ELECTRICAL RACK	EACH	0	0	0	3	0	3					
25	2599-9999005	POWER INSTALLED FOUNDATION	EACH	0	0	0	2	0	2					
26	2599-9999005	ROADWAY LUMINAIRE, INSTALL ONLY	EACH	10	0	0	0	0	10					
27	2599-9999005	UNDERDECK LUMINAIRE, INSTALL ONLY	EACH	6	5	0	0	0	11					
28	2599-9999009	CABLE, FURNISH AND INSTALL, #12	LF	0	0	0	1190	0	1190					
29	2599-9999009	CABLE, FURNISH AND INSTALL, #4	LF	0	0	0	1290	0	1290					
30	2599-9999009	CABLE, FURNISH AND INSTALL, #4/0	LF	0	0	0	355	0	355					
31	2599-9999009	CABLE, FURNISH AND INSTALL, #8	LF	0	0	0	85	0	85					
32	2599-9999009	CONDUIT, FURNISH AND BORE, HDPE, 2 INCH	LF	0	0	0	260	0	260					
33	2599-9999009	CONDUIT, FURNISH AND INSTALL, LIQUID-TIGHT FLEXIBLE, 1 INCH	LF	168	0	0	0	0	168					
34	2599-9999009	CONDUIT, FURNISH AND INSTALL, LIQUID-TIGHT FLEXIBLE, 3 INCH	LF	6	0	0	0	0	6					
35	2599-9999009	CONDUIT, FURNISH AND INSTALL, PVC, 3 INCH	LF	220	0	0	0	0	220					
36	2599-9999009	CONDUIT, FURNISH AND INSTALL, PVC COATED RIGID GALVANIZED STEEL, 1 INCH	LF	862	0	0	280	0	1142					
37	2599-9999009	CONDUIT, FURNISH AND INSTALL, PVC COATED RIGID GALVANIZED STEEL, 2 INCH	LF	0	0	0	4725	3015	7740					
38	2599-9999009	CONDUIT, FURNISH AND INSTALL, PVC COATED RIGID GALVANIZED STEEL, 3 INCH	LF	358	0	0	570	0	928					
39	2599-9999009	CONDUIT, FURNISH AND PLOW, HDPE, 2 INCH	LF	0	0	0	900	0	900					
40	2599-9999009	CONDUIT, FURNISH AND PLOW, HDPE, 3 INCH	LF	0	0	0	20	0	20					
41	2602-0000101	MAINTENANCE OF SILT FENCE OR SILT FENCE FOR DITCH CHECK	LF	1400	0	0	0	0	1400					
42	2602-0010010	MOBILIZATIONS, EROSION CONTROL	EACH	1	0	0	0	0	1					
43	2602-0010020	MOBILIZATIONS, EMERGENCY EROSION CONTROL	EACH	1	0	0	0	0	1					

ROADWAY DESIGN

LICENSED PROFESSIONAL ENGINEER
STEVEN S. SWEET
12558
IOWA

I hereby certify that this engineering document was prepared by me or under my direct personal supervision and that I am a duly licensed Professional Engineer under the laws of the State of Iowa.

Signature Date

Printed or Typed Name
My license renewal date is December 31, 20 16

Pages or sheets covered by this seal: C.1-C.7, G.2-G.9, G.18, G.23, J.1

ESTIMATE REFERENCE INFORMATION

Item No.	Item Code	Description
1	2301-0685550	BRIDGE APPROACH PAVEMENT, AS PER PLAN
		Includes all items associated with the pay limits for bridge approach pavement as shown on Modified Road Plan
		RK-20, Modified Road Plan RK-21, and Modified Road Plan RK-23. See U Sheets for details and tabulations.
2	2435-0254804	BARRIER INTAKE, SW-548, TOP ONLY
		See Tab. 104-5A on Sheet C.2.
3	2511-6745900	REMOVAL OF SIDEWALK
		See Tab. 110-5 on C Sheets. Item is for removing sidewalk along US 67 and Mississippi Blvd, to facilitate
		pier and slopewall construction.
4	2511-7526004	SIDEWALK, P.C. CONCRETE, 4 IN.
		See Tab. 113-1 on C Sheets. Item is for replacing sidewalk along US 67 and Mississippi Blvd, removed due to
		pier and slopewall construction.
5	2518-6910000	SAFETY CLOSURE
		Item includes 17 hazard closures for Pier Construction (16 piers on Mainline Viaduct and 1 Pier on Ramp C
		Bridge) and 4 Road Closures at abutments (1 for mainline, 2 for Ramp A and 1 for Ramp C). Item is estimated at
		220 LF per closure.
7	2523-0000200	ELECTRICAL CIRCUITS
		Roadway and Aesthetic Lighting (P Sheets):
		Bid to include 600 volt fuses at 5 amperes for luminaire supply (L-1 connectors) and 20 amperes for tap
		circuit protection (Y-1 connectors) located in the junction boxes or handholes. Included are 152 type L-1
		connectors, 96 Y-1 connectors, 50 type Y-3 connectors, and 278 type L-2 connectors. Electrical circuit
		length is calculated from plan dimensions as the linear, one-way length of both new and existing embedded
		conduits. No allowance has been added to this quantity. Allowances have been added to all wire and cable
		quantities listed in Tab 108-12 on sheet P.1.
8	2523-0000310	HANDHOLES AND JUNCTION BOXES
		All handholes to be RM-42 Type 2, except where noted.
9	2523-0000400	CONTROL CABINET
		Control cabinet per RM-36, of the size specified.
10	2528-8445110	TRAFFIC CONTROL
		See Tab. 108-23A on Sheet J.1.
12	2599-9999005	AESTHETIC LIGHT, INSTALL ONLY (TYPE "LC")
		Aesthetic Light Type "LC" to be supplied in a separate supply contract. The lights shall be installed per
		details shown on sheets P.17 and P.18 in locations shown on the P sheets. See Tabulation on sheet P.2 for
		additional details. Refer to Special Provisions for additional information.
13	2599-9999005	AESTHETIC LIGHT, INSTALL ONLY (TYPE "LD")
		Aesthetic Light Type "LD" to be supplied in a separate supply contract. The lights shall be installed per
		details shown on sheets P.17 and P.18 in locations shown on the P sheets. See Tabulation on sheet P.2 for
		additional details. Refer to Special Provisions for additional information.
14	2599-9999005	AESTHETIC LIGHT, INSTALL ONLY (TYPE "LE")
		Aesthetic Light Type "LE" to be supplied in a separate supply contract. The lights shall be installed per
		details shown on sheet P.19 in locations shown on the P sheets. See Tabulation on sheet P.2 for additional
		details. Refer to Special Provisions for additional information.
15	2599-9999005	CABINET FOOTING, FURNISH AND INSTALL, 36 INCH x 24 INCH x 17 INCH
		DESCRIPTION
		This work shall consist of furnishing and installing the 36 inch x 24 inch x 17 inch Cabinet Footings for the
		proposed ITS infrastructure within this project. This work shall include all materials, hardware, and labor
		required for complete mounting and installation of the Footings.
		MATERIALS
		Refer to the Special Provisions for ITS Infrastructure.
		METHOD OF MEASUREMENT
		Refer to the Special Provisions for ITS Infrastructure.
		BASIS OF PAYMENT
		Refer to the Special Provisions for ITS Infrastructure.

100-4A
10-29-02

ESTIMATE REFERENCE INFORMATION

Item No.	Item Code	Description
16	2599-9999005	CABINET, FURNISH AND INSTALL, 36 INCH x 24 INCH x 17 INCH
		DESCRIPTION
		This work shall consist of furnishing and installing the 36 inch x 24 inch x 17 inch Cabinets for the proposed
		ITS infrastructure within this project. This work shall include all materials, hardware, and labor required
		for complete mounting and installation of the Cabinets.
		MATERIALS
		Refer to the Special Provisions for ITS Infrastructure.
		METHOD OF MEASUREMENT
		Refer to the Special Provisions for ITS Infrastructure.
		BASIS OF PAYMENT
		Refer to the Special Provisions for ITS Infrastructure.
17	2599-9999005	HANDHOLE, FURNISH AND INSTALL, TYPE III
		DESCRIPTION
		This work shall consist of furnishing and installing the Type III Handholes for the proposed ITS infrastructure
		within this project. This work shall include all materials, hardware, and labor required for complete
		installation of the Handholes.
		MATERIALS
		Refer to the Special Provisions for ITS Infrastructure.
		METHOD OF MEASUREMENT
		Refer to the Special Provisions for ITS Infrastructure.
		BASIS OF PAYMENT
		Refer to the Special Provisions for ITS Infrastructure.
18	2599-9999005	JUNCTION BOX, FURNISH AND INSTALL, 10 INCH x 8 INCH x 4 INCH
		DESCRIPTION
		This work shall consist of furnishing and installing the 10 inch x 8 inch x 4 inch Junction Boxes for the
		proposed ITS infrastructure within this project. This work shall include all materials, hardware, and labor
		required for complete mounting and installation of the Junction Boxes.
		MATERIALS
		Refer to the Special Provisions for ITS Infrastructure.
		METHOD OF MEASUREMENT
		Refer to the Special Provisions for ITS Infrastructure.
		BASIS OF PAYMENT
		Refer to the Special Provisions for ITS Infrastructure.
19	2599-9999005	JUNCTION BOX, FURNISH AND INSTALL, 12 INCH x 10 INCH x 6 INCH
		DESCRIPTION
		This work shall consist of furnishing and installing the 12 inch x 10 inch x 6 inch Junction Boxes for the
		proposed ITS infrastructure within this project. This work shall include all materials, hardware, and labor
		required for complete mounting and installation of the Junction Boxes.
		MATERIALS
		Refer to the Special Provisions for ITS Infrastructure.
		METHOD OF MEASUREMENT
		Refer to the Special Provisions for ITS Infrastructure.
		BASIS OF PAYMENT
		Refer to the Special Provisions for ITS Infrastructure.
20	2599-9999005	JUNCTION BOX, FURNISH AND INSTALL, 30 INCH x 30 INCH x 16 INCH
		DESCRIPTION
		This work shall consist of furnishing and installing the 30 inch x 30 inch x 16 inch Junction Boxes for the
		proposed ITS infrastructure within this project. This work shall include all materials, hardware, and labor
		required for complete mounting and installation of the Junction Boxes.
		MATERIALS
		Refer to the Special Provisions for ITS Infrastructure.
		METHOD OF MEASUREMENT
		Refer to the Special Provisions for ITS Infrastructure.
		BASIS OF PAYMENT
		Refer to the Special Provisions for ITS Infrastructure.

ESTIMATE REFERENCE INFORMATION

Item No.	Item Code	Description
21	2599-9999005	LIGHTING POLES, INSTALL ONLY
		Light pole to be supplied in a separate supply contract. The light poles shall be installed in locations and
		per details shown on the P sheets. See Tabulation on Sheet P.2 for details. Refer to Special Provisions
		for additional information.
22	2599-9999005	PEDESTRIAN LUMINIARE, INSTALL ONLY
		Luminaires to be supplied in a separate supply contract. The luminaires shall be installed in locations and
		per details shown in the P sheets. See Tabulation on Sheet P.2 for details. Refer to Special Provisions
		for additional information.
23	2599-9999005	POLE, FURNISH AND INSTALL, STEEL BLACK PAINTED, 45 FOOT
		DESCRIPTION
		This work shall consist of furnishing and installing the 45 foot Black Painted Steel Pole for the proposed ITS
		infrastructure within this project. This work shall include all materials, hardware, and labor required for
		complete mounting and installation of the Anodized Aluminum Pole.
		MATERIALS
		Refer to the Special Provisions for ITS Infrastructure.
		METHOD OF MEASUREMENT
		Refer to the Special Provisions for ITS Infrastructure.
		BASIS OF PAYMENT
		Refer to the Special Provisions for ITS Infrastructure.
24	2599-9999005	POWER CONNECTION TO ELECTRICAL RACK
		DESCRIPTION
		This work shall consist of connecting power to existing electrical circuits for the proposed ITS infrastructure
		within this project. This work shall include all materials, hardware, and labor required for complete
		connection of power to the meter.
		MATERIALS
		Refer to the Special Provisions for ITS Infrastructure.
		METHOD OF MEASUREMENT
		Refer to the Special Provisions for ITS Infrastructure.
		BASIS OF PAYMENT
		Refer to the Special Provisions for ITS Infrastructure.
25	2599-9999005	POWER INSTALLED FOUNDATION
		DESCRIPTION
		This work shall consist of installing pole foundations for the proposed ground mounted ITS poles. This work
		shall include all materials, hardware, and labor required for complete installation of the foundations.
		MATERIALS
		Refer to the Special Provisions for ITS Infrastructure.
		METHOD OF MEASUREMENT
		Refer to the Special Provisions for ITS Infrastructure.
		BASIS OF PAYMENT
		Refer to the Special Provisions for ITS Infrastructure.
26	2599-9999005	ROADWAY LUMINAIRE, INSTALL ONLY
		Luminaires to be supplied in a separate supply contract. The luminaires shall be installed in locations and
		per details shown in the P sheets. See Tabulation on Sheet P.2 for details. Refer to Special Provisions
		for additional information.
27	2599-9999005	UNDERDECK LUMINAIRE, INSTALL ONLY
		Luminaires to be supplied in a separate supply contract. The underdeck luminaires shall be installed in
		locations and per details shown in the P sheets. See Tabulation on Sheet P.2 for details. Refer to Special
		Provisions for additional information.
28	2599-9999009	CABLE, FURNISH AND INSTALL, #12
		DESCRIPTION
		This work shall consist of furnishing and installing the #12 Copper Cable for the proposed Electrical
		Circuits within this project. This work shall include all materials, hardware, and labor required for complete
		installation and full operation of the Cable.
		MATERIALS
		Refer to Section 4185.12 of the Standard Specifications for cable. Refer to Section 4185.11 for connector
		assemblies.
		INSTALLATION
		Refer to Section 2523.03 Q of the Standard Specifications.
		METHOD OF MEASUREMENT
		Linear feet as shown in the contract documents.
		BASIS OF PAYMENT
		Payment is full compensation for materials, equipment, and installation of electric cable in conduit between
		connectors and equipment. Connectors shall not be paid for separately but shall be incidental to cable.

100-4A
10-29-02

ESTIMATE REFERENCE INFORMATION

Item No.	Item Code	Description
29	2599-9999009	CABLE, FURNISH AND INSTALL, #4
		DESCRIPTION
		This work shall consist of furnishing and installing the #4 Copper Cable for the proposed Electrical
		Circuits within this project. This work shall include all materials, hardware, and labor required for complete
		installation and full operation of the Cable.
		MATERIALS
		Refer to Section 4185.12 of the Standard Specifications for cable. Refer to Section 4185.11 for connector
		assemblies.
		INSTALLATION
		Refer to Section 2523.03 Q of the Standard Specifications.
		METHOD OF MEASUREMENT
		Linear feet as shown in the contract documents.
		BASIS OF PAYMENT
		Payment is full compensation for materials, equipment, and installation of electric cable in conduit between
		connectors and equipment. Connectors shall not be paid for separately but shall be incidental to cable.
30	2599-9999009	CABLE, FURNISH AND INSTALL, #4/0
		DESCRIPTION
		This work shall consist of furnishing and installing the #4/0 Copper Cable for the proposed Electrical
		Circuits within this project. This work shall include all materials, hardware, and labor required for complete
		installation and full operation of the Cable.
		MATERIALS
		Refer to Section 4185.12 of the Standard Specifications for cable. Refer to Section 4185.11 for connector
		assemblies.
		INSTALLATION
		Refer to Section 2523.03 Q of the Standard Specifications.
		METHOD OF MEASUREMENT
		Linear feet as shown in the contract documents.
		BASIS OF PAYMENT
		Payment is full compensation for materials, equipment, and installation of electric cable in conduit between
		connectors and equipment. Connectors shall not be paid for separately but shall be incidental to cable.
31	2599-9999009	CABLE, FURNISH AND INSTALL, #8
		DESCRIPTION
		This work shall consist of furnishing and installing the #8 Copper Cable for the proposed Electrical
		Circuits within this project. This work shall include all materials, hardware, and labor required for complete
		installation and full operation of the Cable.
		MATERIALS
		Refer to Section 4185.12 of the Standard Specifications for cable. Refer to Section 4185.11 for connector
		assemblies.
		INSTALLATION
		Refer to Section 2523.03 Q of the Standard Specifications.
		METHOD OF MEASUREMENT
		Linear feet as shown in the contract documents.
		BASIS OF PAYMENT
		Payment is full compensation for materials, equipment, and installation of electric cable in conduit between
		connectors and equipment. Connectors shall not be paid for separately but shall be incidental to cable.
32	2599-9999009	CONDUIT, FURNISH AND BORE, HDPE, 2 INCH
		DESCRIPTION
		This work shall consist of furnishing and boring 2 inch High Density Polyethylene (HDPE) Conduit for the
		proposed ITS Communication Network and Electrical Circuits within this project. This work shall include all
		materials, hardware, and labor required for complete mounting and installation of the Conduit.
		MATERIALS
		Refer to the Special Provisions for ITS INFRASTRUCTURE.
		METHOD OF MEASUREMENT
		Refer to the Special Provisions for ITS INFRASTRUCTURE.
		BASIS OF PAYMENT
		Refer to the Special Provisions for ITS INFRASTRUCTURE.

ESTIMATE REFERENCE INFORMATION

Item No.	Item Code	Description
33	2599-9999009	CONDUIT, FURNISH AND INSTALL, LIQUID-TIGHT FLEXIBLE, 1 INCH
		DESCRIPTION
		This work shall consist of furnishing and installing 1 inch Liquid-Tight Flexible Conduit.
		This work shall include all materials, hardware, and labor required for complete mounting and installation of
		the Conduit.
		MATERIALS
		The conduit shall be manufactured according to UL Standard 1660 Type B. The conduit shall have a temperature
		range of -20 to 176 degrees Fahrenheit (-29 to 80 degrees Celsius). The thermoplastic covering shall
		be oil, water, chemical, and UV resistant. Conduit grounding shall be by a separate grounding
		conductor.
		INSTALLATION
		Liquid-tight flexible conduit shall not be used in lieu of bending conduit. Liquid-Tight flexible conduit
		shall only to be used to isolate structure to structure movement or to isolate vibration as shown on the
		plans.
		METHOD OF MEASUREMENT
		Linear feet as shown in the contract documents.
		BASIS OF PAYMENT
		Payment is full compensation for materials, equipment, and installation of CONDUIT, FURNISH AND INSTALL,
		LIQUID-TIGHT FLEXIBLE, 1 INCH.
34	2599-9999009	CONDUIT, FURNISH AND INSTALL, LIQUID-TIGHT FLEXIBLE, 3 INCH
		DESCRIPTION
		This work shall consist of furnishing and installing 3 inch Liquid-Tight Flexible Conduit.
		This work shall include all materials, hardware, and labor required for complete mounting and installation of
		the Conduit.
		MATERIALS
		The conduit shall be manufactured according to UL Standard 360. The conduit shall have a temperature
		range of -4 to 140 degrees Fahrenheit (-20 to 60 degrees Celsius). The thermoplastic covering shall
		be oil resistant. Conduit shall have an integral copper core for current carrying purposes or have a
		copper ground wire embedded in the sheath.
		Each conduit shall contain one 3/8" nylon pull tape. Pull tape shall be clearly marked with durable,
		sequential footage markings. Pull tape shall have a minimum proper tensile strength of 600 lbs.
		INSTALLATION
		Liquid-tight flexible conduit shall not be used in lieu of bending conduit. Liquid-Tight flexible conduit
		shall only to be used to isolate structure to structure movement or to isolate vibration as shown on the
		plans.
		METHOD OF MEASUREMENT
		Linear feet as shown in the contract documents.
		BASIS OF PAYMENT
		Payment is full compensation for materials, equipment, and installation of CONDUIT, FURNISH AND INSTALL,
		LIQUID-TIGHT FLEXIBLE, 3 INCH.
35	2599-9999009	CONDUIT, FURNISH AND INSTALL, PVC, 3 INCH
		DESCRIPTION
		This work shall consist of furnishing and installing a 3 inch PVC Conduit, fittings and accessories as part
		of a raceway either laid in trench or bored and pulled in place.
		MATERIALS
		The conduit shall meet the requirements for PVC conduit of Section 4185.10(D).
		Each conduit shall contain one 3/8" nylon pull tape. Pull tape shall be clearly marked with durable,
		sequential footage markings. Pull tape shall have a minimum proper tensile strength of 600 lbs.
		INSTALLATION
		The installation shall meet the requirements of Section 2523.03(N).
		METHOD OF MEASUREMENT
		Linear feet as shown in the contract documents.
		BASIS OF PAYMENT
		Payment is full compensation for materials, equipment, and installation of CONDUIT, FURNISH AND INSTALL,
		PVC, 3 INCH.

100-4A
10-29-02

ESTIMATE REFERENCE INFORMATION

Item No.	Item Code	Description
36	2599-9999009	CONDUIT, FURNISH AND INSTALL, PVC COATED RIGID GALVANIZED STEEL, 1 INCH
		DESCRIPTION
		This work shall consist of furnishing and installing 1 inch PVC Coated Rigid Galvanized Steel Conduit.
		This work shall include all materials, including hanger rods, hardware, and labor required for complete
		mounting and installation of the Conduit. All concrete inserts required for the attachment of the conduit
		is included with the respective concrete pay items. See bridge plans for more information.
		MATERIALS
		The conduit prior to coating shall meet the requirements for rigid steel conduit of Section 4185.10 B of the
		Standard Specifications and be manufactured according to NEMA Standard No. RN1. The PVC coating shall meeting
		the following characteristics: Hardness shall be 85+ Shore A Durometer; Dielectric Strength of 400V/mil @
		60 Hz; Aging shall be 1,000 Hours Atlas Weatherometer; Brittleness Temperature shall be 0° F when tested
		according to ASTM D 746; and Elongation shall be 200 percent.
		The exterior galvanized surfaces shall be coated with a primer before the PVC coating to ensure a bond between
		the zinc substrate and the PVC coating. The bond strength created shall be greater than the tensile strength
		of the plastic coating. The nominal thickness of the PVC coating shall be 40 mils (1 mm).
		A two part urethane coating shall be applied to the interior of the conduit. The internal coating shall have
		a nominal thickness of 2 mils (0.05 mm). The interior coating shall be applied in a manner so there are no
		runs, drips, or pinholes at any point. The coating shall not peel, flake, or chip off after a cut is made in
		the conduit or a scratch is made in the coating.
		Each conduit shall contain one 3/8" nylon pull tape. Pull tape shall be clearly marked with durable, sequential
		footage markings. Pull tape shall have a minimum proper tensile strength of 600 lbs.
		INSTALLATION
		PVC coated conduit pipe vise jaw adapters shall be used when the conduit is being clamped to avoid damaging
		the PVC coating. PVC coated conduit shall be cut with a roller cutter or by other means approved by the
		conduit manufacturer. After any cutting or threading operations are completed, the bare steel shall be
		touched up with the conduit manufacturer's touch up compound.
		METHOD OF MEASUREMENT
		Linear feet as shown in the contract documents.
		BASIS OF PAYMENT
		Payment is full compensation for materials, equipment, and installation of CONDUIT, FURNISH AND INSTALL,
		PVC COATED RIGID GALVANIZED STEEL, 1 INCH.
37	2599-9999009	CONDUIT, FURNISH AND INSTALL, PVC COATED RIGID GALVANIZED STEEL, 2 INCH
		DESCRIPTION
		This work shall consist of furnishing and installing 2 inch PVC Coated Rigid Galvanized Steel Conduit.
		This work shall include all materials, including hanger rods, hardware, and labor required for complete
		mounting and installation of the Conduit. All concrete inserts required for the attachment of the conduit
		is included with the respective concrete pay items. See bridge plans for more information.
		MATERIALS
		The conduit prior to coating shall meet the requirements for rigid steel conduit of Section 4185.10 B of the
		Standard Specifications and be manufactured according to NEMA Standard No. RN1. The PVC coating shall meeting
		the following characteristics: Hardness shall be 85+ Shore A Durometer; Dielectric Strength of 400V/mil @ 60 Hz;
		Aging shall be 1,000 Hours Atlas Weatherometer; Brittleness Temperature shall be 0° F when tested according to
		ASTM D 746; and Elongation shall be 200 percent.
		The exterior galvanized surfaces shall be coated with a primer before the PVC coating to ensure a bond between
		the zinc substrate and the PVC coating. The bond strength created shall be greater than the tensile strength
		of the plastic coating. The nominal thickness of the PVC coating shall be 40 mils (1 mm).
		A two part urethane coating shall be applied to the interior of the conduit. The internal coating shall have
		a nominal thickness of 2 mils (0.05 mm). The interior coating shall be applied in a manner so there are no
		runs, drips, or pinholes at any point. The coating shall not peel, flake, or chip off after a cut is made in
		the conduit or a scratch is made in the coating.
		Each conduit shall contain one 3/8" nylon pull tape. Pull tape shall be clearly marked with durable, sequential
		footage markings. Pull tape shall have a minimum proper tensile strength of 600 lbs.
		INSTALLATION
		PVC coated conduit pipe vise jaw adapters shall be used when the conduit is being clamped to avoid damaging
		the PVC coating. PVC coated conduit shall be cut with a roller cutter or by other means approved by the conduit
		manufacturer. After any cutting or threading operations are completed, the bare steel shall be touched up with
		the conduit manufacturer's touch up compound.
		METHOD OF MEASUREMENT
		Linear feet as shown in the contract documents.
		BASIS OF PAYMENT
		Payment is full compensation for materials, equipment, and installation of CONDUIT, FURNISH AND INSTALL,
		PVC COATED RIGID GALVANIZED STEEL, 2 INCH.

ESTIMATE REFERENCE INFORMATION

Item No.	Item Code	Description
38	2599-9999009	CONDUIT, FURNISH AND INSTALL, PVC COATED RIGID GALVANIZED STEEL, 3 INCH
		DESCRIPTION
		This work shall consist of furnishing and installing 3 inch PVC Coated Rigid Galvanized Steel Conduit
		This work shall include all materials, hardware, and labor required for complete mounting and installation of
		the Conduit.
		MATERIALS
		The conduit prior to coating shall meet the requirements for rigid steel conduit of Section 4185.10 B of the
		Standard Specifications and be manufactured according to NEMA Standard No. RN1. The PVC coating shall meeting
		the following characteristics: Hardness shall be 85+ Shore A Durometer; Dielectric Strength of 400V/mil @
		60 Hz; Aging shall be 1,000 Hours Atlas Weatherometer; Brittleness Temperature shall be 0° F when tested
		according to ASTM D 746; and Elongation shall be 200 percent.
		The exterior galvanized surfaces shall be coated with a primer before the PVC coating to ensure a bond between
		the zinc substrate and the PVC coating. The bond strength created shall be greater than the tensile strength
		of the plastic coating. The nominal thickness of the PVC coating shall be 40 mils (1 mm).
		A two part urethane coating shall be applied to the interior of the conduit. The internal coating shall have
		a nominal thickness of 2 mils (0.05 mm). The interior coating shall be applied in a manner so there are no
		runs, drips, or pinholes at any point. The coating shall not peel, flake, or chip off after a cut is made in
		the conduit or a scratch is made in the coating.
		Each conduit shall contain one 3/8" nylon pull tape. Pull tape shall be clearly marked with durable,
		sequential footage markings. Pull tape shall have a minimum proper tensile strength of 600 lbs.
		INSTALLATION
		PVC coated conduit pipe vise jaw adapters shall be used when the conduit is being clamped to avoid damaging
		the PVC coating. PVC coated conduit shall be cut with a roller cutter or by other means approved by the
		conduit manufacturer. After any cutting or threading operations are completed, the bare steel shall be
		touched up with the conduit manufacturer's touch up compound.
		METHOD OF MEASUREMENT
		Linear feet as shown in the contract documents.
		BASIS OF PAYMENT
		Payment is full compensation for materials, equipment, and installation of CONDUIT, FURNISH AND INSTALL,
		PVC COATED RIGID GALVANIZED STEEL, 3 INCH.
39	2599-9999009	CONDUIT, FURNISH AND PLOW, HDPE, 2 INCH
		DESCRIPTION
		This work shall consist of furnishing and plowing 2 inch High Density Polyethylene (HDPE) Conduit for the
		proposed ITS Communication Network and Electrical Circuits within this project. This work shall include all
		materials, hardware, and labor required for complete mounting and installation of the Conduit.
		MATERIALS
		Refer to the Special Provisions for ITS INFRASTRUCTURE.
		METHOD OF MEASUREMENT
		Refer to the Special Provisions for ITS INFRASTRUCTURE.
		BASIS OF PAYMENT
		Refer to the Special Provisions for ITS INFRASTRUCTURE.
40	2599-9999009	CONDUIT, FURNISH AND PLOW, HDPE, 3 INCH
		DESCRIPTION
		This work shall consist of furnishing and plowing 3 inch High Density Polyethylene (HDPE) Conduit for the
		proposed ITS Communication Network and Electrical Circuits within this project. This work shall include all
		materials, hardware, and labor required for complete mounting and installation of the Conduit.
		MATERIALS
		Refer to the Special Provisions for ITS INFRASTRUCTURE.
		METHOD OF MEASUREMENT
		Refer to the Special Provisions for ITS INFRASTRUCTURE.
		BASIS OF PAYMENT
		Refer to the Special Provisions for ITS INFRASTRUCTURE.
41	2602-0000101	MAINTENANCE OF SILT FENCE OR SILT FENCE FOR DITCH CHECK
		Item is for 350' of existing silt fence to be maintained at each abutment
42	2602-0010010	MOBILIZATIONS, EROSION CONTROL
		Refer to Supplemental Specifications for additional information.
43	2602-0010020	MOBILIZATIONS, EMERGENCY EROSION CONTROL
		Refer to Supplemental Specifications for additional information.

254-1
10-02-01

INCIDENT MANAGEMENT

An incident management plan, provided by the District Office, will be discussed at the pre-construction conference.

WHKS-1

ENVIRONMENTAL PROTECTION

Refer to SP-150XX for specific Environmental Protection provisions for this project.

232-9
Modified

THREATENED/ENDANGERED BATS

Cut down all trees included in Clearing and Grubbing after September 30 and before April 1. These trees may be inhabited by State and Federal listed threatened/endangered bat species. Removing a tree between April 1 and September 30 being used by a listed bat constitutes a “taking” of a protected species, which is punishable by law.

111-25
10-18-11

INDEX OF TABULATIONS

Tabulation	Tabulation Title	Sheet No.
100-1C	Estimated Project Quantities (Up to a 5 Division Project)	C.1
100-1D	ITS Project Description	N.1
104-5A	Intakes and Utility Accesses	C.6
105-4	Standard Road Plans	C.6
108-1	Tabulation of Lighting Installation	P.2
108-11A	Highway Lighting Data (Roadway and Aesthetic Lighting)	P.1
108-2	Tabulation of Electrical Ducts (Roadway and Aesthetic Lighting)	P.3
108-12	Tabulation of Wire, Cable, and Connectors (Roadway and Aesthetic Lighting)	P.1
108-23A	Traffic Control Plan	J.1
110-5	Sidewalk Removal	C.6
110-13	Delivery and Stockpiling	P.1
111-01	Coordinated Operations	J.1
111-01	ITS Coordinated Operations	N.1
113-1	Sidewalks	C.6
	Listing of ITS Cabinet Work	N.1
	Listing of ITS Conduit Work	N.2
	Listing of ITS Handhole & Junction Box Work	N.1

105-4
10-18-11

STANDARD ROAD PLANS

The following Standard Road Plans apply to construction work on this project.

Number	Date	Title
BA-104	04-20-10	34" Concrete Barrier for use with Reinforced Paved Shoulder
BA-106	10-21-14	Reinforced Paved Shoulder for Concrete Barrier
BR-213	04-21-15	Bridge Approach (Abutting Pavement)
DR-303	10-20-15	Subdrains (Longitudinal)
DR-304	04-21-15	Outlets for Longitudinal, Transverse and Backslope Subdrains
LI-103	10-21-14	Conduit and Precast Handholes
LI-104	10-21-14	Junction box (cast Iron)
LI-120	10-21-14	Underdeck Lighting
LI-141	10-21-14	Electrical Installation (Roadway Ducts)
LI-142	04-21-15	Electrical Installation (Bases)
LI-152	10-21-14	Control Cabinet (Pad-Mounted)
LI-201	10-21-14	Light Pole Foundation
PV-101	04-21-15	Joints
PV-102	04-15-14	PCC Curb Details
SI-881	10-15-13	Special Signs for Workzones
SW-508	10-21-14	Single Open-Throat Intake, Large Box
SW-548	04-21-15	Single-Grate Barrier Intake, Circular
TC-1	04-16-13	Work Not Affecting Traffic (Two-Lane or Multi-Lane)
TC-202	04-21-15	Work Within 15 ft of Traveled Way
TC-213	04-17-12	Lane Closure with Flaggers
TC-251	04-17-12	Temporary Road Closure
TC-451	04-21-15	Temporary Road Closure on Divided Highway

104-5A
10-15-13

INTAKES AND UTILITY ACCESSES

* Bid Item
** For SW-545

No.	Location Station	Type or Standard Road Plan*	Form Grade Elev.	Bottom Well Elev.	Extension Length** FT	Notes
758	6804+35.21 12.87' LT	SW-548	605.9	600.7		TOP ONLY

110-5
10-20-15

SIDEWALK REMOVAL

* Not a bid item

Begin Station	End Station	Area SY	Saw Cut* LF	Remarks
US 67 NB				
1609+38.00	1610+33.00	84.4	16.0	
US 67 SB				
205+99.00	206+94.00	84.4	16.0	
Mississippi	Blvd			
12+50.00	13+10.00	33.3	10.0	
12+60.00	13+20.00	33.3	10.0	

113-1
04-16-13

SIDEWALKS

See MI-220 and S Sheets

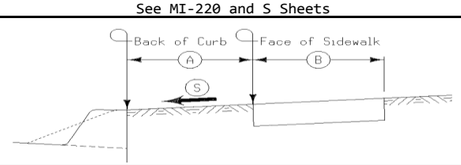

Road Identification	Station to Station		Side	A FT	B FT	S %	4" PCC Sidewalk SY	6" PCC Sidewalk SY	_" PCC Sidewalk SY	Detectable Warnings SF	Remarks
US 67 NB	1609+38.00	1610+33.00	Rt.	6.00	8.00	4.00%	84.4				
US 67 SB	205+99.00	206+94.00	Rt.	6.00	8.00	4.00%	84.4				
Mississippi Blvd	12+50.00	13+10.00	Lt.	6.00	5.00	4.00%	33.3				
Mississippi Blvd	12+60.00	13+20.00	Rt.	6.00	5.00	4.00%	33.3				

POLLUTION PREVENTION PLAN

This Base Pollution Prevention Plan (PPP) includes information on Roles and Responsibilities, Project Site Description, Controls, Maintenance Procedures, Inspection Requirements, Non-Storm Water Controls, Potential Sources of Off Right-of-Way Pollution, and Definitions. This plan references other documents rather than repeating the information contained in the documents. A copy of this Base Pollution Prevention Plan, amended as needed per plan revisions or by contract modification, will be readily available for review.

All contractors shall conduct their operations in a manner that controls pollutants, minimizes erosion, and prevents sediments from entering waters of the state and leaving the highway right-of-way. The prime contractor shall be responsible for compliance and implementation of the PPP for their entire contract. This responsibility shall be further shared with subcontractors whose work is a source of potential pollution as defined in this PPP.

I. ROLES AND RESPONSIBILITES

A. Designer:
1. Prepares Base PPP included in the project plan.
2. Prepares Notice of Intent (NOI) submitted to Iowa DNR.
3. Signature authority on the Base PPP and NOI.

B. Contractor/Subcontractor:
1. Affected contractors/subcontractors are co-permittees with the IDOT and will sign a certification statement adhering to the requirements of the NPDES permit and this PPP plan. All co-permittees are legally required under the Clean Water Act and the Iowa Administrative Code to ensure compliance with the terms and conditions of this PPP.
2. Submit a detailed schedule according to Article 2602 of the Specifications and any additional plan notes.
3. Install and maintain appropriate controls.
4. Supervise and implement good housekeeping practices.
5. Conduct joint required inspections of the site with inspection staff.
6. Signature authority on Co-Permittee Certification Statements and storm water inspection reports.

C. RCE/Inspector:
1. Update PPP whenever there is a change in design, construction, operation or maintenance, which has a significant effect on the discharge of pollutants from the project.
2. Maintain an up-to-date list that identifies contractors and subcontractors as co-permittees.
3. Make these plans available to the DNR upon their request.
4. Conduct joint required inspections of the site with the contractor/subcontractor.
5. Complete an inspection report after each inspection.
6. Signature authority on storm water inspection reports and Notice of Discontinuation (NOD).

II. PROJECT SITE DESCRIPTION

A. This Pollution Prevention Plan (PPP) is for the construction of I-74 from the Mississippi River to north of Lincoln Road.

B. This PPP covers approximately 100 acres with an estimated 52 acres being disturbed. The portion of the PPP covered by this contract has 2 acres disturbed.

C. The PPP is located in an area of one soil association (Kenyon-Floyd-Clyde). The estimated average SCS runoff curve number for this PPP after completion will be 86.

D. Storm Water Site Map - Multiple sources of information comprise the base storm water site map including:
1. Drainage patterns – Plan and Profile sheets and Situation plans.
2. Proposed Slopes – Cross Sections.
3. Areas of Soil Disturbance – construction limits shown on Plan and Profile sheets.
4. Location of Structural Controls – Tabulations on C sheets.
5. Locations of Non-structural Controls – Tabulations on C sheets.
6. Locations of Stabilization Practices – generally within construction limits shown on Plan and Profile sheets.
7. Surface Waters (including wetlands) – Plan and Profile sheets.
8. Locations where storm water is discharged – Plan and Profile sheets.

E. The base site map is amended by contract modifications and progress payments of completed erosion control work.

F. Runoff from this work will flow into the Mississippi River.

III. CONTROLS

A. The contractor's work plan and sequence of operations specified in Article 2602.03 for accomplishment of storm water controls should clearly describe the intended sequence of major activities and for each activity define the control measure and the timing during the construction process that the measure will be implemented.

B. Preserve vegetation in areas not needed for construction.

C. Section 2601 and 2602 of the Standard Specifications define requirements to implement erosion and sediment control measures. Actual quantities used may vary from the Base PPP and amendment of the plan will be documented via fieldbook entries or by contract modification. Additional erosion and sediment control items may be required as determined by the inspector and/or contractor during storm water monitoring inspections. If the work involved is not applicable to any contract items, the work will be paid for according to Article 1109.03 paragraph B.

1. EROSION AND SEDIMENT CONTROLS

a. Stabilization Practices
1) Site plans will ensure that existing vegetation is preserved where attainable and disturbed portions of the site will be stabilized.
2) Stabilization measures shall be initiated as soon as practicable in portions of the site where construction activities have temporarily or permanently ceased.
3) Temporary stabilizing seeding shall be completed as the disturbed areas are constructed. If construction activity is not planned to occur in a disturbed area for at least 21 days, the area shall be stabilized by temporary seeding or mulching within 14 days. Other stabilizing methods shall be used outside the seeding time period.
4) Stabilization measures to be used for this project are located in the Estimated Project Quantities (100-1A) and Estimate Reference Information (100-4A) located on the C sheets of the plan. Additional items may be found in the Inspector's Daily Reports (IDR) or Contract Modifications.

b. Structural Practices
1) Structural practices will be implemented to divert flows from exposed soils and detain or otherwise limit runoff and the discharge of pollutants from exposed areas of the site.
2) Structural items to be used for this project are located in the Estimated Project Quantities (100-1A) and Estimate Reference Information (100-4A) located on the C sheets of the plan, as well as all other item specific Tabulations. Typical drawings detailing construction of the devices to be used on this project can be found on the B sheets of the plan or are referenced in the Standard Road Plans Tabulation.

c. Storm Water Management
1) Measures shall be installed during the construction process to control pollutants in storm water discharges that will occur after construction operations have been completed. The installation of these devices may be subject to Section 404 of the Clean Water Act.

110-12A
Modified

POLLUTION PREVENTION PLAN

2. OTHER CONTROLS

a. Contractor disposal of unused construction materials and construction material wastes shall comply with applicable state and local waste disposal, sanitary sewer, or septic system regulations. In the event of a conflict with other governmental laws, rules and regulations, the more restrictive laws, rules or regulations shall apply.
1) Vehicle Entrances and Exits - Construct and maintain entrances and exits to prevent tracking of sediments onto roadways.
2) Material Delivery, Storage and Use - Implement practices to prevent discharge of construction materials during delivery, storage, and use.
3) Stockpile Management - Install controls to reduce or eliminate pollution of storm water from stockpiles of soil and paving.
4) Waste Disposal - Do not discharge any materials, including building materials, into waters of the state, except as authorized by a Section 404 permit.
5) Spill Prevention and Control - Implement procedures to contain and clean-up spills and prevent material discharges to the storm drain system and waters of the state.
6) Concrete Residuals and Washout Wastes - Designate temporary concrete washout facilities for rinsing out concrete trucks. Provide directions to truck drivers where designated washout facilities are located.
7) Vehicle and Equipment Cleaning - Employ washing practices that prevent contamination of surface and ground water from wash water.
8) Vehicle and Equipment Fueling and Maintenance - Perform on site fueling and maintenance in accordance with all environment laws such as proper storage of onside fuels and proper disposal of used engine oil or other fluids on site.
9) Litter Management - Ensure employees properly dispose of litter.

3. APPROVED STATE OR LOCAL PLANS

During the course of this construction, it is possible that situations will arise where unknown materials will be encountered. When such situations are encountered, they will be handled according to all federal, state, and local regulations in effect at the time.

IV. MAINTENANCE PROCEDURES

The contractor is required to maintain all temporary erosion and sediment control measures in proper working order, including cleaning, repairing, or replacing them throughout the contract period. This shall begin when the features have lost 50% of their capacity.

V. INSPECTION REQUIREMENTS

A. Inspections shall be made jointly by the contractor and the contracting authority at least once every seven calendar days. Storm water monitoring inspections will include:
1. Date of the inspection.
2. Summary of the scope of the inspection.
3. Name and qualifications of the personnel making the inspection.
4. Rainfall amount.
5. Review erosion and sediment control measures within disturbed areas for the effectiveness in preventing impacts to receiving waters.
6. Major observations related to the implementation of the PPP.
7. Identify corrective actions required to maintain or modify erosion and sediment control measures.

B. Include storm water monitoring inspection reports in the Amended PPP. Incorporate any additional erosion and sediment control measures determined as a result of the inspection. Immediately begin corrective actions on all deficiencies found and complete all actions within 3 calendar days of the inspection.

VI. NON-STORM WATER DISCHARGES

This includes subsurface drains (i.e. longitudinal and standard subdrains) and slope drains. The velocity of the discharge from these features may be controlled by the use of patio blocks, Class A stone, erosion stone or other appropriate materials.

VII. POTENTIAL SOURCES OF OFF RIGHT-OF-WAY (ROW) POLLUTION

Silts, sediment, and other forms of pollution may be transported onto highway right-of-way (ROW) as a result of a storm event. Potential sources of pollution located outside highway ROW are beyond the control of this PPP. Pollution within highway ROW will be conveyed and controlled per this PPP.

VIII. DEFINITIONS

A. Base PPP - Initial Pollution Prevention Plan.
B. Amended PPP - May include Plan Revisions or Contract Modifications for new items and fieldbook entries made by the inspector.
C. IDR - Inspector's Daily Report – this contains the inspector's daily diary and item postings.
D. Controls - Methods, practices, or measures to minimize or prevent erosion, control sedimentation, control storm water, or minimize contaminants from other types of waste or materials.
E. Signature Authority - Representative from Designer, Contractor/Subcontractor, or RCE/Inspector authorized to sign various storm water documents.

CERTIFICATION STATEMENT

I certify under penalty of law that this document and all attachments were prepared under my direction or supervision in accordance with a system designed to assure that qualified personnel properly gathered and evaluated the information submitted. Based on my inquiry of the person or persons who manage the system, or those persons directly responsible for gathering the information, the information submitted is, to the best of my knowledge and belief, true, accurate, and complete. I am aware that there are significant penalties for submitting false information, including the possibility of fine and imprisonment for knowing violations.

Consultant Signature	Contracting Authority Signature
Printed or Typed Name	Printed or Typed Name

GPS 014
IOWA D.O.T. FENO MONUMENT
XC=2458338.19 YC=568666.68

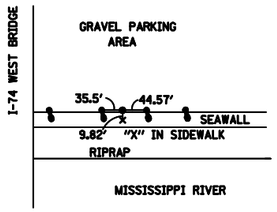

GPS 015
IOWA D.O.T. REBAR
XC=2459345.70 YC= 568727.73

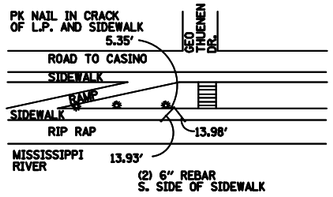

APPROXIMATELY 46' W. OF CENTER LINE OF "GEO THUENEN DR."

CP 119
SET REBAR
XC=2457540.364 YC=570346.488

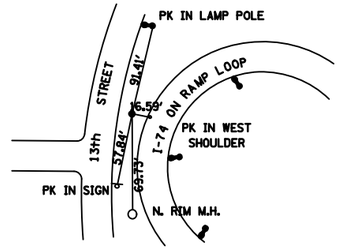

CP 120
SET REBAR
XC=2457691.529 YC=569644.244

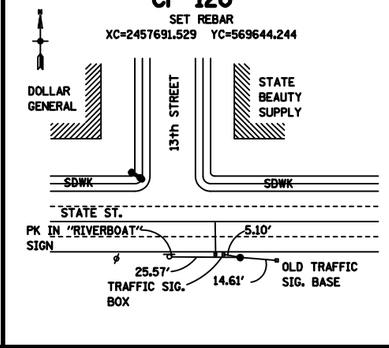

CP 121
SET REBAR
XC=2458219.673 YC=569679.278

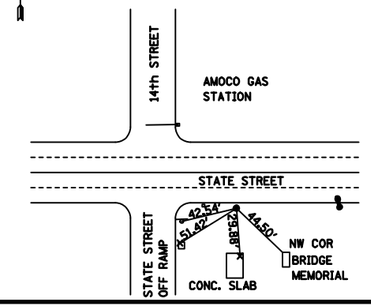

CP 122
SET PK NAIL
XC=2458088.147 YC=570141.496

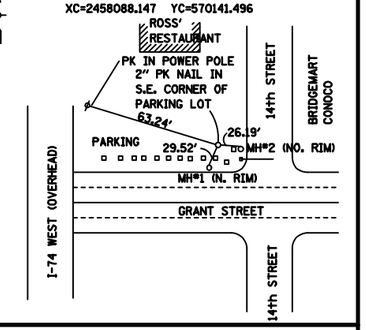

CP 125
SET REBAR
XC=2457651.639 YC=571037.636

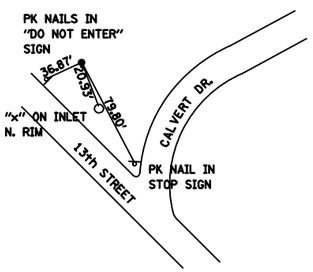

CP 126
SET 2" PK NAIL
XC=2456791.104 YC=569585.544

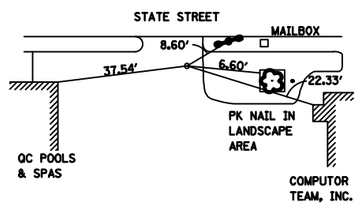

CP 127
SET 2" PK NAIL
XC=2457231.452 YC=569688.750

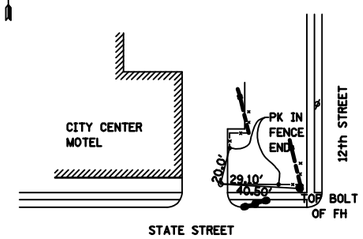

CP 128
SET PK NAIL
XC=2459161.133 YC=569812.022

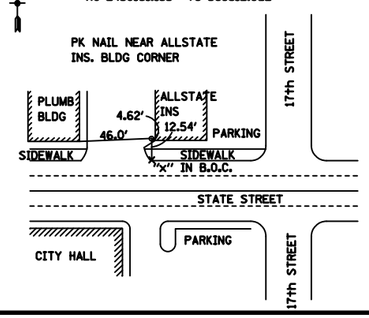

GPS 230
Pt (5/8" Rebar) is on the right corner intersection of Lady Luck Pkwy and Gilbert St. 4.5' back of curb
XC=2458497.62 YC=569456.88

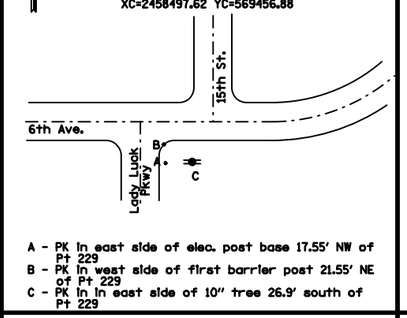

A - PK in east side of elec. post base 17.55' NW of Pt 229
B - PK in west side of first barrier post 21.55' NE of Pt 229
C - PK in in east side of 10" tree 26.9' south of Pt 229

GPS 231
Pt (5/8" Rebar) is in the NW quadrant of State & 16th St. intersection approx 3.5' inside 16th St. curb
XC=2458935.33 YC=569782.48

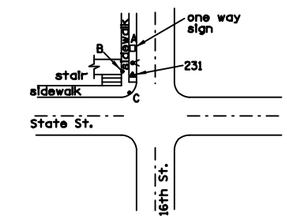

A - PK in east side of one way sign base post 3.85' NW of Pt 231
B - chisled "+" in sidewalk 7.4' west of Pt 231
C - chisled "+" in top of curb 11.8' SE of Pt 231

GPS 232
Pt (5/8" Rebar) is in the SE quadrant of State & Geo. Thuenen (16th St) intersection approx 12' inside Geo. Thuenen Dr. curb
XC=2459398.32 YC=569742.58

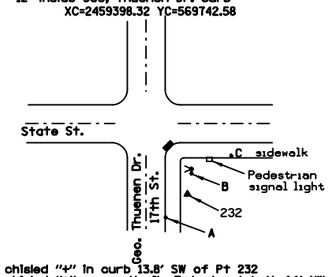

A - chisled "+" in curb 13.8' SW of Pt 232
B - chisled "+" on south fig F. hydrant bolt 4.1' NW of Pt 232
C - chisled "+" in top of inside edge of sidewalk 16.2' NE of Pt 232

GPS 233
Pt is PK in asphalt road in the SW quadrant of State St. & 12th St approx 9.4' inside curb
XC=2457259.09 YC=569614.09

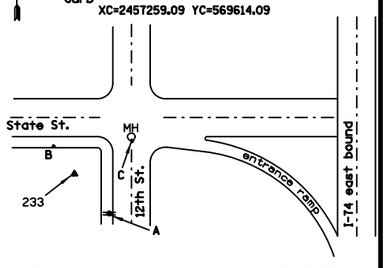

A - PK in west side of power pole base 50.85' SE of Pt 233
B - chisled "+" on edge of sidewalk 14.9' NW of Pt 233
C - chisled "+" in south edge of MH rim (stm mh #8) 29.13' NE of Pt 233

GPS 234
Pt (5/8" Rebar) is on the side of sidewalk in the NW corner of State & 10th St. approx 6.4' inside edge of curb.
XC=2456475.60 YC=569641.39

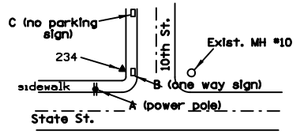

A - PK in power pole 9.5' SW of Pt 234
B - PK in south side of one way post base 5.6' NE of Pt 234
C - chisled "+" in west side of no parking post base 24.0' NE of Pt 234

GPS 235
Pt (5/8" Rebar) is in the SE quadrant of Grant & 10th St intersection approx 4.1' inside curb along 10th St.
XC=2456525.28 YC=570016.89

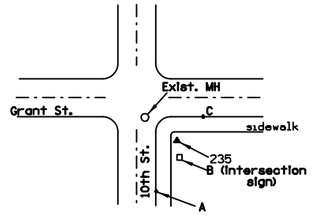

A - chisled "+" in curb 10.85' SW of Pt 235
B - west side of Grant & 10th St. post sign base 2.67' SE of Pt 235
C - chisled "+" in top of curb 8.75' NE of Pt 235

GPS 236
Pt (5/8" Rebar) is in the NW quadrant of Grant & 13th St intersection approx 8.5' NE of traffic light post.
XC=2457483.74 YC=570108.88

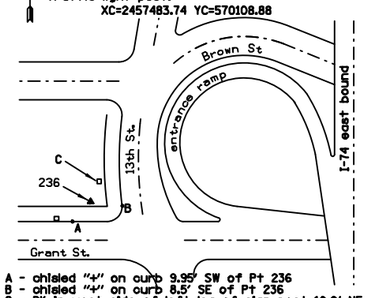

A - chisled "+" on curb 9.95' SW of Pt 236
B - chisled "+" on curb 8.5' SE of Pt 236
C - PK in west side of left leg of sign post 10.0' NE of Pt 236

GPS 237
Pt (5/8" Rebar) is in the NW quadrant of Holmes & 12th St intersection approx 7.5' north of curb along Holmes
XC=2457243.64 YC=570833.83

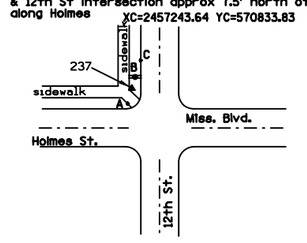

A - "+" in west side of neighborhood watch sign post base 5.88' SE of Pt 237
B - PK in NE side of power pole 4.35' NE of Pt 237
C - "+" in south side of stop sign post base 14.95' NE of Pt 237

GPS 238
Pt (5/8" Rebar)is in the SW quadrant of Miss. Blvd. & Route 6 (Kimberly Road) approx 3.7' from inside curb edge along Miss. Blvd
XC=2458079.87 YC=570821.36

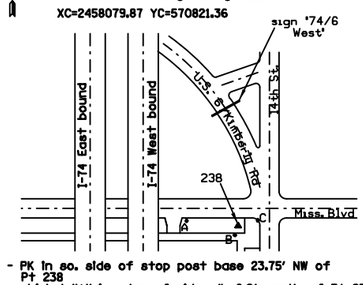

A - PK in so. side of stop post base 23.75' NW of Pt 238
B - chisled "+" in edge of sidewalk 6.2' south of Pt 238
C - chisled "+" on curb 6.4' east of Pt 238

DATUM INFORMATION

THE DATUM PLANE FOR THIS SURVEY IS RELATIVE TO N.A.V.D. 88 DATUM. IN IOWA BENCHES WERE RUN FROM NGS BENCHMARK "DAVENPORT" TO NGS BENCHMARK "F 70 RESET". IN ILLINOIS A BENCH CHECK WAS RUN FROM NGS BENCHMARK "W 52" TO NGS BENCHMARK "Z 52", THEN DATUM WAS CARRIED SOUTH TO THE END OF PROJECT.

ALL CONTROL POINT COORDINATES SHOWN ARE LOCAL PROJECT PLANE (GROUND) COORDINATES.
CONVERSION EQUATION GRID TO GROUND: GROUND COORD = (STATE PLANE - HOLD POINT) 1/GRID FACTOR + HOLD POINT
CONVERSION EQUATION GROUND TO GRID: GRID COORD = (GROUND - HOLD POINT) GRID FACTOR + HOLD POINT

HOLD POINT = G021	NORTH	EAST	GRID FACTOR	1/GRID FACTOR
	580322.54	2455353.37	0.999936506	1.000063498

BENCH MARKS

IOWA BENCHMARKS:

			ELEVATION	NORTHING	EASTING	STATION	OFFSET
No. 500	Sta.	CHISELED "X" IN BOLT E. SIDE CONC. STRUCTURE----------	575.797	N 568688.8797	E 2458216.7809	6781+18.92	161.19' LT.
No. 501	Sta.	CHISELED "X" IN S.W. FLANGE BOLT IN FHYD----------	568.923	N 569456.8395	E 2458524.4416	6787+97.99	311.34' RT.
No. 502	Sta.	CHISELED "X" IN FLANGE BOLT IN WORD "MUELLER" FHYD---	575.247	N 569737.4808	E 2458179.1280	6791+49.11	38.00' RT.
No. 503	Sta.	CHISELED "X" IN FLANGE BOLT IN WORD "MUELLER" FHYD---	580.282	N 570811.0288	E 2458144.2367	6801+93.58	255.44' RT.

LICENSED LAND SURVEYOR — COVENTINE FIDIS NO. 9174 — IOWA

I hereby certify that this plan was prepared by me or under my direct personal supervision and that I am a duly licensed Land Surveyor under the laws of the State of Iowa.

COVENTINE FIDIS DATE:
License number 09174
My license renewal date is December, 2016
Pages or sheets covered by this seal: G.1

ENGLISH	IOWA DOT	DESIGN TEAM	AMERICAN SURVEYING	SCOTT COUNTY	PROJECT NUMBER	BRFIM-074-1(200)5--05-82	SHEET NUMBER G.1

Survey Information

Scott County
IM-074-1(162)2--13-82
I-74 From South of Lincoln Rd to North of 67th Street
Pin 03-82-074-010-04
SAP 0337.4

General Information

This survey is in English Units. The purpose of this survey was to re-observe and re-level all control. All Bench Marks on the Iowa side of the Mississippi River were re-leveled. All control on the Iowa side of the Mississippi River North of CP123 was re-observed. One new GPS calibration was generated using re-observed control, new supplemental project control, and re-leveled benchmarks along existing I-74. The purpose of this survey was to update old information, confirm the accuracy of old information then collect and verify information along I-74.

The IDOT GPS network control along I-74 was held fixed in the RTK calibration.
Calibration points held fixed Horizontally and Vertically 5,6,10,17,20,25,100,101,102,103,111,153,243,560,612,
Calibration points held fixed Vertically 7,21,106,108,109,110,116,157,250,252,254,255,556,563
Calibration points held fixed Horizontally 12, 13,15.

The project coordinates are projected to the ground.

Vertical Datum

This survey is relative to NAVD 88 vertical datum. A new level loop originated and terminated on the original I-74 mark BM 503. The new level loop ran north to I-80 then returned to BM 503. Loops were also run on Lincoln, Middle road, Spruce Hills & 53rd Street.

Benchmarks were re-established on the new Lincoln Rd overpass bridge. Vertical differences between the 2003 CH2MHill marks and the newly established elevations are as follows, At the Middle Road intersection a vertical difference of 0.062 was found (SEE BM509 equation below). At the Spruce Hills intersection a vertical difference of 0.078 was found (SEE BM514 equation below). All elevations along 53rd street were originally leveled from BM 522, BM 522 has been destroyed in recent construction. Just West of the 53rd Street intersection a vertical difference of 0.066 was found (SEE BM560 equation below).

Vertical Equations;

BM # 503 this survey	Elev. = 580.282	(NAVD 88 English) 2011 Datum BM
=BM # 503	Elev. = 580.282	(NAVD 88 English) I-74 Consultant survey
BM # 509 this survey	Elev. = 677.516	(NAVD 88 English) 2011 Re-Leveled
=BM # 509	Elev. = 677.578	(NAVD 88 English) I-74 Consultant survey
BM # 514 this survey	Elev. = 680.944	(NAVD 88 English) 2011 Re-Leveled
=BM # 514	Elev. = 681.022	(NAVD 88 English) I-74 Consultant survey
=BM # 514	Elev. = 681.022	(NAVD 88 English) 2009 WHKS Kimberly Road Survey
BM # 560 this survey	Elev. = 686.934	(NAVD 88 English) 2011 Re-Leveled
=BM # 560	Elev. = 687.000	(NAVD 88 English) 2008 WHKS 53rd St Survey
BM # 564 this survey	Elev. = 710.632	(NAVD 88 English) 2011 Re-Leveled
=BM # 564	Elev. = 710.688	(NAVD 88 English) 2008 WHKS 53rd St Survey
BM # 556 this survey	Elev. = 707.691	(NAVD 88 English) 2011 Re-Leveled
=BM # 556	Elev. = 707.745	(NAVD 88 English) 2008 WHKS 53rd St Survey
BM # 573 this survey	Elev. = 624.321	(NAVD 88 English) 2011 Re-Leveled
=BM # 317 Scott Co Plan (I-74-1(5)2**01--82	Elev. = 625.21	Datum Unknown
BM # 574 this survey	Elev. = 649.518	(NAVD 88 English) 2011 Re-Leveled
=BM 320"A" Scott Co Plan (I-74-1(5)2--01--82	Elev. = 649.36	Datum Unknown
BM # 575 this survey	Elev. = 653.550	(NAVD 88 English) 2011 Re-Leveled
=BM 423"A" Scott Co Plan (I-74-1(5)2--01--82	Elev. = 654.42	Datum Unknown
BM # 576 this survey	Elev. = 646.600	(NAVD 88 English) 2011 Re-Leveled
=BM 328"A" Scott Co Plan (I-74-1(6)3**01-82	Elev. = 647.61	Datum Unknown

Alignments

Alignments were provided from previous surveys.

Horizontal Datum & Project Coordinate Transformation

The IDOT observed a GPS Static control network for the I-74 Mississippi River Bridge.

GENERAL INFORMATION FOR GPS PROJECT : Sap 0337 IMN-74-1(123)0-0e-82

STATE PLANE COORDINATE ZONE 1402 (IOWA SOUTH LAMBERT)

STATE PLANE COORDINATES HELD AT POINT G021

AVERAGE PROJECT LATITUDE = 41 33 2.13112

RESULTING RADIUS = 6363530.832 (METERS)

MEAN PROJECT ELEVATION = 195.000 (METERS)

SEA LEVEL FACTOR = 0.999969358

AVERAGE PROJECT SCALE FACTOR = 0.999967147

COMBINED FACTOR (GRID) = 0.999936506

1 / GRID = 1.000063498

VERTICAL DATUM = NAVD 88 <> HORIZONTAL DATUM = NAD 83 (1996)

Local Project Plane Coordinate Conversion Equation:
a. Local Project Coord y = [(State Plane y - hold point y) 1/grid factor] + hold point y
b. Local Project Coord x = [(State Plane x - hold point x) 1/grid factor] + hold point x

ALL COORDINATES CONVERTED TO ENGLISH UNITS

POINT	STATE PLANE COORD(Y)	STATE PLANE COORD(X)	POINT SCALE FACTOR	LOCAL PROJECT PLANE COORD(Y)	LOCAL PROJECT PLANE COORD(X)	Leveled Elevation
2	575101.117	2456247.982	0.99996155	575100.785	2456248.039	671.710
3	575305.685	2456670.142	0.99995733	575305.366	2456670.226	677.231
4	587761.953	2454890.061	0.99995075	587762.425	2454890.032	699.736
5	579548.598	2465909.733	0.99996337	579548.549	2465910.403	-------
6	592312.279	2465381.409	0.99996316	592313.040	2465382.046	-------
7	570852.050	2449647.188	0.99996322	570851.449	2449646.826	-------
10	566360.220	2467519.750	0.99996337	566359.333	2467520.523	-------
11	565294.190	2460631.000	0.99996316	565293.236	2460631.335	-------
12	564685.560	2459258.240	0.99996301	564684.567	2459258.488	-------
13	565480.250	2459044.560	0.99996322	565479.308	2459044.794	-------
14	568667.420	2458338.000	0.99996407	568666.680	2458338.190	575.724
15	568728.460	2459345.450	0.99996408	568727.724	2459345.703	576.878
16	571682.620	2457637.330	0.99996489	571682.071	2457637.475	625.186
17	572958.520	2457220.200	0.99996525	572958.052	2457220.319	658.505
Original Cp 18 has been destroyed			----------	----------	----------	-------
19	576053.260	2456566.470	0.99996613	576052.989	2456566.547	659.900
20	577880.740	2455743.660	0.99996666	577880.585	2455743.685	626.865
21	580322.540	2455353.370	0.99996738	580322.540	2455353.370	677.568
22	582952.070	2455193.020	0.99996817	582952.237	2455193.010	688.928
Original Cp 23 has been destroyed			----------	----------	----------	-------
24	590858.430	2455023.020	0.99997062	590859.099	2455022.999	727.114
25	593042.580	2454447.940	0.99997133	593043.388	2454447.883	748.901
26	595178.440	2454058.310	0.99997203	595179.383	2454058.228	732.221

BENCHMARKS		ELEVATION	
~~No. 500 Sta. 6781+18.803 161.128 Lt. Y: 568688.781 X:2458216.869~~	Fd "X" on bolt East side conc structure =CH2MHill BM500 EL=575.797	~~575.796~~	Barrier Rail (New BM on new Brg Addition) 708.439
~~No. 501 Sta. 6787+97.906 311.471 Rt. Y: 569456.791 X:2458524.591~~	Fd CHISELED "X" IN S.W. FLANGE BOLT IN Fire Hyd (FD Good Cond) =CH2MHill BM501 EL 568.923	~~568.926~~	SW Barrier Rail of SBL Brg over Middle Rd 683.959
~~No. 502 Sta. 6791+49.022 38.344 Rt. Y: 569737.468 X:2458179.480~~	FD CHISELED "X" IN FLANGE BOLT IN WORD "MUELLER" FHYD (Leaning) =CH2MHill BM502 EL 575.247	~~575.247~~	SW Barrier Rail of SBL Brg over Duck Creek 638.686
~~No. 503 Sta. 6801+93.632 255.412 Rt. Y: 570811.071 X:2458144.197~~	FD CHISELED "X" IN FLANGE BOLT IN WORD "MUELLER" FHYD (Leaning) =CH2MHill BM503 EL 580.282	580.282	fire hyd Jct Hawthorne Dr & Cypress Drive =Plan BM 317 Plan Elev=625.21 (I-74-1(5)2**01--82 Fd on sheet 4 of 8 624.321
No. 504 Sta. 6809+00.595 189.731 Rt. Y: 571477.720 X:2457880.301	Fd "X" IN West side conc Luminaire Base =CH2MHill BM504 EL 602.945	602.920	of Fire Hyd Plan Elev =649.36 =Plan BM 320"A" (I-74-1(5)2--01--82 Fd on sheet 47A 649.518
No. 505 Sta. 6810+90.128 75.269 Rt. Y: 571625.939 X:2457715.814	Fd Square on NE Barrier Rail of NBL I-74 Bridge over Kimberly Rd =CH2MHill BM505 EL 621.93	621.906	Hdwl 4x4 RCB Plan Elev =654.42 =Plan BM 423"A" (I-74-1(5)2--01--82 Fd on sheet 47A 653.550
No. 506 Sta. 6822+67.473 84.778 Rt. Y: 572755.496 X:2457383.651	Fd "X" on West side Cir conc Lum Pole Base =CH2MHill BM506 EL 655.749	655.710	Plan calls for IHC This Survey Fd "X" on Inlet end 6x6 RCB Plan Plan Elev=647.61 (I-74-1(6)3**01-82 Fd on sheet 30 646.600
~~No. 507 Sta. 6834+05.076 68.762 Rt. Y: 573843.513 X:2457063.995~~	Not Found at given coordinates presumed destroyed CH2M Hill BM	~~668.133~~	Barrier Rail of New bridge on Lincoln 688.859
No. 508 Sta. 6842+55.549 62.831 Rt. Y: 574668.276 X:2456866.038	Fd "X" on East side conc Lum Pole Base =CH2MHill BM508 EL 671.518	671.448	Barrier Rail of New bridge on Lincoln 689.703
No. 509 Sta. 6851+85.690 59.105 Rt. Y: 575576.663 X:2456666.015	Fd IDOT BM Button on NE Barrier Rail of NBL Brg over Middle Rd =CH2MHill BM509 EL 677.578	677.516	Cond) equals SAP 0576 BM601 ZC=657.159-- 657.067
No. 510 Sta. 6861+43.895 80.14 Rt. Y: 576518.994 X:2456482.513	Fd "X" on E Side conc Luminaire Base at AB Sta 2170+00+/- =CH2MHill BM510 EL 645.087	645.044	
No. 511 Sta. 6868+67.531 100.64 Rt. Y: 577225.907 X:2456261.874	Fd DOT BM Button on NE Barrier Rail of NBL Brg over Duck Creek =CH2MHill BM511 EL 638.647	638.614	
No. 512 Sta. 6882+39.229 73.974 Rt. Y: 578444.501 X:2455659.981	Fd "X" on Conc Base of W post of sign "exit 2" =CH2MHill BM512 EL 631.703	631.676	
No. 513 Sta. 6892+34.511 84.403 Rt. Y: 579410.375 X:2455508.787	Fd "X" on top east end 48" RCP =CH2MHill BM513 EL 649.572 125' +/- N. of MM 3.1	649.537	
No. 514 Sta. 6901+57.825 60.026 Rt. Y: 580327.480 X:2455399.144	Fd DOT BM Button on SE Barrier Rail of NBL Brg over Spruce Hills Rd =CH2MHill BM514 EL 781.022	680.944	RCB equals SAP 0576 BM505 ZC=632.189----- 632.115
No. 515 Sta. 6912+23.757 330.731 Rt. Y: 581413.875 X:2455570.133	Fd CHISELED "X" IN FLANGE BOLT IN WORD "MUELLER" =CH2MHill BM515 EL 683.991	683.924	equals SAP 0576 BM506 equals ZC=634.892--634.811
No. 516 Sta. 6923+17.968 89.277 Lt. Y: 582468.666 X:2455061.538	Fd "X" on E side conc Lum Pole Base =CH2MHill BM516 EL 686.241	686.161	Cond) equals SAP 0576 BM601 ZC=637.567---637.475
No. 518 Sta. 6934+40.127 101.985 Rt. Y: 583597.470 X:2455218.010	Fd "T" IN HDWL R.C.B. 2' from WHKS BM (#16589 Fd IHC inlet hdwl 4x5x175.9RCB)	668.280	
~~No. 519 Sta. 6946+33.160 100.75 Lt. Y: 584785.834 X:2454989.491~~	Not Found at given coordinates presumed destroyed CH2M Hill BM	~~667.743~~	Cond) equals SAP 0576 BM601 ZC=657.159---657.067
No. 520 Sta. 6956+41.991 87.183 Rt. Y: 585798.497 X:2455155.537	Fd "X" in Sign Base =CH2MHill BM520 EL 746.765	646.698	Hdwl 4x4 RCB Plan Elev =654.42 =Plan BM 423"A" (I-74-1(5)2--01--82 Fd on sheet 47A 653.550
No. 521 Sta. 6963+09.707 63.203 Rt. Y: 586465.537 X:2455117.105	Fd "X" on Lum Base =CH2MHill BM521 EL 660.130	660.059	
~~No. 522 Sta. 6974+87.011 80.483 Rt. Y: 587642.940 X:2455108.891~~	Not Found at given coordinates presumed destroyed CH2M Hill BM	~~679.620~~	
No. 523 Sta. 6988+24.965 63.13 Rt. Y: 588980.204 X:2455062.572	Fd "X" on Lum Base =CH2MHill BM523 EL 700.669	700.594	
No. 524 Sta. 7000+10.296 63.463 Rt. Y: 590165.265 X:2455037.241	Fd "X" on Lum Base =CH2MHill BM524 EL 719.358	719.265	disk (Good Cond)-Previous El=707.745 707.691
No. 525 Sta. 7010+07.602 91.313 Lt. Y: 591158.986 X:2454860.908	Fd "X" in Sign Base =CH2MHill BM525 EL 727.605	727.494	Wendys -Previous El=700.401 700.342
No. 526 Sta. 7019+95.564 98.784 Lt. Y: 592123.621 X:2454768.643	FD "X" on east side sign base =CH2MHill BM526 EL 731.873	731.766	697.643
No. 527 Sta. 7033+00.191 150.317 Rt. Y: 593441.396 X:2454656.773	Fd RR Spk in w. side fence post =CH2MHill BM527 EL 738.163	738.026	Quad 53rd & SBL on Ramp to I-74 Previous El=687.000 686.934
No. 528 Sta. 7039+00.326 82.286 Rt. Y: 593998.080 X:2454422.481	Fd "X" in Sign Base =CH2MHill BM528 EL 733.087	732.973	Previous El=710.688 710.632
No. 529 Sta. 7028+71.801 105.188 Rt. Y: 593017.636 X:2454734.117	Fd IHC BM on SE Cor 67th St. Bridge =CH2MHill BM529 EL 751.48	751.346	714.865
~~No. 533 Sta. 6975+42.730 2347.104 Rt. Y: 587747.722 X:2457373.774~~	Not Found at given coordinates presumed destroyed CH2M Hill BM City of Davenport B.M. BRASS Monu	~~711.250~~	Previous El=710.934 710.882 707.513
No. 556 Sta. 6975+74.064 2934.409 Lt. Y: 587664.694 X:2452092.820	Fd City of Davenport conc pad with disk (Good Cond)-Previous El=707.745	707.691	
~~No. 558 Sta. 6976+23.550 1683.44 Lt. Y: 587741.254 X:2453342.425~~	Not Found at given coordinates presumed destroyed BM from 53rd St Survey	~~709.391~~	
No. 564 Sta. 6976+24.653 431.761 Rt. Y: 587788.155 X:2455457.106	Fd "X" on S side Lum Pole Base	710.632	
No. 565 Sta. 6934+41.901 101.993 Rt. Y: 583599.244 X:2455217.979	Fd IHC BM on inlet hdwl 4x5x175.9 RCB Note:This BM is 2' from CH2MHill #518	668.319	2007 Rd Survey ZC=680.814)=(BM612 2009 Kimberly Rd Survey ZC=680.884) 680.800
No. 568 Sta. 6976+08.417 131.511 Rt. Y: 587765.422 X:2455157.278	Fd IDOT Brass Button on NE BRG/SWK Barrier Rail	708.326	access lid approx 500' NE of station "Davenport" the swk is along west side of Perry Street just north of E 4th St. 584.737
No. 569 Sta. 6976+03.140 118.937 Lt. Y: 587754.724 X:2454907.003	Fd IDOT Brass Button on NW BRG/SWK Barrier Rail	703.120	

C.P. STA 6805+63.73 RIGHT 341.97
C.P. 123, Fd 5/8" Rebar Flush
N=571198.304 E=2458123.906

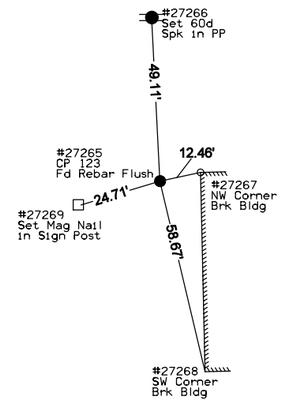

C.P. STA 6806+98.00 RIGHT 238.05
C.P. 239, Fd 5/8" Rebar 4" Deep
N=571297.829 E=2457985.270

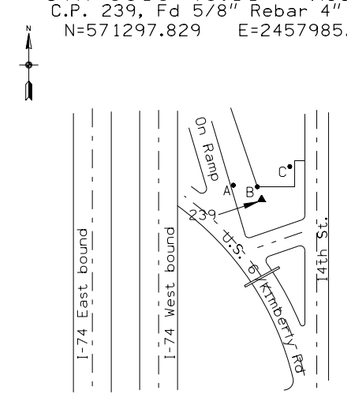

A - chisled "+" in NE sec. of elec. pole base support 30.14' NW of Pt. 239
B - chisled "+" in west side of fence post support 4.7' NW of Pt 239
C - PK in asphalt paving 17.87' NE of Pt 239

C.P. STA 6811+66.56 RIGHT 16.56
C.P. 16, Fd 5/8" Rebar 6" Deep
N=571682.071 E=2457637.475

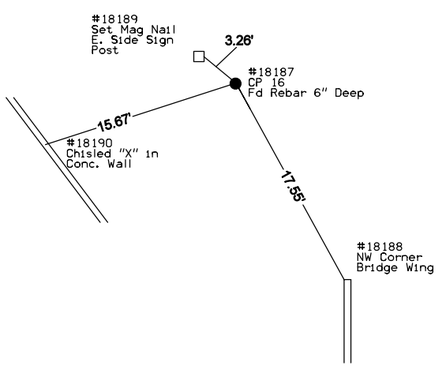

C.P. STA 6813+84.75 LEFT 284.22
C.P. 240, Fd 5/8" Rebar 2" Deep
N=571803.709 E=2457286.364

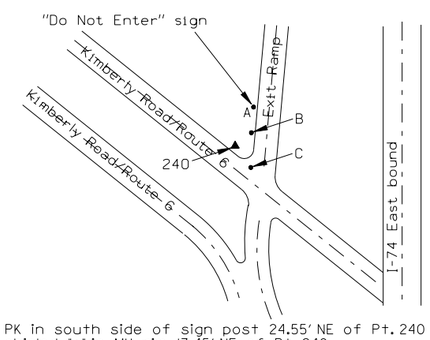

A - PK in south side of sign post 24.55' NE of Pt. 240
B - chisled "+" in MH rim 17.45' NE of Pt. 240
C - chisled "+" in MH rim 13.82' SE of Pt 240

C.P. STA 6813+87.86 LEFT 283.53
C.P. 124, Fd 5/8" Rebar 2" Deep
N=571806.885 E=2457286.125

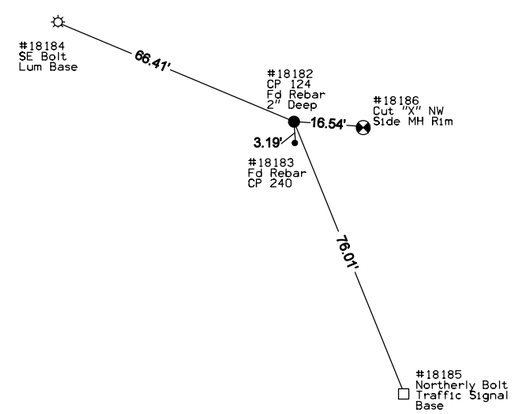

C.P. STA 6815+94.35 LEFT 6.56
C.P. 118, Fd 5/8" Rebar 2" Deep
N=572084.791 E=2457491.344

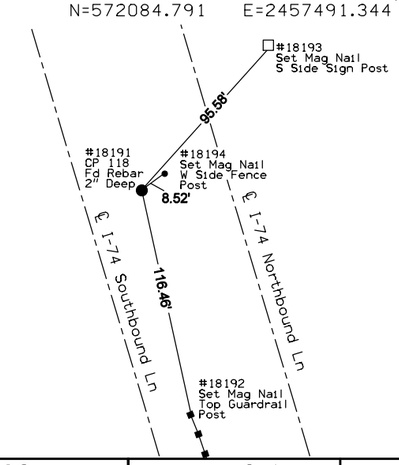

ENGLISH	IOWA DOT	DESIGN TEAM **WHKS & Co.**	**SCOTT** COUNTY	PROJECT NUMBER **BRFIM-074-1(200)5--05-82**	SHEET NUMBER **G.4**

C.P. STA 6817+24.44 LEFT 676.03
C.P. 241, Fd 5/8" Rebar 4" Deep
N=572015.245 E=2456812.909

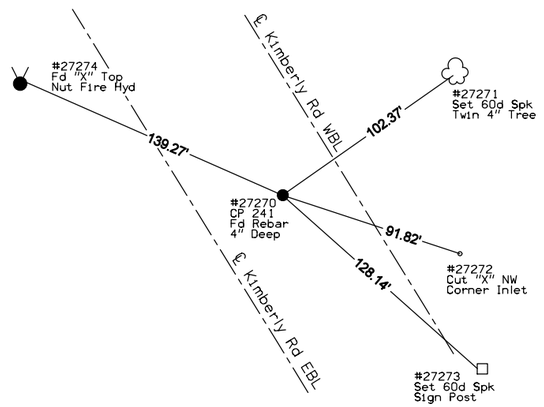

C.P. STA 6822+23.18 LEFT 63.92
C.P. 242, Fd 5/8" Rebar 3" Deep
N=572670.004 E=2457254.178

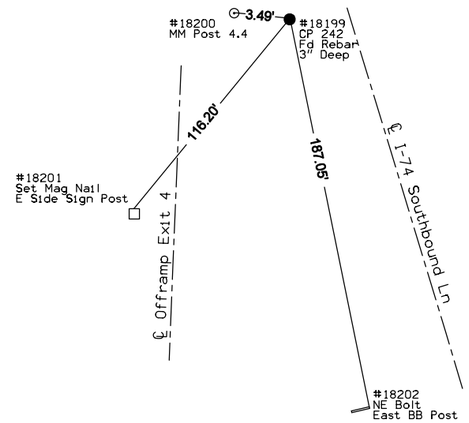

C.P. STA 6825+08.57 LEFT 13.59
C.P. 17, Fd 5/8" Rebar 6" Deep
N=572958.052 E=2457220.319

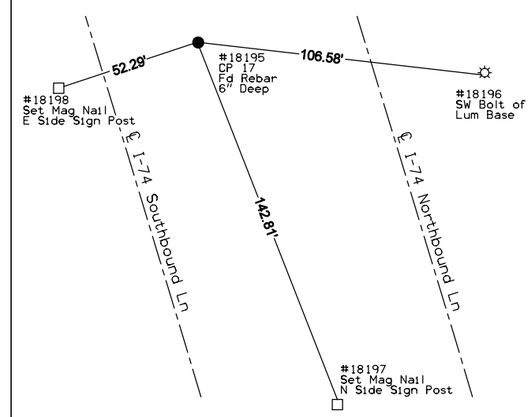

C.P. STA 6830+52.74 RIGHT 84.80
C.P. 243, Fd 5/8" Rebar Flush
N=573507.713 E=2457167.961

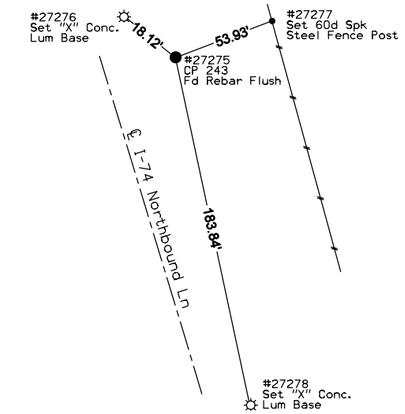

C.P. STA 6830+82.30 RIGHT 71.66
C.P. 117, Fd 5/8" Rebar Flush
N=573532.773 E=2457147.651

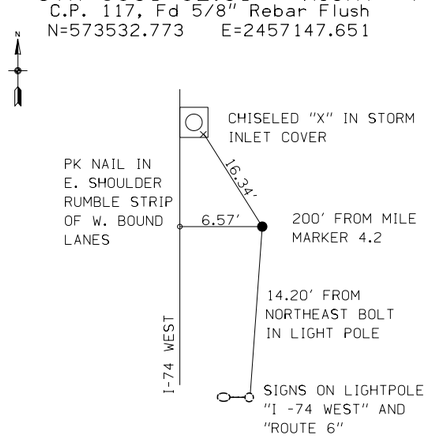

C.P. STA 6833+38.33 RIGHT 663.55
C.P. 245, Fd 5/8" Rebar Flush
N=573926.083 E=2457656.676

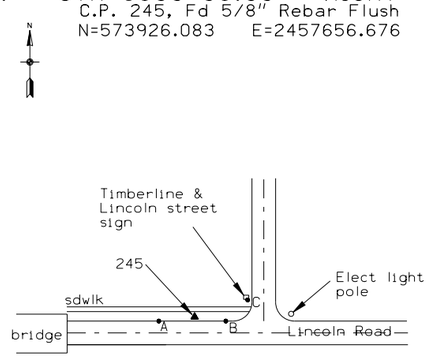

A - chisled "+" in top of curb 12.65' SW of Pt 245
B - chisled "+" in top of curb 6.77' SE of Pt 245
C - chisled "+" on sign support base 11.91' NE of Pt 245

C.P. STA 6835+44.52 LEFT 618.90
C.P. 244, Fd 5/8" Rebar 1" Deep
N=573814.369 E=2456362.609

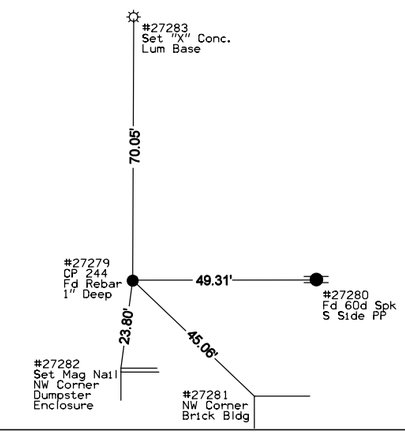

C.P. STA 6838+12.17 LEFT 8.42
C.P. 116, Fd 5/8" Rebar 4" Deep
N=574220.393 E=2456893.100

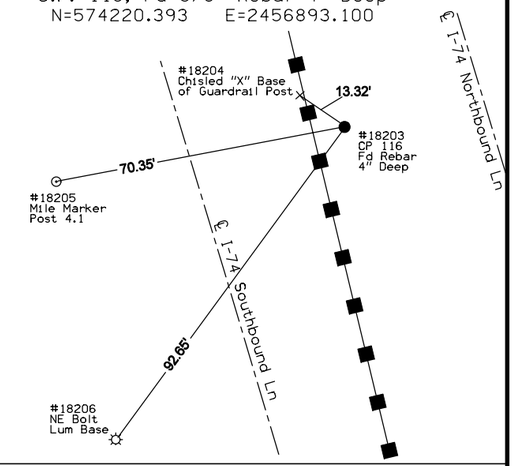

C.P. STA 6841+97.00 LEFT 102.14
C.P. 246, Fd 5/8" Rebar Flush
N=574576.214 E=2456717.144

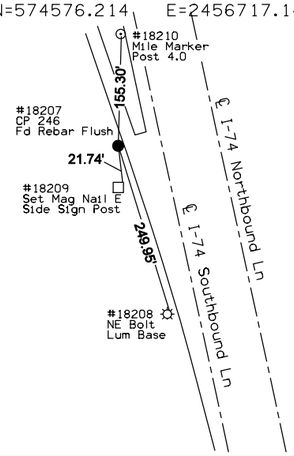

C.P. STA 6843+81.85 LEFT 829.78
C.P. 247, Fd 5/8" Rebar Flush
N=574603.267 E=2455966.880

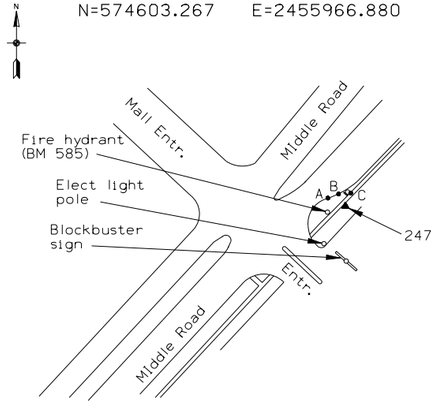

A - chisled "+" on top of curb 23.27' NW of Pt. 247
B - chisled "+" on top of curb 17.75' North of Pt. 247
C - PK in light pole base 37.42' NE of Pt 247

C.P. STA 6845+55.04 LEFT 586.64
C.P. 156, Fd "X" On Sidewalk
N=574823.895 E=2456167.973

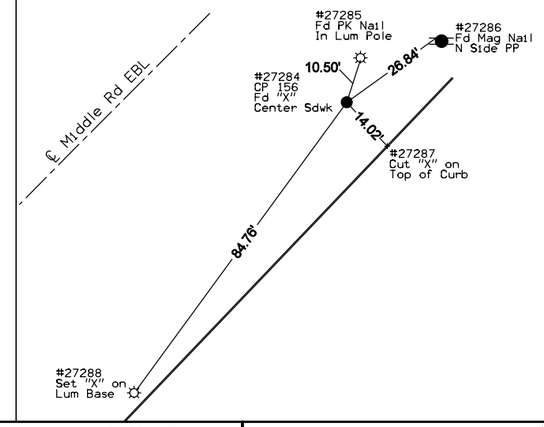

C.P. STA 6849+55.35 LEFT 237.03
C.P. 248, Fd 5/8" Rebar 6" Deep
N=575288.988 E=2456425.184

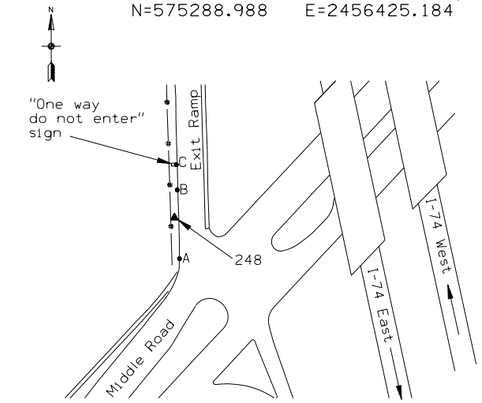

A - chisled "+" on top of curb 6.27' SE of Pt. 248
B - PK in asphalt shoulder 10.48' NE of Pt. 248
C - PK in sign post base 14.19' NW of Pt 248

ENGLISH	IOWA DOT	DESIGN TEAM WHKS & Co.	SCOTT COUNTY	PROJECT NUMBER BRFIM-074-1(200)5--05-82	SHEET NUMBER G.5

C.P. STA 6852+04.74 RIGHT 330.09
C.P. 249, Fd 5/8" Rebar 2" Deep
N=575652.495 E=2456926.865

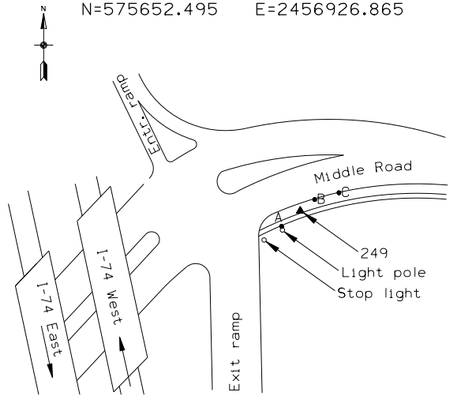

A - PK in light pole support base 16.23' SW of Pt. 249
B - chisled '+' on top of curb 6.0' NE of Pt. 249
C - chisled '+' on top of curb 10.45' NE of Pt 249

C.P. STA 6853+49.60 RIGHT 340.81
C.P. 157, Fd "X" On Sidewalk
N=575796.351 E=2456906.764

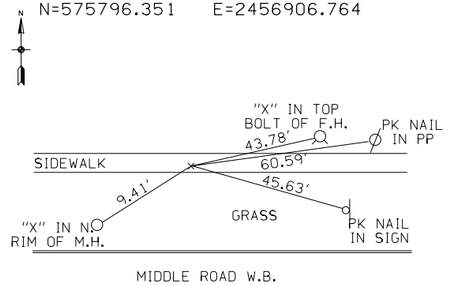

"X" CUT IN SIDEWALK
NORTH OF MIDDLE RD.
EAST OF I-74 SOUTH OF
CHURCH PARKING LOT

C.P. STA 6855+70.34 RIGHT 980.42
C.P. 257, Fd 5/8" Rebar Flush
N=576147.162 E=2457485.347

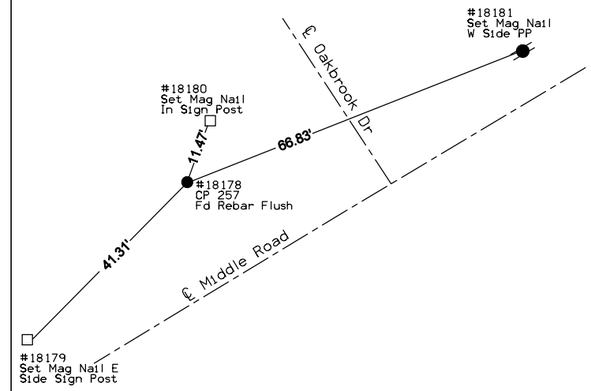

C.P. STA 6856+35.60 RIGHT 1511.93
C.P. 158, Fd "X" On Sidewalk
N=3683161.585 E=5206985.095

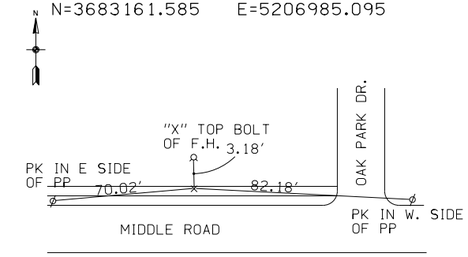

"X" CUT IN SIDEWALK
NORTH OF MIDDLE RD.

C.P. STA 6856+72.28 RIGHT 62.45
C.P. 19, Fd 5/8" Rebar Flush
N=576052.989 E=2456566.547

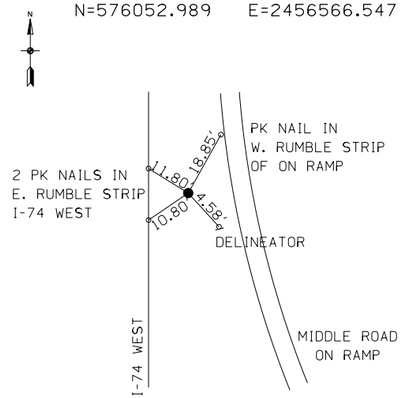

APPROXIMATELY 150' S.
OF MILE MARKER 3.7

C.P. STA 6860+71.06 LEFT 8.34
C.P. 115, Fd 5/8" Rebar Flush
N=576427.673 E=2456412.785

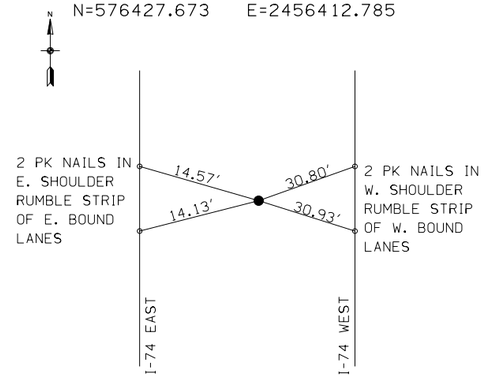

APPROXIMATELY 150' NORTH OF MILE
MARKER 3.7 NEAR EXIT 3 OFF RAMP

C.P. STA 6870+26.49 RIGHT 49.15
C.P. 250, Fd 5/8" Rebar 5" Deep
N=577349.320 E=2456144.644

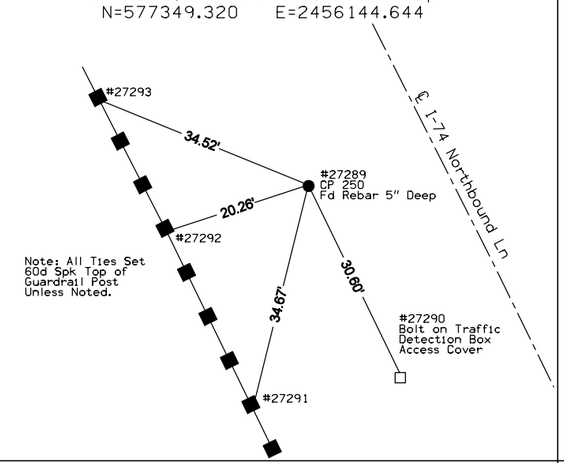

C.P. STA 6870+47.07 RIGHT 33.17
C.P. 114, Fd 5/8" Rebar 6" Deep
N=577360.454 E=2456120.905

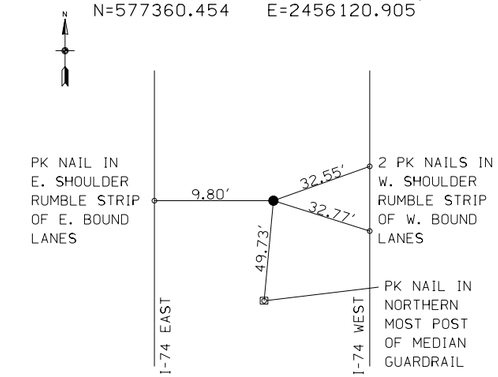

APPROXIMATELY 35' NORTH
OF MILE MARKER 3.5

C.P. STA 6876+81.07 LEFT 52.62
C.P. 20, Fd 5/8" Rebar 4" Deep
N=577880.585 E=2455743.685

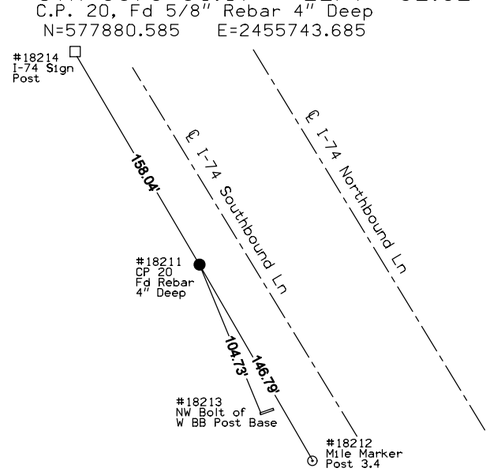

C.P. STA 6890+20.99 RIGHT 78.88
C.P. 251, Fd 5/8" Rebar 4" Deep
N=579197.558 E=2455523.116

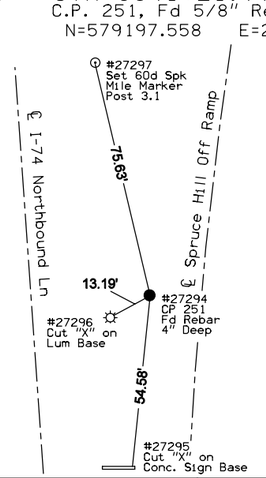

C.P. STA 6891+37.42 LEFT 11.03
C.P. 112, Fd 5/8" Rebar Flush
N=579304.873 E=2455422.742

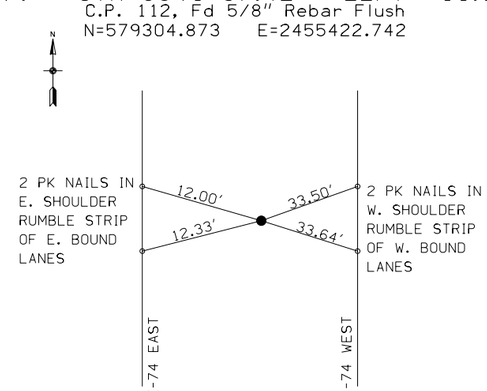

SOUTH OF KIMBERLY ROAD
ON RAMP TERMINALS I-74 E.

C.P. STA 6901+57.14 RIGHT 13.99
C.P. 21, Fd 5/8" Rebar 6" Deep
N=580322.540 E=2455353.370

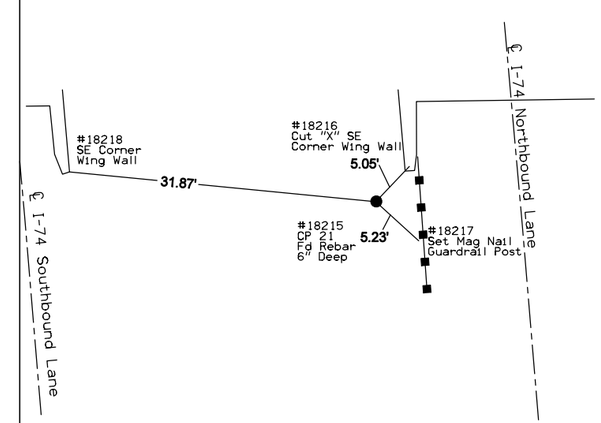

ENGLISH	IOWA DOT	DESIGN TEAM WHKS & Co.	SCOTT COUNTY	PROJECT NUMBER BRFIM-074-1(200)5--05-82	SHEET NUMBER G.6

C.P. STA 6903+79.03 LEFT 1328.13
C.P. 153, Fd 5/8" Rebar W/ Alum. Cap 6" Deep
N=580419.391 E=2453996.482

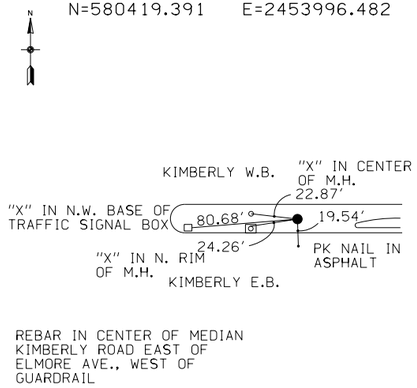

C.P. STA 6908+96.34 LEFT 10.08
C.P. 111, Fd 5/8" Rebar Flush
N=581056.349 E=2455261.055

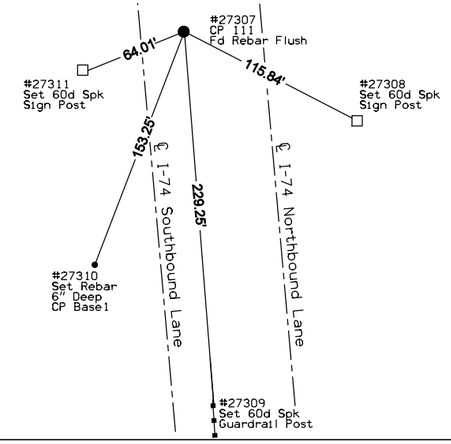

C.P. STA 6911+61.86 RIGHT 159.71
C.P. 254, Fd 5/8" Rebar 4" Deep
N=581336.428 E=2455405.564

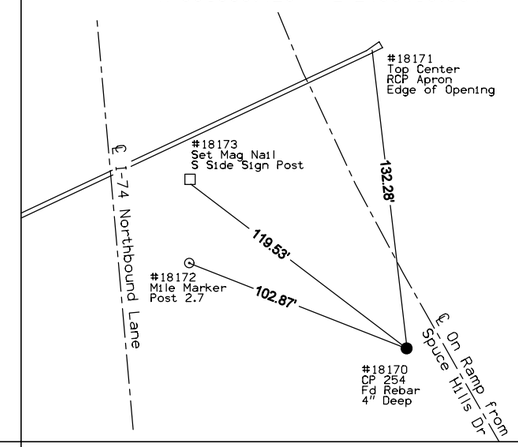

C.P. STA 6918+58.74 LEFT 13.12
C.P. 110, Fd 5/8" Rebar Flush
N=582014.527 E=2455169.727

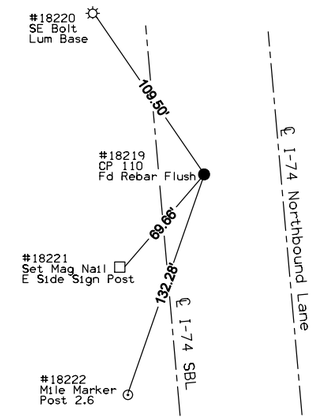

C.P. STA 6920+29.49 LEFT 72.47
C.P. 255, Fd 5/8" Rebar 4" Deep
N=582180.524 E=2455097.140

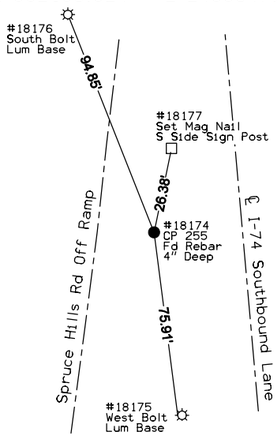

C.P. STA 6927+95.16 RIGHT 62.63
C.P. 22, Fd 5/8" Rebar 6" Deep
N=582952.237 E=2455193.010

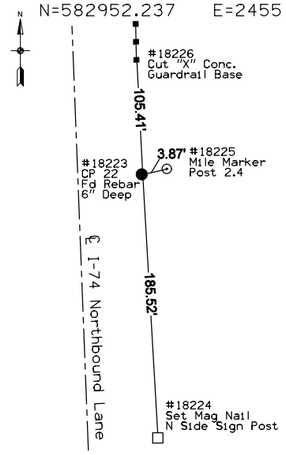

C.P. STA 6936+78.20 LEFT 8.99
C.P. 109, Fd 5/8" Rebar Flush
N=583833.081 E=2455101.910

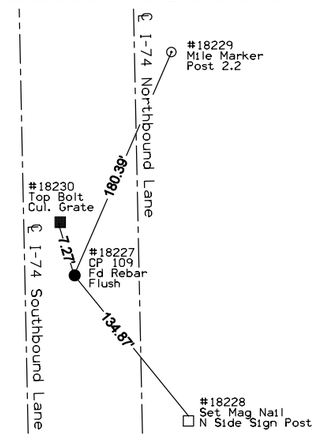

C.P. STA 6946+15.15 RIGHT 7.19
C.P. 108, Fd 5/8" Rebar Flush
N=584770.163 E=2455097.795

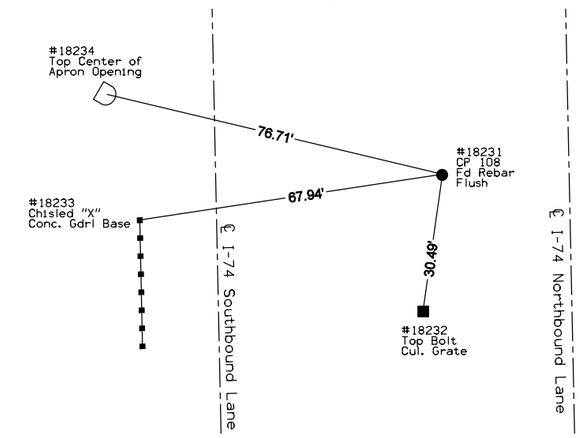

C.P. STA 6956+43.90 RIGHT 78.24
C.P. 107, Fd 5/8" Rebar Flush
N=585800.209 E=2455146.555

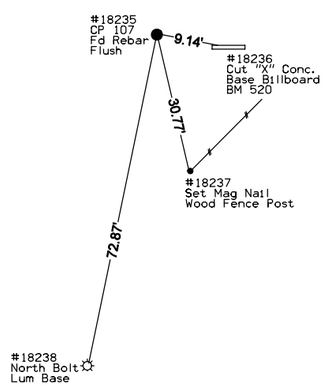

C.P. STA 6965+18.44 LEFT 12.32
C.P. 106, Fd 5/8" Rebar Flush
N=586672.590 E=2455037.086

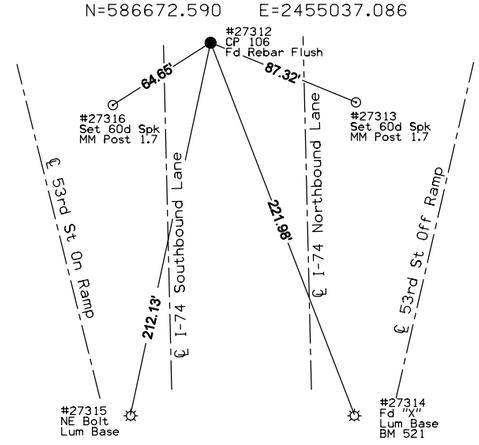

C.P. STA 6974+95.93 LEFT 2188.07
C.P. 161, Fd 5/8" Rebar 6" Deep
N=587602.742 E=2452840.672

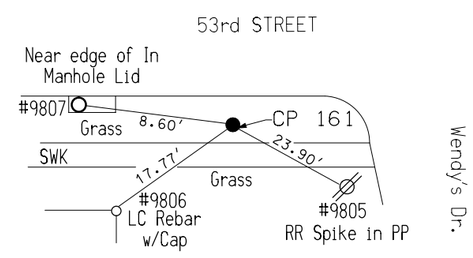

C.P. STA 6975+40.60 RIGHT 998.60
C.P. 165, Fd 5/8" Rebar 2" Deep
N=587716.390 E=2456025.627

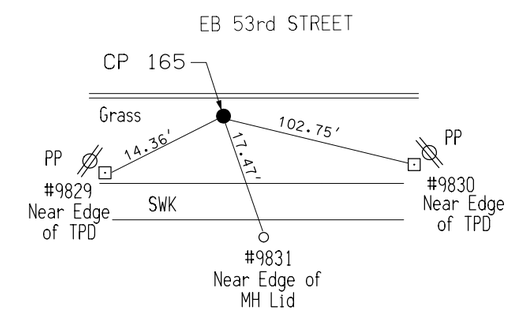

ENGLISH	IOWA DOT	DESIGN TEAM WHKS & Co.	SCOTT COUNTY	PROJECT NUMBER BRFIM-074-1(200)5--05-82	SHEET NUMBER G.7

C.P. STA 6975+52.11 RIGHT 1662.05
C.P. 167, Fd 5/8" Rebar 2" Deep
N=587742.271 E=2456688.676

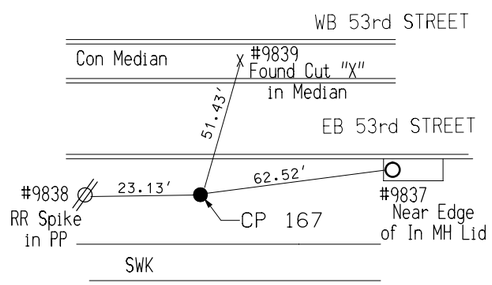

C.P. STA 6975+70.06 LEFT 2804.40
C.P. 160, Fd 5/8" Rebar 6" Deep
N=587663.506 E=2452222.884

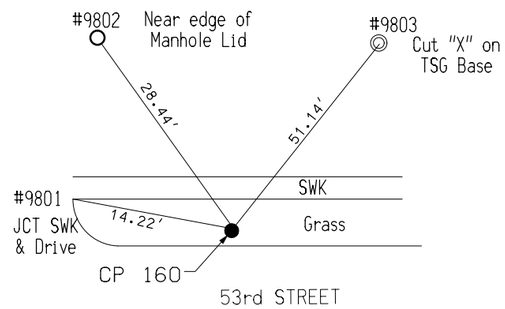

C.P. STA 6976+44.37 RIGHT 573.00
C.P. 150, Fd 5/8" Rebar Flush
N=587810.926 E=2455597.884

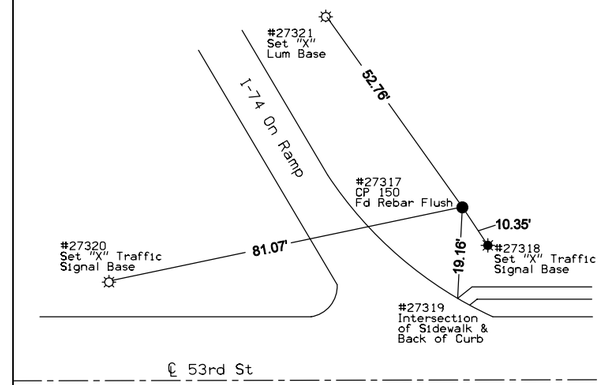

C.P. STA 6976+51.94 RIGHT 1412.05
C.P. 166, Fd 5/8" Rebar 2" Deep
N=587836.658 E=2456436.574

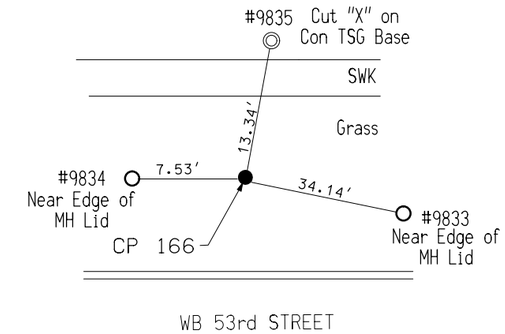

C.P. STA 6982+84.79 RIGHT 4.28
C.P. 104, Fd 5/8" Rebar Flush
N=588438.877 E=2455015.428

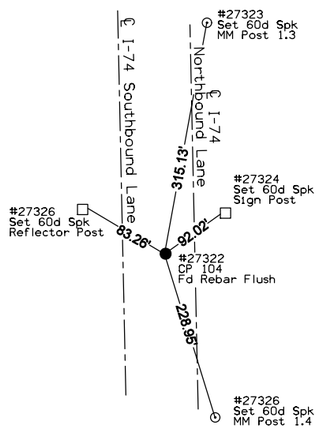

C.P. STA 6992+48.29 RIGHT 78.52
C.P. 103, Fd 5/8" Rebar Flush
N=589403.767 E=2455068.788

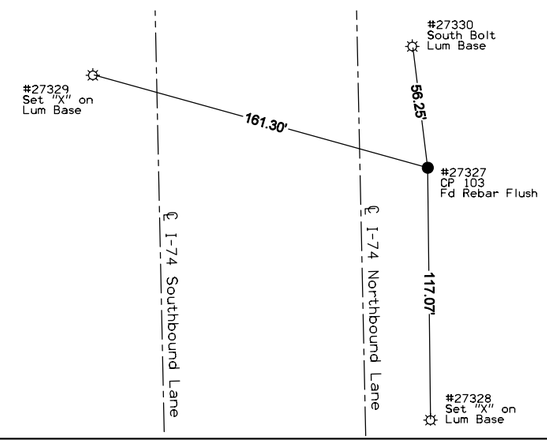

C.P. STA 7001+79.21 LEFT 70.50
C.P. 102, Fd 5/8" Rebar Flush
N=590331.233 E=2454899.652

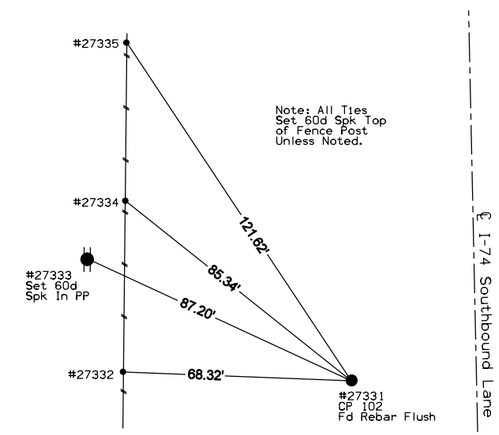

C.P. STA 7007+04.28 RIGHT 64.25
C.P. 24, Fd 5/8" Rebar 6" Deep
N=590859.099 E=2455022.999

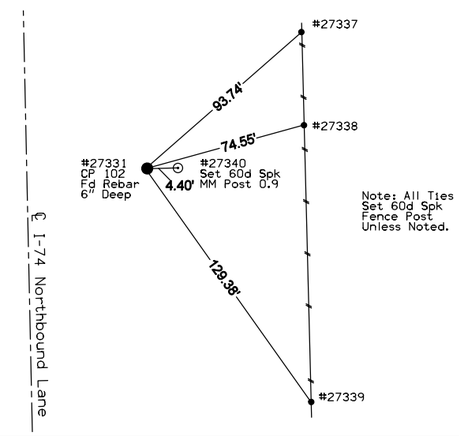

C.P. STA 7010+14.55 LEFT 73.33
C.P. 101, Fd 5/8" Rebar Flush
N=591166.323 E=2454878.741

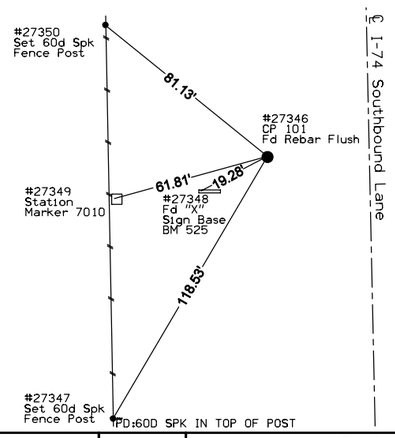

C.P. STA 7020+19.32 LEFT 68.71
C.P. 100, Fd 5/8" Rebar 1" Above Ground
N=592152.498 E=2454793.368

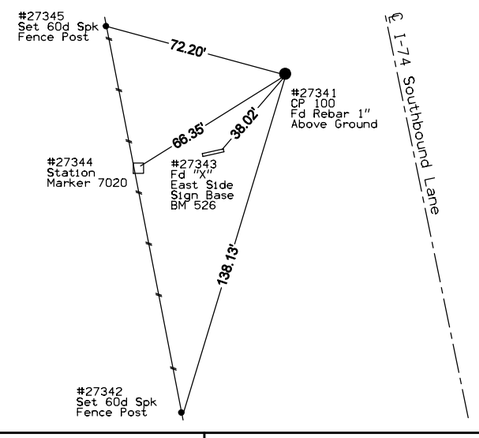

C.P. STA 7029+77.12 LEFT 162.21
C.P. 25, Fd 5/8" Rebar 2" Deep
N=593043.388 E=2454447.883

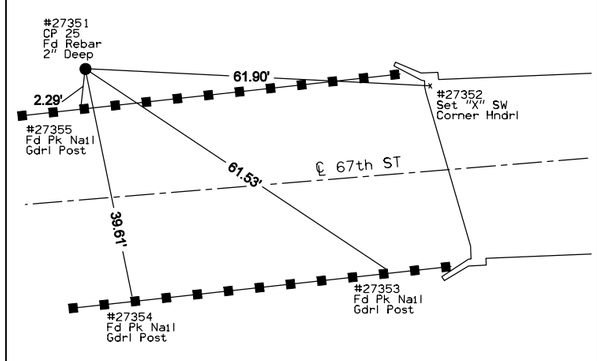

C.P. STA 7051+36.40 RIGHT 65.46
C.P. 26, Fd 5/8" Rebar 6" Deep
N=595179.383 E=2454058.228

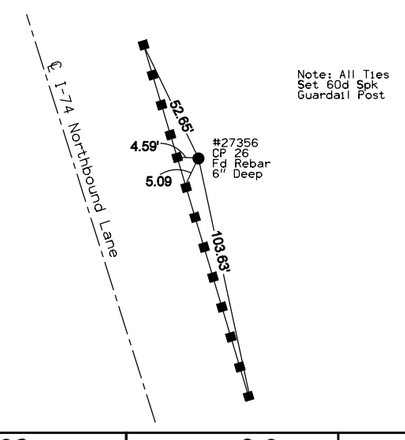

C.P. STA 7311+39.37 LEFT 68.51
C.P. 253, Fd 5/8" Rebar W/ Alum Cap 6" Deep
N=580492.550 E=2454572.971

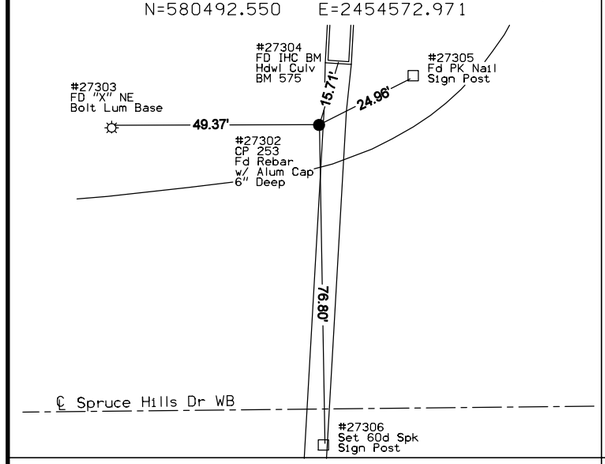

C.P. STA 7324+99.56 RIGHT 87.97
C.P. 252, Fd 5/8" Rebar 2" Deep
N=580350.094 E=2455934.705

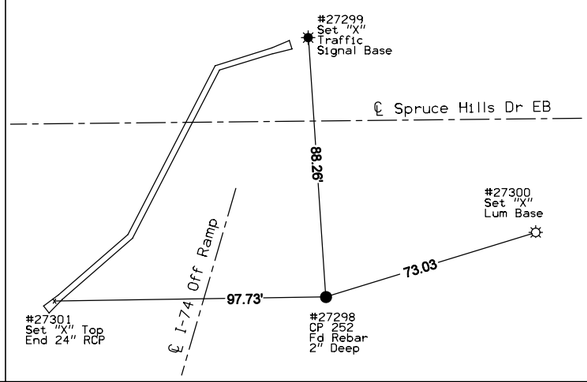

C.P. STA 7329+18.19 RIGHT 82.06
C.P. 154, Fd 5/8" Rebar Flush
N=580360.047 E=2456350.758

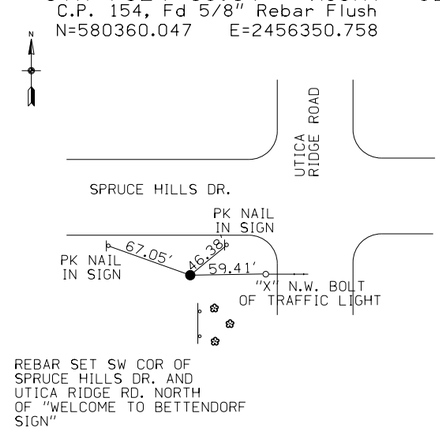

Curve 6RD_IL-1 (6TH-D)
PI STA. = 421+45.59
Δ = 4° 18′ 49.27″ (LT)
D = 4° 46′ 28.73″
R = 1,200.00′
T = 45.19′
L = 90.35′
E = 0.85′
e = R.C.
L = NA
x = NA
m = NA

Curve 6RD_IL-2 (6TH-D)
PI STA. = 434+74.45
Δ = 1° 33′ 28.68″ (RT)
D = 0° 34′ 22.65″
R = 10,000.00′
T = 135.97′
L = 271.92′
E = 0.92′
e = R.C.
L = NA
x = NA
m = NA

Curve RRD-G-1 (RD-G)
PI STA. = 125+86.43
Δ = 2° 09′ 43.09″ (RT)
D = 0° 34′ 22.65″
R = 10,000.00′
T = 188.69′
L = 377.33′
E = 1.78′
e = N.C.
L = NA
x = NA
m = NA

Curve 3RH_IL-1 (RD-H)
PI STA. = 220+64.68
Δ = 5° 37′ 45.59″ (RT)
D = 0° 42′ 58.31″
R = 8,000.00′
T = 393.32′
L = 786.00′
E = 9.66′
e = R.C.
L = NA
x = NA
m = NA

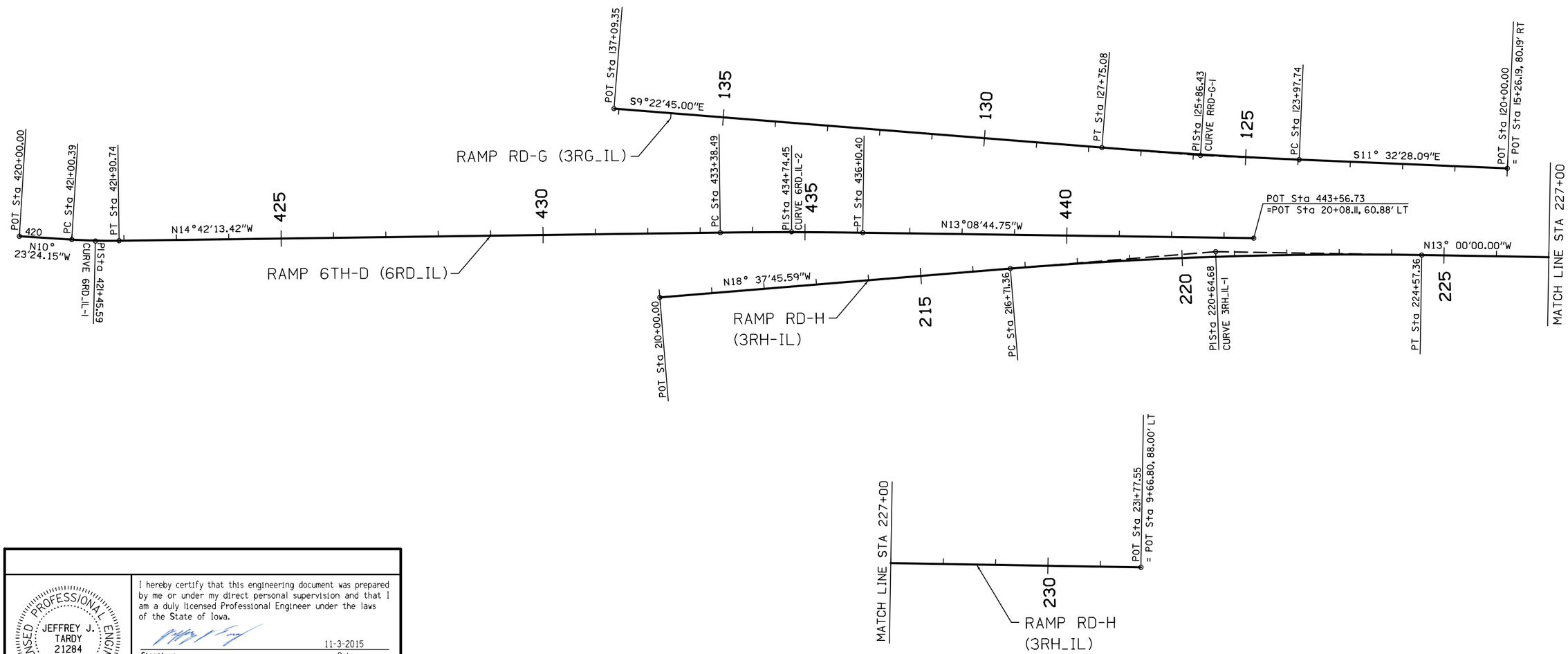

I hereby certify that this engineering document was prepared by me or under my direct personal supervision and that I am a duly licensed Professional Engineer under the laws of the State of Iowa.

LICENSED PROFESSIONAL ENGINEER
JEFFREY J. TARDY
21284
IOWA

Signature — Date: 11-3-2015

Jeffrey J. Tardy
Printed or Typed Name

My license renewal date is December 31, 17

Pages or sheets covered by this seal: G.10-G.17, G.19-G.22, G.24, U.1-U.10

0 FEET 100

ALIGNMENTS
Illinois Ramps

ENGLISH	IOWA DOT	DESIGN TEAM **BENESCH**	**SCOTT** COUNTY	PROJECT NUMBER **BRFIM-074-1(200)5--05-82**	SHEET NUMBER **G.10**

11:41:41 AM untitled c:\pwise_work\do_not_delete\dms04767\82074206-AB-G-01.sht.sht

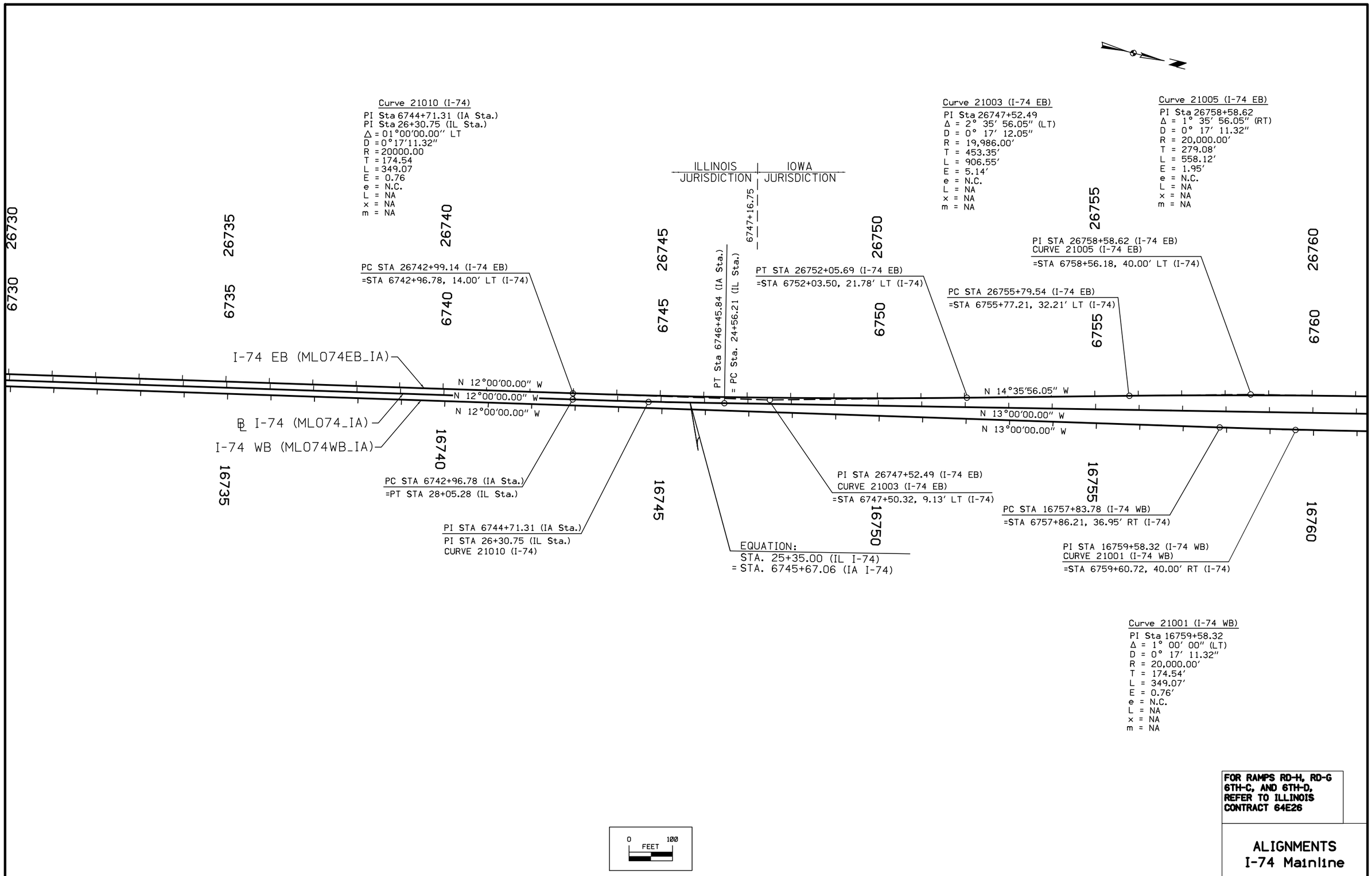

Curve 21001 (I-74 WB)
PI Sta 16759+58.32
Δ = 1° 00' 00" (LT)
D = 0° 17' 11.32"
R = 20,000.00'
T = 174.54'
L = 349.07'
E = 0.76'
e = N.C.
L = NA
x = NA
m = NA

FOR RAMPS RD-H, RD-G 6TH-C, AND 6TH-D, REFER TO ILLINOIS CONTRACT 64E26

ALIGNMENTS
I-74 Mainline

ENGLISH	IOWA DOT	DESIGN TEAM BENESCH	SCOTT COUNTY	PROJECT NUMBER BRFIM-074-1(200)5--05-82	SHEET NUMBER G.11

Curve SWTRAIL-1 (LEVE CONNECTION)
PI Sta 101+31.50
Δ = 111°13′ 23.59″ RT
D = 63°39′ 43.12″
R = 90.00
T = 131.50
L = 174.71
E = 69.35
e = N.C.
L = NA
x = NA
m = NA

Curve SWTRAIL-2 (LEVE CONNECTION)
PI Sta 102+08.44
Δ = 87°53′ 02.91″ RT
D = 163°42′ 08.02″
R = 35.00
T = 33.73
L = 53.69
E = 13.61
e = N.C.
L = NA
x = NA
m = NA

Curve SWTRAIL-3 (LEVE CONNECTION)
PI Sta 102+37.20
Δ = 38°47′ 21.78″ RT
D = 229°10′ 59.23″
R = 25.00
T = 8.80
L = 16.93
E = 1.50
e = N.C.
L = NA
x = NA
m = NA

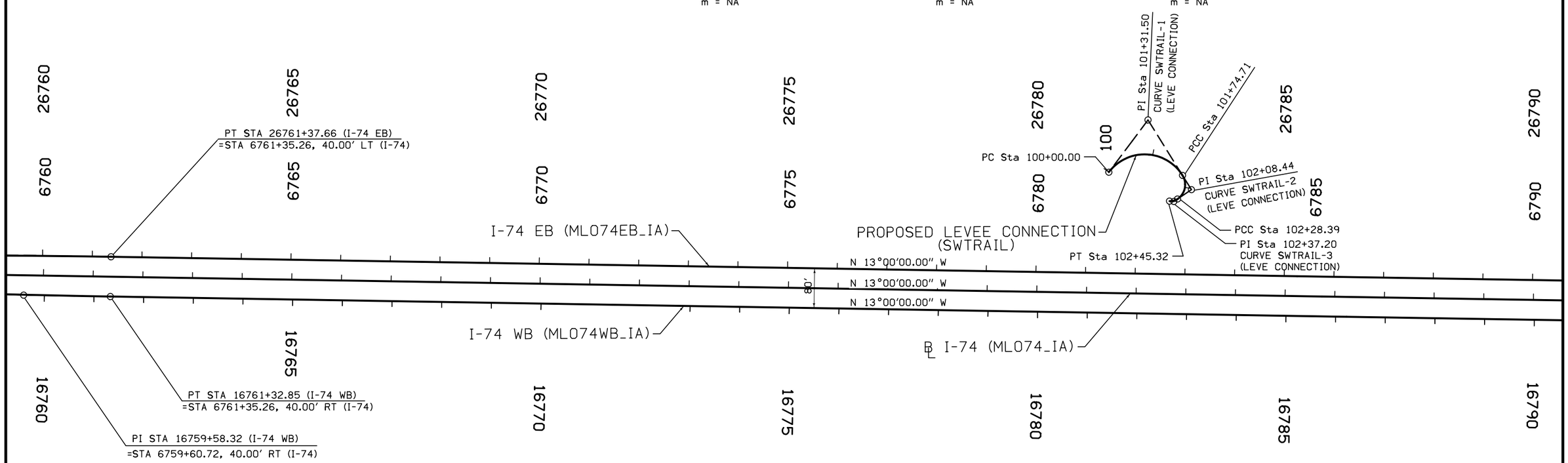

0 FEET 100

ALIGNMENTS

I-74 Mainline

ENGLISH	IOWA DOT	DESIGN TEAM BENESCH	SCOTT COUNTY	PROJECT NUMBER BRFIM-074-1(200)5--05-82	SHEET NUMBER G.12

8:02:59 AM untitled c:\pwise_work\do_not_delete\dms04767\82074206-AB-G-01.sht.sht

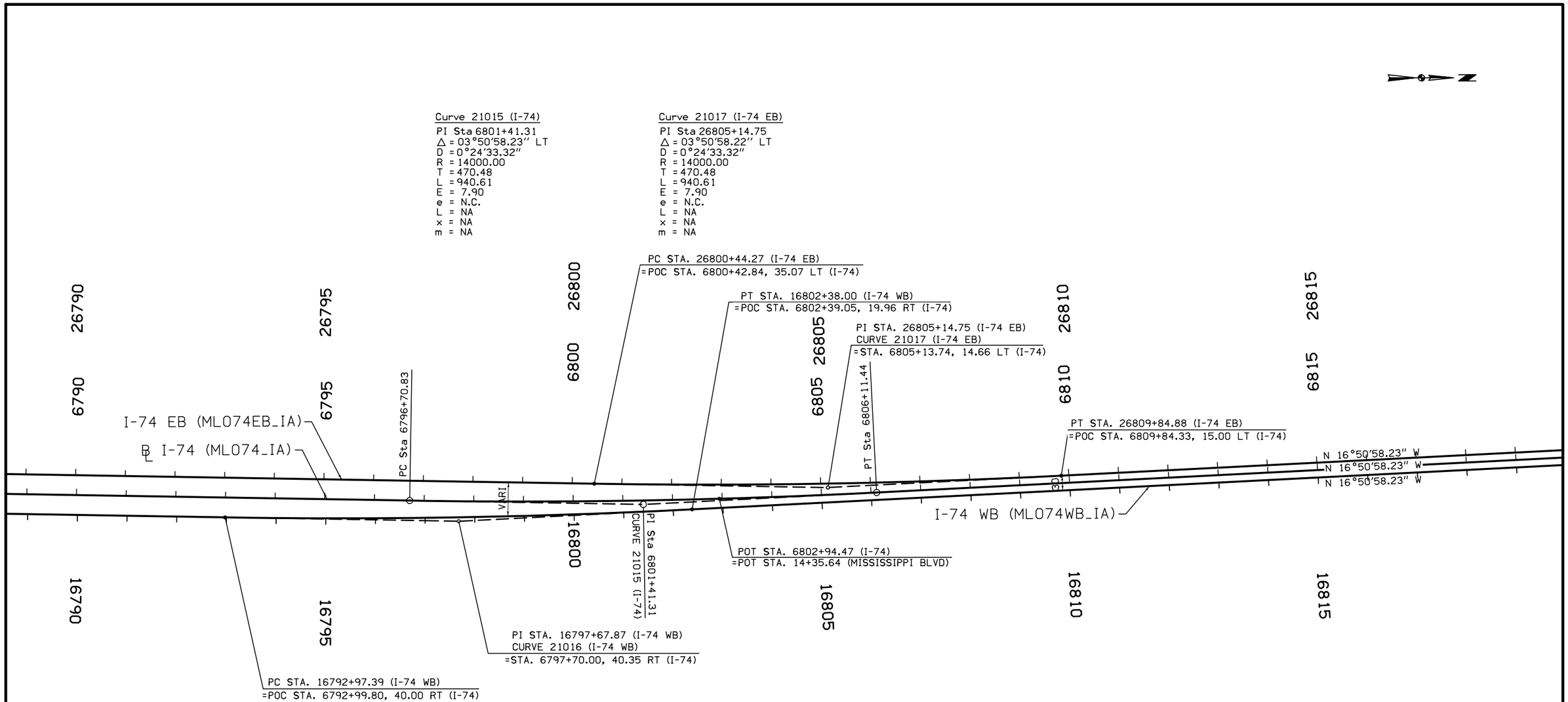

Curve 21016 (I-74 WB)
PI Sta 16797+67.87
Δ = 03°50'58.24" LT
D = 0°24'33.32"
R = 14000.00
T = 470.48
L = 940.61
E = 7.90
e = N.C.
L = NA
x = NA
m = NA

0 100
FEET

ALIGNMENTS

I-74 Mainline

ENGLISH	IOWA DOT	DESIGN TEAM **BENESCH**	SCOTT COUNTY	PROJECT NUMBER **BRFIM-074-1(200)5--05-82**	SHEET NUMBER **G.13**

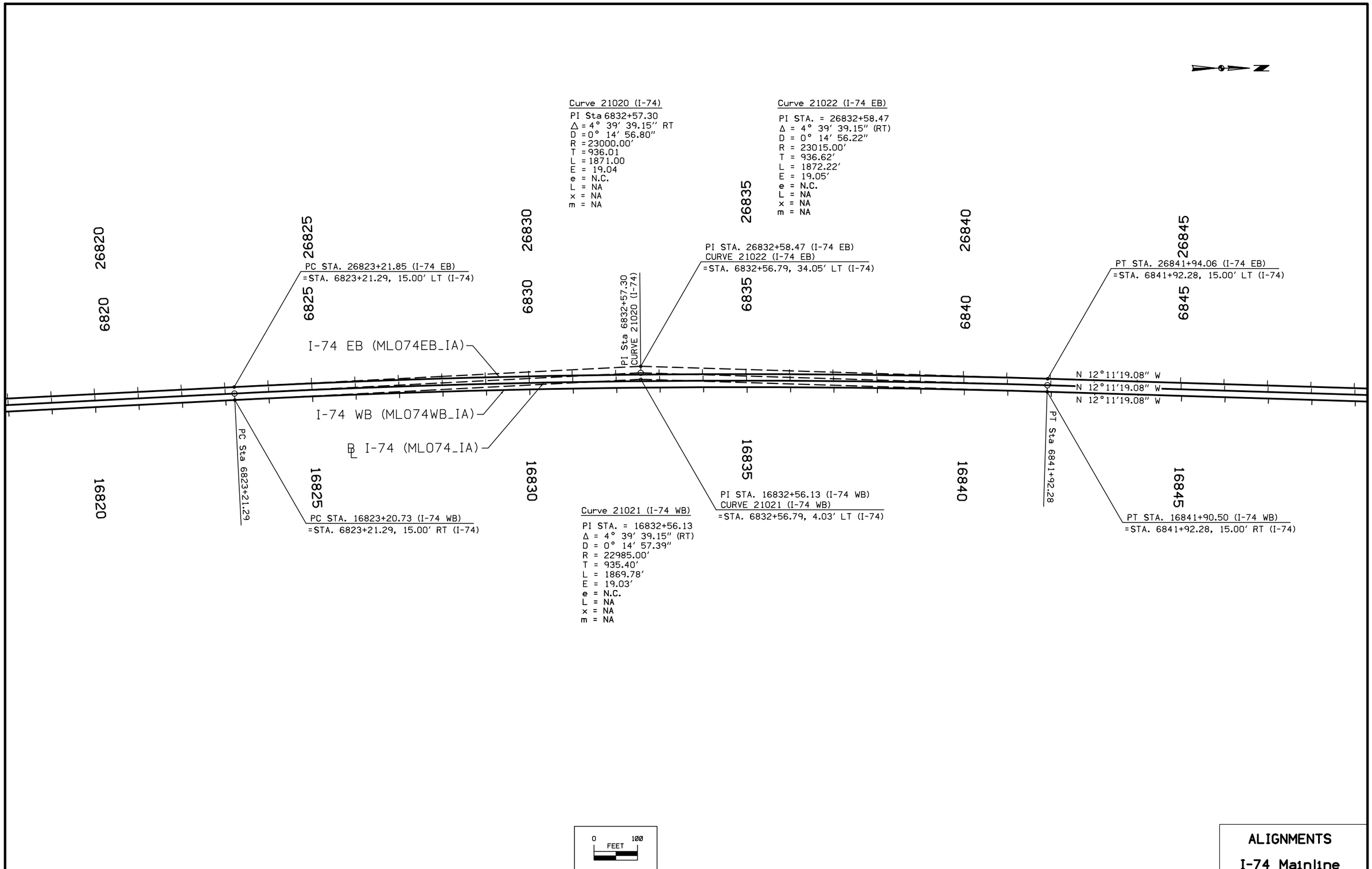

ALIGNMENTS

I-74 Mainline

ENGLISH	IOWA DOT	DESIGN TEAM **BENESCH**	**SCOTT** COUNTY	PROJECT NUMBER **BRFIM-074-1(200)5--05-82**	SHEET NUMBER **G.14**

8:03:23 AM untitled c:\pwise_work\do_not_delete\dms04767\82074206-AB-G-01.sht.sht

Curve 20110 (RAMP C)
PI Sta 3586+05.19
Δ= 3° 17′ 46.82″ (LT)
D = 0° 42′ 58.31″
R = 8000.00′
T = 230.19′
L = 460.26′
E = 3.31′
e = N.C.
L = NA
x = NA
m = NA

POT STA. 1496+21.97 (RAMP A)
= POT STA. 205+20.00 (US 67 SB)

POT STA. 3595+59.96 (RAMP C)
= POT STA. 1608+50.00 (US 67 NB)

STA. 6783+75.00, 104.00 LT (I-74)
= PC STA. 3583+75.00 (RAMP C)

3585

CURVE 20110 (RAMP C)
PI Sta 3586+05.19

PT Sta 3588+35.26

3590

N 17° 26′ 31.57″ W

3595

US 67 RAMP A

US 67 RAMP C
(67IC)

PI Sta 2579+42.72
CURVE 20060 (RAMP B)

PC Sta 2586+35.44

PT Sta 2589+74.70

POT STA. 4495+45.77 (RAMP D)
=POT STA. 208+75.00 (US 67 SB)

N 9°10′00.00″ W

STA. 6776+75.00, 88.00 RT (I-74)
=PC STA. 2576+75.00 (RAMP B)

PT Sta 2582+10.23

PI Sta 2588+05.10
CURVE 20065 (RAMP B)

N 11°35′47.23″ W

N 15°15′47.26″ W

US 67 RAMP B
(67IB)

2580

2585

2590

2595

POT STA. 2595+01.88 (RAMP B)
=POT STA. 1612+00.00 (US 67 NB)

US 67 RAMP D

Curve 20060 (RAMP B)
PI Sta 2579+42.72
Δ = 3° 50′ 00.00″ RT
D = 0° 42′ 58.31″
R = 8000.00
T = 267.72
L = 535.23
E = 4.48
e = N.C.
L = NA
x = NA
m = NA

Curve 20065 (RAMP B)
PI Sta 2588+05.10
Δ = 2° 25′ 47.23″ LT
D = 0° 42′ 58.31″
R = 8000.00
T = 169.66
L = 339.26
E = 1.80
e = N.C.
L = NA
x = NA
m = NA

0 FEET 100

ALIGNMENTS

US 67 Ramps

ENGLISH	IOWA DOT	DESIGN TEAM **BENESCH**	**SCOTT** COUNTY	PROJECT NUMBER **BRFIM-074-1(200)5--05-82**	SHEET NUMBER **G.15**

8:03:36 AM untitled c:\pwise_work\do_not_delete\dms04767\82074206-AB-G-01.sht.sht

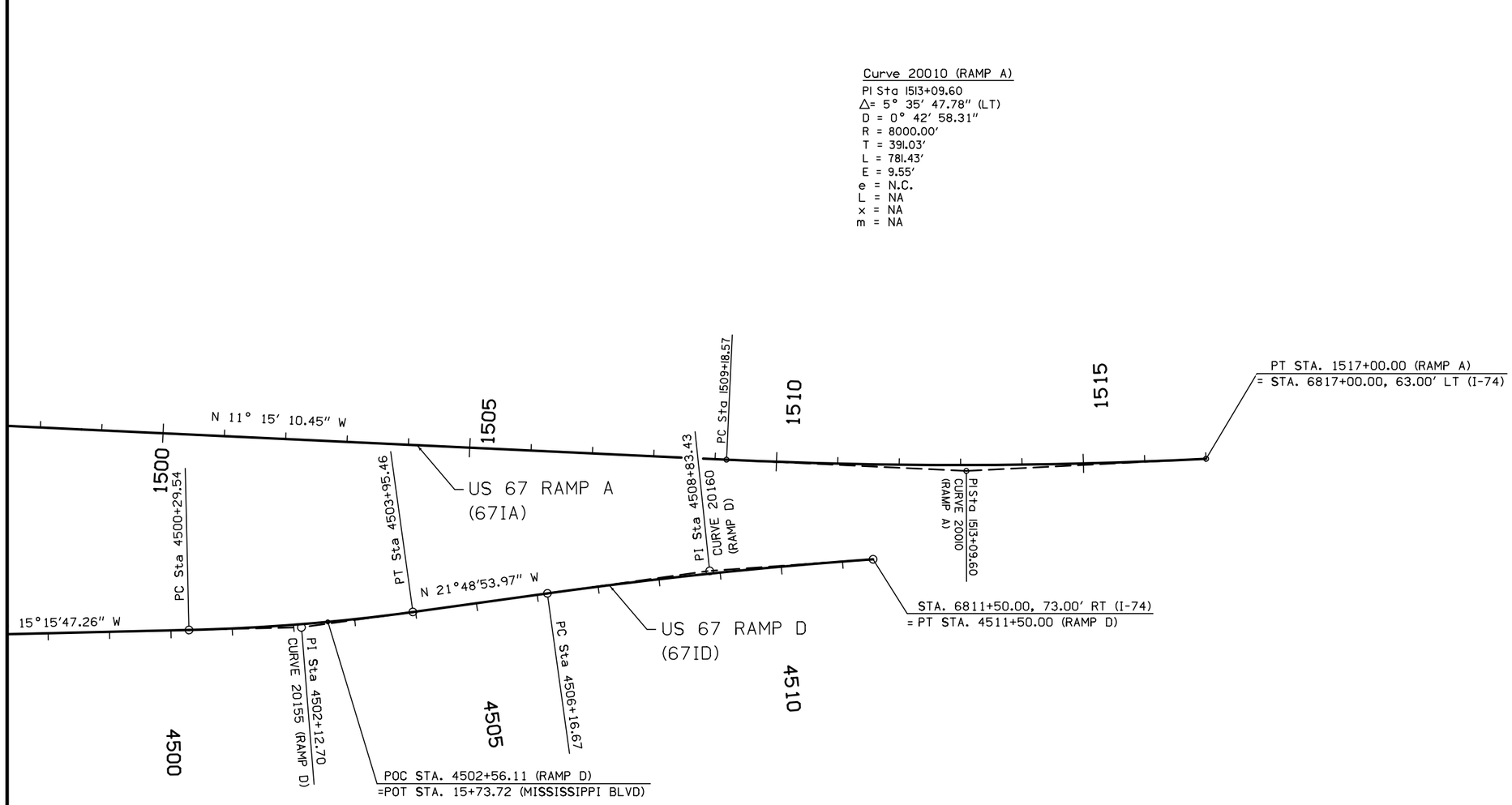

Curve 20155 (RAMP D)

PI Sta 4502+12.70
Δ = 6° 33′ 06.71″ LT
D = 1° 47′ 25.78″
R = 3200.00
T = 183.16
L = 365.93
E = 5.24
e = 2.80
L = 71.00
x = 52.00
m = 21.30

Curve 20160 (RAMP D)

PI Sta 4508+83.43
Δ = 3° 49′ 10.99″ RT
D = 0° 42′ 58.31″
R = 8000.00
T = 266.77
L = 533.33
E = 4.45
e = N.C.
L = NA
x = NA
m = NA

0 FEET 100

ALIGNMENTS

US 67 Ramps

ENGLISH	IOWA DOT	DESIGN TEAM **BENESCH**	SCOTT COUNTY	PROJECT NUMBER **BRFIM-074-1(200)5--05-82**	SHEET NUMBER **G.16**

Curve MDIC_OI-1 (INTERIM RAMP C)

PI Sta. = 3544+35.84
Δ = 3° 06′ 08.24″ (LT)
D = 0° 57′ 17.75″
R = 6,000.00′
T = 162.48′
L = 324.87′
E = 2.20′
e = N.C.
L = NA
x = NA
m = NA

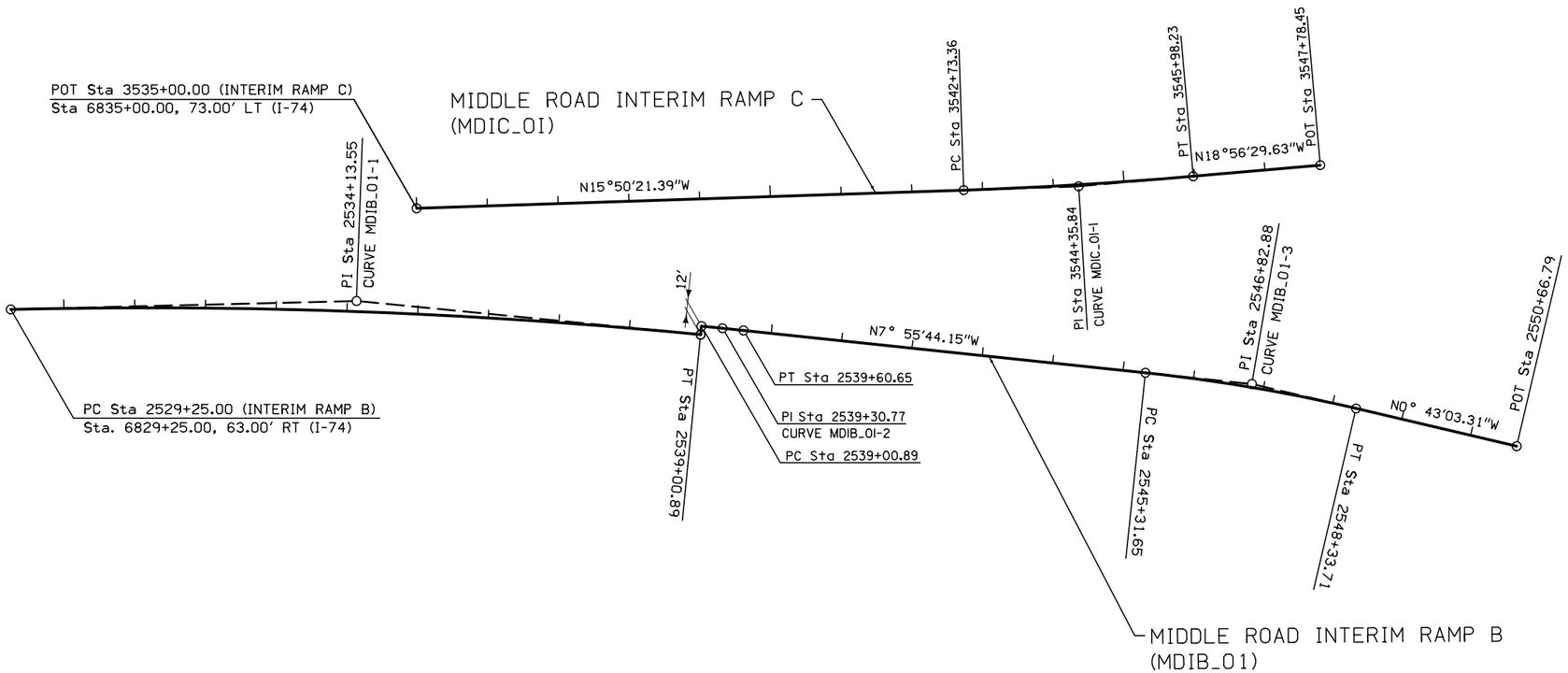

Curve MDIB_OI-1 (INTERIM RAMP B)

PI Sta. = 2534+13.55
Δ = 6° 59′ 21.45″ (RT)
D = 0° 42′ 58.31″
R = 8,000.00′
T = 488.55′
L = 975.89′
E = 14.90′
e = N.C.
L = NA
x = NA
m = NA

Curve MDIB_OI-2 (INTERIM RAMP B)

PI Sta. = 2539+30.77
Δ = 0° 25′ 38.55″ (RT)
D = 0° 42′ 54.45″
R = 8,012.00′
T = 29.88′
L = 59.76′
E = 0.06′
e = N.C.
L = NA
x = NA
m = NA

Curve MDIB_OI-3 (INTERIM RAMP B)

PI Sta. = 2546+82.88
Δ = 7° 12′ 40.84″ (RT)
D = 2° 23′ 14.37″
R = 2,400.00′
T = 151.23′
L = 302.07′
E = 4.76′
e = N.C.
L = NA
x = NA
m = NA

0 100
FEET

ALIGNMENTS

Middle Rd Ramps

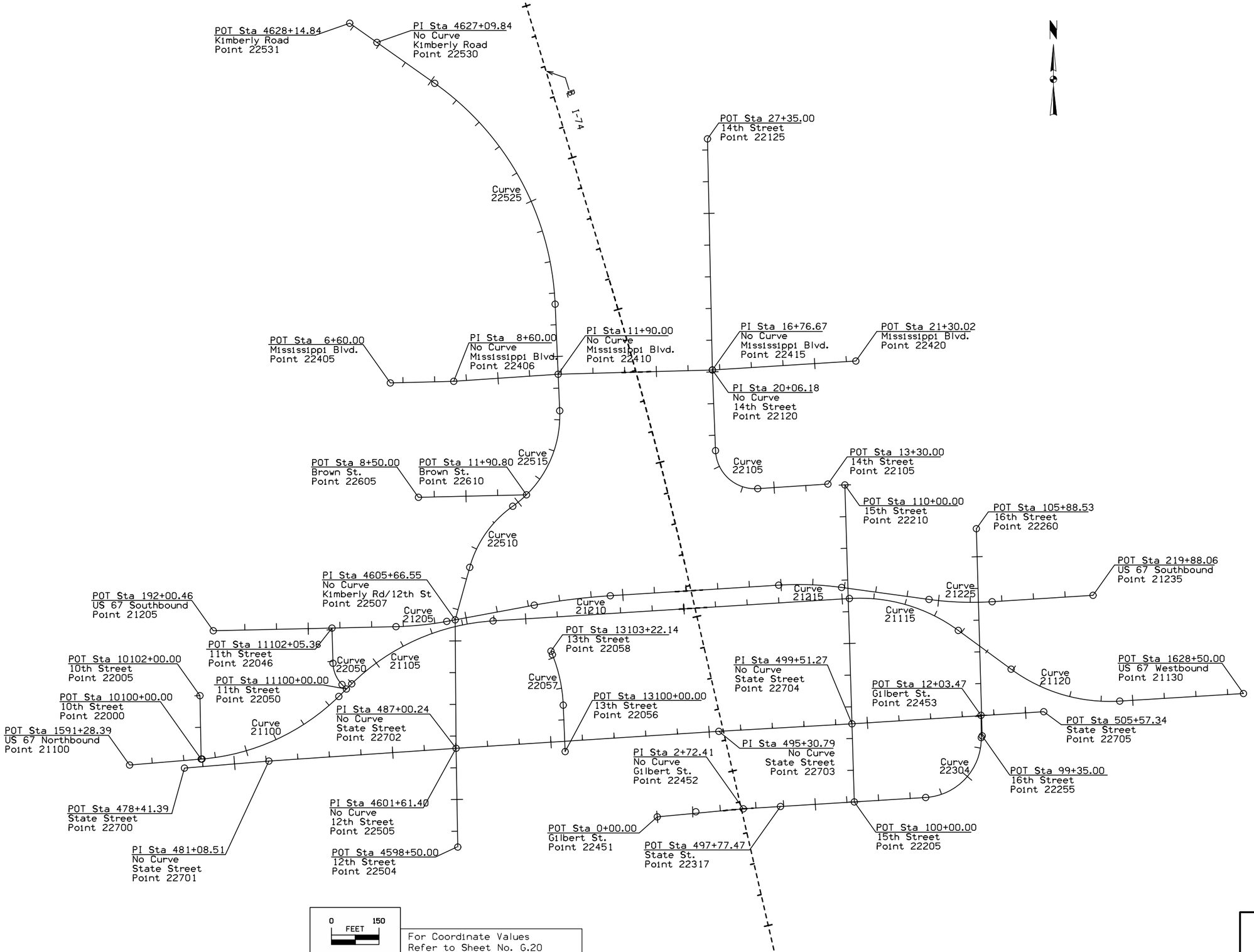

For Coordinate Values
Refer to Sheet No. G.20

LOCAL ROADS ALIGNMENTS

ENGLISH	IOWA DOT	DESIGN TEAM WHKS & Co.	SCOTT COUNTY	PROJECT NUMBER BRFIM-074-1(200)5--05-82	SHEET NUMBER G.18

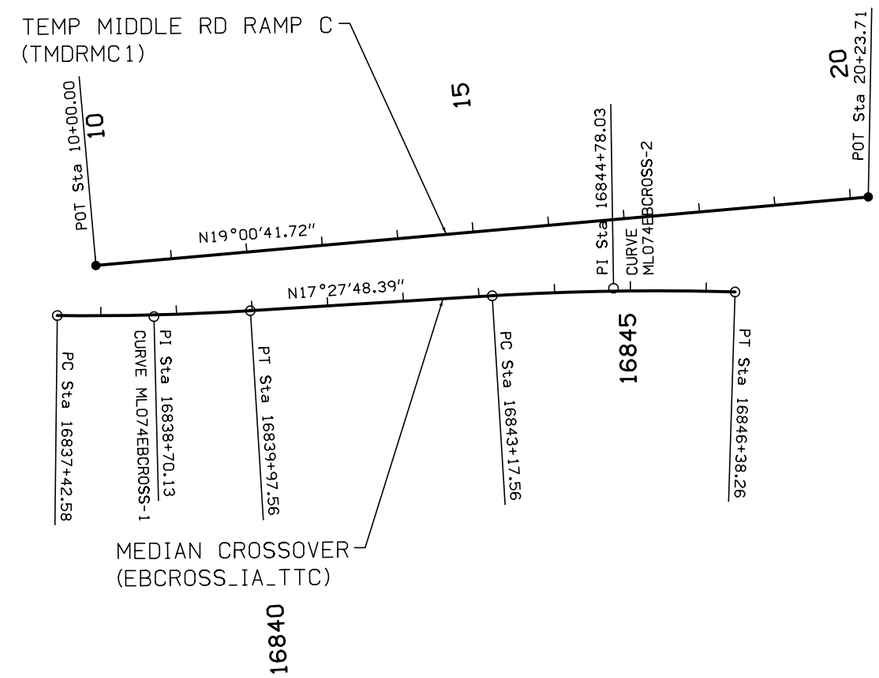

Curve ML074EBCROSS-1

PI Sta. = 16838+70.13
Δ = 4°09′ 16.35″ (LT)
D = 1°37′ 45.63″
R = 3,516.5′
T = 127.55′
L = 254.98′
E = 2.31′
e = N.C.
L = NA
x = NA
m = NA

Curve ML074EBCROSS-2

PI Sta. = 106844+78.03
Δ = 5° 16′ 29.32″ (RT)
D = 1° 38′ 41.19″
R = 3,483.5′
T = 160.46′
L = 320.70′
E = 3.69′
e = N.C.
L = NA
x = NA
m = NA

0 FEET 100

ALIGNMENTS

DETOUR

ENGLISH	IOWA DOT	DESIGN TEAM BENESCH	SCOTT COUNTY	PROJECT NUMBER BRFIM-074-1(200)5--05-82	SHEET NUMBER G.19

8:05:30 AM untitled c:\pwise_work\do_not_delete\dms04767\82074206-AB-G-01.sht.sht

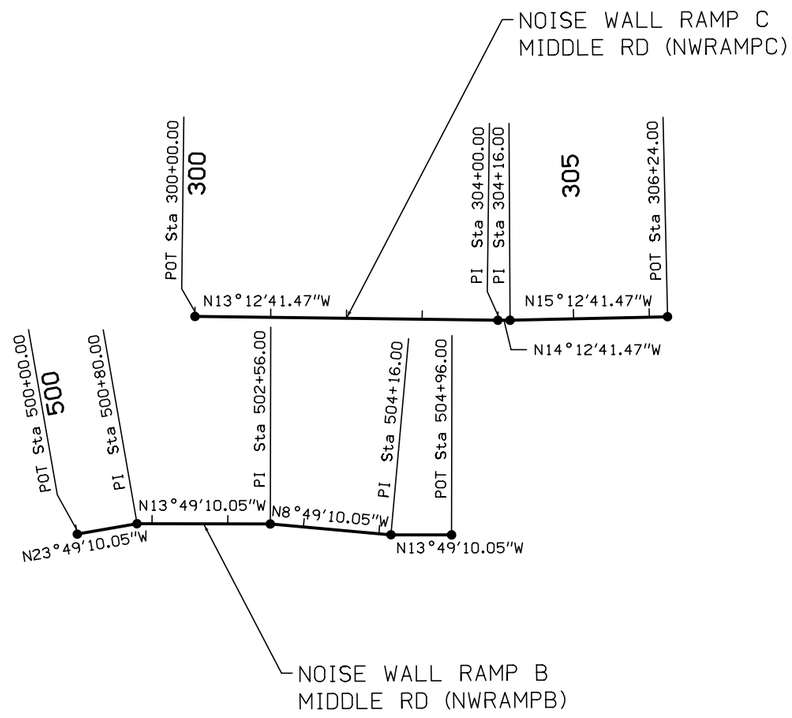

0 FEET 100

ALIGNMENTS

Noise Walls

ENGLISH	IOWA DOT	DESIGN TEAM **BENESCH**	**SCOTT** COUNTY	PROJECT NUMBER **BRFIM-074-1(200)5--05-82**	SHEET NUMBER **G.20**

8:05:43 AM untitled c:\pwise_work\do_not_delete\dms04767\82074206-AB-G-01.sht.sht

ALIGNMENT COORDINATES

101-16
10-20-09

Name	Location	Point on Tangent			Begin Spiral			Begin Curve			Simple Curve PI or Master PI of SCS			End Curve			End Spiral		
		Station	Coordinates		Station	Coordinates		Station	Coordinates		Station	Coordinates		Station	Coordinates		Station	Coordinates	
			Y (Northing)	X (Easting)		Y (Northing)	X (Easting)		Y (Northing)	X (Easting)		Y (Northing)	X (Easting)		Y (Northing)	X (Easting)		Y (Northing)	X (Easting)
ML074_IA	I-74 MAINLINE																		
21009		6719+17.38	562672.89	2459725.37															
21010								6742+96.78	565000.29	2459230.66	6744+71.31	565171.01	2459194.38	6746+45.84	565341.08	2459155.11			
21015								6796+70.83	570237.28	2458024.74	6801+41.31	570695.70	2457918.90	6806+11.44	571145.99	2457782.53			
21020								6823+21.29	572782.43	2457286.91	6832+57.30	573678.26	2457015.60	6841+92.28	574593.17	2456817.98			
ML074EB_IA	I-74 EB																		
21001		26722+61.55	563004.32	2459640.61															
21003								26742+99.14	564997.38	2459216.97	26747+52.49	565440.83	2459122.71	26752+05.69	565879.54	2459008.44			
21005								26755+79.54	566241.33	2458914.21	26758+58.62	566511.40	2458843.87	26761+37.66	566783.32	2458781.09			
21017								26800+44.27	570589.80	2457902.30	26805+14.75	571048.23	2457796.46	26809+84.88	571498.51	2457660.09			
21022								26823+21.85	572778.08	2457272.56	26832+58.47	573674.49	2457001.07	26841+94.06	574590.00	2456803.32			
ML074WB_IA	I-74 WB																		
21000		16722+56.30	563010.14	2459668.00															
21001								16757+83.78	566460.53	2458934.59	16759+58.32	566631.26	2458898.31	16761+32.85	566801.32	2458859.04			
21016								16792+97.39	569884.75	2458147.18	16797+67.87	570343.18	2458041.34	16802+38.00	570793.46	2457904.97			
21021								16823+20.73	572786.78	2457301.27	16832+56.13	573682.02	2457030.14	16841+90.50	574596.34	2456832.64			
67IA	RAMP A																		
20005		1496+21.97	570140.13	2457849.37															
20010								1509+18.57	571411.80	2457596.35	1513+09.60	571795.31	2457520.05	1517+00.00	572169.55	2457406.70			
20010		1517+00.00	572169.55	2457406.70															
67IB	RAMP B																		
20060		2576+75.00	568312.39	2458559.45															
20060								2576+75.00	568312.39	2458559.45	2579+42.72	568573.25	2458499.22	2582+10.23	568837.55	2458456.57			
20065								2586+35.44	569257.33	2458388.84	2588+05.10	569424.82	2458361.81	2589+74.70	569591.01	2458327.70			
20070		2595+01.88	570107.42	2458221.73															
67IC	RAMP C																		
20110		3583+75.00	568951.26	2458214.90															
20110								3583+75.00	568951.26	2458214.90	3586+05.19	569174.47	2458158.65	3588+35.26	569394.08	2458089.65			
20115		3595+59.96	570085.46	2457872.42															
67ID	RAMP D																		
20150		4495+45.77	570162.40	2458203.67															
20155								4500+29.54	570629.09	2458076.32	4502+12.70	570805.80	2458028.10	4503+95.46	570975.84	2457960.04			
20160								4506+16.67	571181.20	2457877.84	4508+83.43	571428.87	2457778.70	4511+50.00	571682.58	2457696.29			
20160		4511+50.00	571682.58	2457696.29															
3RG_IL	RAMP RD-G																		
RRDG1		120+00.00	566229.23	2458867.76															
RRD-G-1								123+97.74	565839.53	2458947.34	125+86.43	565654.65	2458985.09	127+75.08	565468.49	2459015.84			
RRDG2		137+09.35	564546.70	2459168.10															
3RH_IL	RAMP RD-H																		
RRDH1		210+00.00	564718.25	2459496.40															
3RH IL-1								216+71.36	565354.44	2459281.94	220+64.68	565727.15	2459156.30	224+57.36	566110.38	2459067.82			
RRDH2		231+77.55	566812.12	2458905.81															
6RD_IL	RAMP 6TH-D																		
RSIXD1		420+00.00	563503.63	2459677.85															
6RD IL-1								421+00.39	563602.38	2459659.74	421+45.59	563646.83	2459651.59	421+90.74	563690.55	2459640.12			
6RD IL-2								433+38.49	564800.71	2459348.80	434+74.45	564932.22	2459314.29	436+10.40	565064.62	2459283.36			
RSIXD2		443+56.73	565791.39	2459113.63															
RW165_IA	RET WALL 165																		
RW200		11503+85.96	570886.41	2457684.57															
RW201		11504+40.00	570939.41	2457674.03															
RW202		11504+60.00	570959.31	2457672.11															
RW165 1								11509+18.57	571409.07	2457582.62	11509+95.78	571484.80	2457567.55	11510+72.99	571560.22	2457551.02			
	MIDDLE RD																		
MDIB_OI	INTERIM RAMP B																		
MDIB_OI-1								2529+25.00	573379.12	2457180.28	2534+13.55	573850.25	2457050.99	2539+00.89	574333.62	2456979.99			
MDIB_OI-2								2539+00.89	574331.87	2456968.12	2539+30.77	574361.44	2456963.77	2539+60.65	574391.03	2456959.65			
MDIB_OI-3								2545+31.65	574956.57	2456880.89	2546+82.88	575106.36	2456860.02	2548+33.71	575257.58	2456858.13			
MDIB2		2550+66.79	575490.64	2456855.21															
	MIDDLE RD																		
MDIC_OI	INTERIM RAMP C																		
MDIC1		3535+00.00	573901.24	2456903.45															
MDIC_OI-1								3542+73.36	574645.24	2456692.36	3544+35.84	574801.55	2456648.02	3545+98.23	574955.22	2456595.28			
MDIC2		3547+78.45	575125.68	2456536.78															
EBCROSS_IA_TTC	TEMP CROSSOVER																		
ML074EBCROSS-1								16837+42.58	574162.27	2456949.82	16838+70.13	574286.39	2456920.46	16839+97.56	574408.06	2456882.18			
ML074EBCROSS-2								16843+17.56	574713.32	2456786.15	16844+78.03	574866.38	2456737.99	16846+38.26	575023.23	2456704.12			
	TEMP MIDDLE RD																		
TMDRMC1	ENTRANCE RAMP																		
TM112		10+00.00	574195.82	2456873.42															
TM113		20+23.71	575163.69	2456539.94															
SWTRAIL-1	PROPOSED LEVEE							100+00.00	568692.07	2458131.98	101+31.50	568743.30	2458010.87	101+74.71	568837.65	2458102.47			
SWTRAIL-2	CONNECTION							101+74.71	568837.65	2458102.47	102+08.44	568861.85	2458125.97	102+28.39	568839.27	2458151.02			
SWTRAIL-3								102+28.39	568839.27	2458151.02	102+37.20	568833.37	2458157.56	102+45.32	568824.69	2458158.96			

ALIGNMENT COORDINATES

101-16
10-20-09

Name	Location	Point on Tangent			Begin Spiral			Begin Curve			Simple Curve PI or Master PI of SCS			End Curve			End Spiral		
		Station	Coordinates		Station	Coordinates		Station	Coordinates		Station	Coordinates		Station	Coordinates		Station	Coordinates	
			Y (Northing)	X (Easting)		Y (Northing)	X (Easting)		Y (Northing)	X (Easting)		Y (Northing)	X (Easting)		Y (Northing)	X (Easting)		Y (Northing)	X (Easting)
NWRAMPB	NOISEWALL RAMP B																		
NW30	MIDDLE RD	500+00.00	573923.91	2457120.59															
NW31		500+80.00	573997.10	2457088.28															
NW32		502+56.00	574168.01	2457046.24															
NW33		504+16.00	574326.11	2457021.71															
NW34		504+96.00	574403.80	2457002.60															
NWRAMPC	NOISEWALL RAMP C																		
NW10	MIDDLE RD	300+00.00	574005.49	2456804.27															
NW11		304+00.00	574394.90	2456712.85															
NW12		304+16.00	574410.42	2456708.92															
NW13		306+24.00	574611.13	2456654.35															
RW135_IA	RET WALL 135																		
RW100		14498+50.00	570458.52	2458133.23															
RW135_1								14500+29.54	570631.73	2458085.97	14501+04.57	570704.11	2458066.22	14501+79.57	570775.49	2458043.10			

SPIRAL OR CIRCULAR CURVE DATA

101-17
04-19-11

Name	Location	Δ_{SCS}	Horizontal Alignment Data													Remarks
			Spiral Data								Curve Data					
			θs	Ls	Ts	Es	Xc	Yc	L.T.	S.T.	Δ_C	T	L	R	E	
I074_IA	I-74 MAINLINE															
21010											1°00′00.00″ LT	174.54′	349.07′	20,000.00′	0.76′	
21015											3°50′58.23″ LT	470.48′	940.61′	14,000.00′	7.90′	
21020											4°39′39.15″ RT	936.01′	1,871.00′	23,000.00′	19.04′	
ML074EB_IA	I-74 EB															
21003											2°35′56.05″ LT	453.35′	906.55′	19,986.00′	5.14′	
21005											1°35′56.05″ RT	279.08′	558.12′	20,000.00′	1.95′	
21017											3°50′58.22″ LT	470.48′	940.61′	14,000.00′	7.90′	
21022											4°39′39.15″ RT	936.62′	1,872.22′	23,015.00′	19.05′	
ML074WB_IA	I-74 WB															
21001											1°00′00.00″ LT	174.54′	349.07′	20,000.00′	0.76′	
21016											3°50′58.24″ LT	470.48′	940.61′	14,000.00′	7.90′	
21021											4°39′39.15″ RT	935.40′	1,869.78′	22,985.00′	19.03′	
67IA	RAMP A															
20010											5°35′47.78″ LT	391.03′	781.43′	8,000.00′	9.55′	
67IB	RAMP B															
20060											3°50′00.00″ RT	267.72′	535.23′	8,000.00′	4.48′	
20065											2°25′47.23″ LT	169.66′	339.26′	8,000.00′	1.80′	
67IC	RAMP C															
20110											3°17′46.82″ LT	230.19′	460.26′	8,000.00′	3.31′	
67ID	RAMP D															
20155											6°33′06.71″ LT	183.16′	365.93′	3,200.00′	5.24′	
20160											3°49′10.99″ RT	266.77′	533.33′	8,000.00′	4.45′	
3RG_IL	RAMP RD-G															
RRD-G-1											2°09′43.09″ RT	188.69′	377.33′	10,000.00′	1.78′	
3RH_IL	RAMP RD-H															
3RHIL-1											5°37′45.59″ RT	393.32′	786.00′	8,000.00′	9.66′	
6RD_IL	RAMP 6TH-D															
6RDIL-1											4°18′49.27″ LT	45.19′	90.35′	1,200.00′	0.85′	
6RDIL-2											1°33′28.68″ RT	135.97′	271.92′	10,000.00′	0.92′	
RW165_IA	RET WALL 165															
RW165 1											1°06′28.57″ LT	77.22′	154.43′	7,986.00′	0.37′	
MDIB OI	MIDDLE RD RAMP B															
MDIB OI-1											6°59′21.45″ RT	488.55′	975.89′	8000.00′	14.9′	
MDIB OI-2											0°25′38.55″ RT	29.88′	59.76′	8012.00′	0.06′	
MDIB OI-3											7°12′40.84″ RT	151.23′	302.07′	2400.00′	4.76′	
MDIC OI	MIDDLE RD RAMP C															
MDIC OI-1											3°06′08.24″ LT	162.48′	324.87′	6000.00′	2.20′	
EBCROSS_IA_TTC	TEMP MEDIAN CROSS OVER															
ML074EBCROSS-1											4°09′16.35″ LT	127.55′	254.98′	3516.50′	2.31′	
ML074EBCROSS-2											5°16′29.32″ RT	160.46′	320.70′	3483.50′	3.69′	
SWTRAIL-1	PROPOSED LEVEE CONNECTION										111°13′23.59″ RT	131.50′	174.71′	90.00′	69.35′	
SWTRAIL-2											87°53′02.91″ RT	33.73′	53.69′	35.00′	13.61′	
SWTRAIL-3											38°47′21.78″ RT	8.80′	16.93′	25.00′	1.50′	
RW135_IA	RET WALL 135															
RW135 1											2°40′40.59″ LT	75.03′	150.03′	3,210.00′	0.88′	

ALIGNMENT COORDINATES

101-16
10-20-09

Name	Location	Point on Tangent			Begin Spiral			Begin Curve			Simple Curve PI or Master PI of SCS			End Curve			End Spiral		
		Station	Coordinates		Station	Coordinates		Station	Coordinates		Station	Coordinates		Station	Coordinates		Station	Coordinates	
			Y (Northing)	X (Easting)		Y (Northing)	X (Easting)		Y (Northing)	X (Easting)		Y (Northing)	X (Easting)		Y (Northing)	X (Easting)		Y (Northing)	X (Easting)
	US 67 SOUTHBOUND																		
21205		192+00.46	570,025.981	2,456,537.815															
21205								197+76.87	570,038.915	2,457,114.077	198+57.61	570,040.727	2,457,194.804	199+38.01	570,055.468	2,457,274.194			
21210								202+18.73	570,106.715	2,457,550.194	203+39.69	570,128.797	2,457,669.124	204+60.36	570,136.385	2,457,789.849			
21215								209+92.57	570,169.770	2,458,321.011	210+92.33	570,176.028	2,458,420.574	211+91.43	570,162.494	2,458,519.411			
21225								214+69.68	570,124.744	2,458,795.083	215+69.77	570,111.164	2,458,894.252	216+69.20	570,117.509	2,458,994.146			
21235		219+88.06	570,137.723	2,459,312.364															
	US 67 NORTHBOUND																		
21100		1591+28.39	569,602.502	2,456,273.908															
21100								1593+57.53	569,621.535	2,456,502.260	1596+09.69	569,642.479	2,456,753.540	1598+41.58	569,818.849	2,456,933.744			
21105								1598+98.53	569,858.684	2,456,974.445	1601+58.77	570,040.714	2,457,160.431	1603+96.85	570,057.039	2,457,420.160			
21115								1615+22.86	570,127.672	2,458,543.955	1617+13.20	570,139.612	2,458,733.922	1618+88.07	570,027.033	2,458,887.402			
21120								1620+94.69	569,904.824	2,459,054.011	1622+84.52	569,792.548	2,459,207.077	1624+58.99	569,804.128	2,459,396.552			
21130		1628+50.00	569,827.981	2,459,786.835															
	STATE STREET																		
22700		478+41.39	569,592.839	2,456,446.919															
22701		481+08.51	569,615.027	2,456,713.123															
22702		487+00.24	569,655.251	2,457,303.482															
22703		495+30.79	569,708.817	2,458,132.302															
22704		499+51.27	569,732.469	2,458,552.118															
22705		505+57.34	569,770.682	2,459,156.979															
	KIMBERLY ROAD																		
22507		4605+66.55	570,060.395	2,457,300.729															
22510								4607+38.27	570,225.879	2,457,346.563	4608+63.42	570,346.488	2,457,379.969	4609+78.65	570,418.570	2,457,482.275			
22515								4609+78.65	570,418.570	2,457,482.275	4611+69.83	570,528.686	2,457,638.562	4613+28.61	570,719.693	2,457,630.364			
22525								4616+65.09	571,055.857	2,457,615.937	4621+06.86	571,497.226	2,457,596.994	4624+86.45	571,752.215	2,457,236.236			
22530		4627+09.84	571,881.154	2,457,053.814															
22531		4628+14.84	571,941.759	2,456,968.070															
	MISSISSIPPI BOULEVARD																		
22405		6+60.00	570,807.419	2,457,096.238															
22406		8+60.00	570,812.549	2,457,296.172															
22410		11+90.00	570,834.875	2,457,625.421															
22415		16+76.67	570,848.205	2,458,111.902															
22420		21+30.02	570,876.535	2,458,564.364															
	BROWN STREET																		
22605		8+50.00	570,446.718	2,457,184.866															
22610		11+90.80	570,454.623	2,457,525.571															
	10TH STREET																		
22000		10100+00.00	569,621.314	2,456,499.608															
22005		10102+00.00	569,821.276	2,456,495.722															
	11TH STREET																		
22050		11100+00.00	569,842.226	2,456,957.629															
22050								11100+19.76	569,856.349	2,456,943.806	11100+58.91	569,884.329	2,456,916.421	11100+94.40	569,923.465	2,456,915.312			
22046		11102+05.36	570,034.383	2,456,912.171															
	12TH STREET																		
22504		4598+50.00	569,343.898	2,457,308.898															
22505		4601+61.40	569,655.251	2,457,303.482															
	13TH STREET																		
22056		13100+00.00	569,644.992	2,457,647.476															
22057								13101+46.55	569,791.420	2,457,641.538	13102+29.20	569,874.001	2,457,638.190	13103+10.22	569,950.650	2,457,607.278			
22058		13103+22.14	569,961.702	2,457,602.822															
	14TH STREET																		
22105		13+30.00	570,488.551	2,458,476.221															
22105								15+51.84	570,474.037	2,458,254.853	16+80.23	570,465.638	2,458,126.745	17+51.53	570,593.924	2,458,121.769			
22120		20+06.18	570,848.384	2,458,111.899															
22125		27+35.00	571,577.037	2,458,096.363															
	15TH STREET																		
22205		100+00.00	569,486.215	2,458,559.458															
22210		110+00.00	570,485.771	2,458,529.668															
	16TH STREET																		
22255		99+35.00	569,694.498	2,458,962.784															
22260		105+88.53	570,347.770	2,458,944.397															

SUPERELEVATION DATA

See PV-300 Series

Road Identification	Circular Curve or Spiral Curve Name	Radius	Superelevation Data			Standard Road Plan	Section A-A	Section B-B	Section C-C	Section D-D	Section E-E	Section F-F	Case A	Case B	Case C	Case S	Case T	Case U	Remarks
			e	L	x														
		FT	%	FT	FT														
US 67 RAMP D	20155	3200	2.8	71	52	PV-303	4499+27.84	4499+79.84	4500+29.54	4500+50.84									
							4504+97.16	4504+45.16	4503+95.46	4503+74.16									

111-01
04-17-12

COORDINATED OPERATIONS

Other work in progress during the same period of time will include the construction of the projects listed. Coordinate operations with those of other contractors working within the same area.

Project	Type of Work
BRFIM-074-1(197)5--05-82	EB and WB Approach Spans - River Bridge
BRFIM-074-1(198)5--05-82	EB and WB Main Arch Spans - River Bridge
IM-074-1(206)5--13-82	PCC Pavement-Grade and Replace
IM-074-1(207)5--13-82	PCC Pavement-Grade and Replace
IM-074-1(219)5--13-82	Signing
IM-074-1(220)5--13-82	Signing
IMN-074-1(208)5--0E-82	Light Pole Supply
IMN-074-1(209)5--0E-82	Luminaire Supply
ITS-074-1(221)5--25-82	ITS Deployment and Integration
ITS-074-1(222)5--25-82	Fiber Optics
IMN-74-1(235)5--0E-82	Aesthetic Lighting Supply
IMN-74-1(241)5--0E-82	Structural Health Monitoring

108-23A
08-01-08

TRAFFIC CONTROL PLAN

1. Traffic is to be maintained on I-74 mainline and ramps at all times per Roadway Contract IM-74-1(207)5--13-82. Temporary Barrier rail, pavement markings, and traffic control devices included in the Roadway plans shall be maintained by the Roadway Contractor. The Bridge Contractor shall not remove, relocate, or alter these traffic control devices without approval from the Engineer.

2. Traffic is to be maintained on Gilbert Street at all times. Temporary Closures to set girders shall be between midnight and 5 AM, as required, and according to Standard Road Plan TC 451. No closures of Mississippi Boulevard will be allowed during closures of Gilbert Street. Detour route signing is to be placed by the Bridge Contractor prior to closure. Detour signing shall be furnished, placed, maintained and removed by the Bridge Contractor.

3. Traffic is to be maintained on Grant Street (US 67) at all times. Temporary Closures to set girders shall be between midnight and 5 AM, as required, and according to Standard Road Plan TC 451. No closures of Mississippi Boulevard will be allowed during closures of Grant Street. Detour route signing is to be placed by the Bridge Contractor prior to closure. Detour signing shall be furnished, placed, maintained and removed by the Bridge Contractor.

4. Traffic is to be maintained on Mississippi Boulevard at all times. Temporary Closures to set girders shall be between 7 PM and 6 AM, as required, and according to Standard Road Plan TC 251. No closures of Gilbert Street or Grant Street will be allowed during closures of Mississippi Boulevard. Detour route signing is to be placed by the Bridge Contractor prior to closure. Detour signing shall be furnished, placed, maintained and removed by the Bridge Contractor. Sidewalks with ADA accessibility shall be maintained while Mississippi Boulevard is open to traffic.

5. Temporary closures shall be limited to 20 minutes or less per TC-251 and TC-451.

6. Sidewalk must remain open on at least one side of US 67 during construction.

100-1D
10-18-05

ITS PROJECT DESCRIPTION

INTELLIGENT TRANSPORTATON SYSTEMS (ITS) PROJECT WORK SUMMARY

EB VIADUCT PROJECT BRFIM-074-1(200)5--05-82 INVOLVES FURNISHING AND INSTALLING ITS INFRASTRUCTURE. ITS WORK INCLUDES FURNISHING AND INSTALLING CONDUIT, HANDHOLES, JUNCTION BOXES, CABINETS, STEEL ITS POLES, AND ITS ELECTRICAL CIRCUITS.

LISTING OF ITS CONDUIT WORK

Conduit Run	Location		Conduit Length	Install 1" Conduit RGS	Install 2" Conduit RGS	Install 3" Conduit RGS	Install 2" HDPE Conduit Bored	Install 2" HDPE Conduit Plowed	Install 3" HDPE Conduit Plowed	Install Cable #4	Install Cable #8	Install Cable #12	Pull Tape*	
	From	To												
14E-1	JB14-2E/JB14-P2E	JB14-D2	150		4	1							5	
14E-2	JB14-D2	JB14-3/JB14-P3	140		4	1							5	
14F	JB14-3/JB14-P3	ITS POLE 6	15**	2**						2	1		1	
14G-1	JB14-3/JB14-P3	JB14-D3	145		4	1				3			5	
14G-2	JB14-D3	JB14-4/JB14-P4	135		4	1				3			5	
14H-1	HH14-7E/HH14-P5E	PIER FOUNDATION	20					2	1	3		1		
14H-2	PIER FOUNDATION	JB14-4/JB14-P4	55++		2++	1++				3		1		
14I-1	HH14-7E	CABINET 41J	15					1				1		
14I-2	HH14-P5E	CABINET 41J	15					1			3			
14J	JB14-4	JB14-5	125		3								3	
14K-1	HH14-6E	PIER FOUNDATION	20					1				1		
14K-2	PIER FOUNDATION	JB14-5	50++		1++							1		
14L-1	HH14-6E	CABINET 42J	15					1				1		
14L-2	HH14-P6E	CABINET 42J	15					1		2	1			
14M-1	JB14-5	JB14-D4	135		3								3	
14M-2	JB14-D4	JB15-1	555		3								3	
14N	HH14-7E/HH14-P5E	HH14-6E/HH14-P6E	130				2			2	1	1		
14O	HH14-7E	HH14-D12	470					1				1		
14P	HH14-D12	ELECTRICAL RACK	15					1				1		
14AD	JB14-D2	CCTV MOUNT	15	1									1	
14AE	JB14-3	CCTV MOUNT	15	1									1	
14AF	JB14-3	CCTV MOUNT	100	1									1	
14AG	JB14-D3	CCTV MOUNT	15	1									1	
14AH	JB14-4	CCTV MOUNT	15	1									1	
14AI	HH14-P5E	ELECTRICAL RACK	15							4	2			
14AL	JB14-D4	CCTV MOUNT	15	1									1	
14AM	HH14-D12	ITS POLE 7	120					1				1		
14AN	HH14-D12	ITS POLE 8	90					1				1		
15A-1	JB15-1	PIER FOUNDATION	35++		3++							3		
15A-2	PIER FOUNDATION	HH15-5E	20					3				3		

** INCIDENTAL TO PAY ITEM "HIGH PERFORMANCE STRUCTURAL CONCRETE"; SEE DESIGN 3408.
++ INCIDENTAL TO PAY ITEM "HP SELF-CONSOLIDATING CONCRETE (HP-SCC)"; SEE DESIGN 3408.

* INCIDENTAL TO CONDUIT

LISTING OF ITS HANDHOLE & JUNCTION BOX WORK

LABEL	STATION	OFFSET	TYPE	#4 Power Coil	#8 Power Coil	
JB14-2E*	IN HANGER	SYSTEM	30"x20"x16"			
JB14-P2E*	IN HANGER	SYSTEM	12"x10"x6"			
JB14-D2	IN HANGER	SYSTEM	10"x8"x4"			
J14-3	IN HANGER	SYSTEM	30"x30"x16"			
JB14-P3	IN HANGER	SYSTEM	12"x10"x6"	2X5ft		
JB14-D3	IN HANGER	SYSTEM	10"x8"x4"			
JB14-4	IN HANGER	SYSTEM	30"x30"x16"			
JB14-P4	IN HANGER	SYSTEM	12"x10"x6"			
JB14-5	IN HANGER	SYSTEM	30"x30"x16"			
JB14-D4	IN HANGER	SYSTEM	10"x8"x4"			
HH14-7E*	FIELD VERIFY	LOCATION	TYPE III			
HH14-P5E*	FIELD VERIFY	LOCATION	TYPE I	4X5ft	2X5ft	
HH14-6E*	FIELD VERIFY	LOCATION	FOR27			
HH14-P6E*	FIELD VERIFY	LOCATION	TYPE I	2X5ft		
HH14-D12	6782+70	140 LT	TYPE III			
JB15-1	IN HANGER	SYSTEM	30"x30"x16"			
HH15-5E*	FIELD VERIFY	LOCATION	TYPE III			

* EXISTING HANDHOLES AND JUNCTION BOXES BY OTHERS.

LISTING OF ITS CABINET WORK

Cabinet Label	Sheet Number	Cabinet Size	Pole Mount	Pad Mount
CABINET 39J	N.3	36"x24"x17"	X	
CABINET 41J	N.3	36"x24"x17"		X
CABINET 42J	N.3	36"x24"x17"		X

ITS DESIGN

I hereby certify that this engineering document was prepared by me or under my direct personal supervision and that I am a duly licensed Professional Engineer under the laws of the State of Iowa.

Signature Date
STEVEN GARBE, P.E.
Printed or Typed Name
My license renewal date is December 31, 20 16

Pages or sheets covered by this seal: N.1 - N.18

ITS QUANTITIES

GENERAL NOTES

1. THE CONTRACTOR'S BID SHALL INCLUDE ALL LABOR, EQUIPMENT, AND MATERIAL NECESSARY TO PROVIDE A COMPLETE AND FUNCTIONAL ITS INSTALLATION IN CONFORMANCE WITH THE PLANS AND SPECIFICATIONS.

2. THE PLAN LOCATIONS OF UNDERGROUND UTILITIES, WHEN SHOWN, ARE APPROXIMATE ONLY. IN ADDITION, A PORTION OF UTILITY INFORMATION MAY NOT HAVE BEEN PROVIDED. ALL UTILITIES SHALL BE LOCATED AND MARKED PRIOR TO CONSTRUCTION. THE CONTRACTOR SHALL BE RESPONSIBLE FOR CONTACTING UTILITIES AND LOCATOR SERVICES AND SCHEDULING THE LOCATION OF UNDERGROUND UTILITIES. THE CONTRACTOR SHALL ALSO CONTACT ANY AND ALL UTILITIES AND LOCAL GOVERNMENT AGENCIES NOT PARTICIPATING IN LOCATION SERVICES.

3. PROPOSED ITS EQUIPMENT LOCATIONS ARE APPROXIMATE AND MAY REQUIRE MODIFICATION TO AVOID CONFLICTS WITH UNDERGROUND UTILITES OR OTHER OBSTRUCTIONS. IT SHALL BE THE CONTRACTOR'S RESPONSIBILITY TO DETERMINE ANY CONFLICTS WITH EXISTING UTILITIES AT SITES IN THE FIELD PRIOR TO INITIATION OF CONSTRUCTION AT THAT SITE. AS THE CCTV AND SENSOR LOCATIONS ARE LOCATION SENSITIVE, THE CONTRACTOR SHALL RECEIVE WRITTEN APPROVAL FROM THE ENGINEER PRIOR TO REVISING THE PLAN LOCATION OF ANY CONDUIT, POLES, FOUNDATIONS, OR CABINETS.

4. ABOVE GROUND RISERS SHALL BE RIGID STEEL CONDUIT. ALL OTHER CONDUIT SHALL BE HDPE CONDUIT. RIGID P.V.C. CONDUIT (SCHEDULE 40 OR AS APPROVED) MAY BE SUBSTITUTED FOR CONDUIT RUNS UNDER 50 FEET.

5. ANY AND ALL IMPROVEMENTS SUCH AS ASPHALT OR CONCRETE PAVEMENTS, CURBS, GUTTERS, WALKS, DRAINAGE DITCHES, CULVERTS, DRAIN TILES, EMBANKMENTS, SHRUBS, TREES, GRASS, SOD, ETC., IF DAMAGED, SHALL BE RESTORED TO PRE-CONSTRUCTION CONDITIONS (OR BETTER) AS DIRECTED BY THE ENGINEER.

6. IT SHALL BE THE CONTRACTOR'S RESPONSIBILITY TO REPAIR EXISTING CONDUIT, CONDUCTORS, OR OTHER FACILITIES DAMAGED DURING CONSTRUCTION. ALL EXISTING INFRASTRUCTURE REMOVED OR DAMAGED BY THE CONTRACTOR SHALL BE REPLACED IN KIND BY THE CONTRACTOR, WITH NO ADDITIONAL COMPENSATION.

7. THE CONTRACTOR SHALL NOT DISTURB ANY EXISTING UTILITIES EXCEPT AS SPECIFICALLY DEFINED WITHIN THE SCOPE OF WORK FOR THIS CONTRACT. WHERE WORK AFFECTS OR IS AFFECTED BY THE EXISTING UTILITIES, THE WORK SHALL BE COORDINATED WITH THE UTILITY COMPANY AND/OR OWNER. THE CONTRACTOR IS RESPONSIBLE FOR COORDINATING WITH THE DOT.

8. UTILITY COMPANIES WHOSE FACILITIES ARE SHOWN ON THE PLANS OR KNOWN TO BE WITHIN THE CONSTRUCTION LIMITS SHALL BE NOTIFIED BY THE CONTRACTOR OF THE STARTING CONSTRUCTION DATE.

9. ALL ITS CONDUITS SHALL INCLUDE ONE POLYPROPYLENE PULL ROPE WITH A MINIMUM 2,670N PROPER TENSILE STRENGTH (COST INCIDENTAL TO THE CONDUIT).

10. ALL CONDUIT SHALL BE PLACED AT A 48 INCH MINIMUM COVER UNLESS OTHERWISE SPECIFIED ON THE PLANS.

11. THE CONTRACTOR SHALL BORE UNDER ANY EXISTING ASPHALT OR CONCRETE PAVEMENT, RAILROAD, OR OTHER STRUCTURE.

12. THE CONTRACTOR SHALL TRENCH ALL CONDUIT WHERE EXISTING CONDITIONS ALLOW UNLESS OTHERWISE SPECIFIED ON THE PLANS. THE CONTRACTOR MAY BORE IN LIEU OF TRENCHING AT THE CONTRACTOR'S EXPENSE.

13. THE MINIMUM BENDING RADIUS OF CONDUIT AND MULTIDUCT SYSTEMS SHALL BE THE LARGER OF THE FIBER OPTIC CABLE MANUFACTURER'S RECOMMENDATION OR NATIONAL ELECTRIC CODE (NEC) REQUIREMENTS. ALL CONDUIT SWEEP RADII SHALL BE GREATER AND/OR EQUAL TO 15 INCHES.

14. ALL WIRING AND GROUNDING SYSTEMS SHALL BE IN ACCORDANCE WITH THE NATIONAL ELECTRIC CODE.

GENERAL NOTES

15. THIS PROJECT DOES NOT INCLUDE PURCHASING, OR INSTALLTION OF, ANY CAMERA OR SENSOR EQUIPMENT.

16. LINEAR MEASUREMENTS ARE TAKEN BETWEEN POLE BASE, HANDHOLE, AND JUNCTION BOX CENTERS AND DO NOT INCLUDE ALLOWANCES FOR VERTICAL RISES OR SPLICES.

17. MATERIALS AND CONSTRUCTION SHALL CONFORM TO THE REQUIREMENTS OF ALL APPLICABLE SECTIONS INCLUDING BUT NOT LIMITED TO SECTION 2523 AND 2525 OF THE "IOWA DEPARTMENT OF TRANSPORTATION STANDARD SPECIFICATIONS FOR HIGHWAY AND BRIDGE CONSTRUCTION, SERIES 2015" PLUS CURRENT SUPPLEMENTAL SPECIFICATIONS AND SPECIAL PROVISIONS.

18. IT SHALL BE THE CONTRACTOR'S RESPONSIBILITY TO ANTICIPATE, COMMUNICATE, AND COORDINATE THIS WORK WITH ADJACENT CONSTRUCTION PROJECTS THAT INCLUDE BUT ARE NOT LIMITED TO ADJACENT APPROACH BRIDGE, VIADUCT, AND ROADWAY PROJECTS.

19. SOME OF THE ITS ELECTRICAL CIRCUITS IN PROJECT BRFIM-074-1(200)5--05-82 ARE SERVICED BY THE PROPOSED POINT OF SERVICE ON LADY LUCK PKWY LOCATED WITHIN THE PROJECT BRFIM-074-1(199)5--05-82 LIMITS. THE PROJECT BRFIM-074-1(199)5--05-82 CONTRACTOR SHALL NOTIFY THE PROJECT BRFIM-074-1(200)5--05-82 CONTRACTOR WHEN THE POINT OF SERVICE IS ACCESSIBLE THROUGH THE WB VIADUCT ITS INFRASTRUCTURE.

20. THE ITS ELECTRICAL CIRCUITS IN PROJECT BRFIM-074-1(197)5--05-82 (APPROACH BRIDGES) ARE SERVICED BY THE PROPOSED POINT OF SERVICE ON LADY LUCK PKWY LOCATED WITHIN THE PROJECT BRFIM-074-1(199)5--05-82 LIMITS. THE PROJECT BRFIM-074-1(200)5--05-82 CONTRACTOR SHALL NOTIFY THE PROJECT 197 CONTRACTOR WHEN THE POINT OF SERVICE IS ACCESSIBLE THROUGH THE EB VIADUCT ITS INFRASTRUCTURE.

21. CONTRACTOR SHALL FURNISH AND INSTALL CONDUIT EXPANSION FITTINGS AT A MINIUMUM OF EVERY 300 FEET AND AT EVERY JUNCTION BOX IN THE PVC COATED RIGID GALVANIZED STEEL CONDUIT SPECIFIED IN THE HANGER SYSTEM FOR THIS PROJECT.

22. CONTRACTOR SHALL FURNISH AND INSTALL AT LEAST ONE EXPANSION FITTING PER VERTICAL CONDUIT RUN.

23. GALVANIZED HINGED EXTENSION SPLIT CONDUIT CLAMPS SHALL BE USED TO SECURE AND SUPPORT CONDUIT ATTACHED TO PIERS. CONDUIT SHALL BE SECURED AND SUPPORTED IN ACCORDANCE WITH THE NATIONAL ELECTRIC CODE. COST OF CONDUIT CLAMPS IS INCLUDED IN THE COST OF THE CONDUIT.

24. ALL MECHANICAL CONCRETE ANCHORS OR MECHANICAL INSERTS SHALL CONFORM TO MATERIALS IM 453.09. ALL COMPONENTS OF THE ATTACHMENT ASSEMBLIES TO CONCRETE SHALL BE HOT DIP OR MECHANICALLY GALVANIZED STEEL ONLY. ELECTRODEPOSITED ZINC COATING WILL NOT BE ALLOWED. ALL CONCETE ANCHORS SHALL BE POST-INSTALLED MECHANICAL CONCRETE ANCHORS OR CAST-IN-PLACE INSERTS. CONTRACTOR SHALL AVOID ALL REINFORCING WHEN DRILLING HOLES FOR CONCRETE ANCHORS. COST OF CONCRETE ANCHORS FOR PIERS IS INCLUDED IN THE COST OF PIER CONCRETE.

25. CONCRETE INSERTS, HANGER RODS, AND ALL HANGER SYSTEM HARDWARE SHALL BE GALVANIZED IN ACCORDANCE WITH THE STANDARD SPECIFICATIONS. SEE P SHEETS FOR ADDITIONAL INFORMATION REGARDING THE HANGER SYSTEM.

26. FIELD WELDING OF ITS ATTACHMENTS TO THE VIADUCT STRUCTURE IS NOT ALLOWED.

GENERAL NOTES

INFRASTRUCTURE

- PLOWED CONDUIT
- BORED CONDUIT
- FIBER TERMINATION CABINET
- CABINET
- STEP DOWN TRANSFORMER
- HANDHOLE (COMM)
- HANDHOLE (POWER)
- JUNCTION BOX (COMM)
- JUNCTION BOX (POWER)
- 45 FOOT ITS POLE
- POWER SOURCE (BY OTHERS)
- METER PEDESTAL (BY OTHERS)

DEVICES*

- MOTOR VEHICLE DETECTOR SENSOR (MVDS)
- ITS CLOSED CIRCUIT TELEVISION CAMERA (CCTV)
- NON-ITS CLOSED CIRCUIT TELEVISION CAMERA (SSTV)

*SEE NOTE 15.

ITS GENERAL NOTES

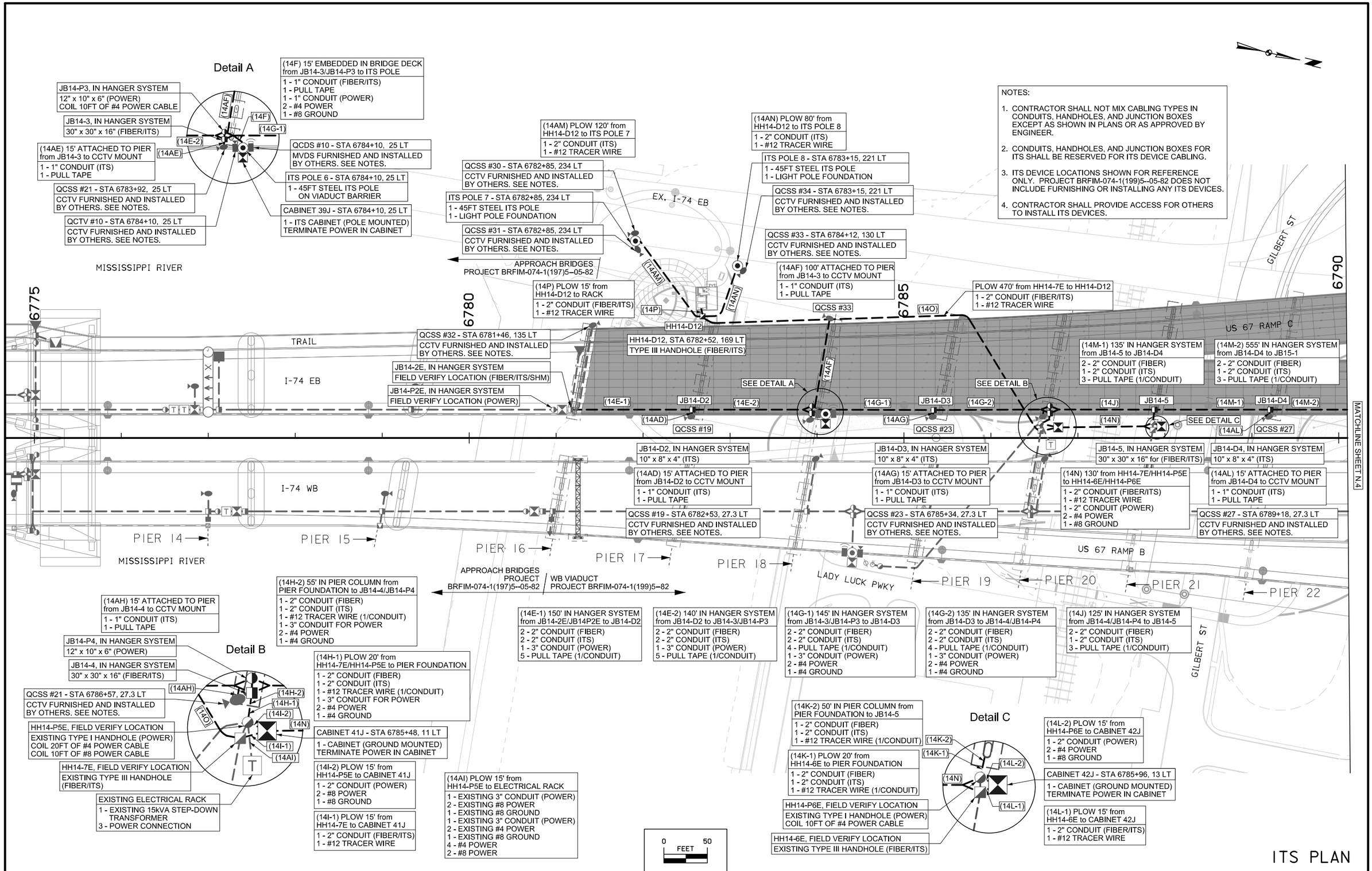

ENGLISH	IOWA DOT	DESIGN TEAM ITERIS	SCOTT COUNTY	PROJECT NUMBER BRFIM-074-1(200)5--05-82	SHEET NUMBER N.3

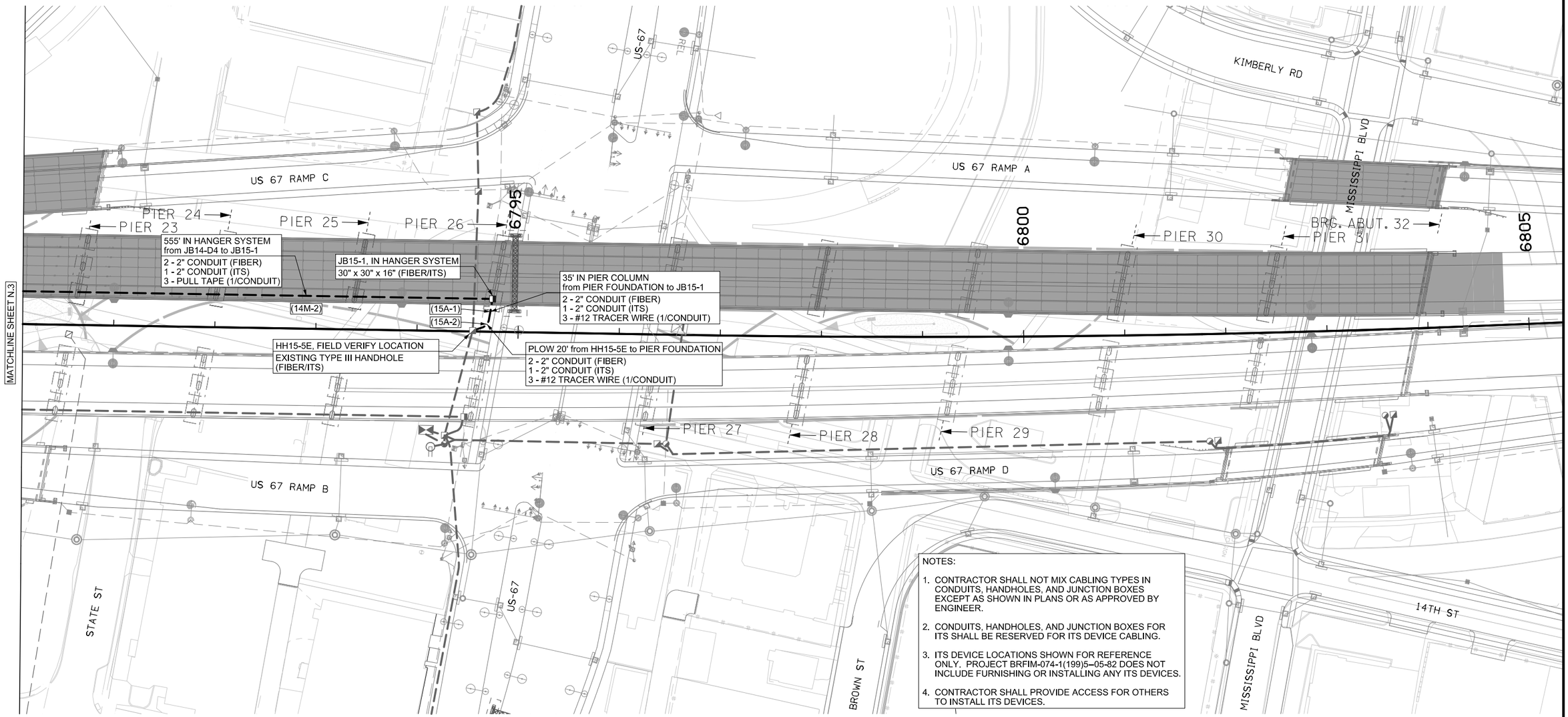

NOTES:

1. CONTRACTOR SHALL NOT MIX CABLING TYPES IN CONDUITS, HANDHOLES, AND JUNCTION BOXES EXCEPT AS SHOWN IN PLANS OR AS APPROVED BY ENGINEER.
2. CONDUITS, HANDHOLES, AND JUNCTION BOXES FOR ITS SHALL BE RESERVED FOR ITS DEVICE CABLING.
3. ITS DEVICE LOCATIONS SHOWN FOR REFERENCE ONLY. PROJECT BRFIM-074-1(199)5--05-82 DOES NOT INCLUDE FURNISHING OR INSTALLING ANY ITS DEVICES.
4. CONTRACTOR SHALL PROVIDE ACCESS FOR OTHERS TO INSTALL ITS DEVICES.

0 FEET 50

ITS PLAN

ENGLISH	IOWA DOT	DESIGN TEAM ITERIS	SCOTT COUNTY	PROJECT NUMBER BRFIM-074-1(200)5--05-82	SHEET NUMBER N.4

GENERAL NOTES

1. MATERIALS AND METHODS OF CONSTRUCTION SHALL BE IN ACCORDANCE WITH CURRENT STANDARDS AND SUPPLEMENTAL SPECIFICATIONS.
2. CABINET HARDWARE SHALL BE INSTALLED PER MANUFACTURER'S RECOMMENDATIONS.
3. USE TYPE 316 STAINLESS STEEL FOR ALL CABINET MOUNTING HARDWARE.
4. USE 3/4" WIDE AND 0.03" THICK BANDING FOR POLE MOUNTED CABINETS.

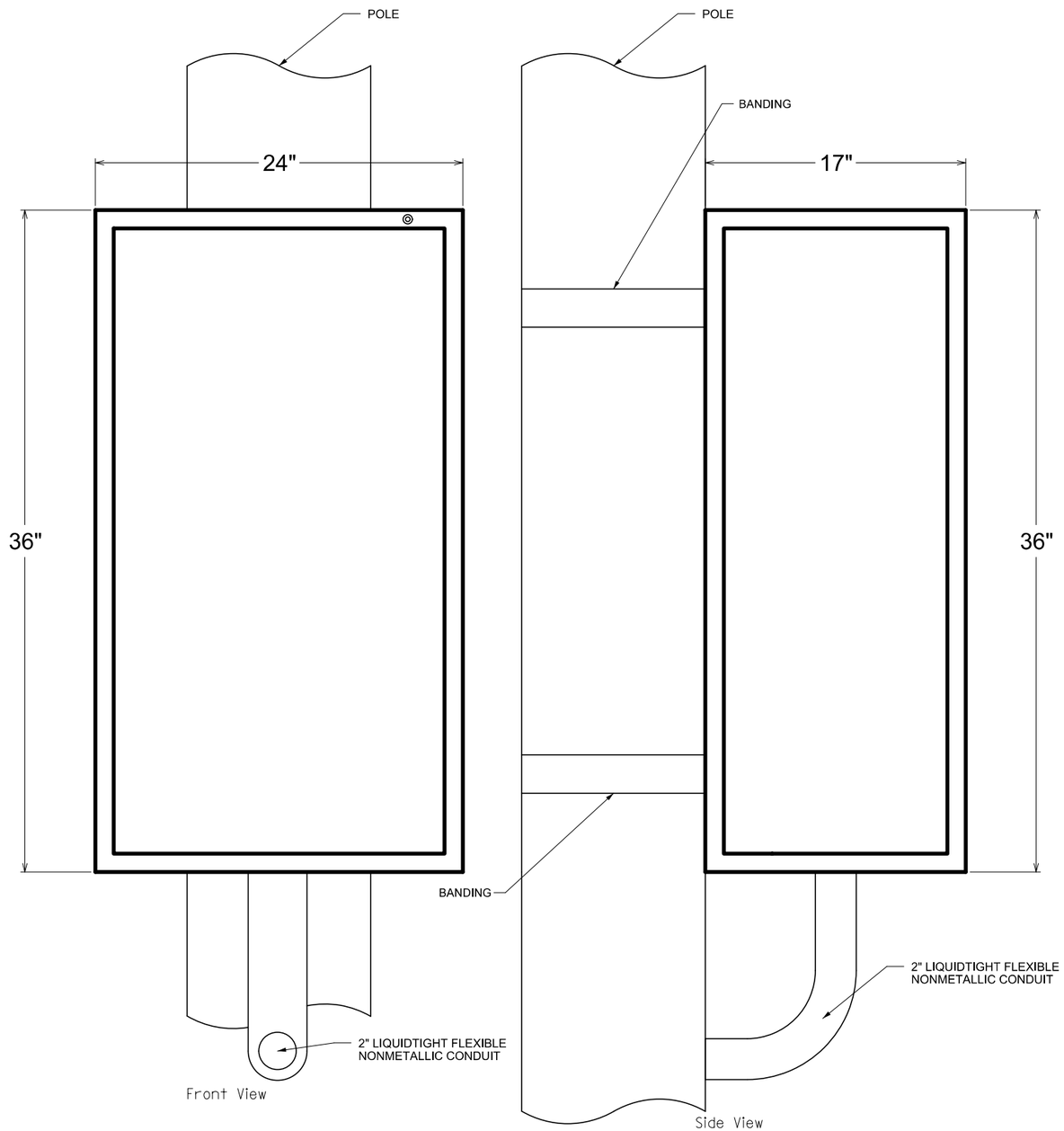

POLE MOUNTED DEVICE CABINET

NOT TO SCALE

TYPICAL POLE MOUNTED CABINET ITS DETAIL

GENERAL NOTES

1. MATERIALS AND METHODS OF CONSTRUCTION SHALL BE IN ACCORDANCE WITH CURRENT STANDARDS AND SUPPLEMENTAL SPECIFICATIONS.
2. FOUNDATION MUST BE INSTALLED PRIOR TO TRENCHING AND WITHOUT PILOT HOLE.
3. FOUNDATION MUST BE INSTALLED WITH BASEPLATE LEVEL AND FLUSH WITH FINISHED GRADE.
4. CABINET HARDWARE SHALL BE INSTALLED PER MANUFACTURER'S RECOMMENDATIONS.
5. USE TYPE 316 STAINLESS STEEL FOR ALL CABINET MOUNTING HARDWARE.
6. FOR INSTALLATION OF CABINET TO PEDESTAL, USE 1/2" X 1-1/4" BOLTS WITH TWO FENDER WASHERS AND ONE LOCK WASHER INSTALLED WITH NUT ON TOP.
7. ALL ITS CABINET FOOTINGS SHALL INCLUDE A FULL DEPTH 4 FEET SQUARE CONCRETE MAINTENANCE PAD AREA THAT IS CAST AND REINFORCED AS A SINGLE UNIT WITH THE CABINET PEDESTAL.
8. CONTRACTOR SHALL PREPARE AND SUBMIT FOR ENGINEER APPROVAL, DESIGN PLANS AND DETAILS FOR ALL CABINET FOOTINGS AT NO ADDITIONAL COST TO THE ENGINEER. SUCH PLANS AND DETAILS SHALL BE SEALED BY A PROFESSIONAL ENGINEER LICENSED IN THE STATE OF IOWA.
9. ANY DEVIATION FROM ABOVE INSTALLATION PROCEDURES MUST BE APPROVED BY ENGINEER.

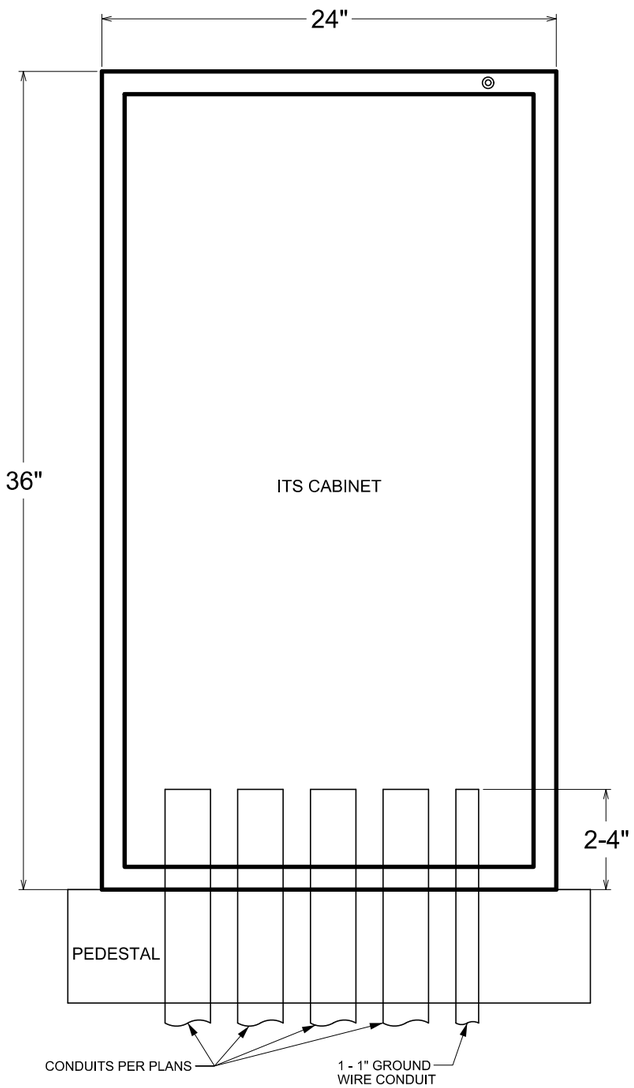

CABINET FRONT VIEW

NOT TO SCALE

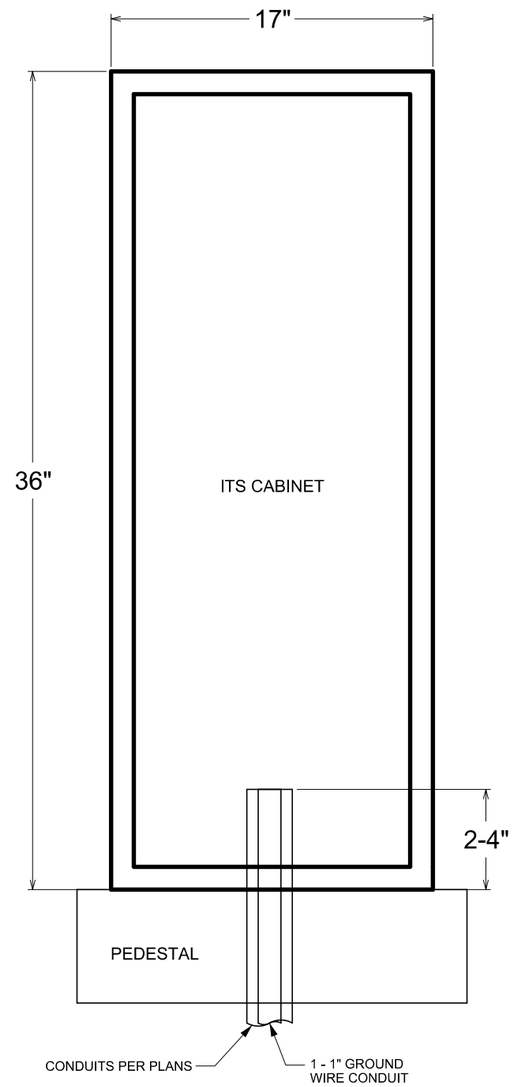

CABINET SIDE VIEW

NOT TO SCALE

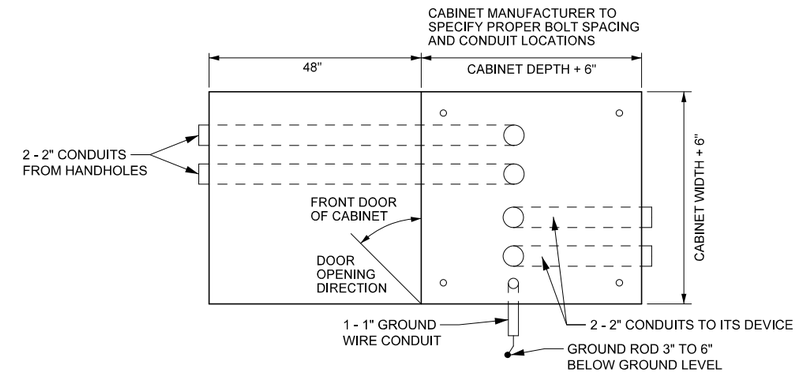

CABINET FOOTING TOP VIEW

NOT TO SCALE

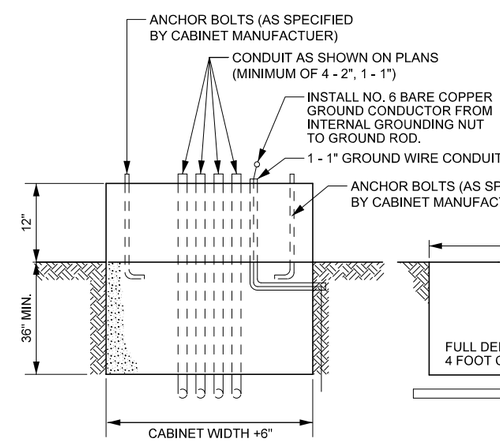

CABINET FOOTING FRONT VIEW

NOT TO SCALE

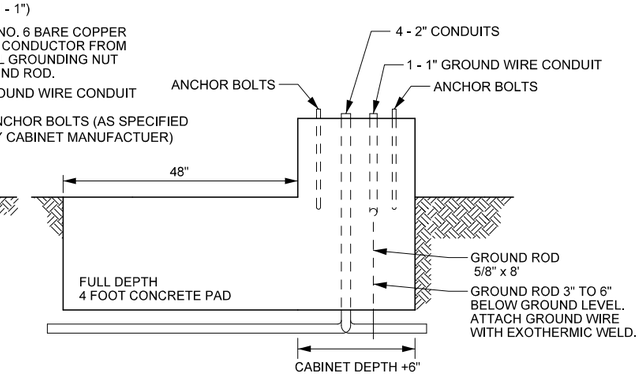

CABINET FOOTING SIDE VIEW

NOT TO SCALE

TYPICAL PEDESTAL MOUNTED CABINET ITS DETAIL

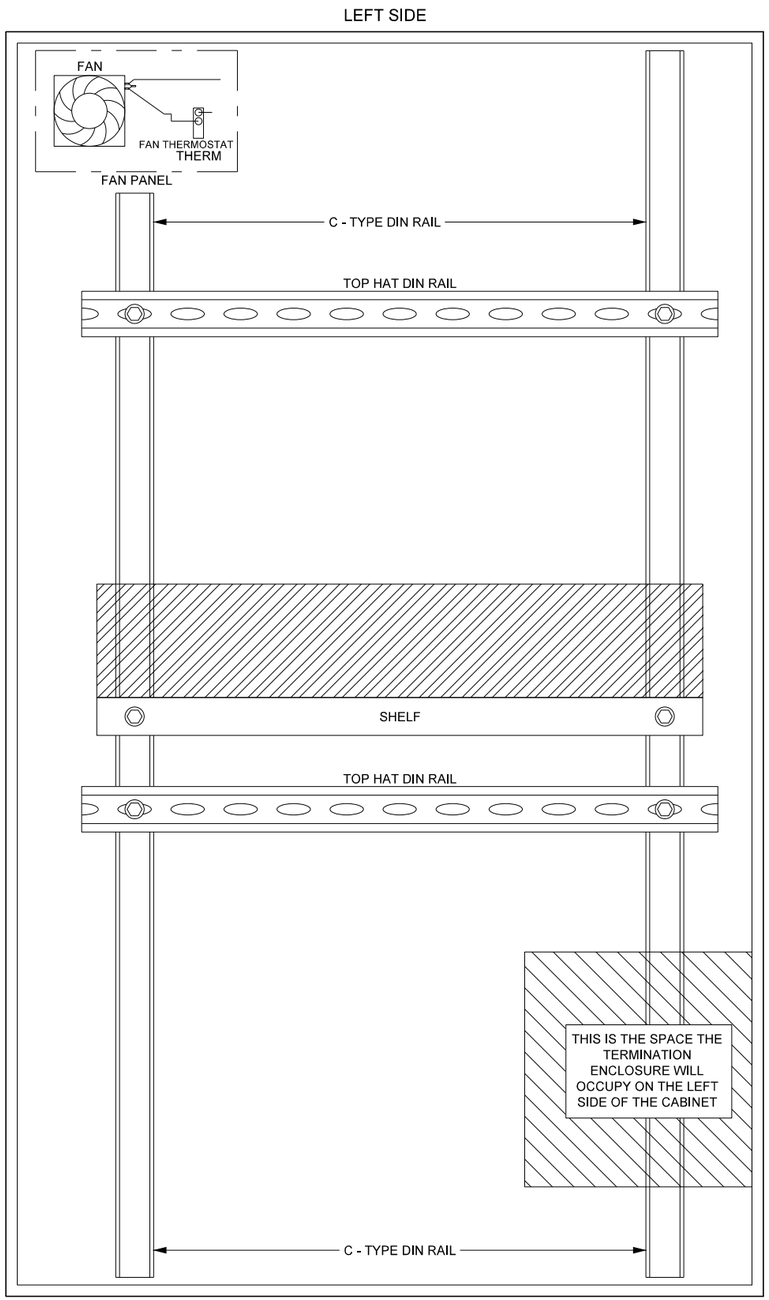

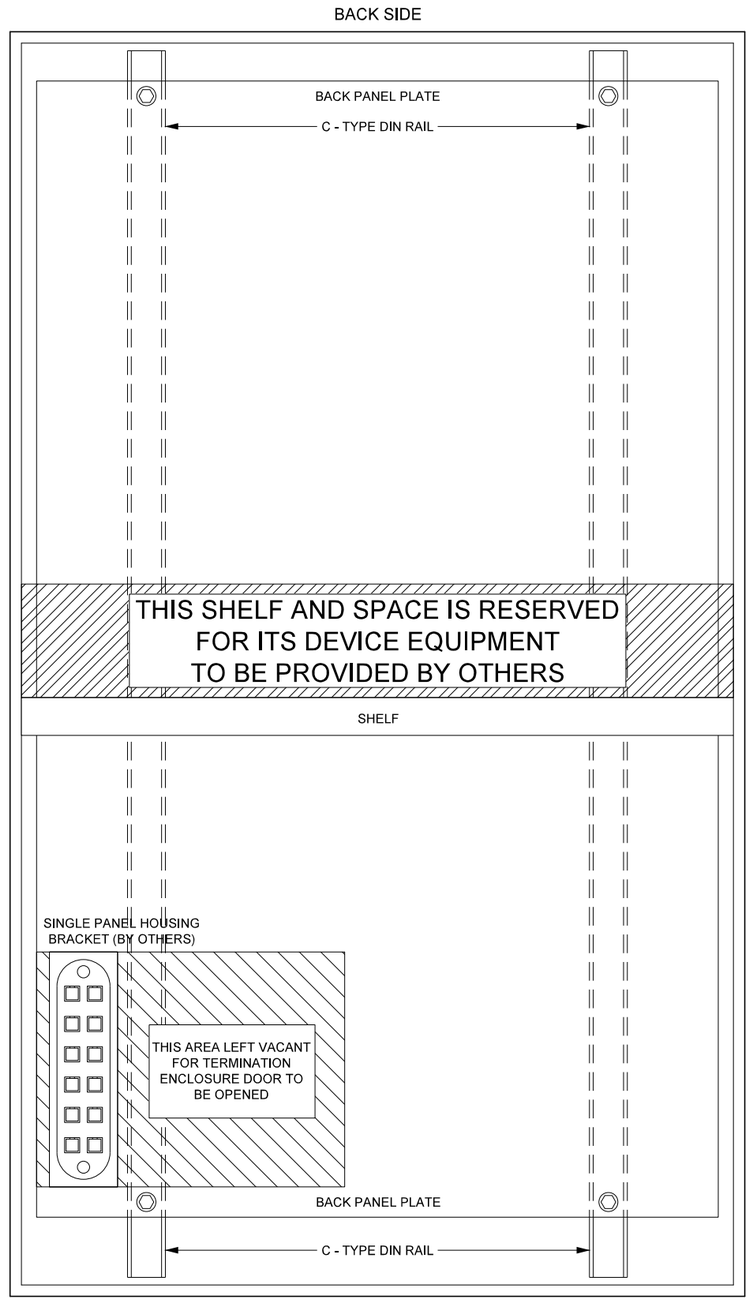

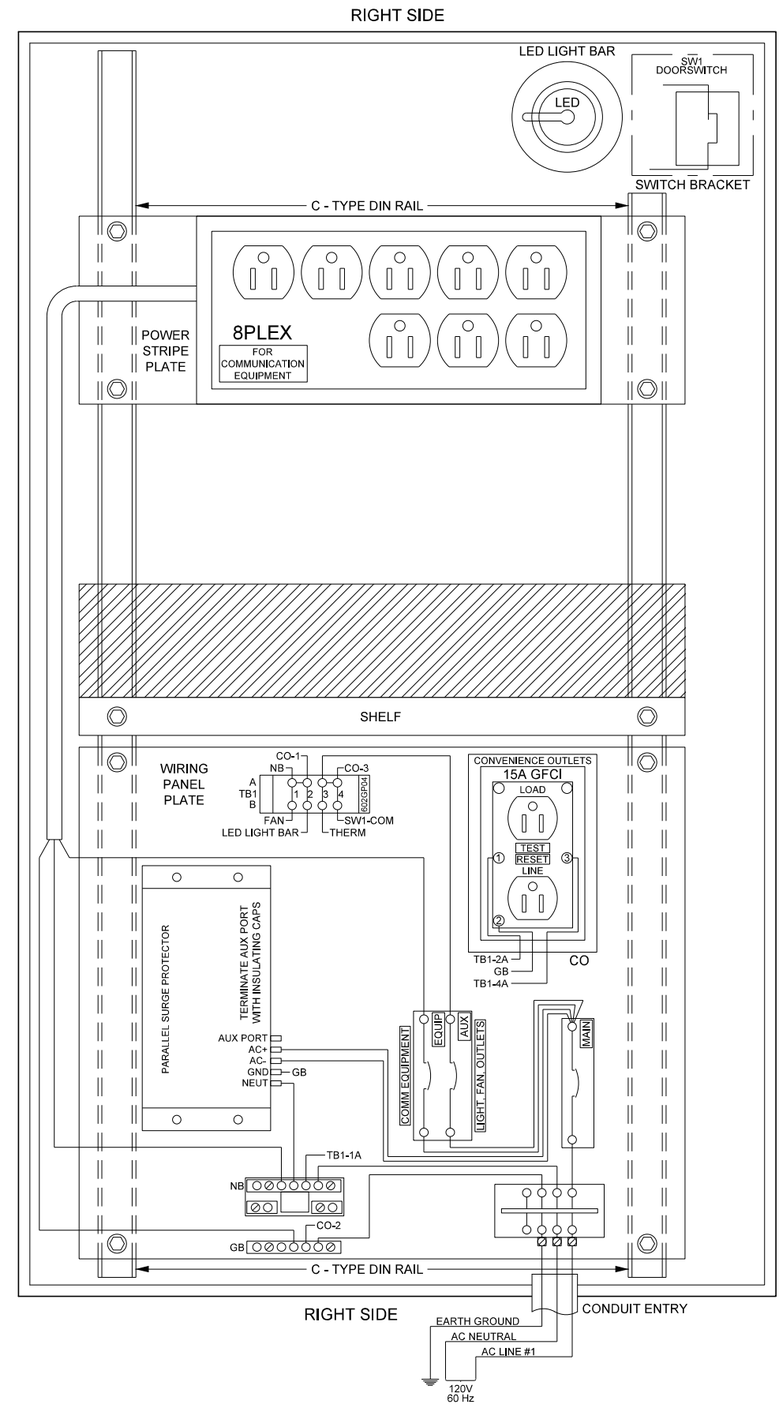

DEVICE CABINET LAYOUT

NOT TO SCALE

GENERAL NOTES

1. MATERIALS AND METHODS OF CONSTRUCTION SHALL BE IN ACCORDANCE WITH CURRENT STANDARDS AND SUPPLEMENTAL SPECIFICATIONS.

TYPICAL 120V CABINET WIRING ITS DETAIL

ENGLISH	IOWA DOT	DESIGN TEAM ITERIS	SCOTT COUNTY	PROJECT NUMBER BRFIM-074-1(200)5--05-82	SHEET NUMBER N.7

GENERAL NOTES

1. MATERIALS AND METHODS OF CONSTRUCTION SHALL BE IN ACCORDANCE WITH CURRENT STANDARDS AND SUPPLEMENTAL SPECIFICATIONS.
2. HANGER RODS ARE INCIDENTAL TO CONDUIT.
3. CONCRETE INSERTS FOR DECK HANGERS ARE INCIDENTAL TO BARRIER RAIL.
4. CONTRACTOR SHALL FURNISH AND INSTALL EXPANSION FITTINGS AT A MINIMUM OF EVERY 300 FEET AND AT EVERY JUNCTION BOX LOCATION.

GENERAL NOTES

5. CONTRACTOR SHALL SHALL NOT MIX CABLING TYPES IN CONDUITS EXCEPT AS SHOWN IN PLANS OR AS APPROVED BY ENGINEER.
6. RECOMMENDED CONDUIT ASSIGNMENTS BASED ON CABLING TYPES:

   CONDUITS 1 AND 2 SHALL BE RESERVED FOR FIBER OPTIC CABLING ONLY.

   CONDUIT 3, 5 SHALL BE RESERVED FOR ITS DEVICE CABLING ONLY. EXAMPLE DEVICE CABLING INCLUDES CCTV, MVDS, RWIS, ETC.

GENERAL NOTES

6. cont'
   CONDUIT 4 SHALL BE RESERVED FOR ELECTRICAL CONDUCTORS ONLY.
7. SOME CABLING TYPES WILL BE FURNISHED AND INSTALLED BY OTHERS.

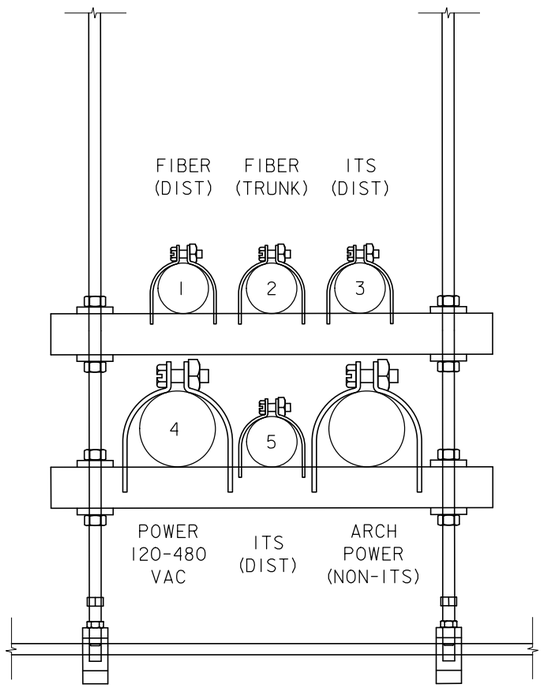

TYPICAL CONDUIT ASSIGNMENTS - SPANS 16-18

NOT TO SCALE - LOOKING NORTH

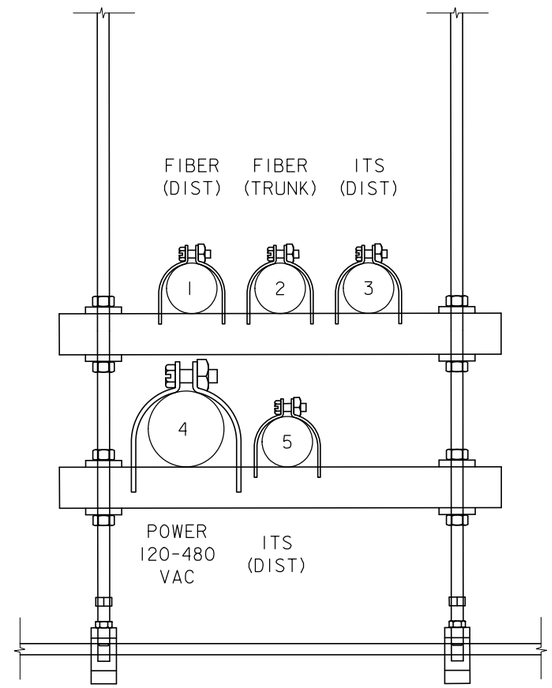

TYPICAL CONDUIT ASSIGNMENTS - SPANS 18-20

NOT TO SCALE - LOOKING NORTH

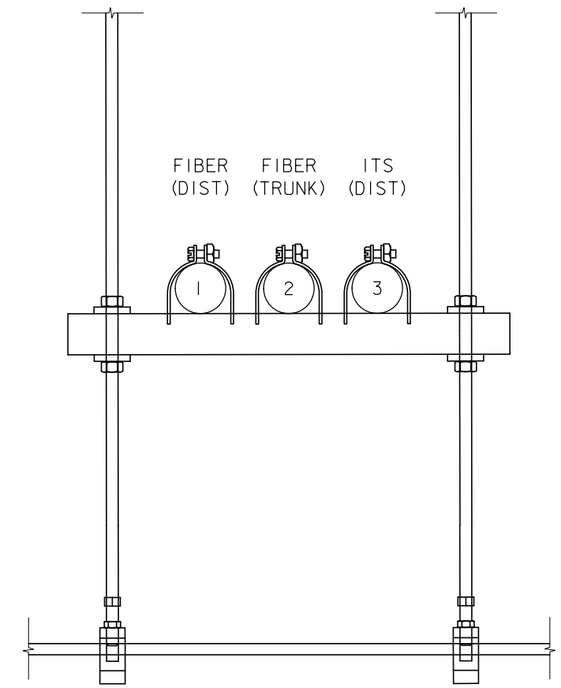

TYPICAL CONDUIT ASSIGNMENTS - SPANS 20-26

NOT TO SCALE - LOOKING NORTH

TYPICAL CONDUIT ASSIGNMENTS ITS DETAIL

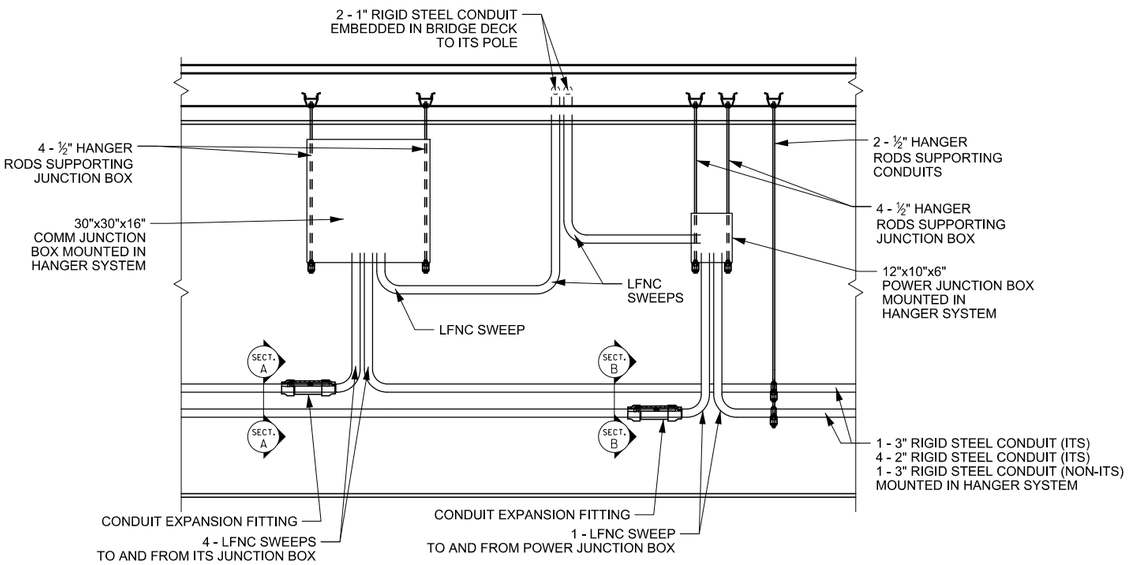

LONGITUDINAL JUNCTION BOX AND CONDUIT DETAIL - SPANS 16-18

NOT TO SCALE - LOOKING WEST

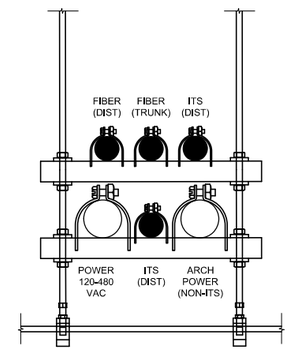

SECTION A-A

NOT TO SCALE
LOOKING NORTH

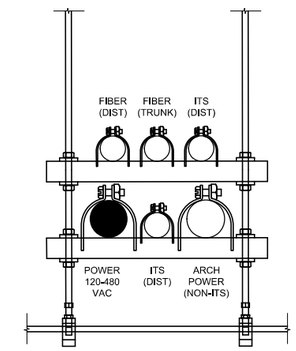

SECTION B-B

NOT TO SCALE
LOOKING NORTH

GENERAL NOTES

1. MATERIALS AND METHODS OF CONSTRUCTION SHALL BE IN ACCORDANCE WITH CURRENT STANDARDS AND SUPPLEMENTAL SPECIFICATIONS.
2. CONCRETE INSERTS, HANGER RODS, AND ALL HANGER HANGER SYSTEM HARDWARE SHALL BE GALVANIZED IN ACCORDANCE WITH THE STANDARD SPECIFICATIONS. SEE P SHEETS FOR ADDITIONAL INFORMATION REGARDING THE HANGER SYSTEM.
3. HANGER RODS ARE INCIDENTAL TO CONDUIT.
4. CONCRETE INSERTS FOR DECK HANGERS ARE INCIDENTAL TO BARRIER RAIL.
5. CONTRACTOR SHALL FURNISH AND INSTALL EXPANSION FITTINGS AT A MINIMUM OF EVERY 300 FEET AND AT EVERY JUNCTION BOX LOCATION.
6. LFNC STANDS FOR LIQUIDTIGHT FLEXIBLE NONMETALLIC CONDUIT. LFNC SWEEPS ARE INCIDENTAL TO RIGID STEEL CONDUIT.

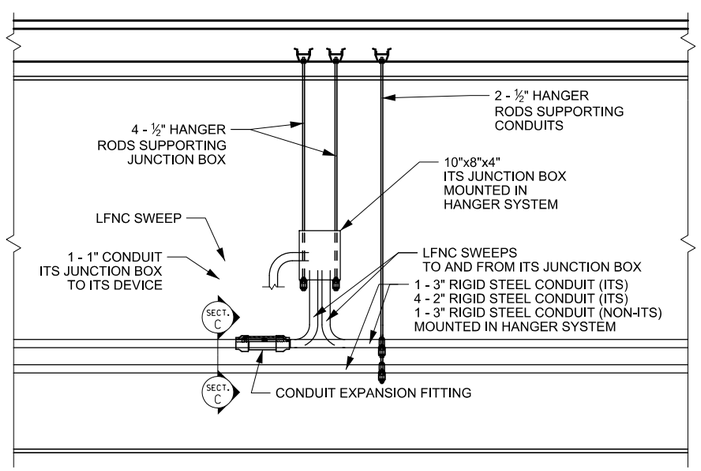

LONGITUDINAL JUNCTION BOX AND CONDUIT DETAIL - SPANS 18-20

NOT TO SCALE - LOOKING WEST

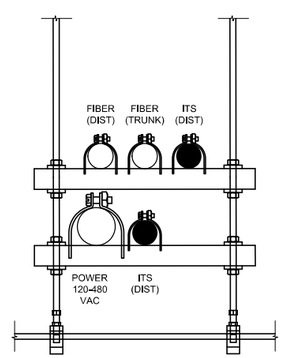

SECTION C-C

NOT TO SCALE
LOOKING NORTH

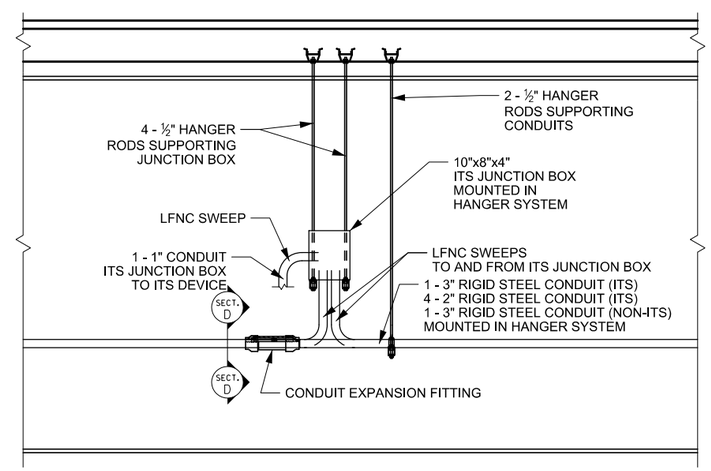

LONGITUDINAL JUNCTION BOX AND CONDUIT DETAIL - SPANS 20-26

NOT TO SCALE - LOOKING WEST

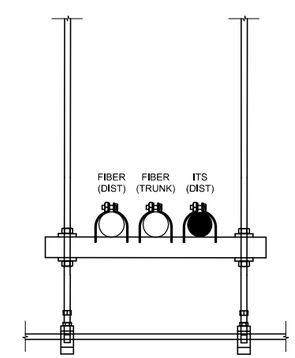

SECTION D-D

NOT TO SCALE
LOOKING NORTH

TYPICAL HANGER SYSTEM ITS DETAIL

GENERAL NOTES

1. MATERIALS AND METHODS OF CONSTRUCTION SHALL BE IN ACCORDANCE WITH CURRENT STANDARDS AND SUPPLEMENTAL SPECIFICATIONS.
2. ALL EXPOSED CONDUIT SHALL BE RIGID GALVANIZED STEEL.
3. ALL WIRING AND GROUNDING SYSTEMS SHALL BE IN ACCORDANCE WITH THE NATIONAL ELECTRIC CODE.

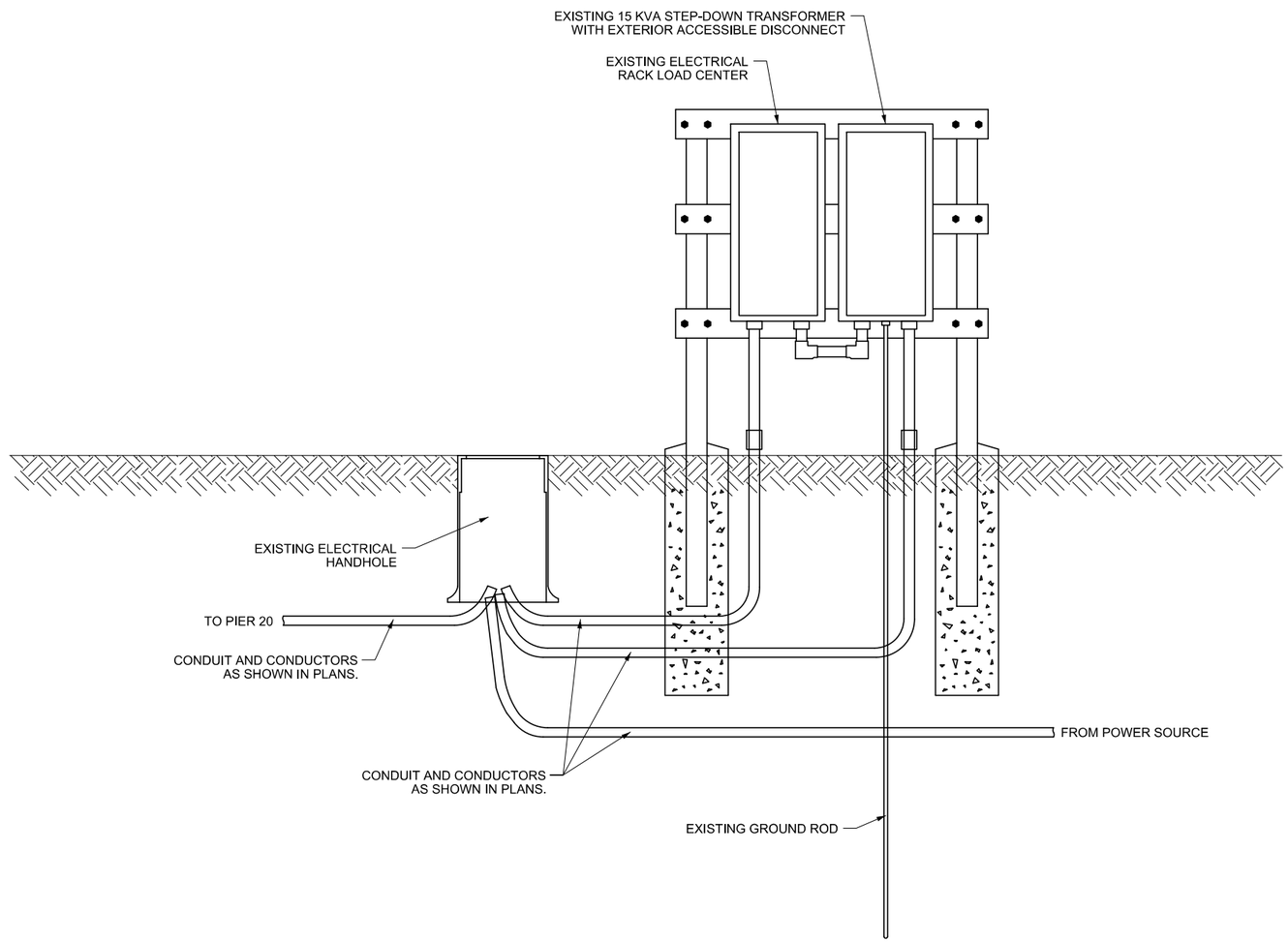

ELECTRICAL RACK

NOT TO SCALE

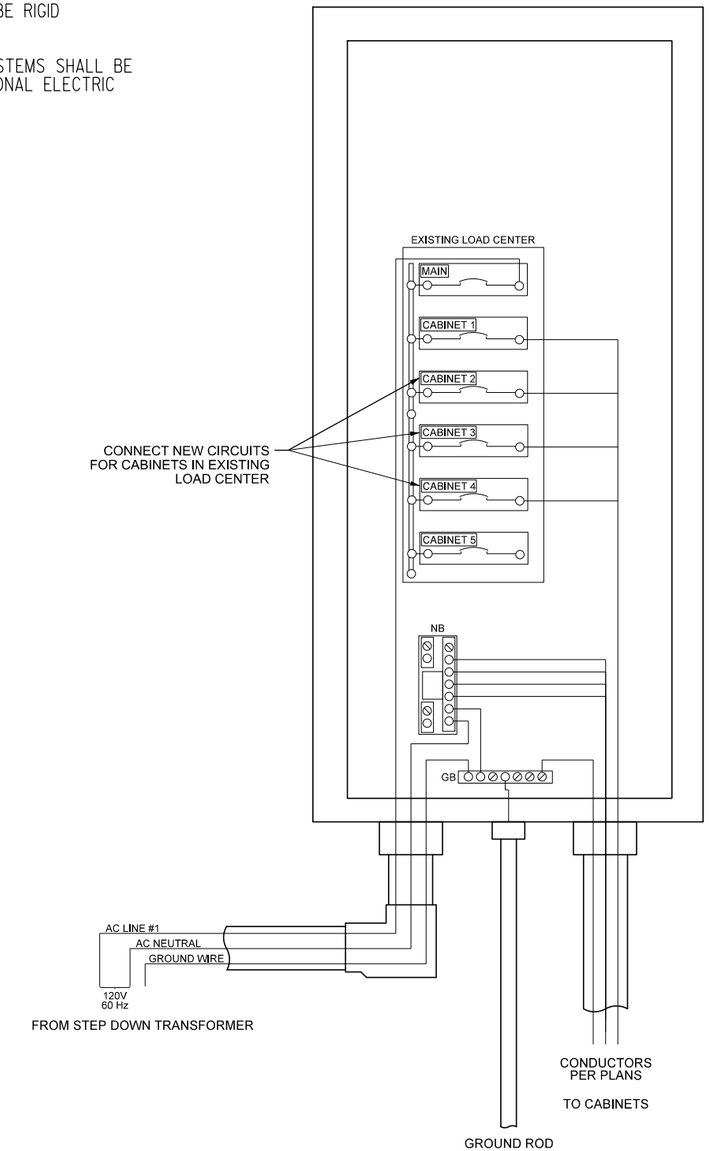

LOAD CENTER WIRING

NOT TO SCALE

TYPICAL ELECTRICAL RACK ITS DETAIL

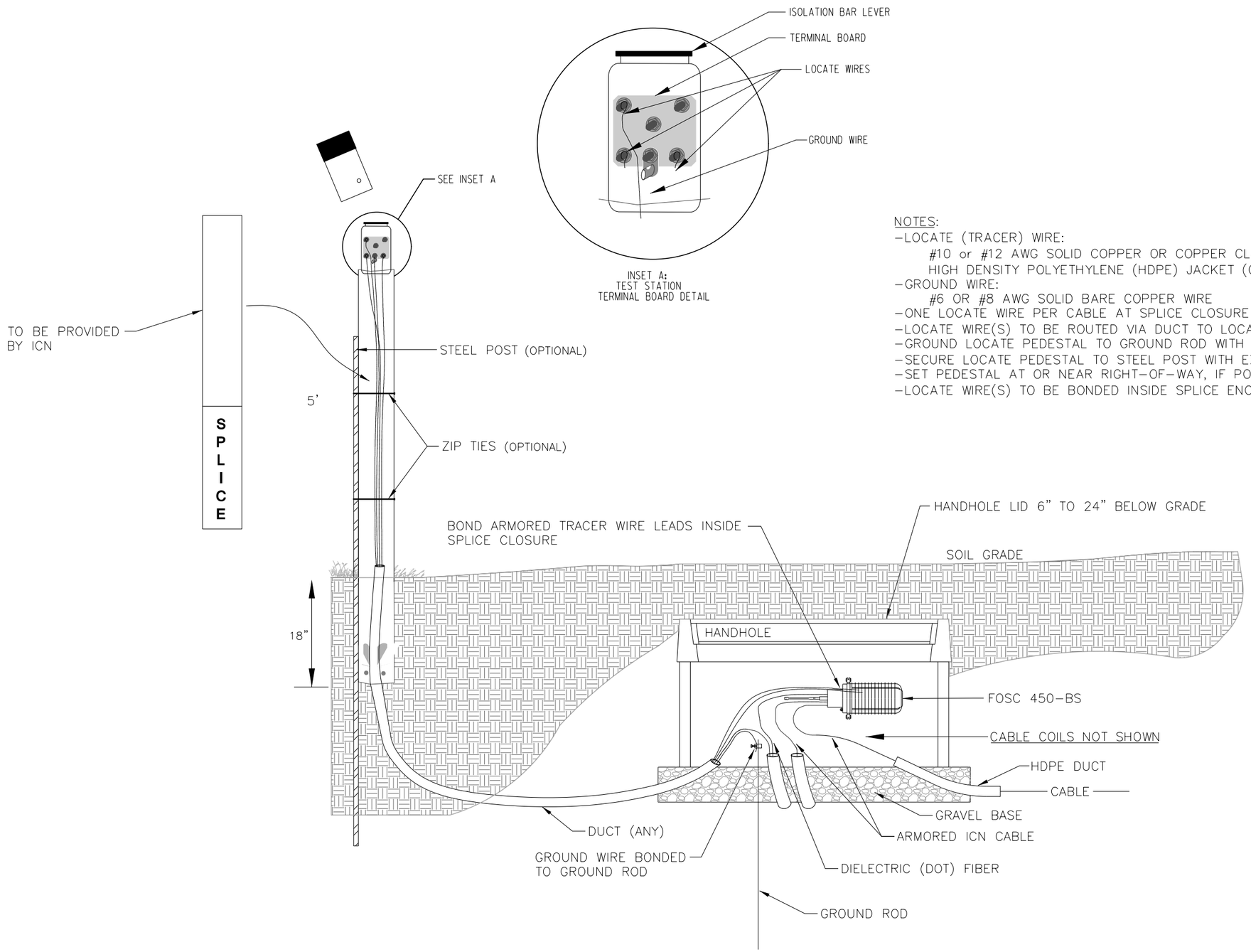

NOTES:
- LOCATE (TRACER) WIRE:
  - #10 or #12 AWG SOLID COPPER OR COPPER CLAD STEEL (CCS) WIRE
  - HIGH DENSITY POLYETHYLENE (HDPE) JACKET (ORANGE)
- GROUND WIRE:
  - #6 OR #8 AWG SOLID BARE COPPER WIRE
- ONE LOCATE WIRE PER CABLE AT SPLICE CLOSURE
- LOCATE WIRE(S) TO BE ROUTED VIA DUCT TO LOCATE PEDESTAL AND TERMINATED AT TERMINAL BOARD
- GROUND LOCATE PEDESTAL TO GROUND ROD WITH GROUND CLAMP OR EXOTHERMIC WELD
- SECURE LOCATE PEDESTAL TO STEEL POST WITH EXTERIOR GRADE ZIP TIES (OPTIONAL)
- SET PEDESTAL AT OR NEAR RIGHT-OF-WAY, IF POSSIBLE
- LOCATE WIRE(S) TO BE BONDED INSIDE SPLICE ENCLOSURE

LOCATE STATION DETAIL WITH SPLICE CLOSURE GROUND KIT

NOT TO SCALE

TYPICAL HANDHOLE INSTALLATION ITS DETAIL

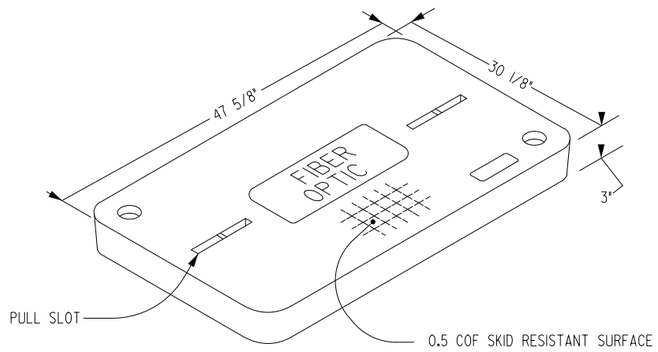

COVER

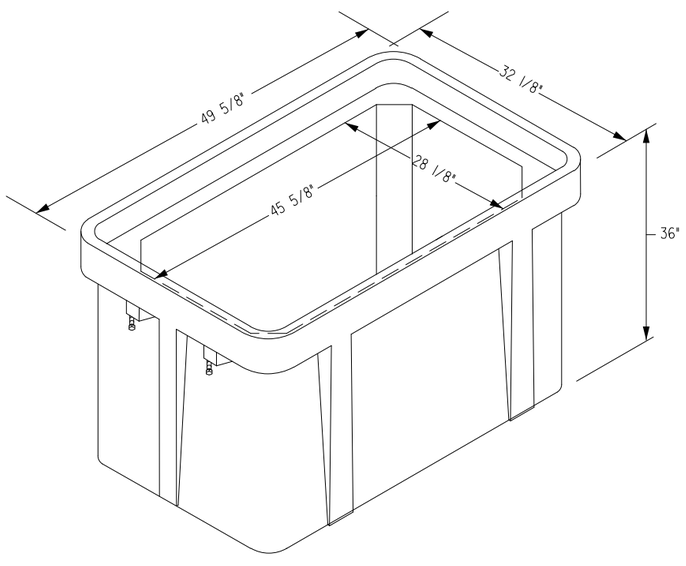

BOX

TYPE III HANDHOLE

NOT TO SCALE

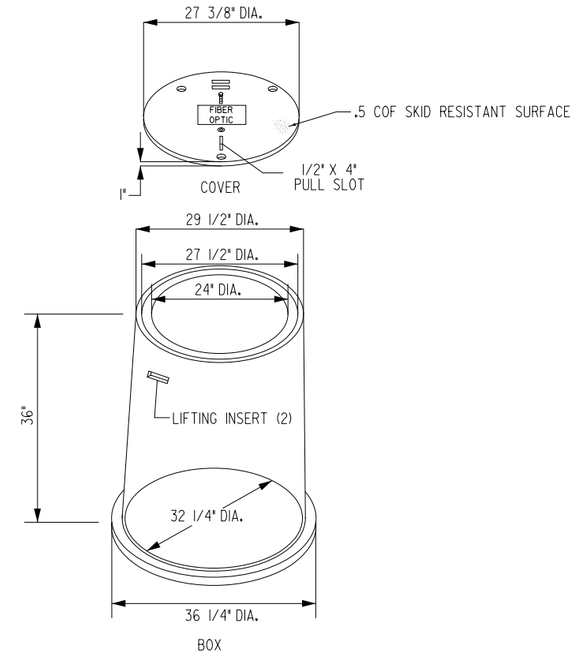

BOX

TYPE FOR27 HANDHOLE

NOT TO SCALE

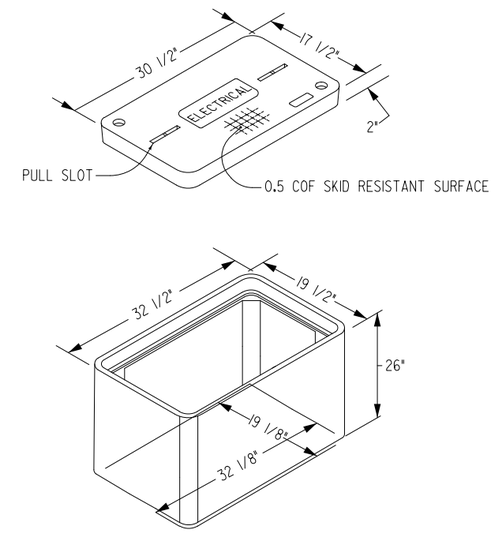

TYPE I HANDHOLE

NOT TO SCALE

GENERAL NOTES

1. HANDHOLES SHALL BE INSTALLED PER MANUFACTURER'S RECOMMENDATIONS AND AS SHOWN IN DETAILS.
2. ALL HANDHOLE COVERS SHALL HAVE AN APPROVED ANTI-SKID PATTERN.
3. HANDHOLES SHALL REST FIRMLY ON A BED OF 3/4" WASHED CRUSHED LIMESTONE ROCK WITH A MINIMUM DEPTH OF 12" BELOW THE BOTTOM OF THE HANDHOLE, EXTENDING AT LEAST 3" BEYOND THE OUTSIDE EDGES OF THE PULL BOX.
4. DO NOT INSTALL LID BOLTS.
5. AFTER TRACER WIRE IS INSTALLED, ALL DUCT TERMINALS ENDS IN HANDHOLES SHALL BE SEALED AGAINST ENTRY OF MOISTURE BY METHODS STATED IN SPECIAL PROVISIONS OR AS APPROVED BY THE ENGINEER.
6. ALL LIDS SHALL BE LABELED:
   ALL TYPE I HANDHOLE LIDS SHALL BE LABELED 'ELECTRICAL'.
   ALL TYPE FOR27 HANDHOLE LIDS SHALL BE LABELED 'FIBER OPTIC'.
   ALL TYPE III HANDHOLE LIDS SHALL BE LABELD 'FIBER OPTIC'.
7. NO CONDUIT SHALL ENTER THROUGH SIDE WALL OF HANDHOLES, THEY MUST ENTER FROM THE BOTTOM.

TYPICAL HANDHOLES
ITS DETAIL

GENERAL NOTES

1. MATERIALS AND METHODS OF CONSTRUCTION SHALL BE IN ACCORDANCE WITH CURRENT STANDARDS AND SUPPLEMENTAL SPECIFICATIONS.
2. CONTRACTOR SHALL FURNISH AND INSTALL POLE DAMPENER.
3. REFER TO BRIDGE PLANS FOR ANCHOR BOLT SIZE AND LAYOUT.
4. REFER TO BRIDGE PLANS FOR INFORMATION REGARDING THE MOUNTING OF POLES ON THE BRIDGE STRUCTURE.
5. REFER TO STANDARD ROAD PLAN LI-201 FOR INFORMATION REGARDING LIGHT POLE FOUNDATION FOR GROUND MOUNTED ITS POLES.

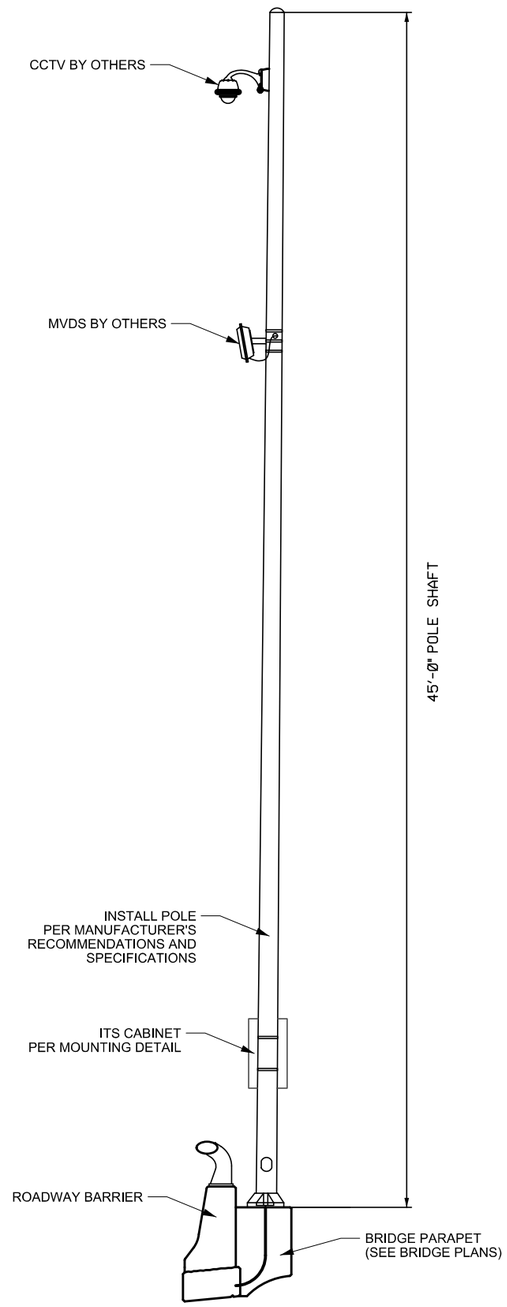

TYPICAL STEEL POLE

NOT TO SCALE

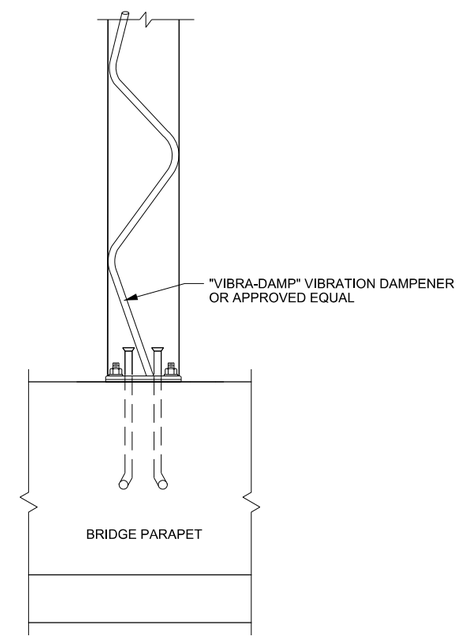

N.14-3 - TYPICAL POLE DAMPENER

NOT TO SCALE

TYPICAL STEEL POLE ITS DETAIL

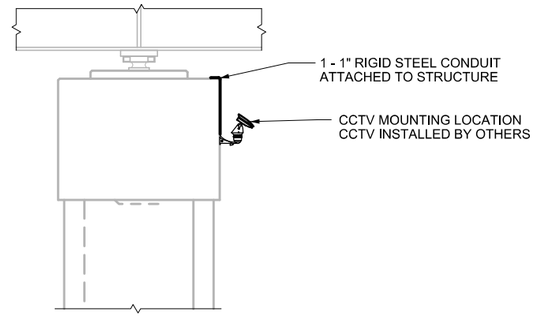

SECTION A-A

NOT TO SCALE
LOOKING WEST

GENERAL NOTES

1. MATERIALS AND METHODS OF CONSTRUCTION SHALL BE IN ACCORDANCE WITH CURRENT STANDARDS AND SUPPLEMENTAL SPECIFICATIONS.
2. GALVANIZED CONDUIT CLAMPS SHALL BE USED TO SECURE AND SUPPORT CONDUIT ATTACHED TO PIERS. CONDUIT CLAMPS ARE INCIDENTAL TO CONDUIT ATTACHED TO PIERS.
3. LATERAL CONDUIT SHALL BE SECURED AT THE BEGINNING AND END OF EACH CONDUIT RUN AND SHALL BE SUPPORTED EVERY 10 FEET.
4. CONDUIT SHALL CONTAIN AT LEAST ONE EXPANSION FITTING.
5. CCTV CAMERAS SHALL BE FURNISHED AND INSTALLED BY OTHERS.
6. LFNC STANDS FOR LIQUIDTIGHT FLEXIBLE NONMETALLIC CONDUIT. LFNC SWEEPS ARE INCIDENTAL TO RIGID STEEL CONDUIT.

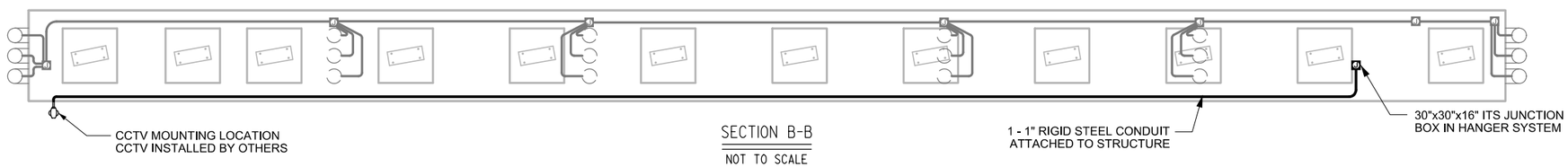

SECTION B-B

NOT TO SCALE

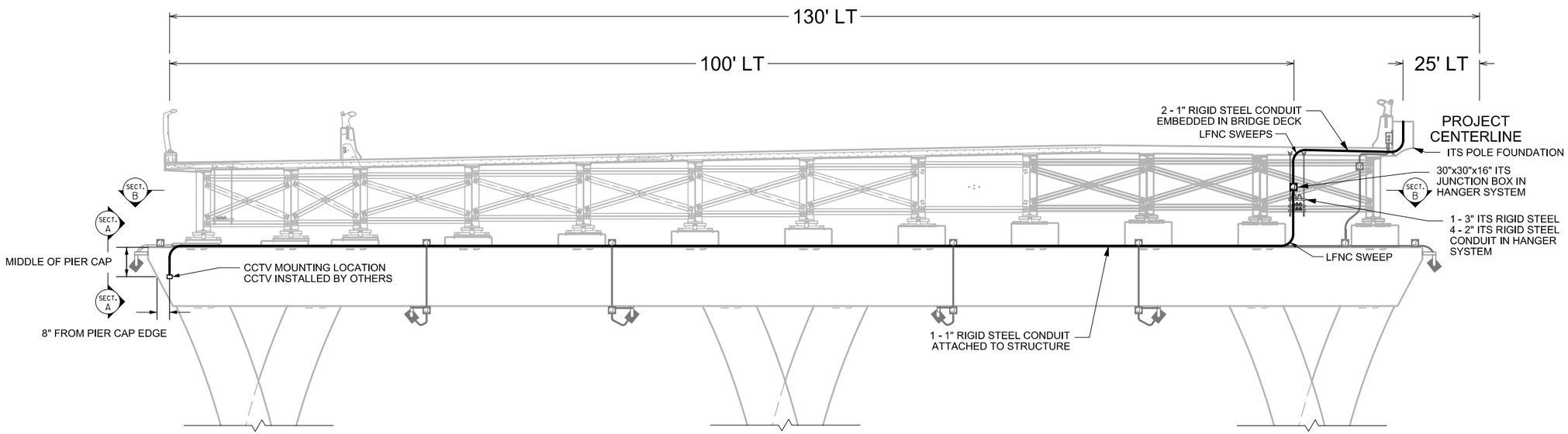

ELEVATION DETAIL FOR ITS CONDUIT AT PIER 18

NOT TO SCALE - LOOKING NORTH

ITS CONDUIT AT PIER 18
ITS DETAIL

GENERAL NOTES

1. MATERIALS AND METHODS OF CONSTRUCTION SHALL BE IN ACCORDANCE WITH CURRENT STANDARDS AND SUPPLEMENTAL SPECIFICATIONS.
2. SEE PIER DETAILS FOR ADDITIONAL INFORMATION FOR EMBEDDED CONDUIT, INCLUDING CONDUIT LOCATIONS WITHIN PIER COLUMNS.
3. LFNC STANDS FOR LIQUIDTIGHT FLEXIBLE NONMETALLIC CONDUIT. LFNC SWEEPS ARE INCIDENTAL TO RIGID STEEL CONDUIT.

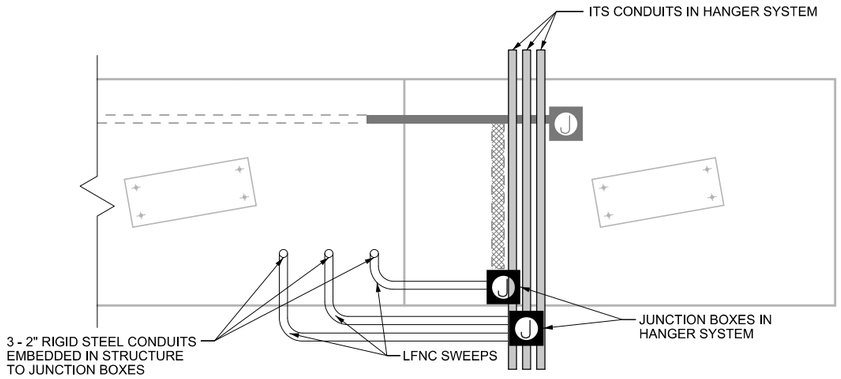

SECTION A-A

NOT TO SCALE

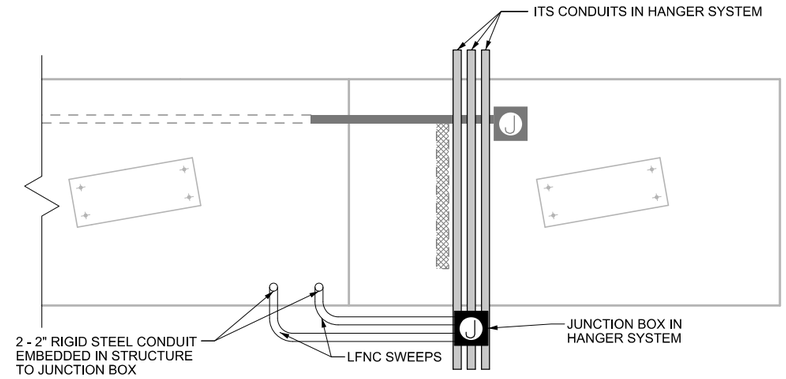

SECTION B-B

NOT TO SCALE

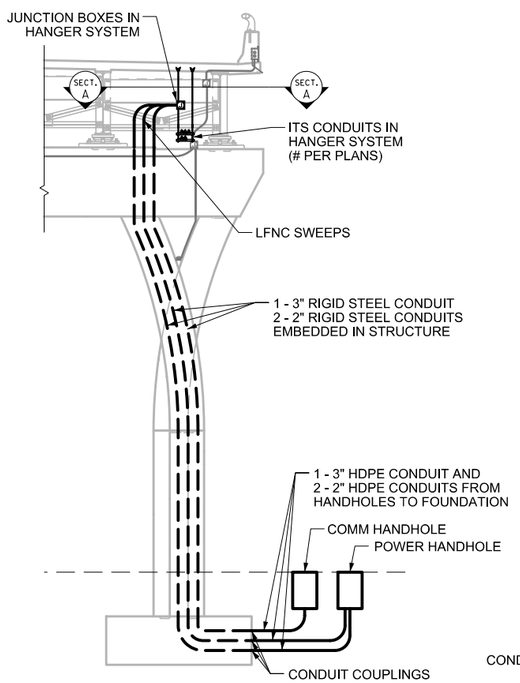

CONDUIT ROUTING AT PIER 20

NOT TO SCALE - LOOKING NORTH

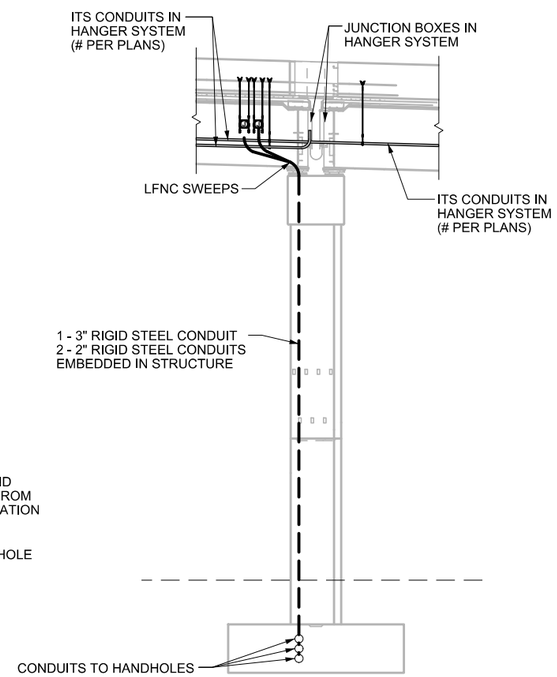

CONDUIT ROUTING AT PIER 20

NOT TO SCALE - LOOKING WEST

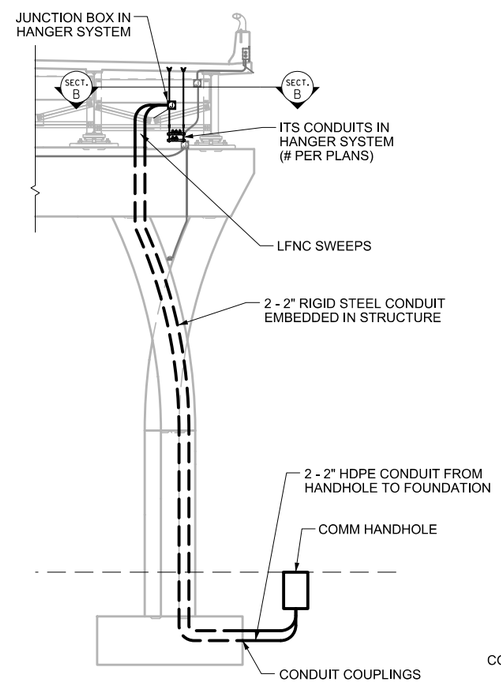

CONDUIT ROUTING AT PIER 21

NOT TO SCALE - LOOKING NORTH

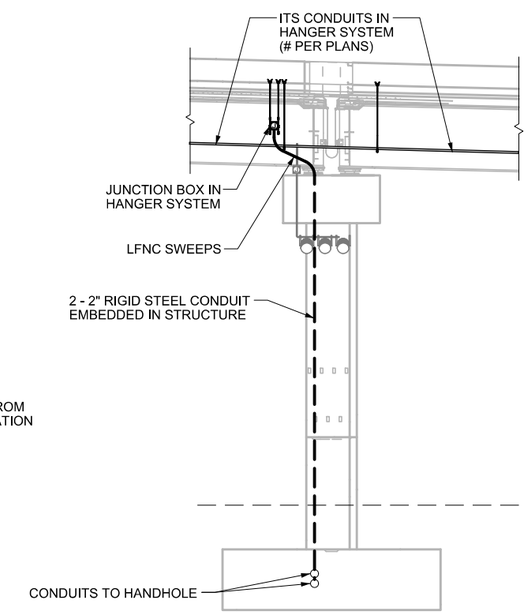

CONDUIT ROUTING AT PIER 21

NOT TO SCALE - LOOKING WEST

ITS CONDUIT AT PIER 20 AND 21
ITS DETAIL

GENERAL NOTES

1. MATERIALS AND METHODS OF CONSTRUCTION SHALL BE IN ACCORDANCE WITH CURRENT STANDARDS AND SUPPLEMENTAL SPECIFICATIONS.
2. SEE PIER DETAILS FOR ADDITIONAL INFORMATION FOR EMBEDDED CONDUIT, INCLUDING CONDUIT LOCATIONS WITHIN PIER COLUMNS.
3. LFNC STANDS FOR LIQUIDTIGHT FLEXIBLE NONMETALLIC CONDUIT. LFNC SWEEPS ARE INCIDENTAL TO RIGID STEEL CONDUIT.

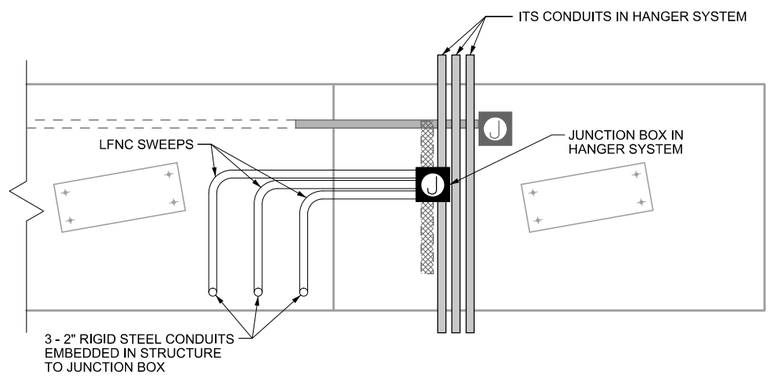

SECTION A-A

NOT TO SCALE

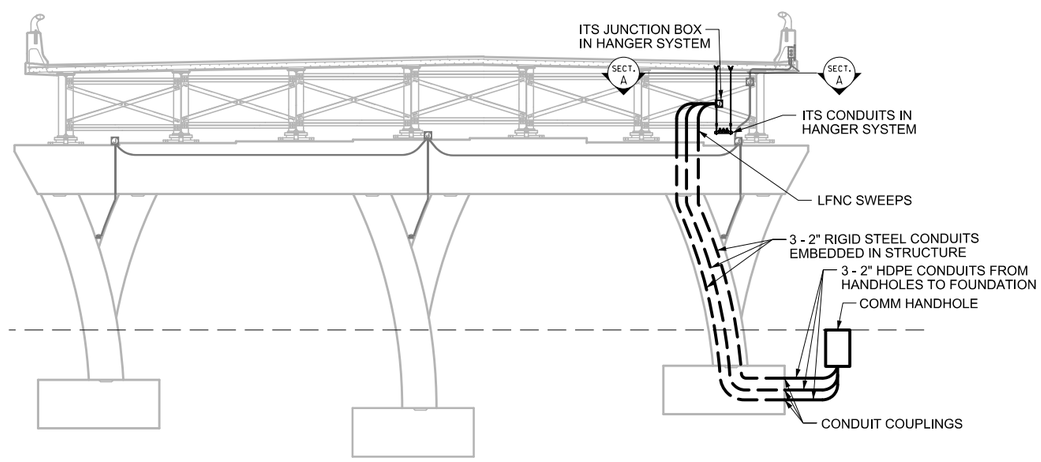

CONDUIT ROUTING AT PIER 26

NOT TO SCALE - LOOKING NORTH

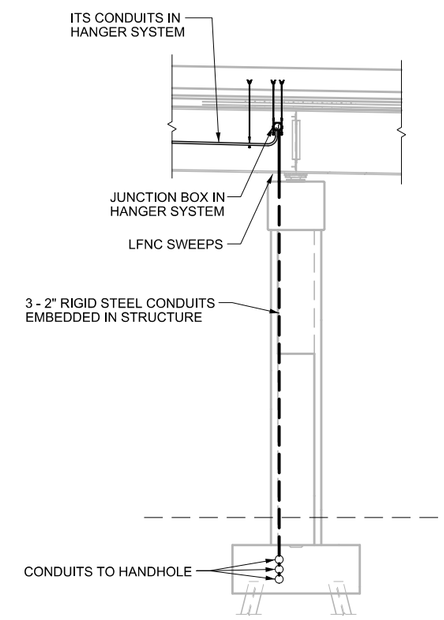

CONDUIT ROUTING AT PIER 26

NOT TO SCALE - LOOKING WEST

ITS CONDUIT AT PIER 26
ITS DETAIL

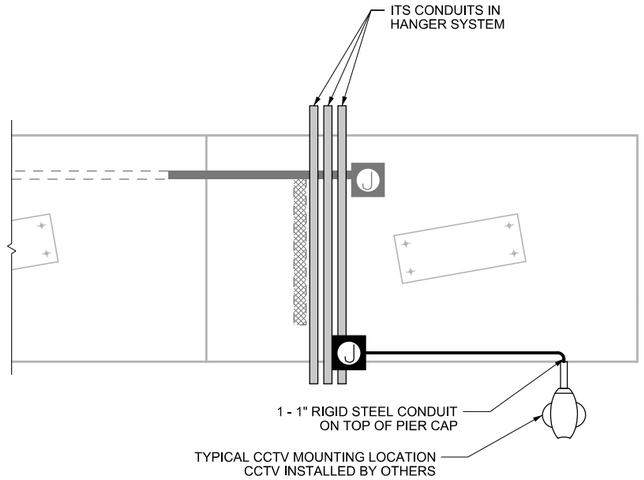

SECTION A-A

NOT TO SCALE

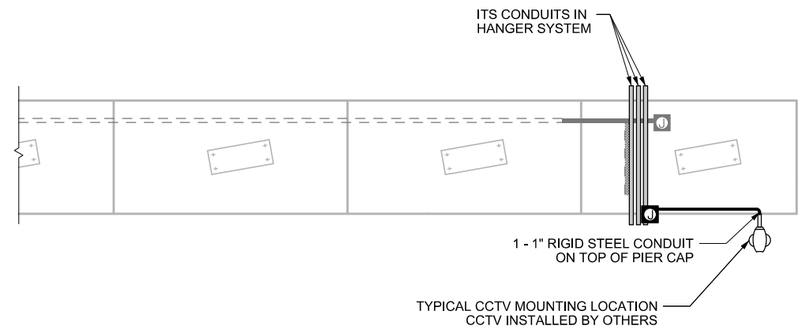

TOP VIEW OF TYPICAL CAMERA INSTALLATION

NOT TO SCALE

GENERAL NOTES

1. MATERIALS AND METHODS OF CONSTRUCTION SHALL BE IN ACCORDANCE WITH CURRENT STANDARDS AND SUPPLEMENTAL SPECIFICATIONS.
2. GALVANIZED CONDUIT CLAMPS SHALL BE USED TO SECURE AND SUPPORT CONDUIT ATTACHED TO PIERS. CONDUIT CLAMPS ARE INCIDENTAL TO CONDUIT ATTACHED TO PIERS.
3. CONDUIT SHALL BE SECURED AT THE BEGINNING AND END OF EACH CONDUIT RUN AND SHALL BE SUPPORTED EVERY 10 FEET.
4. CONDUIT SHALL CONTAIN AT LEAST ONE EXPANSION FITTING.
5. CCTV CAMERAS SHALL BE FURNISHED AND INSTALLED BY OTHERS.
6. LFNC STANDS FOR LIQUIDTIGHT FLEXIBLE NONMETALLIC CONDUIT. LFNC SWEEPS ARE INCIDENTAL TO RIGID STEEL CONDUIT.

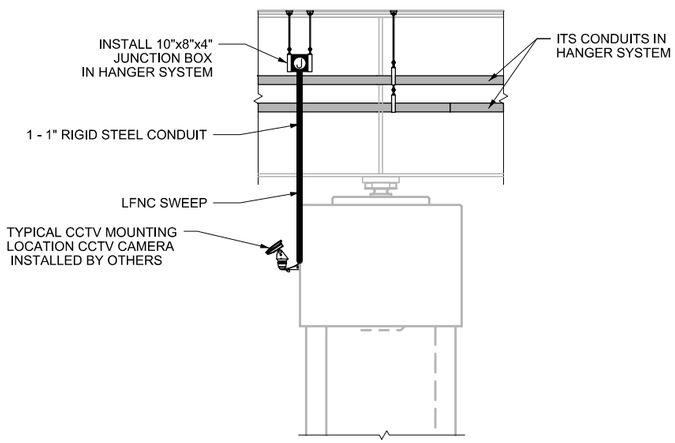

SECTION B-B

NOT TO SCALE

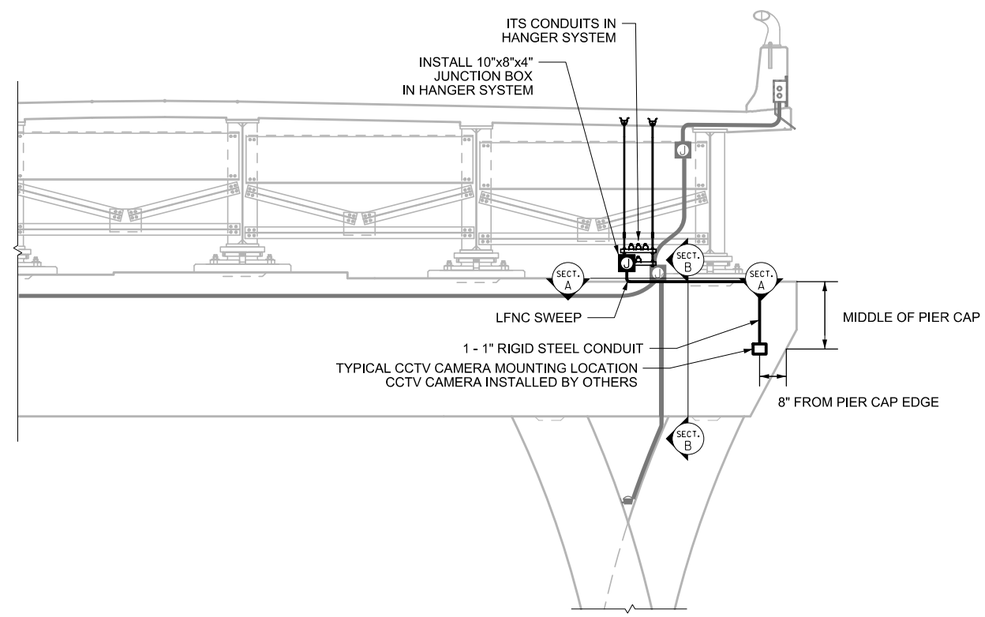

TYPICAL CAMERA INSTALLATION AT PIERS 17-22

NOT TO SCALE - LOOKING NORTH

TYPICAL CONDUIT TO CCTV LOCATIONS
ITS DETAIL

GENERAL NOTES

1. MATERIALS AND METHODS OF CONSTRUCTION SHALL BE IN ACCORDANCE WITH CURRENT STANDARDS AND SUPPLEMENTAL SPECIFICATIONS.
2. CONDUIT CLAMPS SHALL BE GALVANIZED.
3. ALL MECHANICAL CONCRETE ANCHORS OR MECHANICAL INSERTS SHALL CONFORM TO MATERIALS IM 453.09. ALL COMPONENTS OF THE ATTACHMENT ASSEMBLIES TO CONCRETE SHALL BE HOT DIP OR MECHANICALLY GALVANIZED STEEL ONLY. ELECTRODEPOSITED ZINC COATING WILL NOT BE ALLOWED. ALL CONCRETE ANCHORS SHALL BE POST-INSTALLED MECHANICAL CONCRETE ANCHORS OR CAST-IN-PLACE INSERTS. CONTRACTOR SHALL AVOID ALL REINFORCING WHEN DRILLING HOLES FOR CONCRETE ANCHORS. COST OF CONCRETE ANCHORS IS INCLUDED IN THE COST OF PIER CONCRETE.

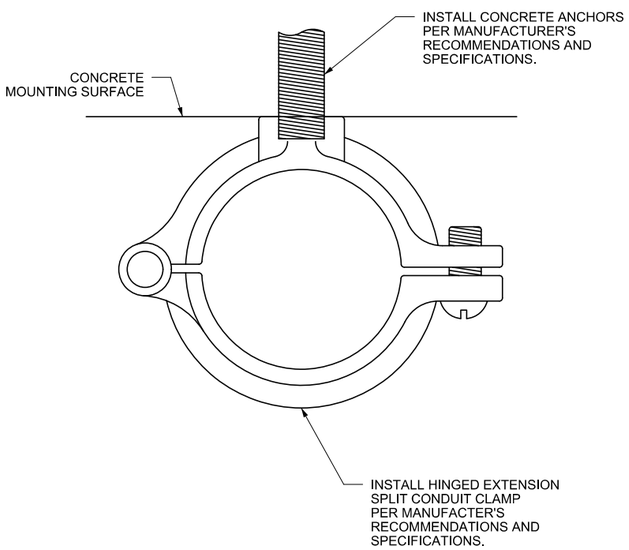

TOP VIEW OF CONDUIT CLAMP

NOT TO SCALE

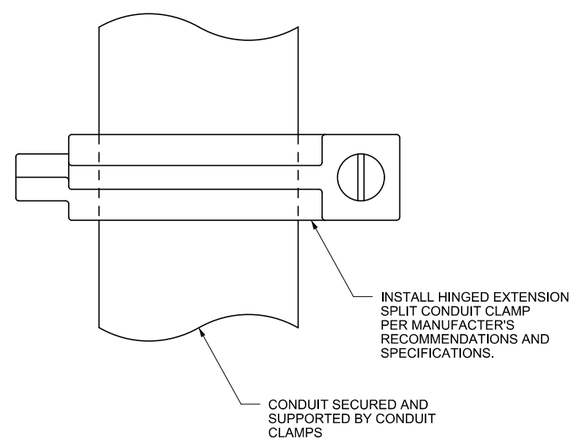

FRONT VIEW OF CONDUIT CLAMP

NOT TO SCALE

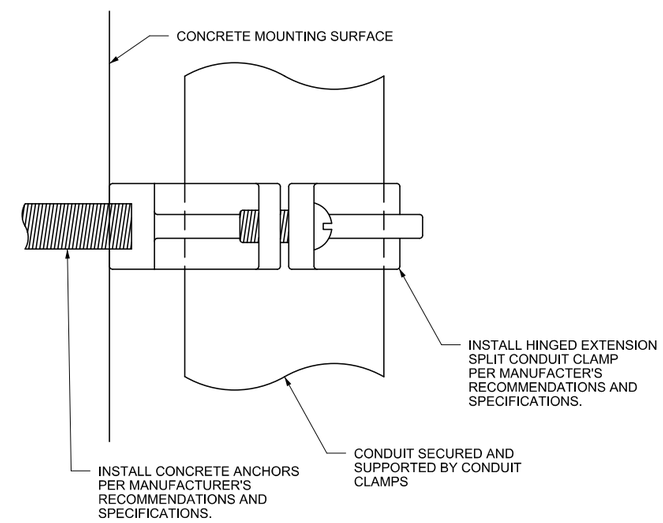

SIDE VIEW OF CONDUIT CLAMP

NOT TO SCALE

TYPICAL CONDUIT CLAMP ITS DETAIL

HIGHWAY LIGHTING DATA

108-11A
10-29-02

ELECTRICAL SERVICE:
MIDAMERICAN ENERGY IS PROVIDING THE PROPOSED SECONDARY SERVICE (120/240 VOLTS SINGLE PHASE) TO THE PROPOSED CONTROL STATIONS. THE EXACT LOCATION OF THE CONTROL STATION SHALL BE DETERMINED BY THE ENGINEER AND APPROVED BY THE UTILITY COMPANY. THE UTILITY WILL FURNISH THE METER. IT SHALL BE THE CONTRACTOR'S RESPONSIBILITY TO MAKE THE NECESSARY CONTACTS WITH THE UTILITY COMPANY WITH REGARD TO CONNECTIONS TO THE SERVICE DROP. THE MIDAMERICAN ENERGY CONTACT IS: KARL DERRICK. (563) 333-8776.

NO. 8 AWG - CIRCUIT E1 FROM E0106 TO E0108
NO. 8 AWG - CIRCUIT E2 FROM E0106 TO E0207
NO. 2 AWG - CIRCUIT E3 FROM CONTROL STATION TO E0307 - SEE PLAN NOTE 8
NO. 2 AWG - CIRCUIT E4 FROM CONTROL STATION TO E0307 - SEE PLAN NOTE 8
NO. 2 AWG - CIRCUIT E7 FROM CONTROL STATION TO E0702
NO. 2 AWG - CIRCUIT E8 FROM CONTROL STATION TO E0801
NO. 6 AWG - CIRCUIT X6 FROM CONTROL STATION TO PIER 18 AESTHETIC LIGHTING
NO. 4 AWG - CIRCUIT X7 FROM CONTROL STATION TO PIER 31 AESTHETIC LIGHTING
NO. 4 AWG - CIRCUIT X7 FROM PIER 21 TO PIER 22C AESTHETIC LIGHTING
NO. 2 AWG - CIRCUIT X8 FROM CONTROL STATION TO X0824

TABULATION OF WIRE, CABLE AND CONNECTORS

108-12
02-11-00

CIRCUIT NUMBER	CONNECTORS								PHASE LINES										GROUND		REMARKS
	TYPE	QUAN. NO.	TYPE	QUAN. NO.	TYPE	QUAN. NO.	TYPE	QUAN. NO.	SIZE A.W.G.	QUAN. L.F.	SIZE A.W.G.	QUAN. L.F.	SIZE A.W.G.	QUAN. L.F.	SIZE A.W.G.	QUAN. L.F.	SIZE A.W.G.	QUAN. L.F.	SIZE A.W.G.	QUAN. L.F.	
E1	L-1	2	L-2	-	Y-1	-	Y-3	2	-	-	-	-	-	-	8	1146	10	64	-	-	(1)
E2	L-1	4	L-2	-	Y-1	-	Y-3	2	-	-	-	-	-	-	8	561	10	64	-	-	(1)
E3	L-1	14	L-2	2	Y-1	-	Y-3	14	2	3340	-	-	-	-	-	-	10	952	-	-	(1)
E4	L-1	14	L-2	4	Y-1	-	Y-3	14	2	3340	-	-	-	-	-	-	10	952	-	-	(1)
E7	L-1	4	L-2	4	Y-1	-	Y-3	2	-	-	4	3300	-	-	-	-	10	212	-	-	(1)
E8	L-1	2	L-2	4	Y-1	-	Y-3	-	-	-	4	3432	-	-	-	-	10	212	-	-	(1)
X6	L-1	19	L-2	2	Y-1	-	Y-3	36	-	-	-	-	6	1152	-	-	-	-	-	-	(2)
X7	L-1	94	L-2	2	Y-1	-	Y-3	90	-	-	4	1152	-	-	-	-	-	-	-	-	(2)
X8	L-1	4	L-2	-	Y-1	-	Y-3	2	2	1980	-	-	-	-	-	-	10	430	-	-	(2)
COMMON GROUND																			6	3512	(1)
COMMON GROUND																			10	842	(1)
COMMON GROUND																			10	3423	(2)

PROJECT NOTE

THE PAY ITEMS HAVE BEEN DIVIDED IN THE REMARKS AS FOLLOWS:

(1) DIVISION 1 PAY ITEM (IOWA DOT COST)
(2) DIVISION 2 PAY ITEM (CITY OF BETTENDORF COST)
(3) DIVISION 3 PAY ITEM (50% MOLINE / 50% BETTENDORF COST)
(4) DIVISION 4 PAY ITEM (NON-PARTICIPATING)
(5) DIVISION 5 PAY ITEM (PRIVATE UTILITY)

LIGHTING DESIGN

LICENSED PROFESSIONAL ENGINEER
Geoffrey H. Thiesse
19319
IOWA

I hereby certify that this engineering document was prepared by me or under my direct personal supervision and that I am a duly licensed Professional Engineer under the laws of the State of Iowa.

Signature Date
GEOFFREY THIESSE, P.E.
Printed or Typed Name
My license renewal date is December 31, 20 16

Pages or sheets covered by this seal: P.01 - P.36

LIGHTING QUANTITIES

TABULATION OF LIGHTING INSTALLATIONS

(1) LI-201

108-1 MODIFIED

LOCATION				LI-101			FOOTING TYPE (1)	REMARKS
NO.	STATION	OFFSET	ALIGNMENT	TYPE	A	E		
E0701	6796+84.4	BARRIER WALL	I-74 ML	-	-	-	-	SEE PLAN NOTE 1 & P.29 POLE TYPE I (1)
E0801	6799+84.9	BARRIER WALL	I-74 ML	-	-	-	-	SEE PLAN NOTE 1 & P.29 POLE TYPE I (1)
E0702	6802+84.8	BARRIER WALL	I-74 ML	-	-	-	-	SEE PLAN NOTE 1 & P.29 POLE TYPE I (1)
E0307	6781+84.4	BARRIER WALL	I-74 ML	-	-	-	-	SEE PLAN NOTE 1 & P.29 POLE TYPE I (1)
E0407	6785+00.0	BARRIER WALL	I-74 ML	-	-	-	-	SEE PLAN NOTE 1 & P.29 POLE TYPE I (1)
E0306	6788+50.0	BARRIER WALL	I-74 ML	-	-	-	-	SEE PLAN NOTE 1 & P.29 POLE TYPE I (1)
E0404	6791+00.0	BARRIER WALL	I-74 ML	-	-	-	-	SEE PLAN NOTE 1 & P.29 POLE TYPE I (1)
E0304	6793+84.4	BARRIER WALL	I-74 ML	-	-	-	-	SEE PLAN NOTE 1 & P.29 POLE TYPE I (1)
E0301	6795+01.4	72.8' LT	I-74 ML	-	-	-	-	SEE PLAN NOTE 12 (1)
E0302	6795+79.1	73.0' LT	I-74 ML	-	-	-	-	SEE PLAN NOTE 12 (1)
E0303	6796+33.7	75.3' LT	I-74 ML	-	-	-	-	SEE PLAN NOTE 12 (1)
E0305	6789+08.7	76.1' LT	I-74 ML	-	-	-	-	SEE PLAN NOTE 12 (2)
E0401	6794+96.2	40.7' LT	I-74 ML	-	-	-	-	SEE PLAN NOTE 12 (1)
E0402	6795+50.8	43.2' LT	I-74 ML	-	-	-	-	SEE PLAN NOTE 12 (1)
E0403	6796+28.4	43.2' LT	I-74 ML	-	-	-	-	SEE PLAN NOTE 12 (1)
E0406	6788+66.0	41.7' LT	I-74 ML	-	-	-	-	SEE PLAN NOTE 12 (2)
E0405	6789+02.8	39.8' LT	I-74 ML	-	-	-	-	SEE PLAN NOTE 12 (2)
E0108	3585+68.5	BARRIER WALL	US-67 RAMP C	-	-	-	-	SEE PLAN NOTE 2 & P.30 POLE TYPE II (1)
E0207	3588+38.5	BARRIER WALL	US-67 RAMP C	-	-	-	-	SEE PLAN NOTE 2 & P.30 POLE TYPE II (1)
E0107	3588+81.8	0.9' LT	I-74 RAMP C	-	-	-	-	SEE PLAN NOTE 12 (2)
E0206	3589+19.2	0.1' RT	I-74 RAMP C	-	-	-	-	SEE PLAN NOTE 12 (2)
X0824	6782+98.3	BARRIER WALL	I-74 ML	-	-	-	-	SEE PLAN NOTE 3 & P.30 POLE TYPE III (2)

TABULATION OF AESTHETIC LIGHTING INSTALLATIONS

LOCATION			REMARKS
NO.	PIER	AIMING ANGLE	
X0619	17	7	LUMINAIRE TYPE 'LD' (2)
X0620	17	12	LUMINAIRE TYPE 'LD' (2)
X0621	17	9	LUMINAIRE TYPE 'LD' (2)
X0622	17	10	LUMINAIRE TYPE 'LD' (2)
X0623	17	15	LUMINAIRE TYPE 'LD' (2)
X0624	17	32	LUMINAIRE TYPE 'LC' (2)
X0625	17	32	LUMINAIRE TYPE 'LC' (2)
X0626	17	15	LUMINAIRE TYPE 'LD' (2)
X0627	17	10	LUMINAIRE TYPE 'LD' (2)
X0628	17	10	LUMINAIRE TYPE 'LD' (2)
X0629	17	15	LUMINAIRE TYPE 'LD' (2)
X0630	17	32	LUMINAIRE TYPE 'LC' (2)
X0631	17	32	LUMINAIRE TYPE 'LC' (2)
X0632	17	15	LUMINAIRE TYPE 'LD' (2)
X0633	17	10	LUMINAIRE TYPE 'LD' (2)
X0634	17	7	LUMINAIRE TYPE 'LD' (2)
X0635	17	12	LUMINAIRE TYPE 'LD' (2)
X0636	17	9	LUMINAIRE TYPE 'LD' (2)
X0637	18	7	LUMINAIRE TYPE 'LD' (2)
X0638	18	12	LUMINAIRE TYPE 'LD' (2)
X0639	18	9	LUMINAIRE TYPE 'LD' (2)
X0640	18	10	LUMINAIRE TYPE 'LD' (2)
X0641	18	15	LUMINAIRE TYPE 'LD' (2)
X0642	18	32	LUMINAIRE TYPE 'LC' (2)
X0643	18	32	LUMINAIRE TYPE 'LC' (2)
X0644	18	15	LUMINAIRE TYPE 'LD' (2)
X0645	18	10	LUMINAIRE TYPE 'LD' (2)
X0646	18	10	LUMINAIRE TYPE 'LD' (2)
X0647	18	15	LUMINAIRE TYPE 'LD' (2)
X0648	18	32	LUMINAIRE TYPE 'LC' (2)
X0649	18	32	LUMINAIRE TYPE 'LC' (2)
X0650	18	15	LUMINAIRE TYPE 'LD' (2)
X0651	18	10	LUMINAIRE TYPE 'LD' (2)
X0652	18	7	LUMINAIRE TYPE 'LD' (2)
X0653	18	12	LUMINAIRE TYPE 'LD' (2)
X0654	18	9	LUMINAIRE TYPE 'LD' (2)
X0701	19	N/A	LUMINAIRE TYPE 'LE' (2)
X0702	19	N/A	LUMINAIRE TYPE 'LE' (2)
X0703	19	N/A	LUMINAIRE TYPE 'LE' (2)
X0704	19	N/A	LUMINAIRE TYPE 'LE' (2)
X0705	20	N/A	LUMINAIRE TYPE 'LE' (2)
X0706	20	N/A	LUMINAIRE TYPE 'LE' (2)
X0707	20	N/A	LUMINAIRE TYPE 'LE' (2)
X0708	20	N/A	LUMINAIRE TYPE 'LE' (2)
X0709	20	N/A	LUMINAIRE TYPE 'LE' (2)
X0710	21	N/A	LUMINAIRE TYPE 'LE' (2)
X0711	21	N/A	LUMINAIRE TYPE 'LE' (2)
X0712	21	N/A	LUMINAIRE TYPE 'LE' (2)
X0713	21	N/A	LUMINAIRE TYPE 'LE' (2)
X0714	21	N/A	LUMINAIRE TYPE 'LE' (2)
X0715	22	N/A	LUMINAIRE TYPE 'LE' (2)
X0716	22	N/A	LUMINAIRE TYPE 'LE' (2)
X0717	22	N/A	LUMINAIRE TYPE 'LE' (2)
X0718	23	N/A	LUMINAIRE TYPE 'LE' (2)
X0719	23	N/A	LUMINAIRE TYPE 'LE' (2)
X0720	23	N/A	LUMINAIRE TYPE 'LE' (2)
X0721	24	N/A	LUMINAIRE TYPE 'LE' (2)
X0722	24	N/A	LUMINAIRE TYPE 'LE' (2)

TABULATION OF AESTHETIC LIGHTING INSTALLATIONS

LOCATION			REMARKS
NO.	PIER	AIMING ANGLE	
X0723	24	N/A	LUMINAIRE TYPE 'LE' (2)
X0724	25	N/A	LUMINAIRE TYPE 'LE' (2)
X0725	25	N/A	LUMINAIRE TYPE 'LE' (2)
X0726	25	N/A	LUMINAIRE TYPE 'LE' (2)
X0727	26	N/A	LUMINAIRE TYPE 'LE' (2)
X0728	26	N/A	LUMINAIRE TYPE 'LE' (2)
X0729	26	N/A	LUMINAIRE TYPE 'LE' (2)
X0730	22C	N/A	LUMINAIRE TYPE 'LE' (2)
X0731	22C	N/A	LUMINAIRE TYPE 'LE' (2)
X0732	22C	N/A	LUMINAIRE TYPE 'LE' (2)
X0733	27	N/A	LUMINAIRE TYPE 'LE' (2)
X0734	27	N/A	LUMINAIRE TYPE 'LE' (2)
X0735	27	N/A	LUMINAIRE TYPE 'LE' (2)
X0736	28	N/A	LUMINAIRE TYPE 'LE' (2)
X0737	28	N/A	LUMINAIRE TYPE 'LE' (2)
X0738	28	N/A	LUMINAIRE TYPE 'LE' (2)
X0739	29	N/A	LUMINAIRE TYPE 'LE' (2)
X0740	29	N/A	LUMINAIRE TYPE 'LE' (2)
X0741	29	N/A	LUMINAIRE TYPE 'LE' (2)
X0742	30	N/A	LUMINAIRE TYPE 'LE' (2)
X0743	30	N/A	LUMINAIRE TYPE 'LE' (2)
X0744	30	N/A	LUMINAIRE TYPE 'LE' (2)
X0745	31	N/A	LUMINAIRE TYPE 'LE' (2)
X0746	31	N/A	LUMINAIRE TYPE 'LE' (2)
X0747	31	N/A	LUMINAIRE TYPE 'LE' (2)

LIGHTING QUANTITIES

TABULATION OF ELECTRICAL DUCTS

108-2
08-20-85

Location	Conduit Type	No. Of Cond.	Dia. Inches	Length Feet	Remarks
E0108 TO E0207	CONC. EMBEDDED	1	2	266	CIRCUIT E1 SEE PLAN NOTE 10 (1)
E0207 TO JUNCTION BOX	CONC. EMBEDDED	1	2	116	CIRCUITS E1, E2 SEE PLAN NOTE 10 (1)
JUNCTION BOX TO CAPPED END	CONC. EMBEDDED	1	2	139	CIRCUITS E1, E2 SEE PLAN NOTE 10 (1)
CAPPED END TO CAPPED END	CONC. EMBEDDED	1	2	138	EMPTY SEE PLAN NOTE 10 (1)
CAPPED END TO E0307	CONC. EMBEDDED	1	2	64	EMPTY SEE PLAN NOTE 10 (1)
E0307 TO E0407	CONC. EMBEDDED	1	2	316	CIRCUITS E3, E4 SEE PLAN NOTE 10 (1)
E0407 TO E0306	CONC. EMBEDDED	1	2	350	CIRCUITS E3, E4 SEE PLAN NOTE 10 (1)
E0306 TO JUNCTION BOX	CONC. EMBEDDED	1	2	76	CIRCUITS E3, E4 SEE PLAN NOTE 10 (1)
JUNCTION BOX TO E0404	CONC. EMBEDDED	1	2	174	CIRCUITS E3, E4 SEE PLAN NOTE 10 (1)
E0404 TO E0304	CONC. EMBEDDED	1	2	284	CIRCUITS E3, E4 SEE PLAN NOTE 10 (1)
E0304 TO JUNCTION BOX	CONC. EMBEDDED	1	2	84	CIRCUITS E3, E4 SEE PLAN NOTE 10 (1)
JUNCTION BOX TO JUNCTION BOX	CONC. EMBEDDED	1	2	179	CIRCUITS E3, E4 SEE PLAN NOTE 10 (1)
JUNCTION BOX TO E0701	CONC. EMBEDDED	1	2	39	CIRCUITS E7, E8 SEE PLAN NOTE 10 (1)
E0701 TO E0801	CONC. EMBEDDED	1	2	300	CIRCUITS E7, E8 SEE PLAN NOTE 10 (1)
E0801 TO E0702	CONC. EMBEDDED	1	2	300	CIRCUITS E7, E8 SEE PLAN NOTE 10 (1)
E0702 TO CAPPED END	CONC. EMBEDDED	1	2	108	EMPTY SEE PLAN NOTE 10 (1)
E0107 TO E0206	ATTACH TO STRUCT.	1	1	39	CIRCUIT E1 NO. 10 CONDUCTORS (2)
E0206 TO JUNCTION BOX RL-9	ATTACH TO STRUCT.	1	1	40	CIRCUITS E1, E2 NO. 10 CONDUCTORS (2)
E0305 TO JUNCTION BOX RL-7	ATTACH TO STRUCT.	1	1	27	CIRCUIT E3 NO. 10 CONDUCTORS (2)
JUNCTION BOX RL-7 TO JUNCTION BOX RL-6	ATTACH TO STRUCT.	1	1	36	CIRCUIT E3 NO. 10 CONDUCTORS (2)
E0406 TO E0405	ATTACH TO STRUCT.	1	1	38	CIRCUIT E4 NO. 10 CONDUCTORS (2)
E0405 TO JUNCTION BOX RL-6	ATTACH TO STRUCT.	1	1	27	CIRCUIT E4 NO. 10 CONDUCTORS (2)
JUNCTION BOX RL-6 TO JUNCTION BOX RL-5	ATTACH TO STRUCT.	1	1	15	CIRCUITS E3, E4 NO. 10 CONDUCTORS (2)
E0303 TO E0302	ATTACH TO STRUCT.	1	1	56	CIRCUIT E3 NO. 10 CONDUCTORS (1)
E0302 TO E0301	ATTACH TO STRUCT.	1	1	87	CIRCUIT E3 NO. 10 CONDUCTORS (1)
E0301 TO JUNCTION BOX RL-4	ATTACH TO STRUCT.	1	1	10	CIRCUIT E3 NO. 10 CONDUCTORS (1)
JUNCTION BOX RL-4 TO JUNCTION BOX RL-3	ATTACH TO STRUCT.	1	1	32	CIRCUIT E3 NO. 10 CONDUCTORS (1)
E0403 TO E0402	ATTACH TO STRUCT.	1	1	77	CIRCUIT E4 NO. 10 CONDUCTORS (1)
E0402 TO E0401	ATTACH TO STRUCT.	1	1	54	CIRCUIT E4 NO. 10 CONDUCTORS (1)
JUNCTION BOX RL-3 TO JUNCTION BOX RL-2	ATTACH TO STRUCT.	1	1	21	CIRCUITS E3, E4 NO. 10 CONDUCTORS (1)
JUNCTION BOX RL-1 TO JUNCTION BOX	CONC. EMBEDDED	1	3	13	CIRCUITS E3,E4,E7,E8 SEE PLAN NOTE 10 (1)
JUNCTION BOX TO JUNCTION BOX	ATTACH TO STRUCT.	1	3	8	CIRCUITS E3,E4,E7,E8 (1)
JUNCTION BOX TO HANDHOLE HH-1	CONC. EMBEDDED	1	3	34	CIRCUITS E3,E4,E7,E8 SEE PLAN NOTE 10 (1)
PIER 31 AESTHETIC LIGHTING	ATTACH TO STRUCT.	1	1	20	CIRCUIT X7 (1)
PIER 31 AESTHETIC LIGHTING	CONC. EMBEDDED	1	1	70	CIRCUIT X7 SEE PLAN NOTE 10 (1)
PIER 31 TO PIER 30 AESTHETIC LIGHTING	CONC. EMBEDDED	1	2	148	CIRCUIT X7 SEE PLAN NOTE 10 (1)
PIER 30 AESTHETIC LIGHTING	ATTACH TO STRUCT.	1	1	20	CIRCUIT X7 (1)
PIER 30 AESTHETIC LIGHTING	CONC. EMBEDDED	1	1	70	CIRCUIT X7 SEE PLAN NOTE 10 (1)
PIER 30 TO PIER 29 AESTHETIC LIGHTING	CONC. EMBEDDED	1	2	148	CIRCUIT X7 SEE PLAN NOTE 10 (1)
PIER 29 AESTHETIC LIGHTING	ATTACH TO STRUCT.	1	1	20	CIRCUIT X7 (1)
PIER 29 AESTHETIC LIGHTING	CONC. EMBEDDED	1	1	70	CIRCUIT X7 SEE PLAN NOTE 10 (1)
PIER 29 TO PIER 28 AESTHETIC LIGHTING	CONC. EMBEDDED	1	2	148	CIRCUIT X7 SEE PLAN NOTE 10 (1)
PIER 28 AESTHETIC LIGHTING	ATTACH TO STRUCT.	1	1	20	CIRCUIT X7 (1)
PIER 28 AESTHETIC LIGHTING	CONC. EMBEDDED	1	1	70	CIRCUIT X7 SEE PLAN NOTE 10 (1)
PIER 28 TO PIER 27 AESTHETIC LIGHTING	CONC. EMBEDDED	1	2	148	CIRCUIT X7 SEE PLAN NOTE 10 (1)

TABULATION OF ELECTRICAL DUCTS

108-2
08-20-85

Location	Conduit Type	No. Of Cond.	Dia. Inches	Length Feet	Remarks
PIER 27 AESTHETIC LIGHTING	ATTACH TO STRUCT.	1	1	20	CIRCUIT X7 (1)
PIER 27 AESTHETIC LIGHTING	CONC. EMBEDDED	1	1	70	CIRCUIT X7 SEE PLAN NOTE 10 (1)
PIER 27 TO PIER 26 AESTHETIC LIGHTING	CONC. EMBEDDED	1	2	169	CIRCUIT X7 SEE PLAN NOTE 10 (1)
PIER 22C AESTHETIC LIGHTING	ATTACH TO STRUCT.	1	1	17	CIRCUIT X7 (1)
PIER 22C AESTHETIC LIGHTING	CONC. EMBEDDED	1	1	64	CIRCUIT X7 SEE PLAN NOTE 10 (1)
PIER 22C TO PIER 21 AESTHETIC LIGHTING	CONC. EMBEDDED	1	2	172	CIRCUIT X7 SEE PLAN NOTE 10 (1)
PIER 26 AESTHETIC LIGHTING	ATTACH TO STRUCT.	1	1	20	CIRCUIT X7 (1)
PIER 26 AESTHETIC LIGHTING	CONC. EMBEDDED	1	1	70	CIRCUIT X7 SEE PLAN NOTE 10 (1)
PIER 26 TO PIER 25 AESTHETIC LIGHTING	CONC. EMBEDDED	1	2	137	CIRCUIT X7 SEE PLAN NOTE 10 (1)
PIER 25 AESTHETIC LIGHTING	ATTACH TO STRUCT.	1	1	20	CIRCUIT X7 (1)
PIER 25 AESTHETIC LIGHTING	CONC. EMBEDDED	1	1	70	CIRCUIT X7 SEE PLAN NOTE 10 (1)
PIER 25 TO PIER 24 AESTHETIC LIGHTING	CONC. EMBEDDED	1	2	137	CIRCUIT X7 SEE PLAN NOTE 10 (1)
PIER 24 AESTHETIC LIGHTING	ATTACH TO STRUCT.	1	1	20	CIRCUIT X7 (1)
PIER 24 AESTHETIC LIGHTING	CONC. EMBEDDED	1	1	70	CIRCUIT X7 SEE PLAN NOTE 10 (1)
PIER 24 TO PIER 23 AESTHETIC LIGHTING	CONC. EMBEDDED	1	2	137	CIRCUIT X7 SEE PLAN NOTE 10 (1)
PIER 23 AESTHETIC LIGHTING	ATTACH TO STRUCT.	1	1	20	CIRCUIT X7 (1)
PIER 23 AESTHETIC LIGHTING	CONC. EMBEDDED	1	1	70	CIRCUIT X7 SEE PLAN NOTE 10 (1)
PIER 23 TO PIER 22 AESTHETIC LIGHTING	CONC. EMBEDDED	1	2	137	CIRCUIT X7 SEE PLAN NOTE 10 (1)
PIER 22 AESTHETIC LIGHTING	ATTACH TO STRUCT.	1	1	20	CIRCUIT X7 (1)
PIER 22 AESTHETIC LIGHTING	CONC. EMBEDDED	1	1	70	CIRCUIT X7 SEE PLAN NOTE 10 (1)
PIER 22 TO PIER 21 AESTHETIC LIGHTING	CONC. EMBEDDED	1	2	137	CIRCUIT X7 SEE PLAN NOTE 10 (1)
PIER 21 AESTHETIC LIGHTING	ATTACH TO STRUCT.	1	1	30	CIRCUIT X7 (1)
PIER 21 AESTHETIC LIGHTING	CONC. EMBEDDED	1	1	150	CIRCUIT X7 SEE PLAN NOTE 10 (1)
PIER 21 TO PIER 20 AESTHETIC LIGHTING	CONC. EMBEDDED	1	2	124	CIRCUIT X7 SEE PLAN NOTE 10 (1)
PIER 20 AESTHETIC LIGHTING	ATTACH TO STRUCT.	1	1	25	CIRCUIT X7 (1)
PIER 20 AESTHETIC LIGHTING	CONC. EMBEDDED	1	1	137	CIRCUIT X7 SEE PLAN NOTE 10 (1)
PIER 20 TO PIER 19 AESTHETIC LIGHTING	CONC. EMBEDDED	1	2	123	CIRCUIT X7 SEE PLAN NOTE 10 (1)
PIER 19 AESTHETIC LIGHTING	ATTACH TO STRUCT.	1	1	21	CIRCUIT X7 (1)
PIER 19 AESTHETIC LIGHTING	CONC. EMBEDDED	1	1	125	CIRCUIT X7 SEE PLAN NOTE 10 (1)
PIER 19 TO PIER 18 AESTHETIC LIGHTING	CONC. EMBEDDED	1	2	142	CIRCUIT X7 SEE PLAN NOTE 10 (1)
PIER 18 AESTHETIC LIGHTING	ATTACH TO STRUCT.	1	1	176	CIRCUIT X6 (1)
PIER 18 AESTHETIC LIGHTING	CONC. EMBEDDED	1	1	24	CIRCUIT X6 SEE PLAN NOTE 10 (1)
PIER 18 TO PIER 17 AESTHETIC LIGHTING	CONC. EMBEDDED	1	2	142	CIRCUITS X6, X7 SEE PLAN NOTE 10 (1)
PIER 17 AESTHETIC LIGHTING	ATTACH TO STRUCT.	1	1	171	CIRCUIT X6 (1)
PIER 17 AESTHETIC LIGHTING	CONC. EMBEDDED	1	1	24	CIRCUIT X6 SEE PLAN NOTE 10 (1)
PIER 17 TO PIER 16 AESTHETIC LIGHTING	CONC. EMBEDDED	1	2	142	CIRCUITS X6, X7 SEE PLAN NOTE 10 (1)
X0824 TO JUNCTION BOX	CONC. EMBEDDED	1	2	15	CIRCUIT X8 SEE PLAN NOTE 10 (1)
JUNCTION BOX TO JUNCTION BOX	CONC. EMBEDDED	1	2	158	CIRCUITS X8 SEE PLAN NOTE 10 (1)
HANDHOLE HH-4 TO CONTROLLER X	SCH 40 PLASTIC	1	3	20	EMPTY (1)
CAPPED END TO PIER 18 CAP	ATTACH TO STRUCT.	1	3	350	EMPTY (FOR FUTURE ARCH POWER) (1)
PIER 18 CAP TO PIER 18 HANDHOLE	CONC. EMBEDDED	1	3	55	EMPTY (FOR FUTURE ARCH POWER) SEE PLAN NOTE 10 (1)
PIER 18 HANDHOLE TO SERVICE INSTALLATION	SCH 40 PLASTIC	1	3	200	EMPTY (FOR FUTURE ARCH POWER) (1)
PIER 16 TO RAMP C ABUTMENT	ATTACH TO STRUCT.	3	2	1005	PRIVATE UTILITIES (EMPTY) (5)

LIGHTING QUANTITIES

ROADWAY LIGHTING GENERAL NOTES

A. ALL ELECTRICAL WORK SHALL CONFORM TO NATIONAL, STATE, AND LOCAL CODES.

B. IT IS THE INTENT OF THESE PLANS AND SPECIFICATIONS TO PROVIDE A COMPLETE AND PROPERLY OPERATING ELECTRICAL LIGHTING SYSTEM. THE EQUIPMENT SHALL BE FURNISHED AS SPECIFIED AND SHALL INCLUDE ALL INCIDENTAL ITEMS NECESSARY TO PROVIDE A COMPLETE WORKING SYSTEM. INCIDENTAL ITEMS SHALL INCLUDE, BUT NOT BE LIMITED TO THE FOLLOWING ITEMS: ANCHORAGES, MOUNTING HARDWARE, CONNECTORS, LUGS, FUSES, ETC.

C. CONTRACTOR SHALL FIELD VERIFY EXACT LOCATIONS, QUANTITIES, AND TYPE OF UTILITIES IN AREAS TO BE EXCAVATED PRIOR TO THE COMMENCEMENT OF ANY WORK AND SHALL HAND EXCAVATE AS REQUIRED IN ORDER TO NOT INTERRUPT ANY EXISTING SERVICES. SEE CIVIL DRAWINGS FOR LOCATIONS OF EXISTING AND NEW UTILITIES. IF, IN PERFORMING WORK, DAMAGE TO EXISTING UTILITIES OCCURS, THE CONTRACTOR SHALL NOTIFY UTILITY IMMEDIATELY AND PAY ANY COST INCURRED FOR REPAIR OR REPLACEMENT.

D. ELECTRICAL EQUIPMENT, RACEWAY, ETC. ARE SHOWN IN APPROXIMATE LOCATIONS ONLY. CONTRACTOR SHALL INSTALL ELECTRICAL EQUIPMENT, RACEWAYS, ETC. WHERE DIRECTED BY THE ENGINEER IN ORDER TO BEST SUIT JOB CONDITIONS.

E. THE CONTRACTOR IS RESPONSIBLE FOR LOCATING ALL EXISTING STATE OWNED LIGHTING AND/OR TRAFFIC SIGNAL UTILITIES WITHIN THE PROJECT LIMITS.

F. NO SPLICING OF EXISTING-TO-NEW WIRING IS ALLOWED INSIDE ELECTRICAL DUCTS. ALL WIRING INTERCONNECTIONS SHALL BE INSTALLED IN ACCESSIBLE AREAS AND SHALL BE MADE WITH IOWA DOT APPROVED CONNECTORS.

G. SEE IOWA DOT STANDARD ROAD PLAN LI-101 FOR LIGHT POLE CALLOUT DEFINITION. SEE LAYOUT LEGEND ON LI-101.

ELECTRICAL PLAN NOTES

1. STATE LIGHTS INSTALLED ON BRIDGE PARAPETS/RETAINING WALLS/BARRIER WALLS: INSTALL PROPOSED LIGHT POLE, MAST ARM AND LUMINAIRE. LIGHT POLE SHALL BE MOUNTED ON BRIDGE STRUCTURE AS PER THE TYPE 1 DETAIL ON SHEET P.29. REFER TO STRUCTURAL DETAILS FOR LIGHT JUNCTION BOX LOCATION AND CONDUIT ROUTING DETAILS.

2. RAMP LIGHTING AT BIKE PATH:
INSTALL PROPOSED LIGHT POLE, MAST ARM AND LUMINAIRE. LIGHT POLE SHALL BE MOUNTED ON BRIDGE STRUCTURE AS PER THE TYPE 2 DETAIL ON SHEET P.30. REFER TO STRUCTURAL DETAILS FOR LIGHT JUNCTION BOX LOCATION AND CONDUIT ROUTING DETAILS.

3. BIKE PATH LIGHTING:
INSTALL PROPOSED LIGHT POLE, MAST ARM AND LUMINAIRE. LIGHT POLE SHALL BE MOUNTED ON BRIDGE STRUCTURE AS PER THE TYPE 3 DETAIL ON SHEET P.30. REFER TO STRUCTURAL DETAILS FOR LIGHT JUNCTION BOX LOCATION AND CONDUIT ROUTING DETAILS.

4. INSTALL PROPOSED CONTROL CABINET (PAD MOUNTED) AND FOUNDATION PER LI-152.

5. INSTALL PRECAST HANDHOLE, TYPE 2, PER LI-103.

6. EMBEDDED JUNCTION BOX EMBEDDED IN THE CONCRETE BARRIER RAIL SHALL BE INCIDENTAL TO CONCRETE BARRIER RAILING.

7. INSTALL STAINLESS STEEL JUNCTION BOX, SIZED PER LI-104.

8. PULL CIRCUIT TO END LOCATION. INSTALL FEMALE PORTION ONLY OF CONNECTOR. TAPE AND SEAL FOR FUTURE CONNECTION.

9. CONDUIT SHALL BE CAPPED AND SEALED FOR FUTURE CONNECTION.

10. EMBEDDED CONDUIT EMBEDDED IN THE CONCRETE BARRIER SHALL BE INCIDENTAL TO CONCRETE BARRIER RAILING.

11. INSTALL EMBEDDED RISER IN PIER PER DETAIL. PIER RISER DETAILS ARE SHOWN ON LIGHTING SHEETS P.22 AND P.28. CONDUIT SHALL BE INCIDENTAL TO STRUCTURAL CONCRETE.

12. UNDERDECK LIGHTING:
INSTALL PROPOSED UNDERDECK LIGHTING PER DETAIL SHOWN ON SHEET P.31.

13. CONDUIT/JUNCTION BOXES:
ANY ATTACHMENTS VISIBLE AGAINST PAINTED PORTIONS OF THE BRIDGE SUPERSTRUCTURE SHALL BE PAINTED TO MATCH THE BRIDGE STRUCTURAL STEEL. SEE STRUCTURAL PLANS FOR PAINTING LIMITS AND DETAILS.

14. 3-2" PVC COATED GALVANIZED RIGID STEEL CONDUIT (EMPTY) FOR FUTURE USE BY PRIVATE UTILITIES AS DETERMINED BY THE DOT.

15. ALL MECHANICAL CONCRETE ANCHORS OR MECHANICAL INSERTS SHALL CONFORM TO MATERIALS IM 453.09. ALL COMPONENTS OF THE ATTACHMENT ASSEMBLIES TO CONCRETE SHALL BE HOT DIP OR MECHANICALLY GALVANIZED STEEL ONLY. ELECTRODEPOSITED ZINC COATING WILL NOT BE ALLOWED. ALL CONCRETE ANCHORS SHALL BE POST-INSTALLED MECHANICAL CONCRETE ANCHORS OR CAST-IN-PLACE INSERTS. CONTRACTOR SHALL AVOID ALL REINFORCING WHEN DRILLING HOLES FOR CONCRETE ANCHORS.

CONCRETE ANCHORS IN THE BOTTOM OF THE BRIDGE DECK SHALL BE CAST-IN-PLACE ONLY.

LIGHTING GENERAL & PLAN NOTES

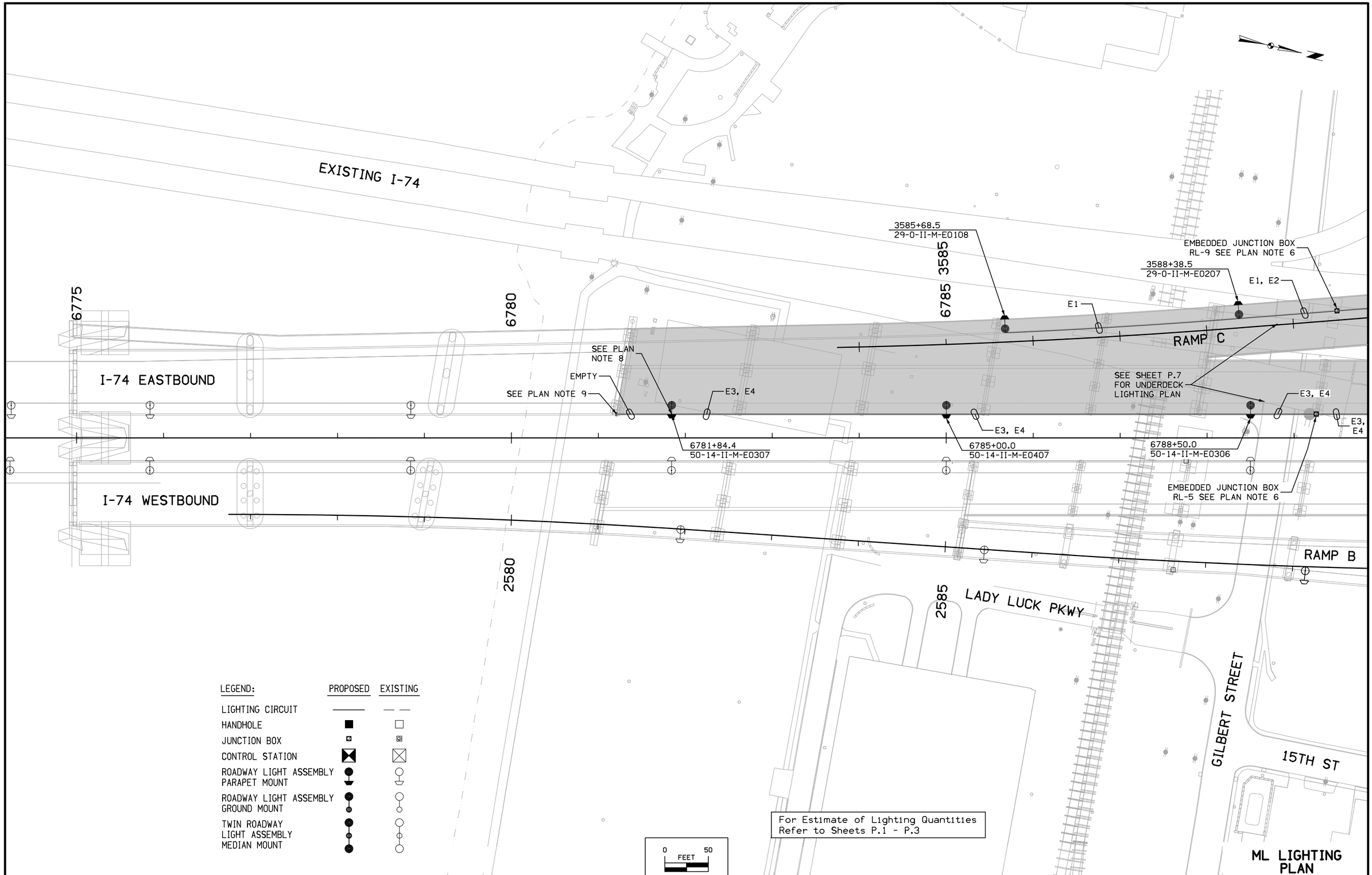

ENGLISH	IOWA DOT	DESIGN TEAM BENESCH	SCOTT COUNTY	PROJECT NUMBER BRFIM-074-1(200)5--05-82	SHEET NUMBER P.5

12:21:34 PM untitled c:\pwise_work\do_not_delete\dms01408\82074122-AB-P-510.sht.sht

GILBERT ST
GRANT ST
US-67
KIMBERLY RD
14TH ST
BROWN ST
MISSISSIPPI BLVD
RAMP A
RAMP B
RAMP C
RAMP D
I-74 EASTBOUND
I-74 WESTBOUND
3590
6790
3595
6795
1500
6800
1505
6805
2590
2595
4500

E1, E2
SEE PLAN NOTE 9
SEE SHEET P.7 FOR UNDERDECK LIGHTING PLAN
EMBEDDED JUNCTION BOX RL-1 SEE PLAN NOTES 6 & 11
E3, E4, E7, E8
E7, E8
6796+84.4
50-14-II-M-E0701
E3, E4
E3, E4
E3, E4
E3, E4
6791+00.0
50-14-II-M-E0404
6793+84.4
50-14-II-M-E0304
HANDHOLE HH-1
SEE PLAN NOTE 5
EMBEDDED JUNCTION BOX RL-2 SEE PLAN NOTE 6
EXISTING LIGHTING CABINET E
E7, E8
EMBEDDED JUNCTION BOX RL-3 SEE PLAN NOTES 6
6799+84.9
50-14-II-M-E0801
E7
SEE PLAN NOTE 9
EMPTY
EMPTY
SEE PLAN NOTE 9
6802+84.8
50-14-II-M-E0702
SEE PLAN NOTE 9

LEGEND:

	PROPOSED	EXISTING
LIGHTING CIRCUIT	———	— —
HANDHOLE	■	□
JUNCTION BOX	▣	▣
CONTROL STATION	⊠	⊠
ROADWAY LIGHT ASSEMBLY PARAPET MOUNT	●	○
ROADWAY LIGHT ASSEMBLY GROUND MOUNT	●	○
TWIN ROADWAY LIGHT ASSEMBLY MEDIAN MOUNT	●	○

For Estimate of Lighting Quantities Refer to Sheets P.1 - P.3

0 50
FEET

ML LIGHTING PLAN

ENGLISH	IOWA DOT	DESIGN TEAM BENESCH	SCOTT COUNTY	PROJECT NUMBER BRFIM-074-1(200)5--05-82	SHEET NUMBER P.6

12:21:50 PM untitled c:\pwise_work\do_not_delete\dms01408\82074122-AB-P-510.sht.sht

EXISTING I-74 EASTBOUND

EMBEDDED JUNCTION BOX RL-9

E1, E2

3588+81.8
20-0-IV-S-E0107

E1, E2

JUNCTION BOX RL-8
SEE PLAN NOTE 7

E1

3589+19.2
20-0-IV-S-E0206

6789+08.87
20-0-IV-S-E0305

E3

JUNCTION BOX RL-7
SEE PLAN NOTE 7

E4

E4

E3

JUNCTION BOX RL-6
SEE PLAN NOTE 7

E3, E4

EMBEDDED JUNCTION BOX RL-5

6788+66.0
20-0-IV-S-E0406

6789+02.8
20-0-IV-S-E0405

3585

6785

3590

6790

RAMP C

I-74 EASTBOUND

I-74 WESTBOUND

RAMP B

6795+79.1
20-0-IV-S-E0302

6795+01.4
20-0-IV-S-E0301

JUNCTION BOX RL-4
SEE PLAN NOTE 7

E3

E3

E3

6796+33.7
20-0-IV-S-E0303

JUNCTION BOX RL-3
SEE PLAN NOTE 7

6796+28.4
20-0-IV-S-E0403

E3, E4

EMBEDDED JUNCTION BOX RL-2

E4

E4

6794+96.2
20-0-IV-S-E0401

6795+50.8
20-0-IV-S-E0402

6795

3595

US 67 / GRANT ST

RAMP A

RAMP D

LADY LUCK PKWY

2585

LADY LUCK PKWY

GILBERT ST

2590

2595

15TH ST

STATE ST

LEGEND:	PROPOSED	EXISTING
LIGHTING CIRCUIT		
HANDHOLE		
JUNCTION BOX		
CONTROL STATION		
ROADWAY LIGHT ASSEMBLY PARAPET MOUNT		
ROADWAY LIGHT ASSEMBLY GROUND MOUNT		
TWIN ROADWAY LIGHT ASSEMBLY MEDIAN MOUNT		
UNDERPASS LUMINAIRE		

0 FEET 50

For Estimate of Lighting Quantities
Refer to Sheets P.1 - P.3

UNDERDECK LIGHTING PLAN

ENGLISH	IOWA DOT	DESIGN TEAM BENESCH	SCOTT COUNTY	PROJECT NUMBER BRFIM-074-1(200)5--05-82	SHEET NUMBER P.7

EXISTING I-74

PIER 17
4 LC LUMINAIRES
14 LD LUMINAIRES
12 JUNCTION BOXES
CIRCUIT X6
(SEE DETAIL SHEETS
P.17-P.18 & P.20)

PIER 18
4 LC LUMINAIRES
14 LD LUMINAIRES
12 JUNCTION BOXES
CIRCUIT X6
(SEE DETAIL SHEETS
P.17-P.18 & P.21)

PIER 19
4 LE LUMINAIRES
5 JUNCTION BOXES
CIRCUIT X7
(SEE DETAIL SHEETS
P.19 & P.23)

PIER 20
5 LE LUMINAIRES
6 JUNCTION BOXES
CIRCUIT X7
(SEE DETAIL SHEETS
P.19 & P.24)

PIER 21
5 LE LUMINAIRES
8 JUNCTION BOXES
CIRCUIT X7
(SEE DETAIL SHEETS
P.19 & P.25)

PIER 22C
3 LE LUMINAIRES
4 JUNCTION BOXES
CIRCUIT X7
(SEE DETAIL SHEETS
P.19 & P.26)

PIER 22
3 LE LUMINAIRES
4 JUNCTION BOXES
CIRCUIT X7
(SEE DETAIL SHEETS
P.19 & P.27)

6775 6780 6785 3585 6790 3590

PIER 16
(BY OTHERS)

BY OTHERS

SEE PLAN NOTE 9

6782+98.3
17-0-II-M-X0824

SEE PLAN
NOTE 14

X8

JUNCTION BOX (BY OTHERS)

HANDHOLE HH-4

EMPTY

X6, X7

X6, X7

X7

X7

X7

X7

X7

X7

RAMP C

I-74 EASTBOUND

CONNECT TO EXISTING
JUNCTION BOX

CONTROLLER X

I-74 WESTBOUND

RAMP B

2580

2585

LADY LUCK PKWY

2590

GILBERT ST

15TH ST

LEGEND:

	PROPOSED	EXISTING
LIGHTING CIRCUIT		
HANDHOLE		
JUNCTION BOX		
CONTROL STATION		
ROADWAY LIGHT ASSEMBLY PARAPET MOUNT		
ROADWAY LIGHT ASSEMBLY GROUND MOUNT		
TWIN ROADWAY LIGHT ASSEMBLY MEDIAN MOUNT		

For Estimate of Lighting Quantities
Refer to Sheets P.1 - P.3

0 FEET 50

AESTHETIC LIGHTING PLAN

ENGLISH	IOWA DOT	DESIGN TEAM BENESCH	SCOTT COUNTY	PROJECT NUMBER BRFIM-074-1(200)5--05-82	SHEET NUMBER P.8

12:22:20 PM untitled c:\pwise_work\do_not_delete\dms01408\82074122-AB-P-510.sht.sht

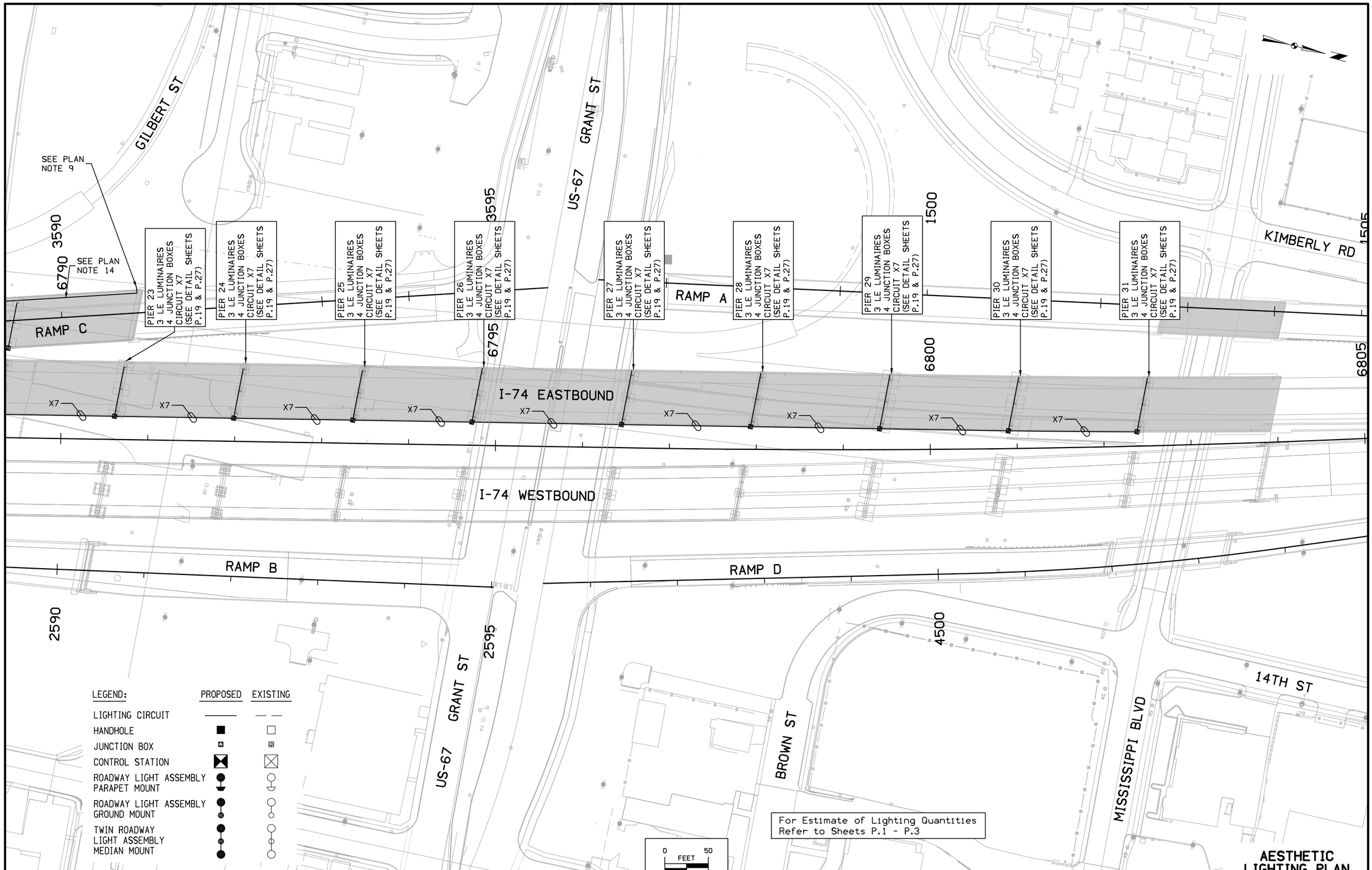

ENGLISH	IOWA DOT	DESIGN TEAM BENESCH	SCOTT COUNTY	PROJECT NUMBER BRFIM-074-1(200)5--05-82	SHEET NUMBER P.9

12:22:36 PM untitled c:\pwise_work\do_not_delete\dms01408\82074122-AB-P-510.sht.sht

EXISTING I-74

6775

6780

3585

6785

JUNCTION BOX AP-1
ATTACHED TO STRUCTURE
(SEE PLAN NOTE 7)

PIER 18

RAMP C

SEE SHEET P.22
FOR PIER ELEVATION
AND RISER DETAIL

EMBEDDED RISER IN PIER
(SEE PLAN NOTE 11)

I-74 EASTBOUND

FUTURE CONDUIT /
CONDUCTORS

SEE PLAN NOTE 9

EMPTY

EMPTY

HANDHOLE HH-5
(SEE PLAN NOTE 5)

EMPTY

JUNCTION BOX AP-2 & AP-3
ATTACHED TO STRUCTURE
(SEE PLAN NOTE 7)

PIER 16

PIER 17

CONDUIT SUPPORTED BY HANGER
SYSTEM. SEE SHEETS P.32 - P.36.

I-74 WESTBOUND

RAMP B

2580

TO SERVICE INSTALLATION
INSTALLED AS PART OF CONTRACT
BRFIM-074-1(199)5--05-82

2585

LADY LUCK PKWY

GILBERT ST

15TH ST

LEGEND:	PROPOSED	EXISTING
LIGHTING CIRCUIT	———	— —
HANDHOLE	■	□
JUNCTION BOX	◘	◙
CONTROL STATION	⧓	⊠
ROADWAY LIGHT ASSEMBLY PARAPET MOUNT	●	○
ROADWAY LIGHT ASSEMBLY GROUND MOUNT	●	○
TWIN ROADWAY LIGHT ASSEMBLY MEDIAN MOUNT	●	○

For Estimate of Lighting Quantities
Refer to Sheets P.1 - P.3

0 50
FEET

ARCH BRIDGE
POWER FEED PLAN

ENGLISH	IOWA DOT	DESIGN TEAM BENESCH	SCOTT COUNTY	PROJECT NUMBER BRFIM-074-1(200)5--05-82	SHEET NUMBER P.10

12:22:50 PM untitled c:\pwise_work\do_not_delete\dms01408\82074122-AB-P-510.sht.sht

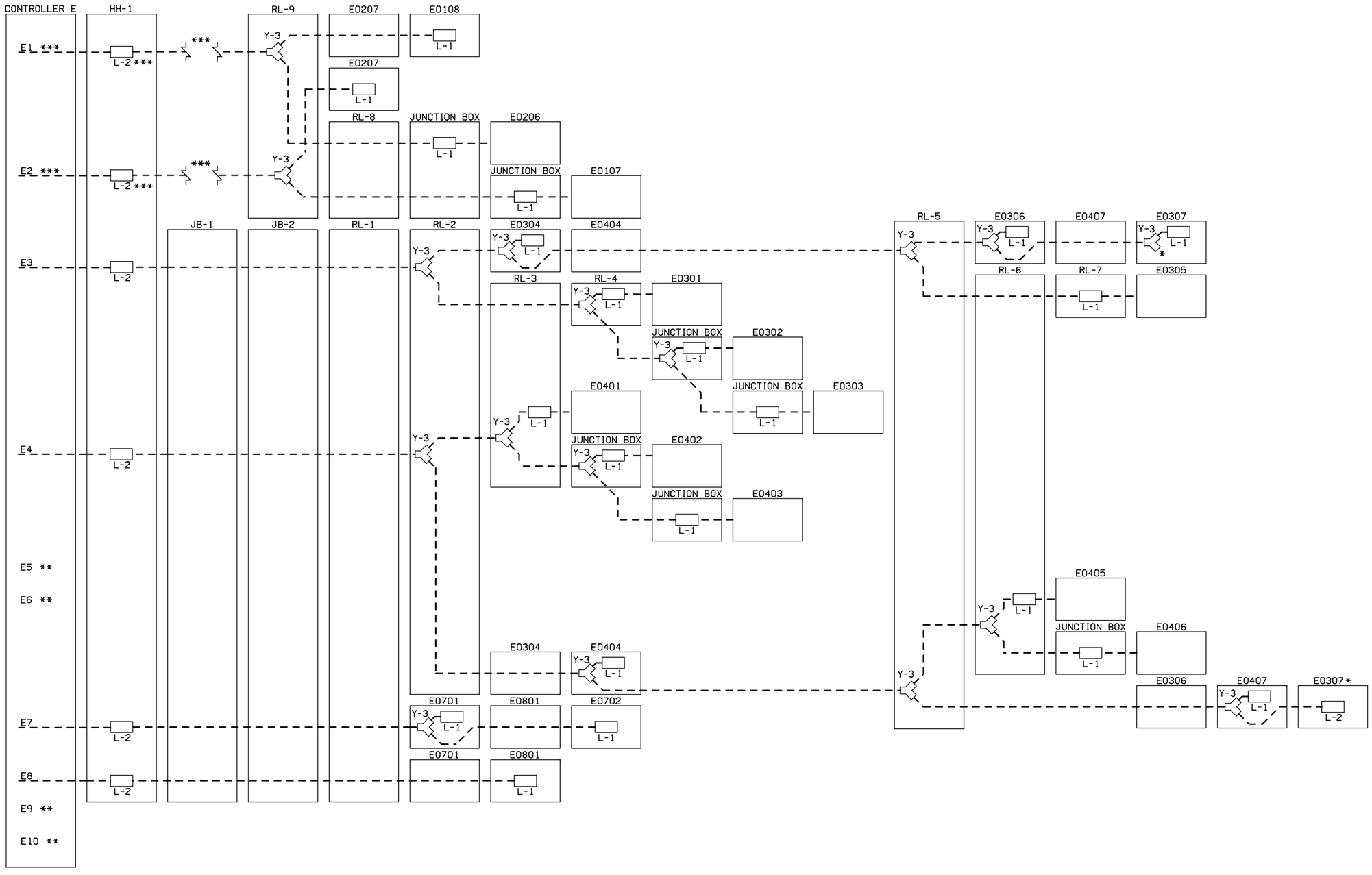

EXISTING CABINET E WIRING DETAIL - 200 AMP MAIN

* SEE PLAN NOTE 8

** FUTURE CIRCUIT

*** CONTINUED CIRCUIT - NOT PART OF THIS CONTRACT

LIGHTING DETAILS

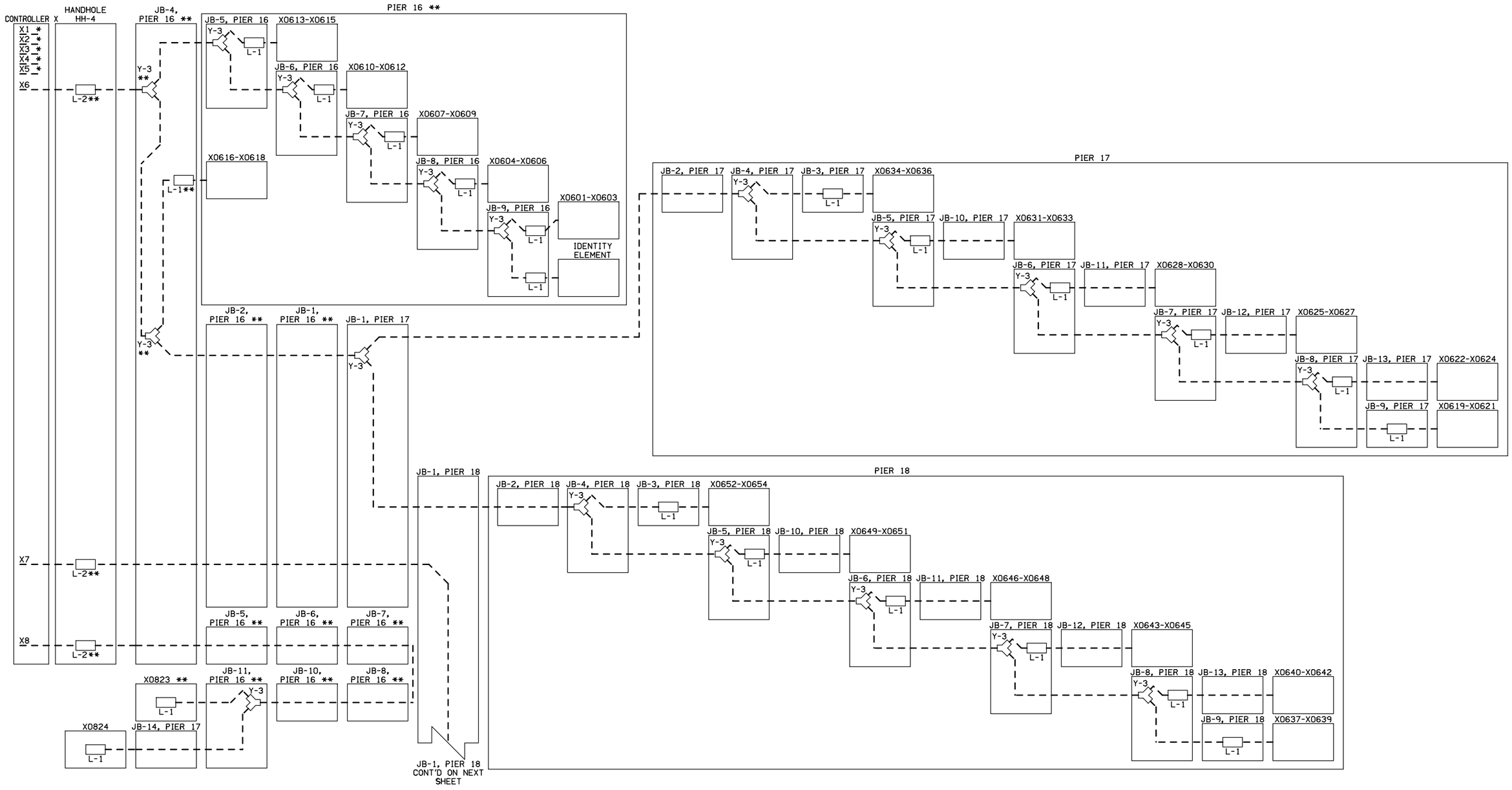

CABINET X WIRING DETAIL - 200 AMP MAIN

* FUTURE CIRCUIT
** BY OTHERS

LIGHTING DETAILS

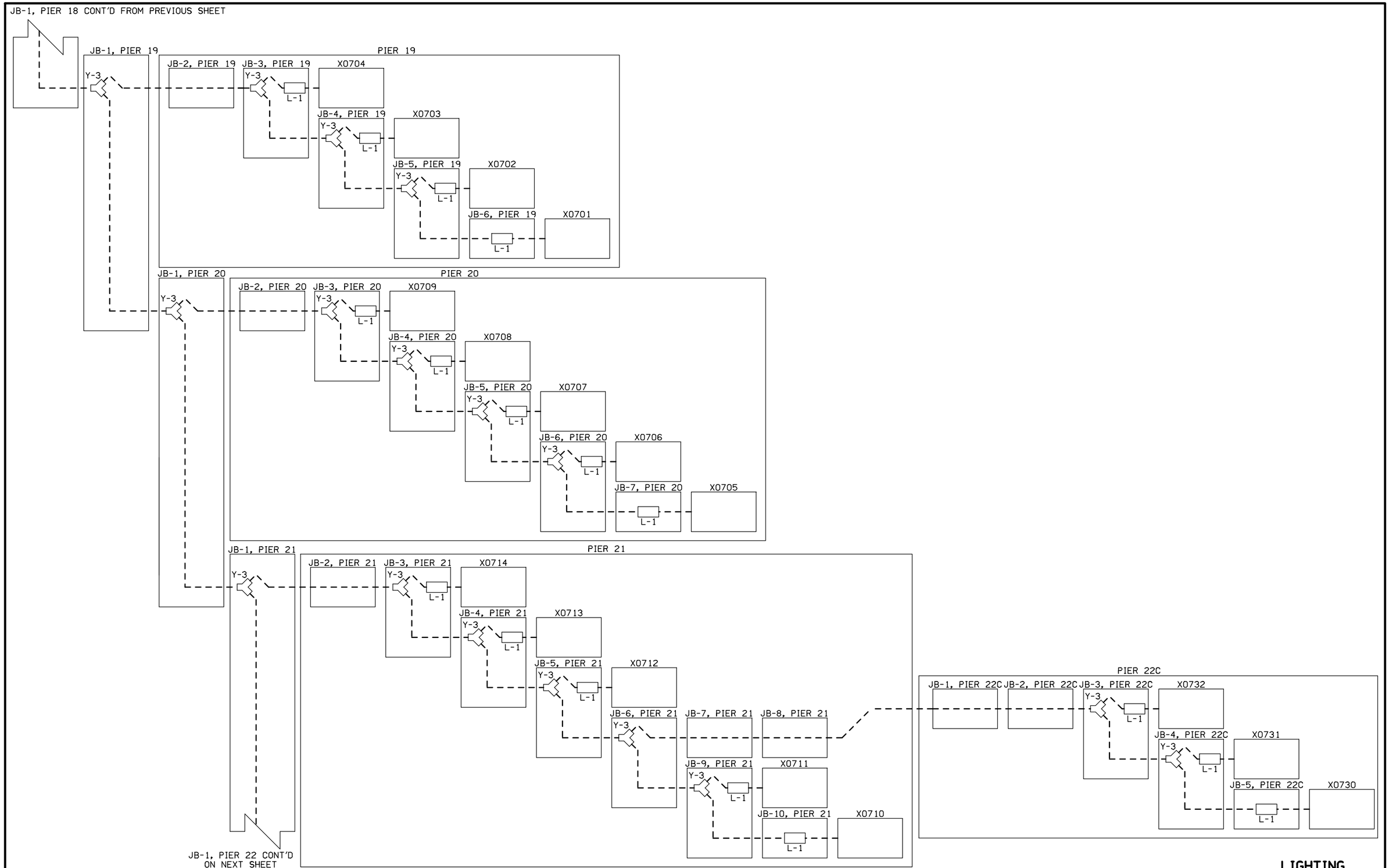

CABINET X WIRING DETAIL - 200 AMP MAIN (CONT'D)

LIGHTING DETAILS

ENGLISH	IOWA DOT	DESIGN TEAM BENESCH	SCOTT COUNTY	PROJECT NUMBER BRFIM-074-1(200)5--05-82	SHEET NUMBER P.13

12:23:16 PM untitled c:\pwise_work\do_not_delete\dms01408\82074122-AB-P-510.sht.sht

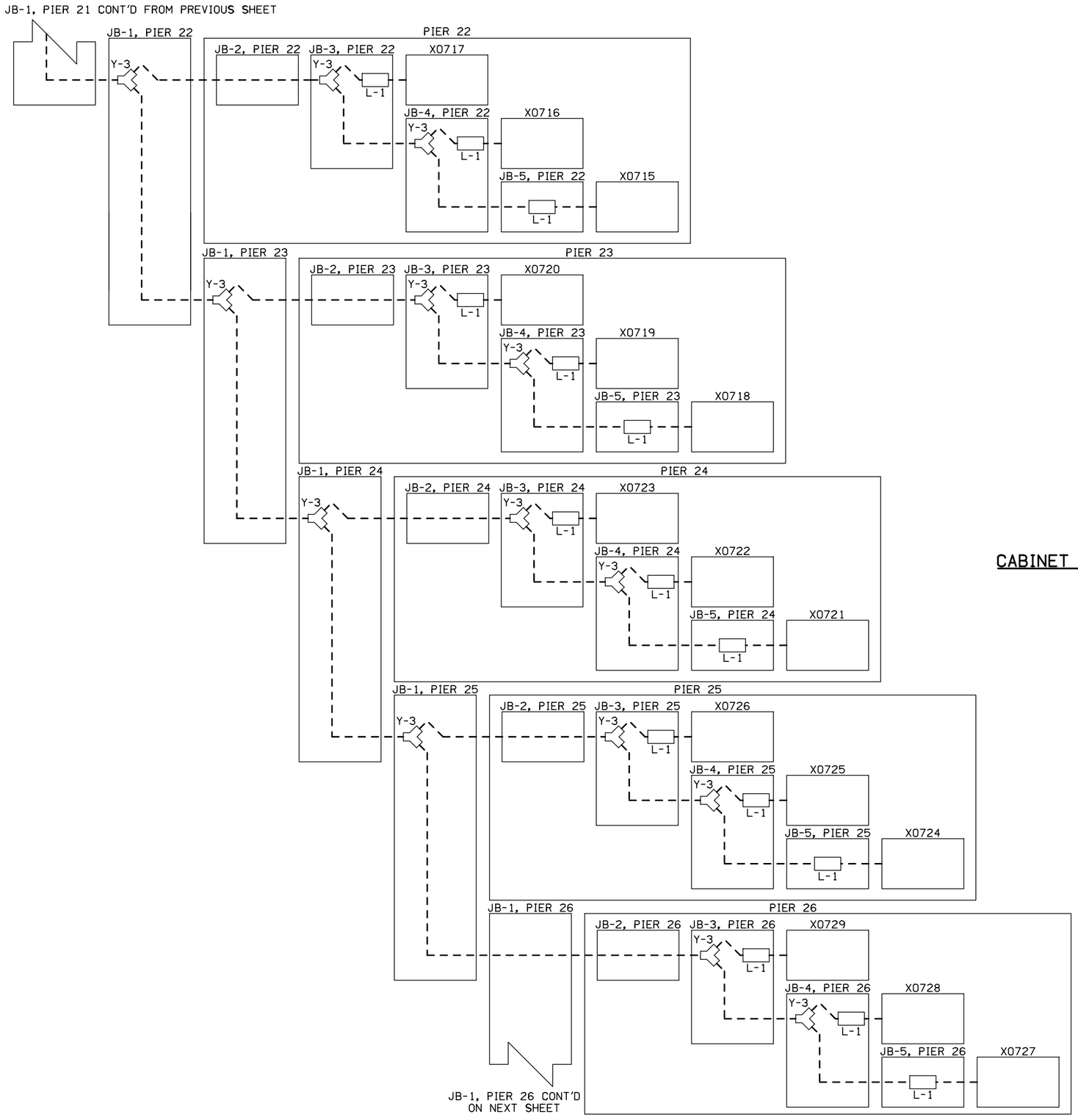

CABINET X WIRING DETAIL - 200 AMP MAIN (CONT'D)

LIGHTING DETAILS

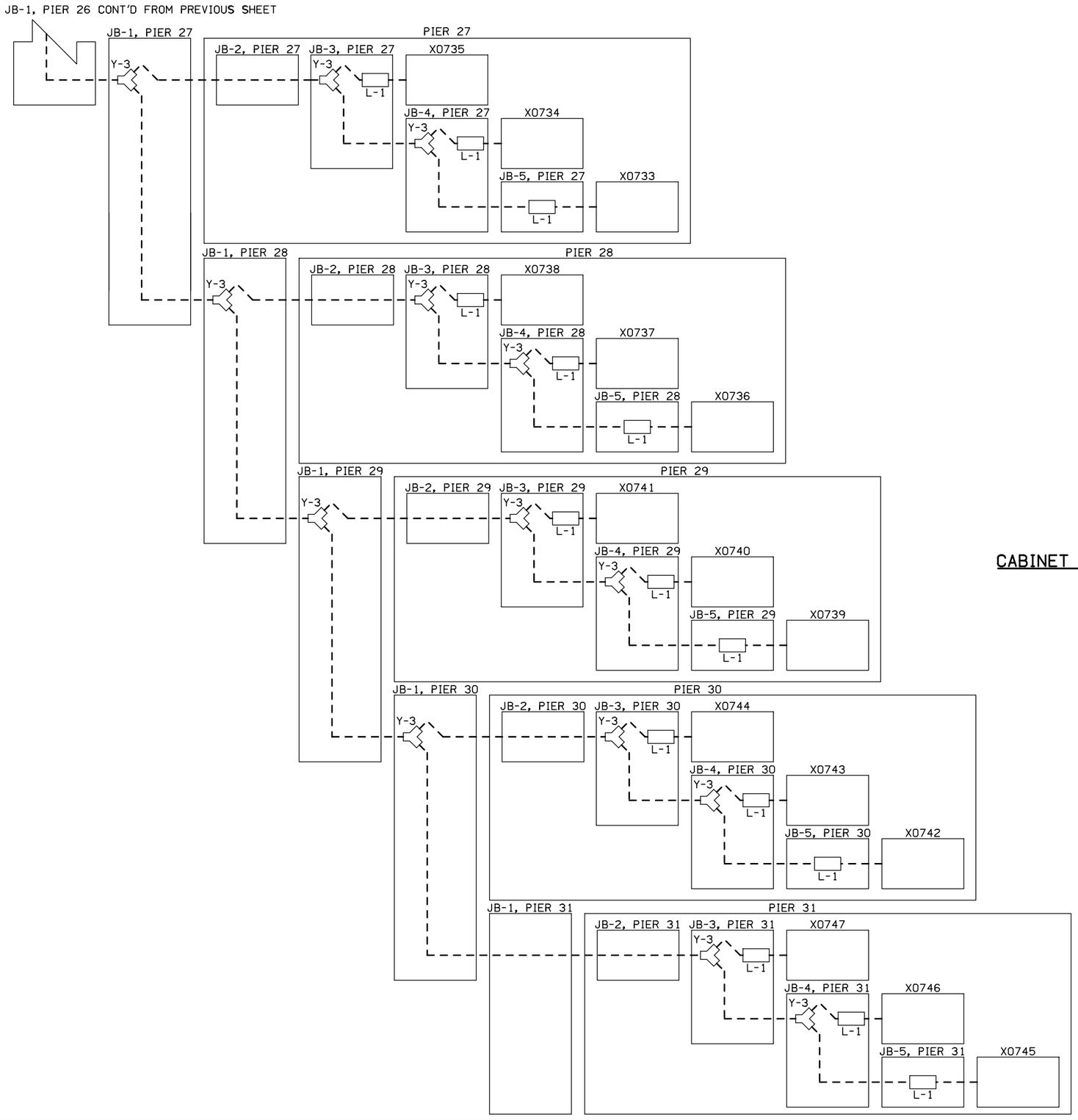

CABINET X WIRING DETAIL - 200 AMP MAIN (CONT'D)

LIGHTING DETAILS

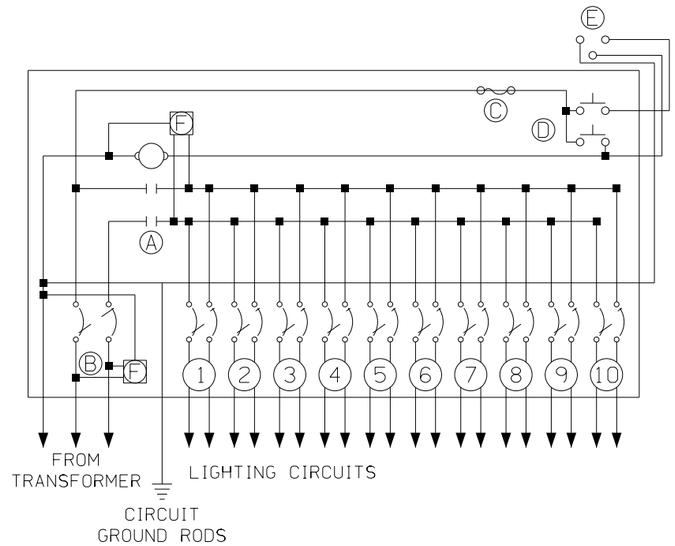

A. CONTACTOR (2P.)
B. LINE BREAKER (2P.) - 200 AMP
C. CONTROL FUSE
D. TEST SWITCH
E. PHOTOCELL
F. SURGE SUPRESSOR
1 THRU 10. BRANCH CIRCUIT BREAKERS (2P.)
1. ROADWAY LIGHTS US-67 RAMPS A AND C
2. ROADWAY LIGHTS US-67 RAMPS A AND C
3. ROADWAY LIGHTS I-74 MAINLINE EASTBOUND SOUTH OF US-67
4. ROADWAY LIGHTS I-74 MAINLINE EASTBOUND SOUTH OF US-67
5. FUTURE - ROADWAY LIGHTS I-74 MAINLINE - I-74 WESTBOUND SOUTH OF US-67
6. FUTURE - ROADWAY LIGHTS I-74 MAINLINE - I-74 WESTBOUND SOUTH OF US-67
7. ROADWAY LIGHTS I-74 MAINLINE - NORTH OF US-67
8. ROADWAY LIGHTS I-74 MAINLINE - NORTH OF US-67
9. FUTURE - US-67 RAMPS B AND D
10. FUTURE - US-67 RAMPS B AND D

CIRCUIT E SCHEMATIC DIAGRAM

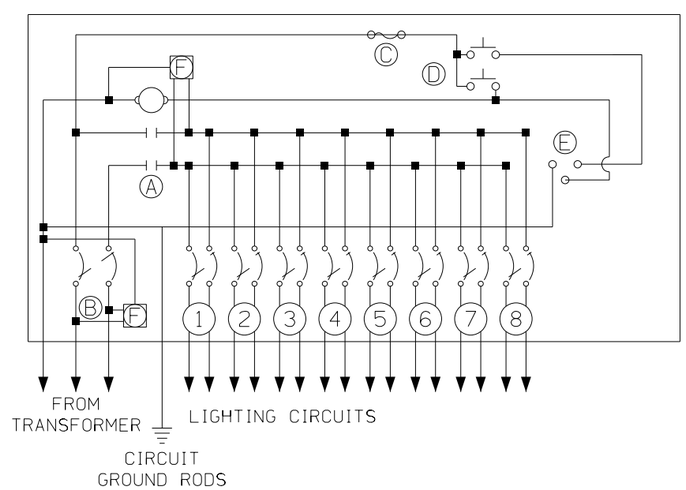

A. CONTACTOR (2P.)
B. LINE BREAKER (2P.) - 200 AMP
C. CONTROL FUSE
D. TEST SWITCH
E. ASTRONOMICAL CLOCK
F. SURGE SUPRESSOR
1 THRU 8. BRANCH CIRCUIT BREAKERS (2P.)
1. FUTURE EB ARCH BRIDGE AESTHETIC LIGHTING
2. FUTURE EB ARCH BRIDGE AESTHETIC LIGHTING
3. FUTURE EB ARCH BRIDGE AESTHETIC LIGHTING
4. FUTURE EB ARCH BRIDGE AESTHETIC LIGHTING
5. FUTURE EB APPROACH PIERS 15-16 AESTHETIC LIGHTING
6. EB VIADUCT PIERS AESTHETIC LIGHTING
7. EB VIADUCT PIERS AESTHETIC LIGHTING
8. EB BRIDGE BIKE TRAIL LIGHTING

CIRCUIT X SCHEMATIC DIAGRAM

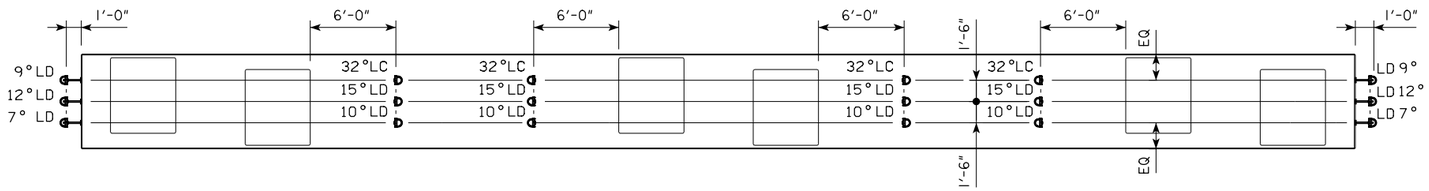

AESTHETIC LIGHTING RIVER PIER CAP - SECTION A-A

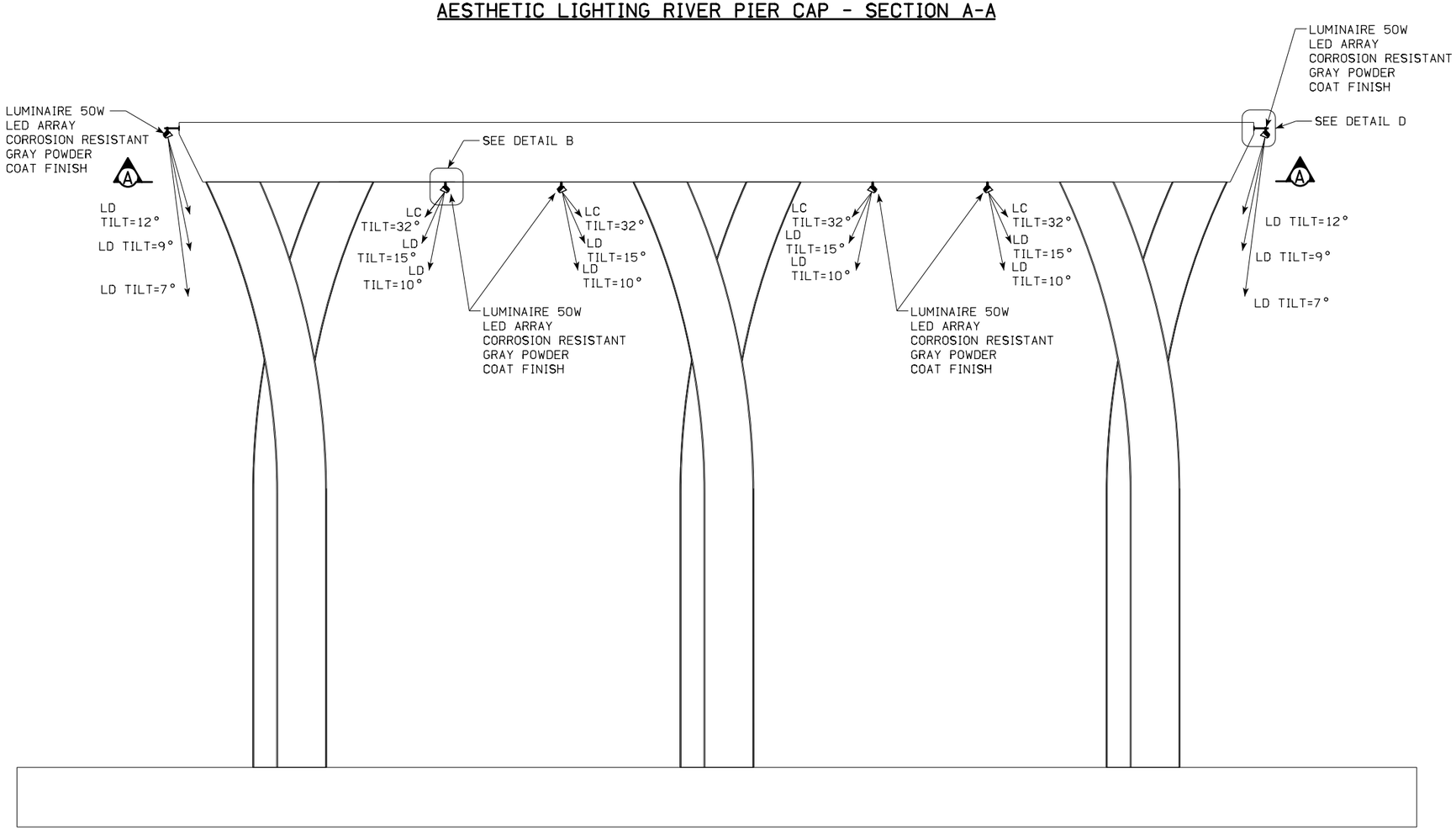

AESTHETIC LIGHTING RIVER PIER ELEVATION

NOTES:

1. LUMINAIRE TO BE AIMED AT THE NEAREST PIER LEG. TILT THE FIXTURE THE ANGLE SPECIFIED UP FROM NADIR. THE SPECIFIED ANGLE CAN BE FOUND NEXT TO EACH FIXTURE LABEL. AFTER AIMING OF ALL FIXTURES HAS BEEN APPROVED BY THE ENGINEER, APPLY THREADLOCKER TO FASTENERS TO PREVENT LOOSENING FROM SHOCK AND VIBRATION.

2. SEE SHEET NUMBER P.18 AESTHETIC LIGHTING RIVER PIER DETAILS IA PIERS 17 THRU 18 FOR MOUNTING DETAILS B AND D AND ATTACHMENT DETAILS C AND E.

AESTHETIC LIGHTING RIVER PIERS 17-18 ELEVATION & PLAN

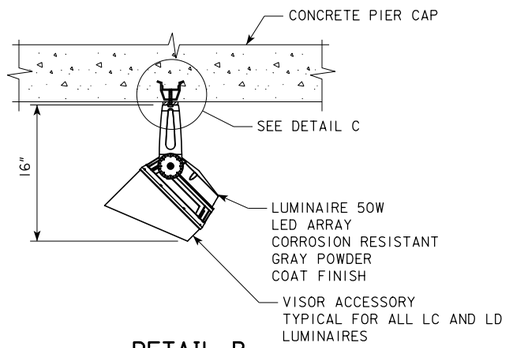

DETAIL B
RIVER PIER CAP MOUNTING

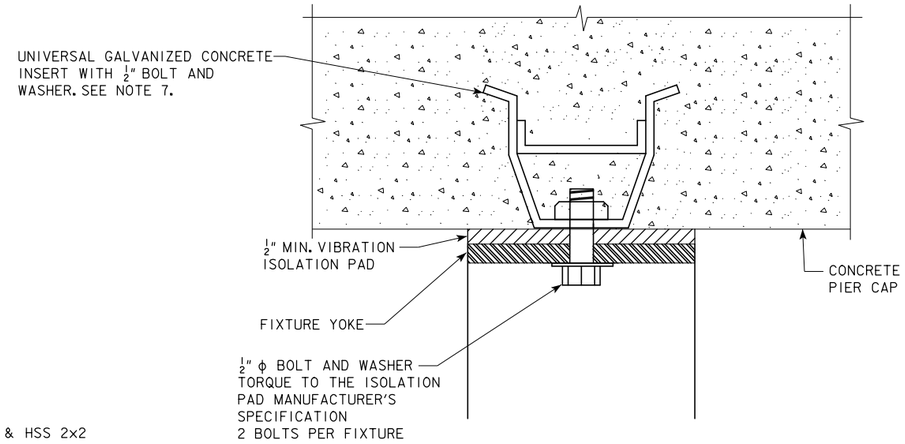

DETAIL C
RIVER PIER CAP FIXTURE ATTACHMENT

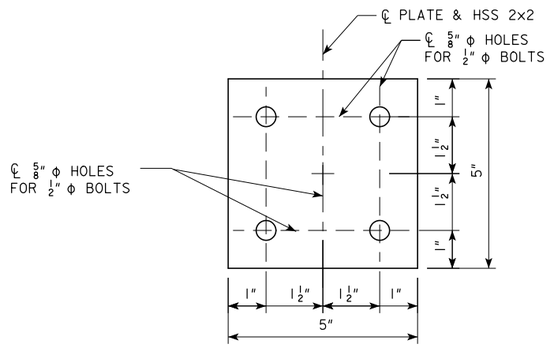

BASE PLATE DETAIL

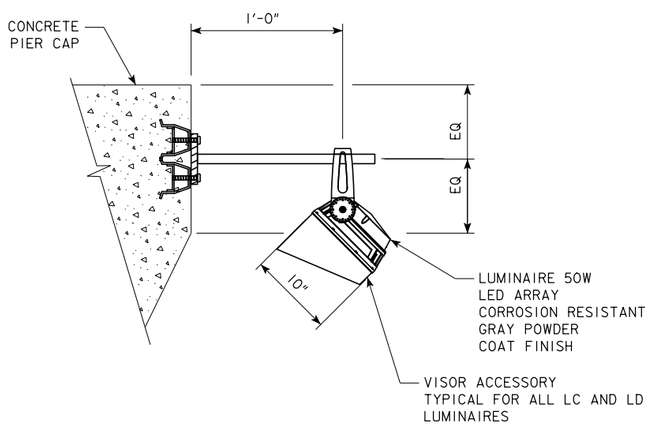

DETAIL D
RIVER PIER CAP OUTER MOUNTING
FOR FIXTURE ATTACHMENT, SEE DETAIL E

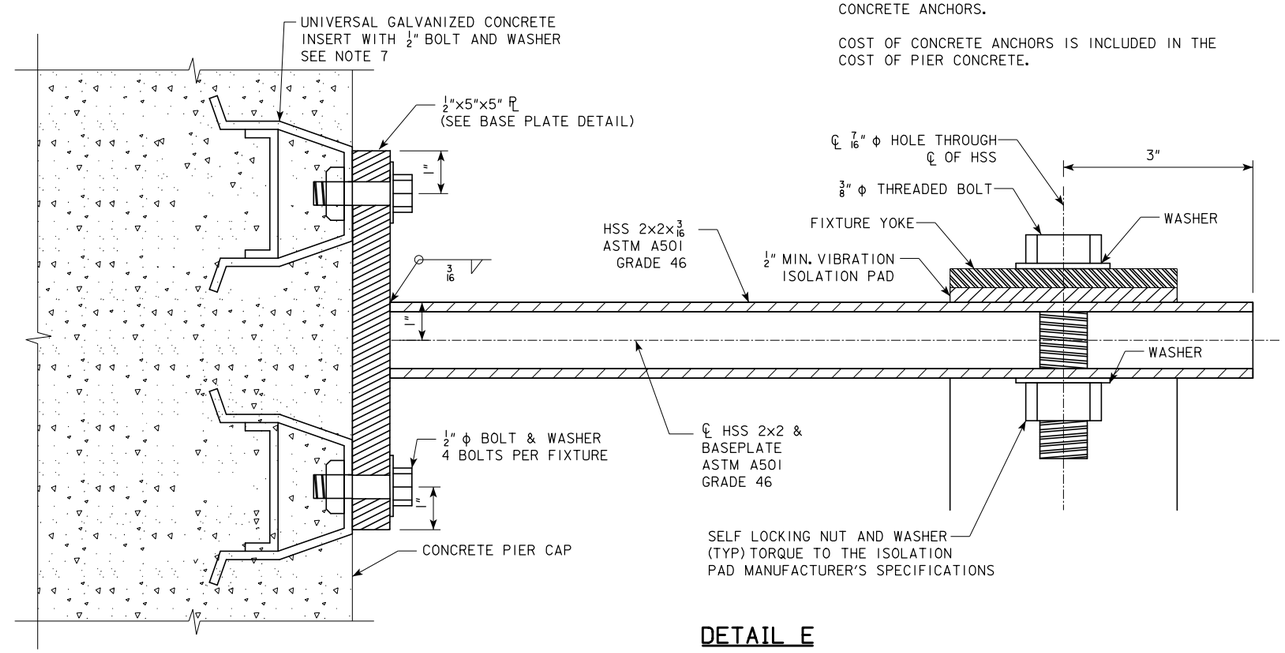

DETAIL E
RIVER PIER CAP OUTER FIXTURE ATTACHMENT

NOTES:

1. SEE SHEETS NUMBER P.17 AND AESTHETIC LIGHTING RIVER PIER ELEVATION AND PLAN IA PIERS 17 THRU 18 FOR FIXTURE LOCATIONS AND AIMING INFORMATION.

2. AESTHETIC LUMINAIRE AND ISOLATION PAD SHALL BE SUPPLIED BY OTHERS. SEE SPECIAL PROVISION FOR "AESTHETIC LIGHT, INSTALL ONLY".

3. BRACKET ASSEMBLIES SHALL BE GALVANIZED STEEL, WITH A NATURAL (NO PAINT) FINISH.

4. SUBMIT SHOP DRAWINGS FOR LUMINAIRE BRACKET ASSEMBLIES.

5. BOLTS, NUTS AND WASHERS SHALL BE IN ACCORDANCE TO ASTM A 307. BOLTS, NUTS AND WASHERS SHALL BE GALVANIZED IN ACCORDANCE WITH ASTM F 2329.

6. ALL STRUCTURAL STEEL, EXCEPT AS NOTED, SHALL BE GALVANIZED IN ACCORDANCE WITH THE STANDARD SPECIFICATIONS AND CONFORM TO ASTM A709 GRADE 36.

7. ALL MECHANICAL CONCRETE ANCHORS OR MECHANICAL INSERTS SHALL CONFORM TO MATERIALS IM 453.09. ALL COMPONENTS OF THE ATTACHMENT ASSEMBLIES TO CONCRETE SHALL BE HOT DIP OR MECHANICALLY GALVANIZED STEEL ONLY. ELECTRODEPOSITED ZINC COATING WILL NOT BE ALLOWED. ALL CONCRETE ANCHORS WILL BE POST-INSTALLED MECHANICAL CONCRETE ANCHORS OR CAST-IN-PLACE INSERTS. CONTRACTOR SHALL AVOID ALL REINFORCING WHEN DRILLING HOLES FOR CONCRETE ANCHORS.

COST OF CONCRETE ANCHORS IS INCLUDED IN THE COST OF PIER CONCRETE.

AESTHETIC LIGHTING
RIVER PIER DETAILS
IA PIERS 17-18

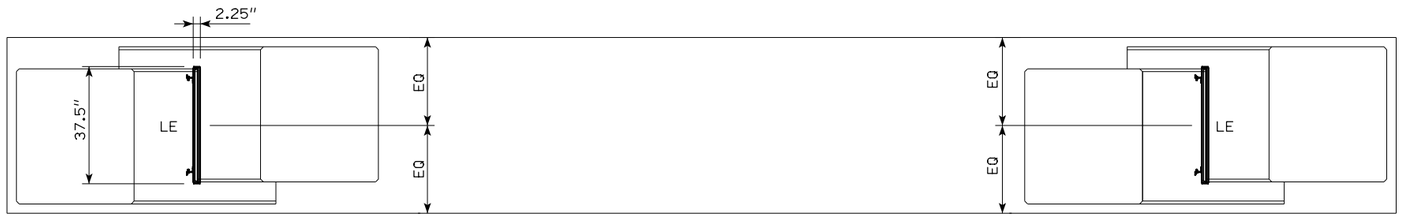

AESTHETIC LIGHTING VIADUCT PIER CAP - SECTION A-A

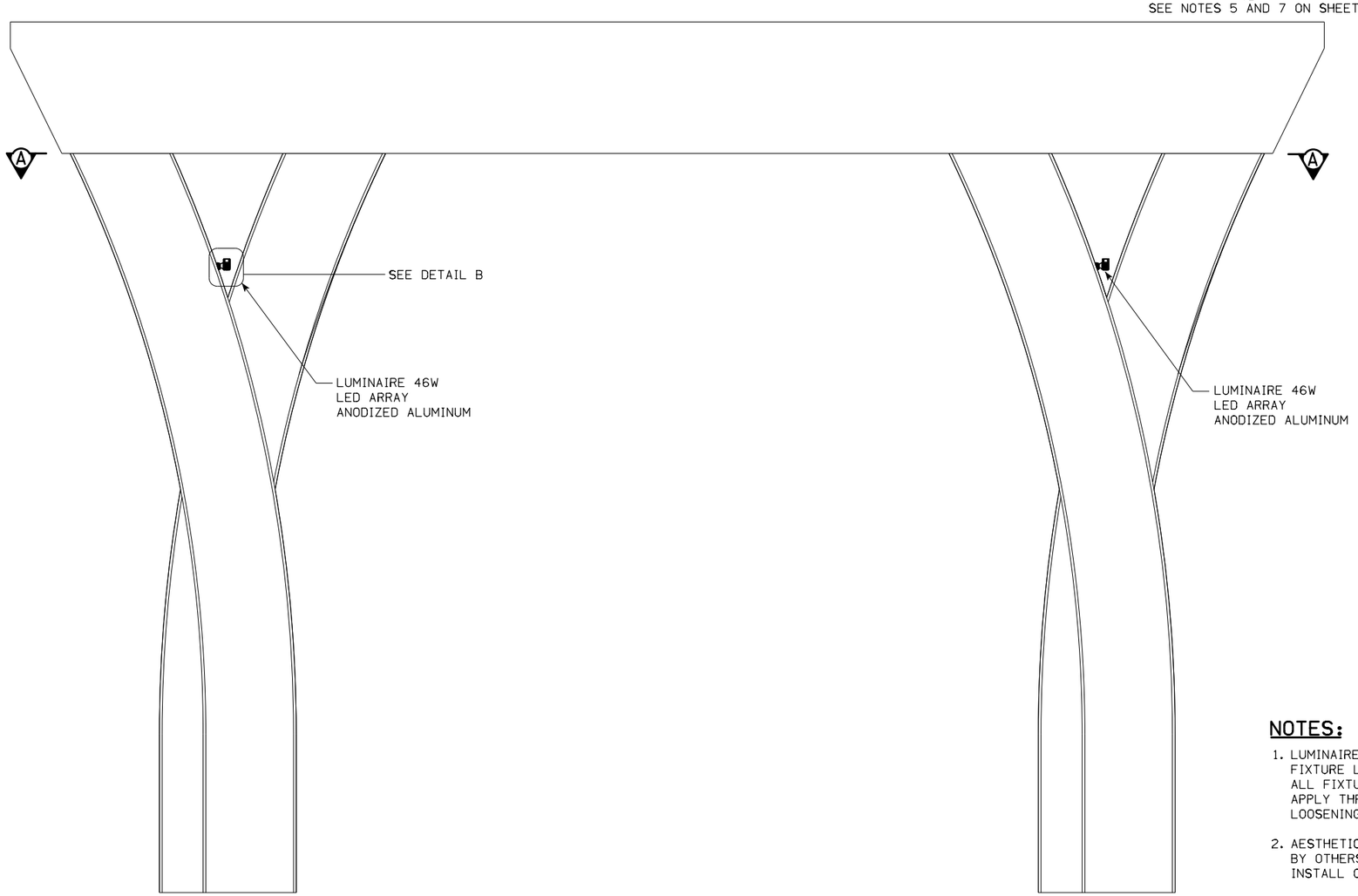

AESTHETIC LIGHTING VIADUCT PIER ELEVATION

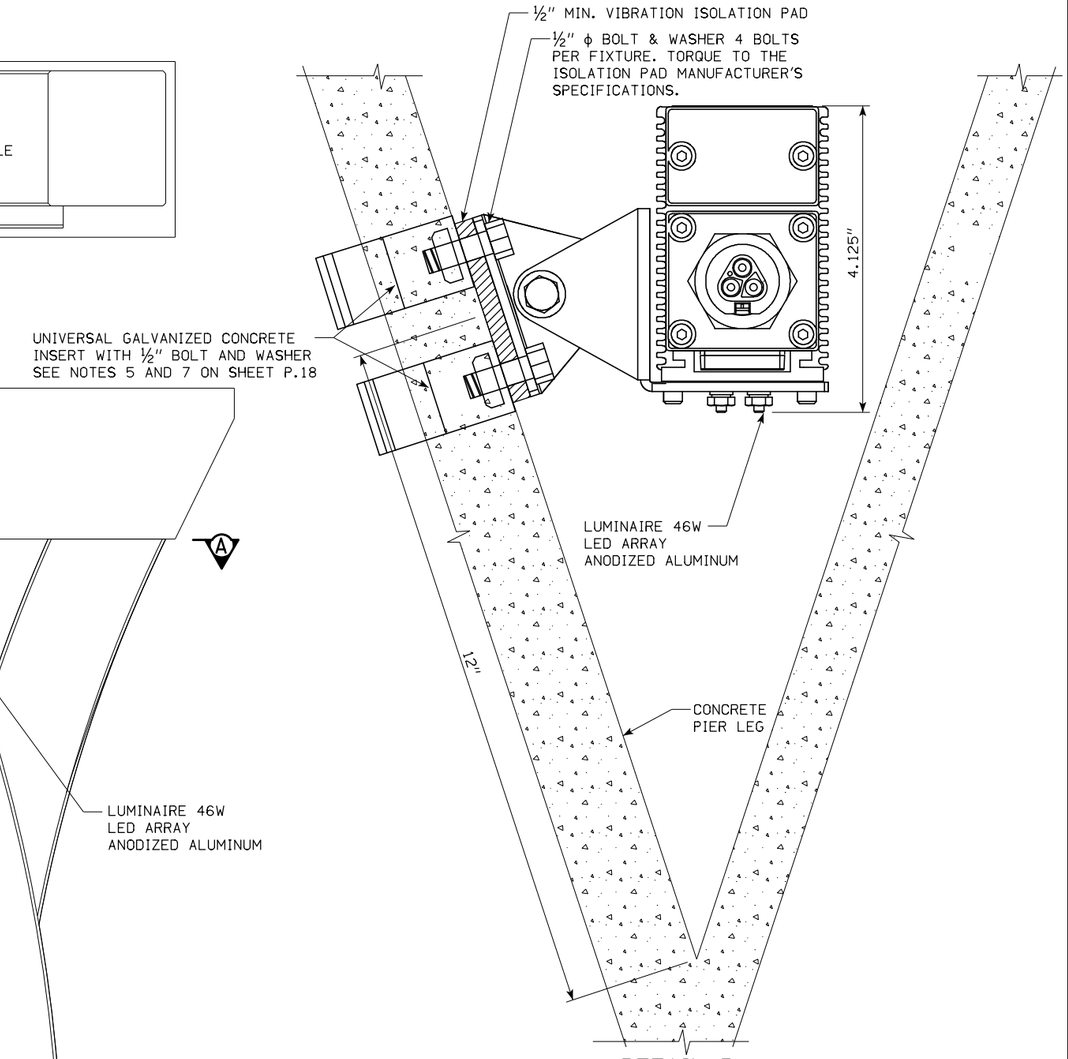

DETAIL B
VIADUCT PIER CAP MOUNTING

NOTES:

1. LUMINAIRE TO BE AIMED AT THE PIER CAP WITH THE FIXTURE LENS ALIGNED WITH NADIR. AFTER AIMING OF ALL FIXTURES HAS BEEN APPROVED BY THE ENGINEER, APPLY THREADLOCKER TO HINGE LOCKS TO PREVENT LOOSENING FROM SHOCK AND VIBRATION.

2. AESTHETIC LUMINAIRE AND ISOLATION PAD SHALL BE SUPPLIED BY OTHERS. SEE SPECIAL PROVISION FOR "AESTHETIC LIGHT, INSTALL ONLY".

AESTHETIC LIGHTING VIADUCT PIER ELEV. PLAN AND DETAILS

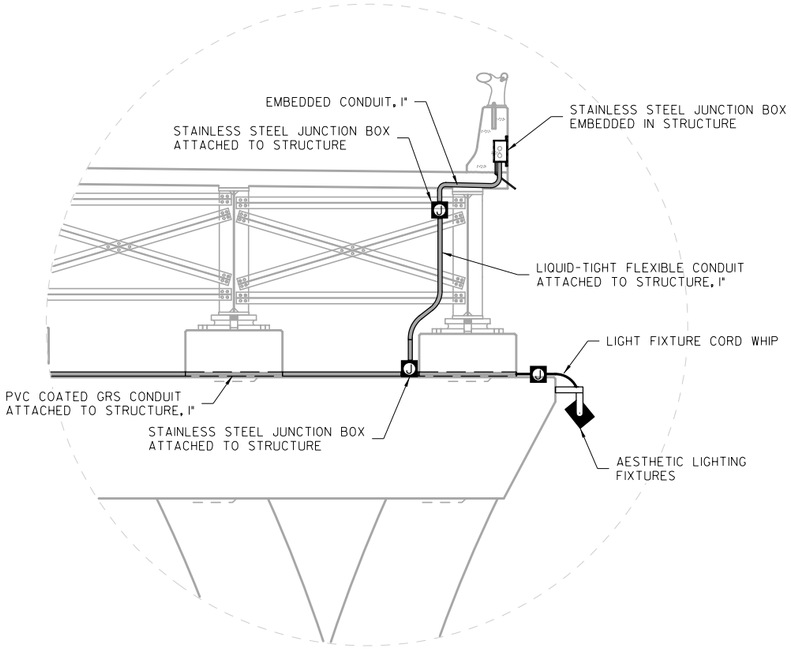

DETAIL A

NO SCALE

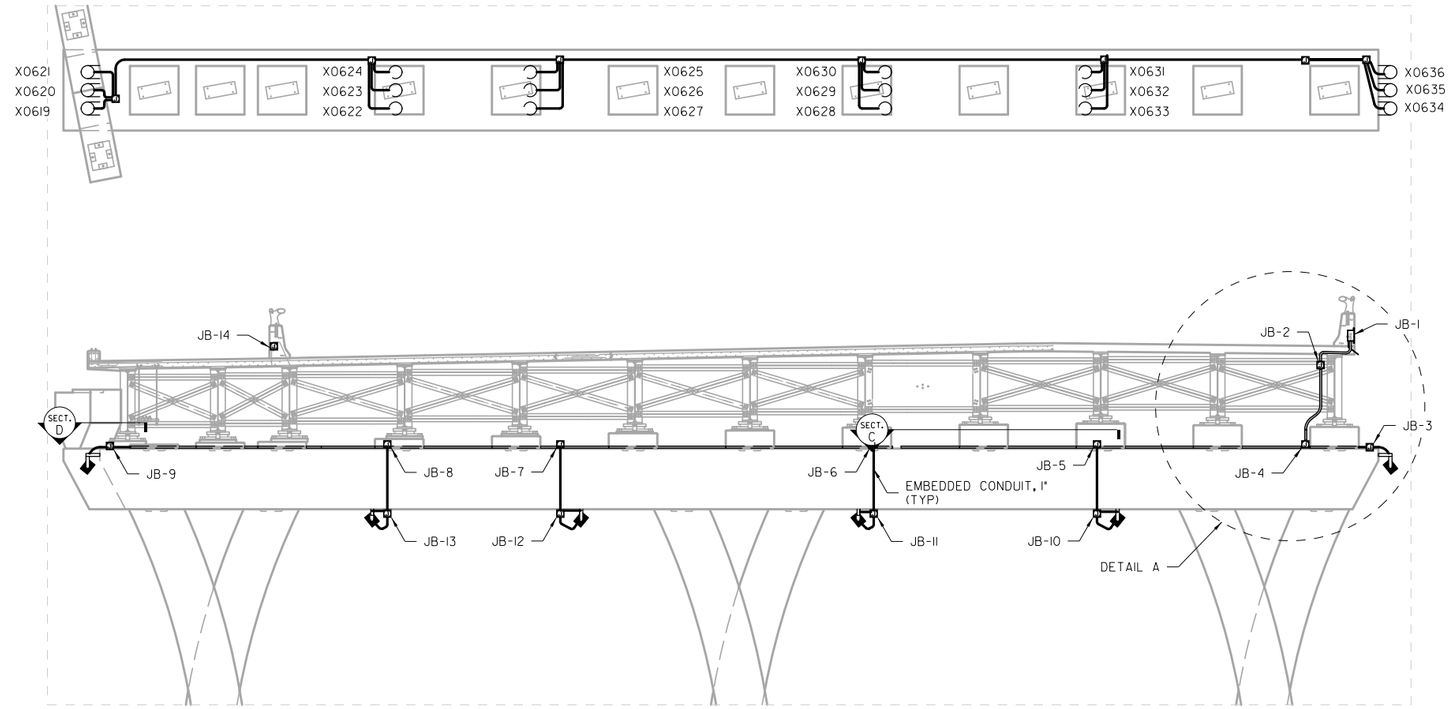

PIER 17 PLAN & ELEVATION DETAIL FOR CONDUIT ROUTING

NO SCALE - LOOKING NORTH

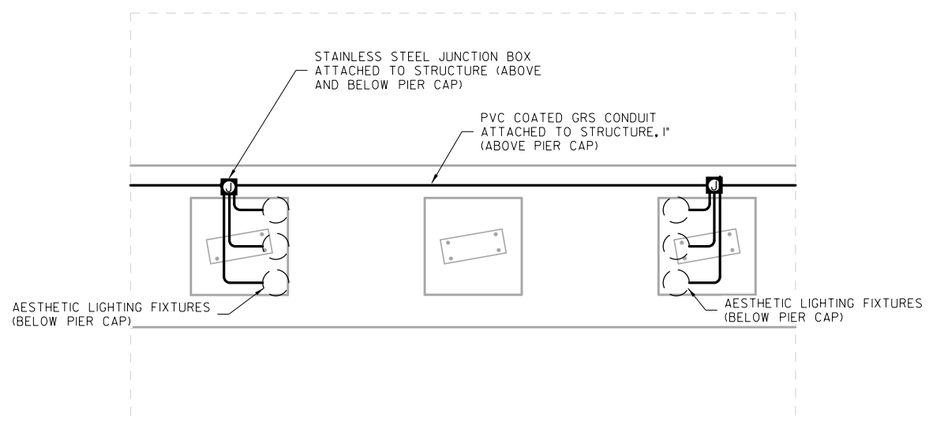

SECTION C

NO SCALE

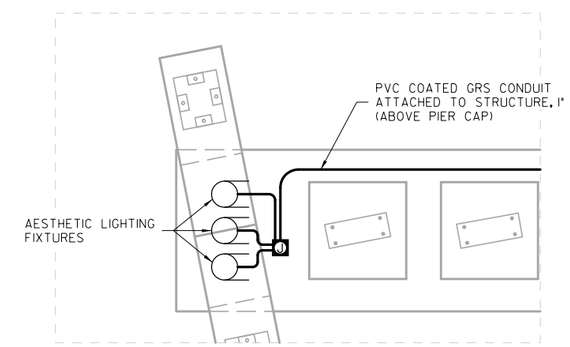

SECTION D

NO SCALE

LIGHTING DETAILS

ENGLISH	IOWA DOT	DESIGN TEAM **BENESCH**	**SCOTT** COUNTY	PROJECT NUMBER **BRFIM-074-1(200)5--05-82**	SHEET NUMBER **P.20**

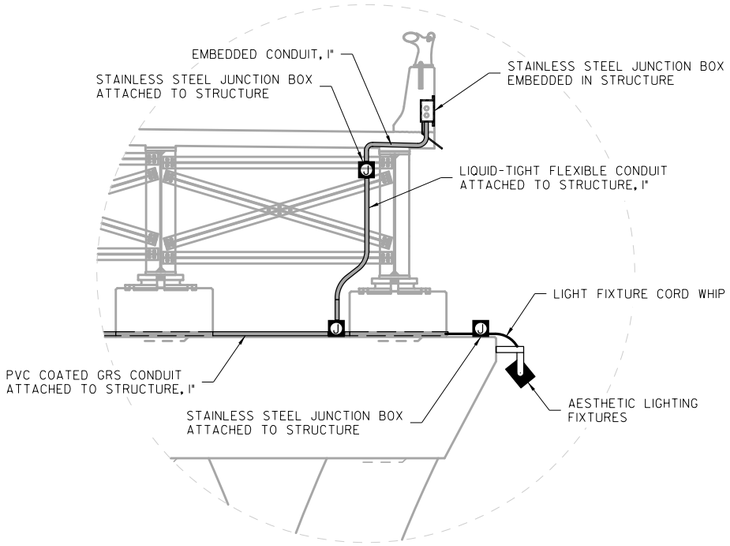

DETAIL A

NO SCALE

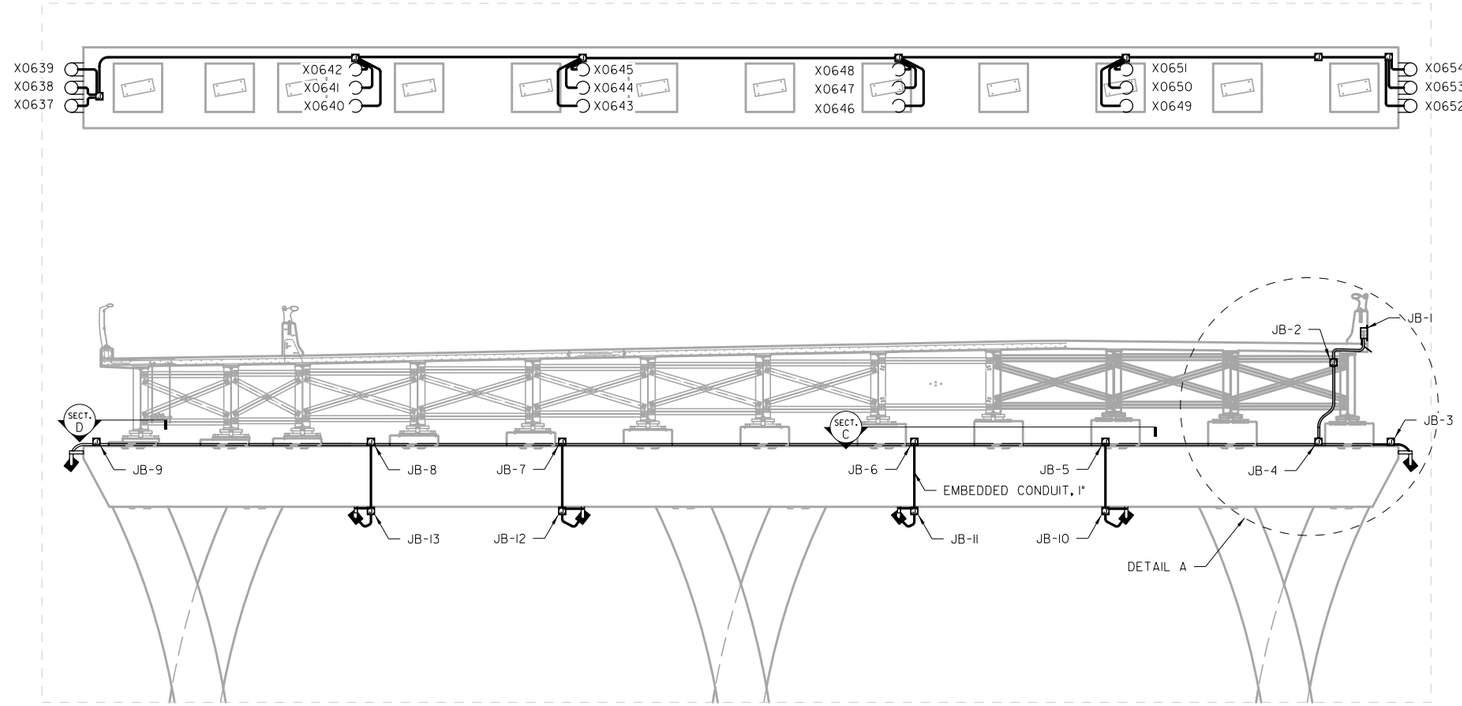

PIER 18 PLAN & ELEVATION DETAIL FOR AESTHETIC LIGHTING CONDUIT ROUTING

NO SCALE - LOOKING NORTH

NOTE:

FOR ARCH POWER CONDUIT ROUTING AT PIER 18 SEE SHEET P.22.

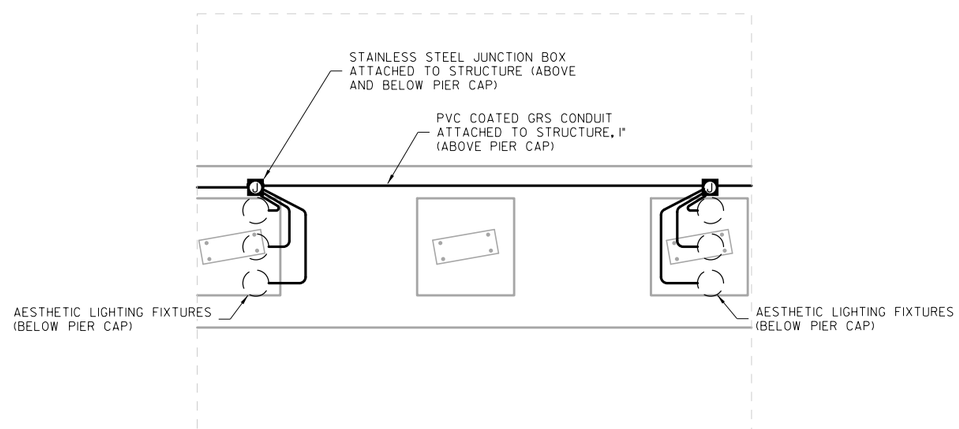

SECTION C

NO SCALE

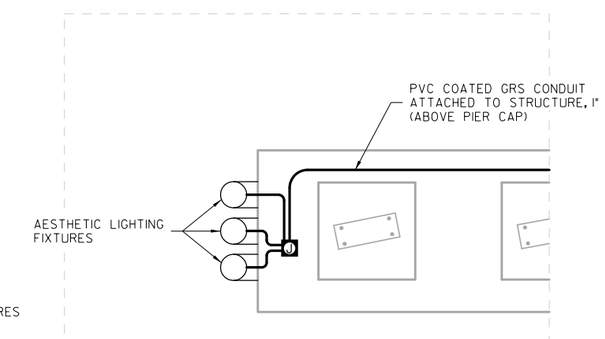

SECTION D

NO SCALE

LIGHTING DETAILS

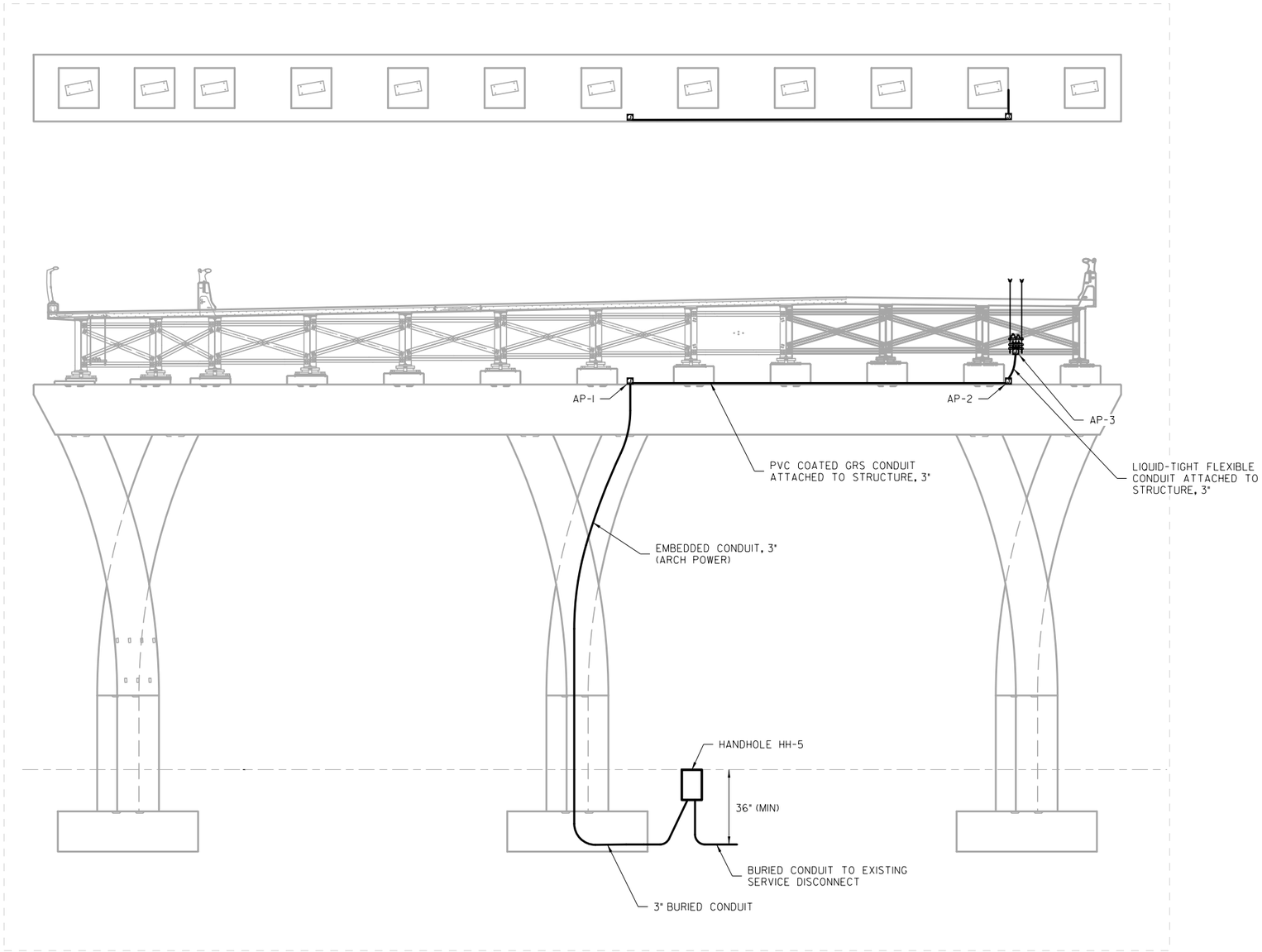

PIER 18 PLAN & ELEVATION DETAIL FOR ARCH BRIDGE POWER CONDUIT ROUTING

NO SCALE - LOOKING NORTH

LIGHTING DETAILS

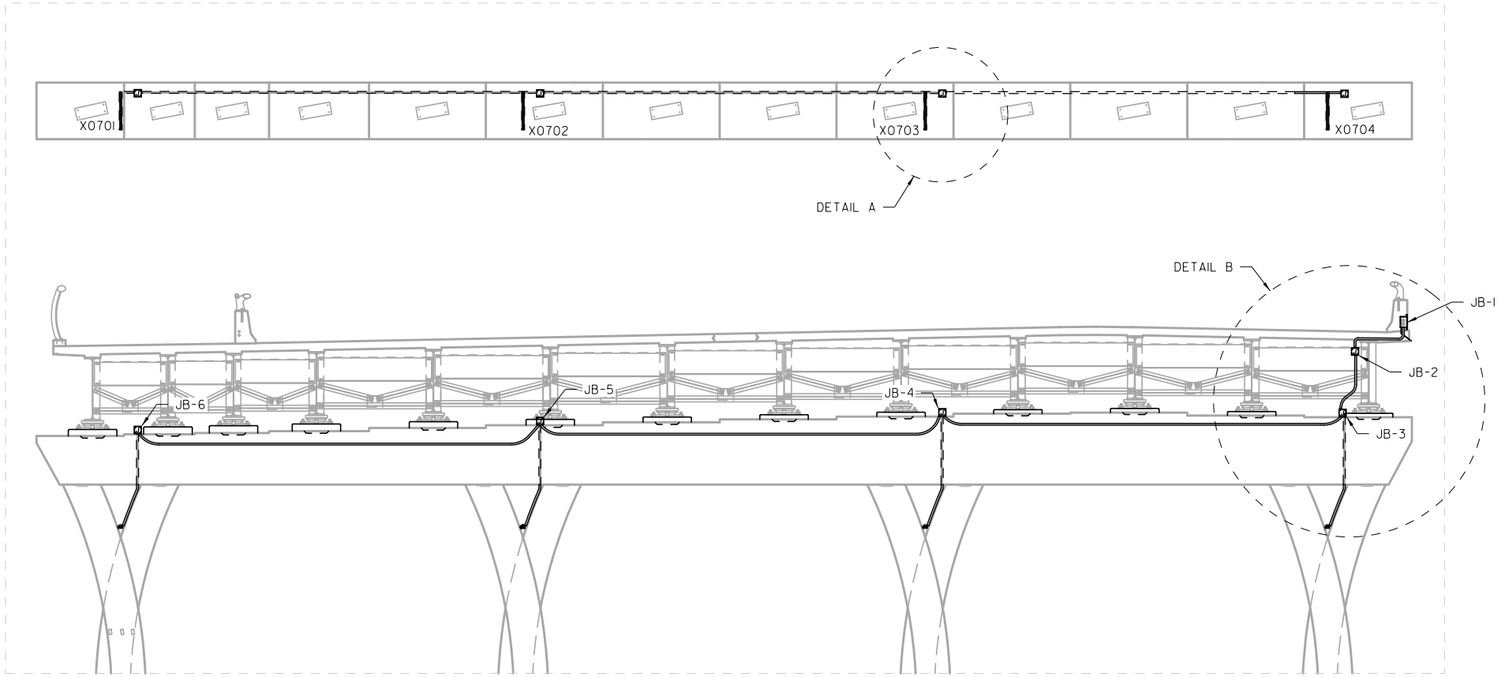

PIER 19 PLAN & ELEVATION DETAIL FOR AESTHETIC LIGHTING CONDUIT ROUTING

NO SCALE - LOOKING NORTH

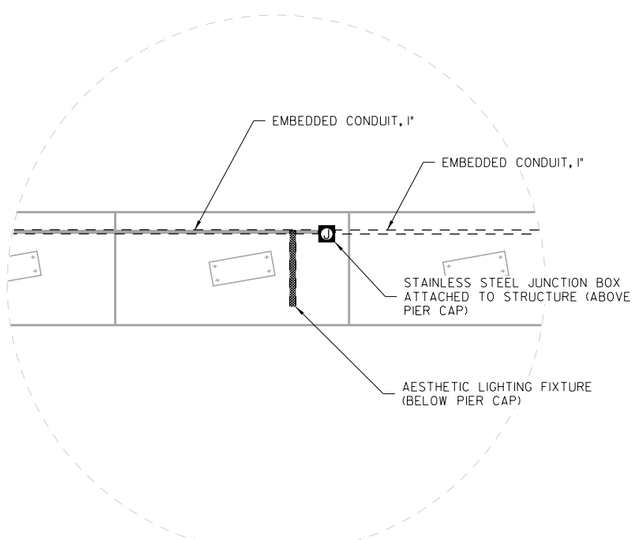

DETAIL A

NO SCALE

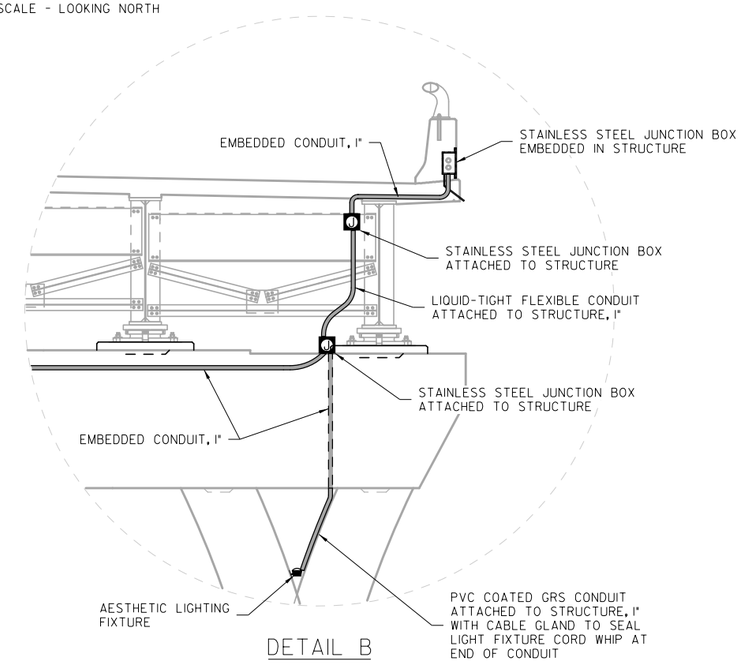

DETAIL B

NO SCALE

LIGHTING DETAILS

ENGLISH	IOWA DOT	DESIGN TEAM **BENESCH**	**SCOTT** COUNTY	PROJECT NUMBER **BRFIM-074-1(200)5--05-82**	SHEET NUMBER **P.23**

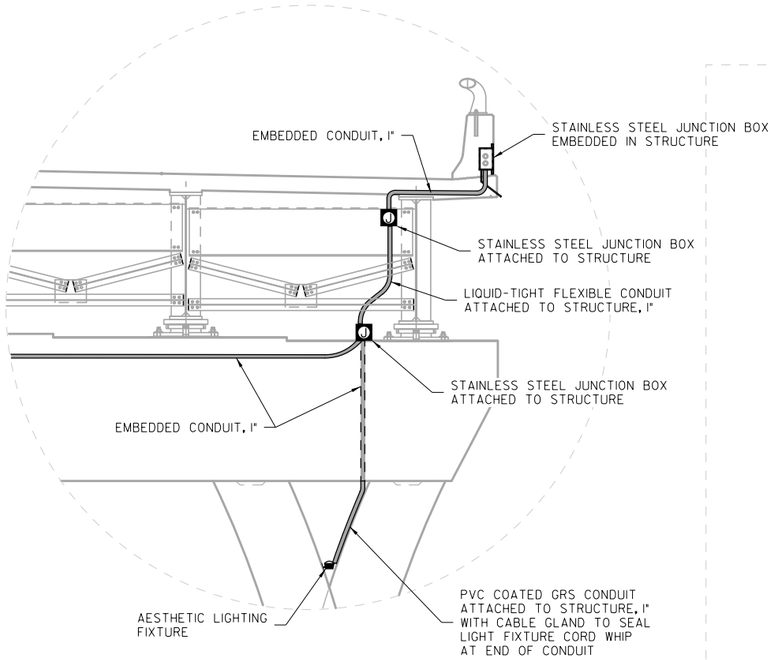

DETAIL A

NO SCALE

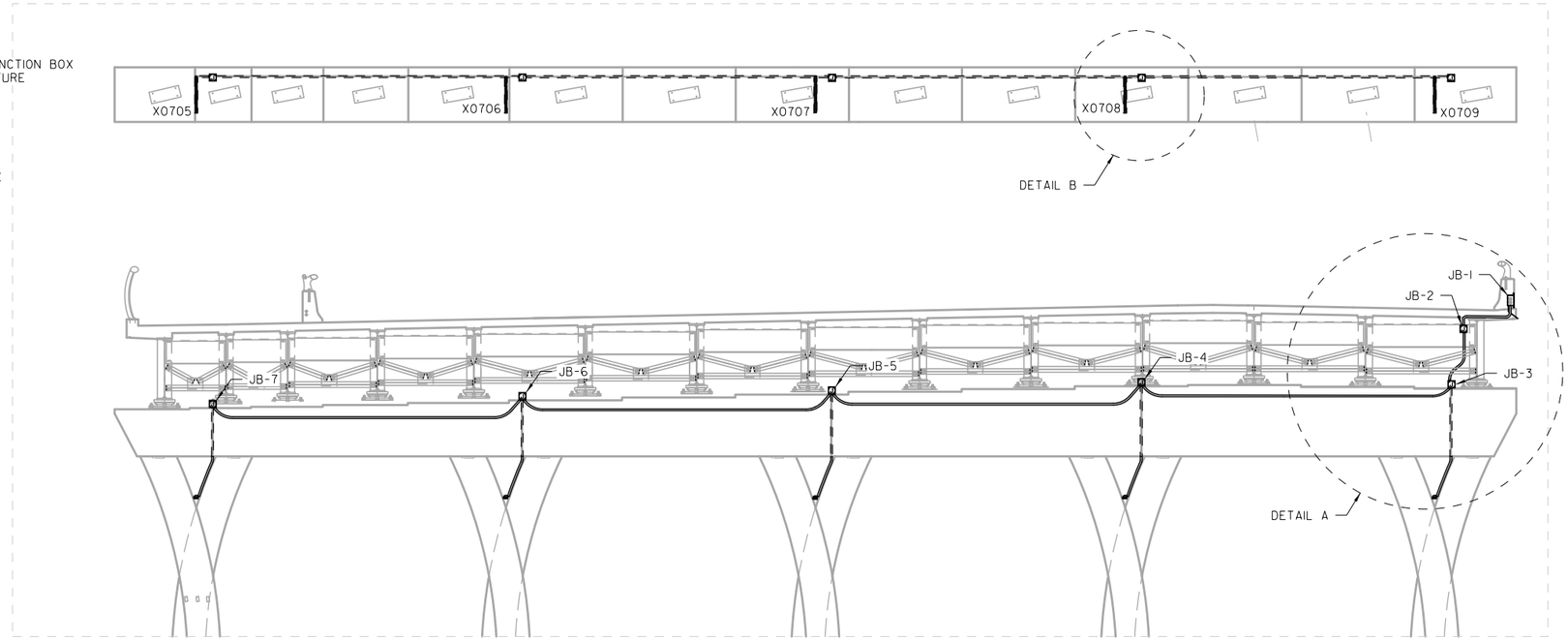

PIER 20 PLAN & ELEVATION DETAIL FOR AESTHETIC LIGHTING CONDUIT ROUTING

NO SCALE - LOOKING NORTH

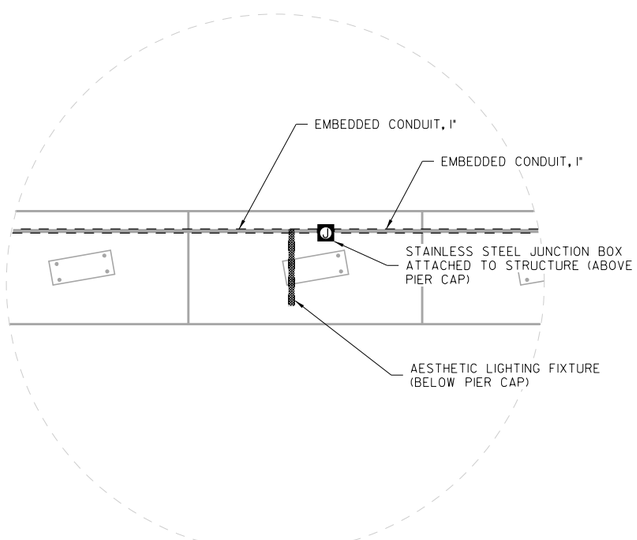

DETAIL B

NO SCALE

LIGHTING DETAILS

ENGLISH	IOWA DOT	DESIGN TEAM **BENESCH**	**SCOTT** COUNTY	PROJECT NUMBER **BRFIM-074-1(200)5--05-82**	SHEET NUMBER **P.24**

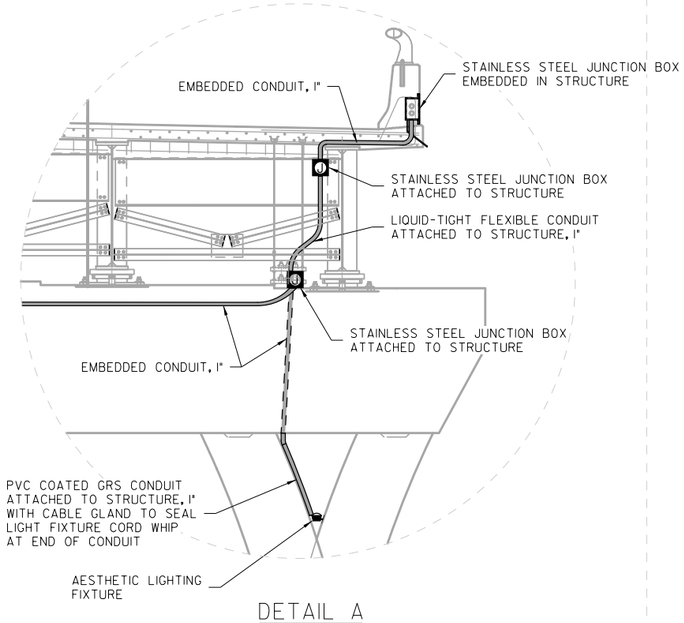

DETAIL A

NO SCALE

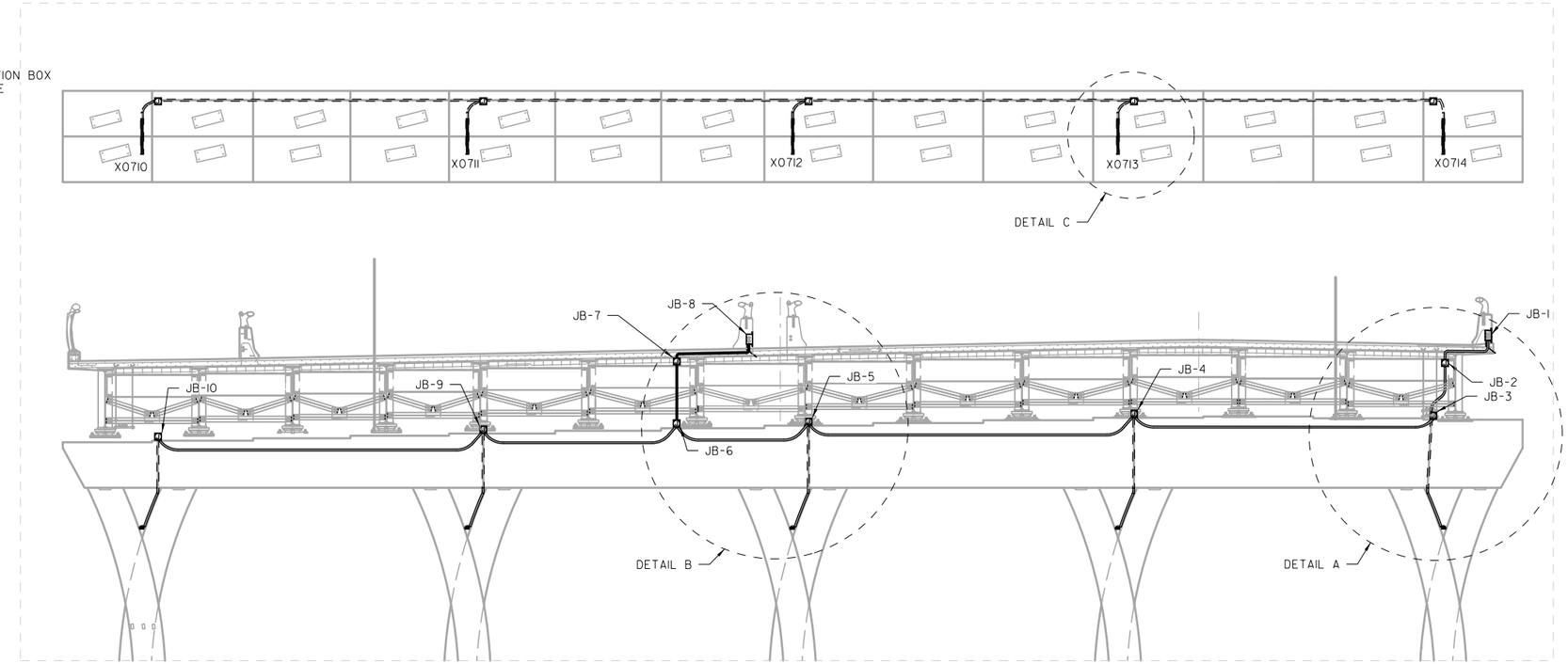

PIER 21 PLAN & ELEVATION DETAIL FOR AESTHETIC LIGHTING CONDUIT ROUTING

NO SCALE - LOOKING NORTH

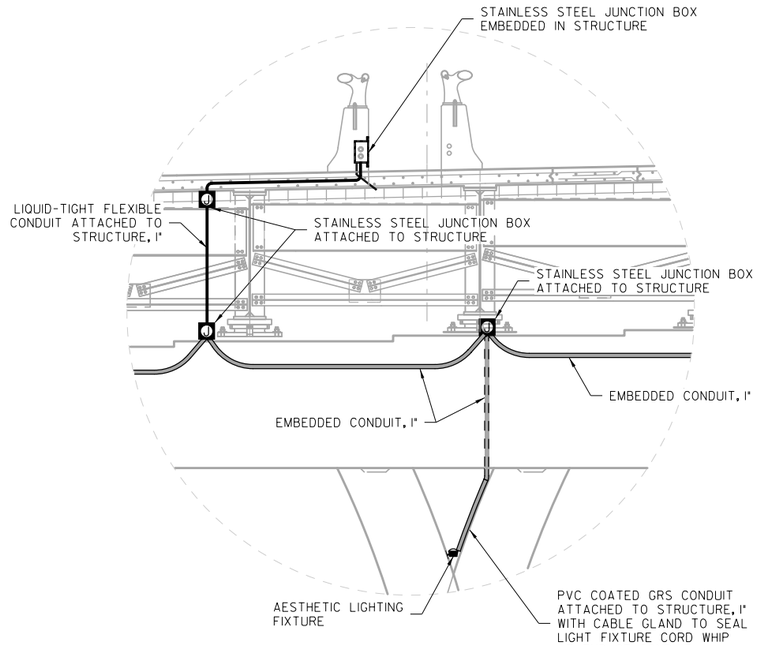

DETAIL B

NO SCALE

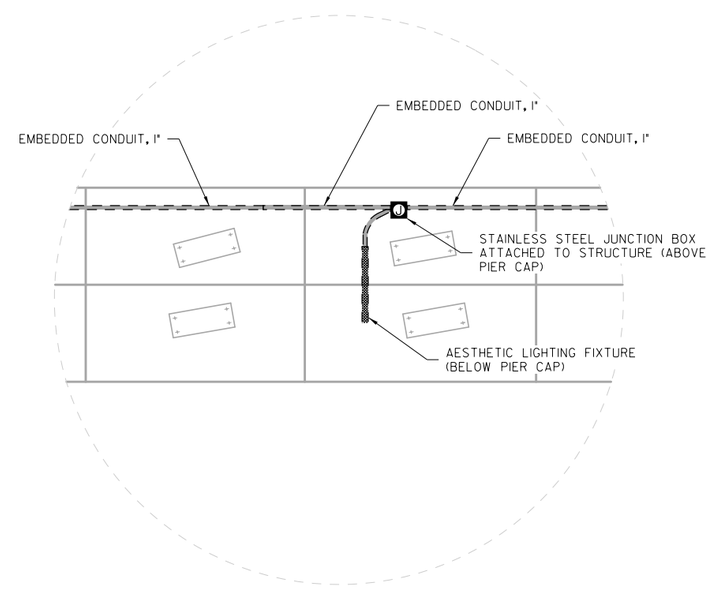

DETAIL C

NO SCALE

LIGHTING DETAILS

ENGLISH	IOWA DOT	DESIGN TEAM **BENESCH**	**SCOTT** COUNTY	PROJECT NUMBER **BRFIM-074-1(200)5--05-82**	SHEET NUMBER **P.25**

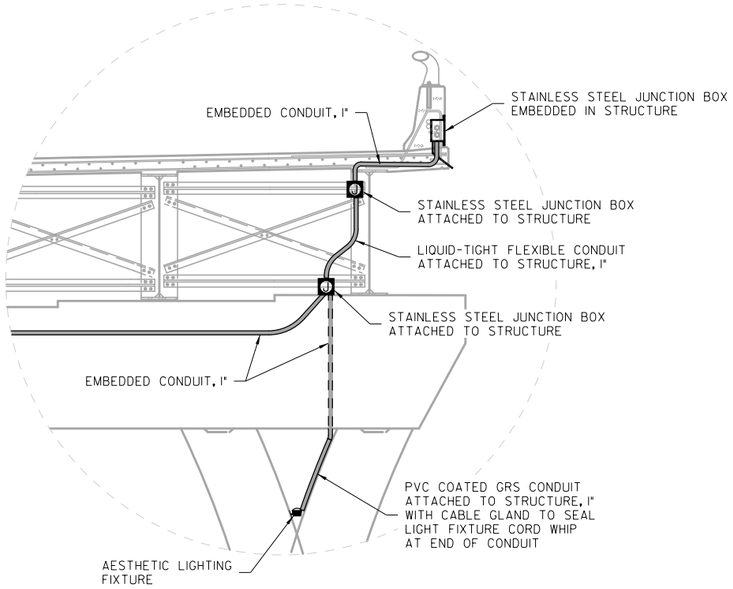

DETAIL A

NO SCALE

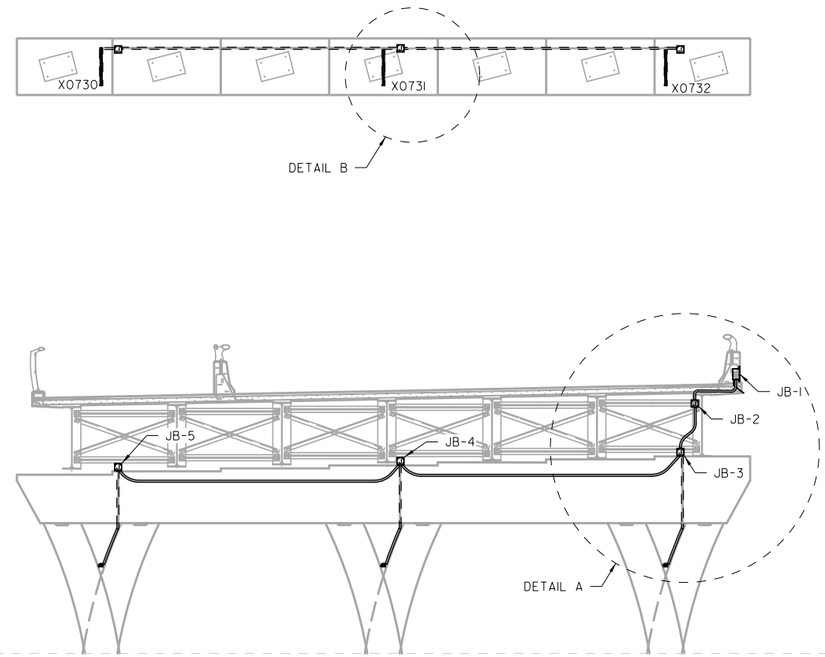

PIER 22C PLAN & ELEVATION DETAIL FOR AESTHETIC LIGHTING CONDUIT ROUTING

NO SCALE - LOOKING NORTH

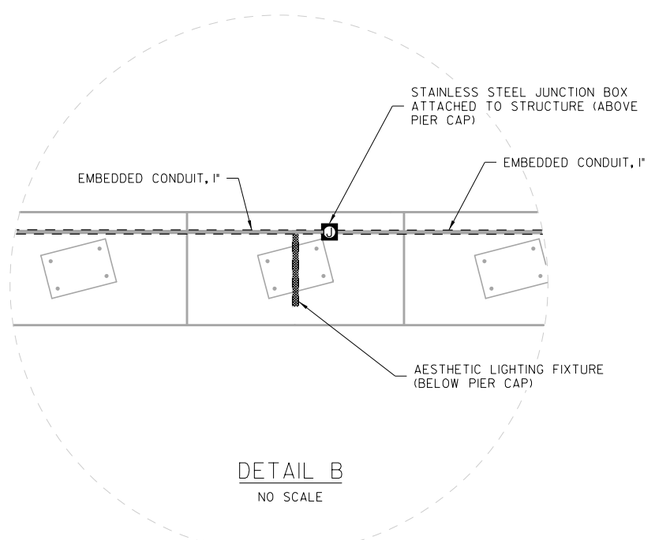

DETAIL B

NO SCALE

LIGHTING DETAILS

ENGLISH	IOWA DOT	DESIGN TEAM **BENESCH**	**SCOTT** COUNTY	PROJECT NUMBER **BRFIM-074-1(200)5--05-82**	SHEET NUMBER **P.26**

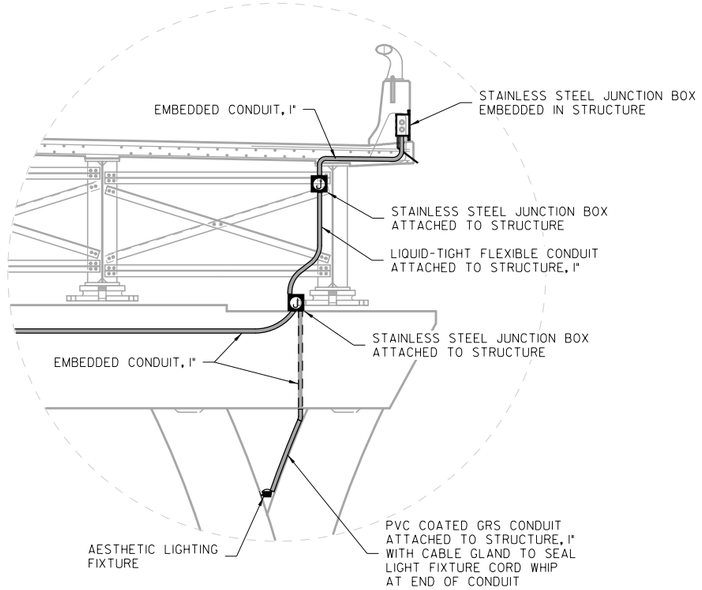

DETAIL A

NO SCALE

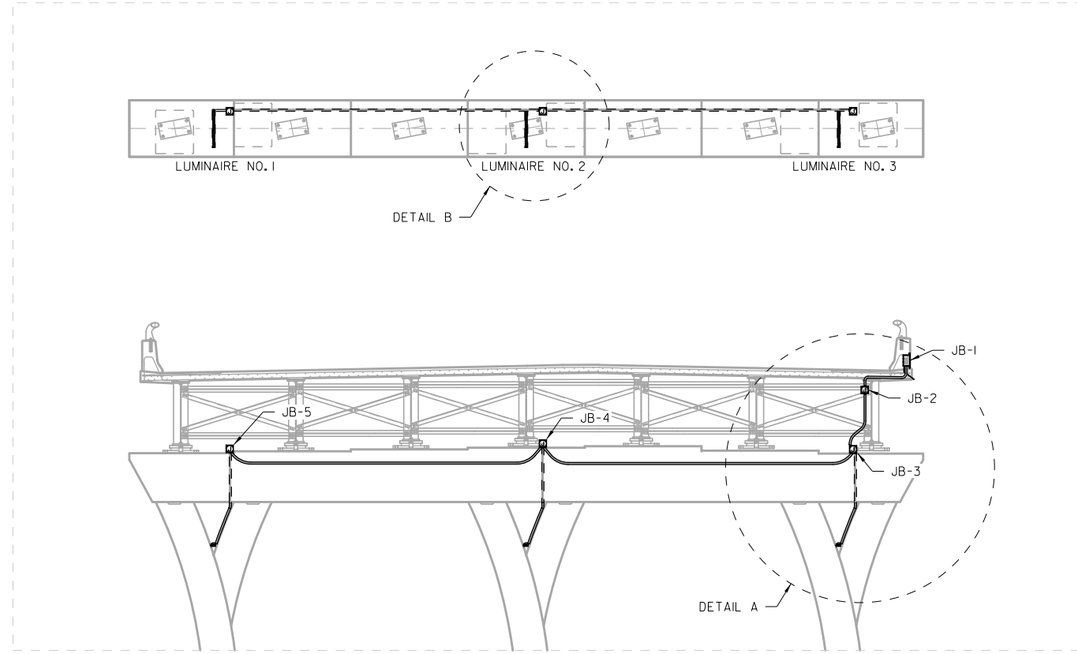

PIERS 22-31 PLAN & ELEVATION DETAIL FOR AESTHETIC LIGHTING CONDUIT ROUTING

NO SCALE - LOOKING NORTH

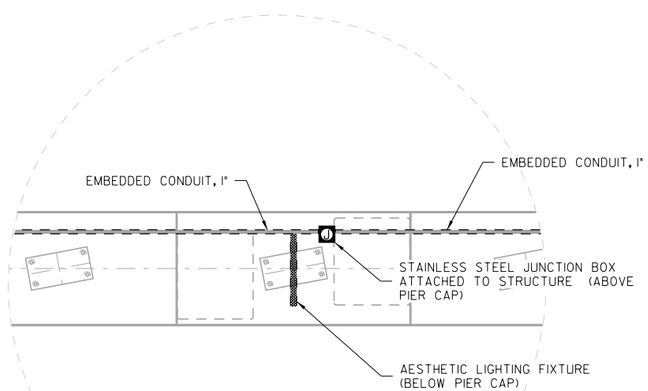

DETAIL B

NO SCALE

LIGHTING DETAILS

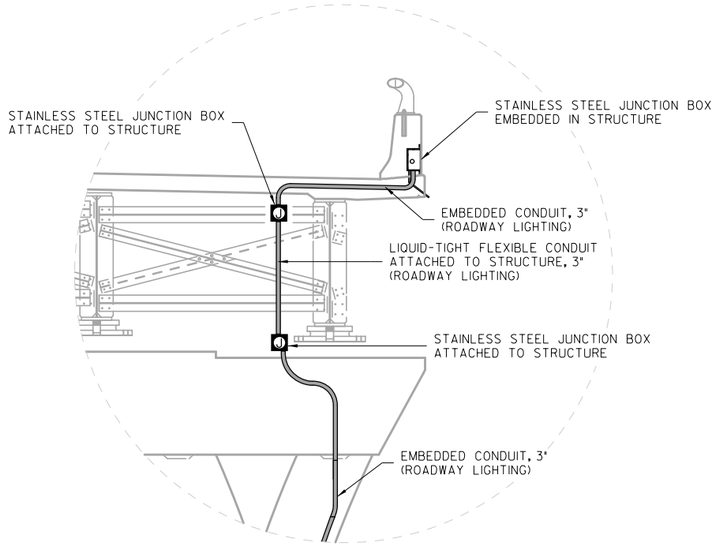

DETAIL A

NO SCALE

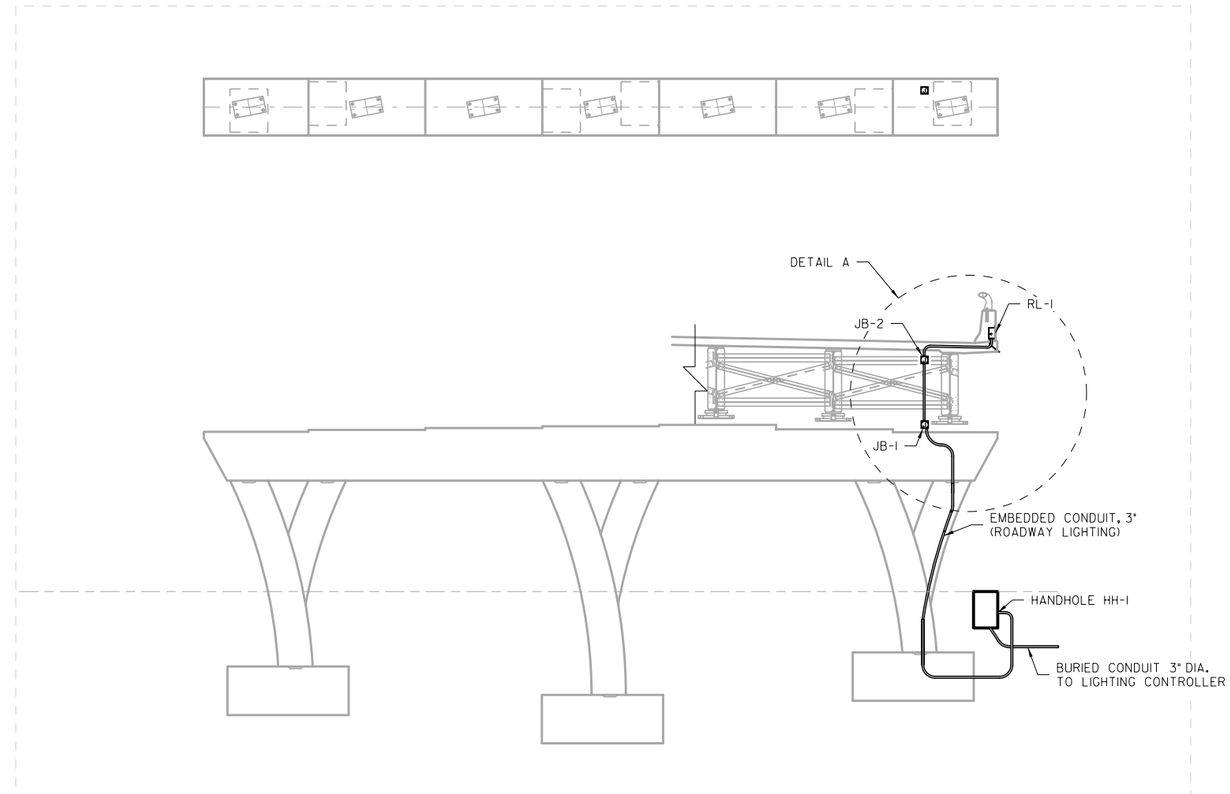

PIER 27 PLAN & ELEVATION DETAIL FOR ROADWAY LIGHTING CONDUIT ROUTING

NO SCALE - LOOKING NORTH

LIGHTING DETAILS

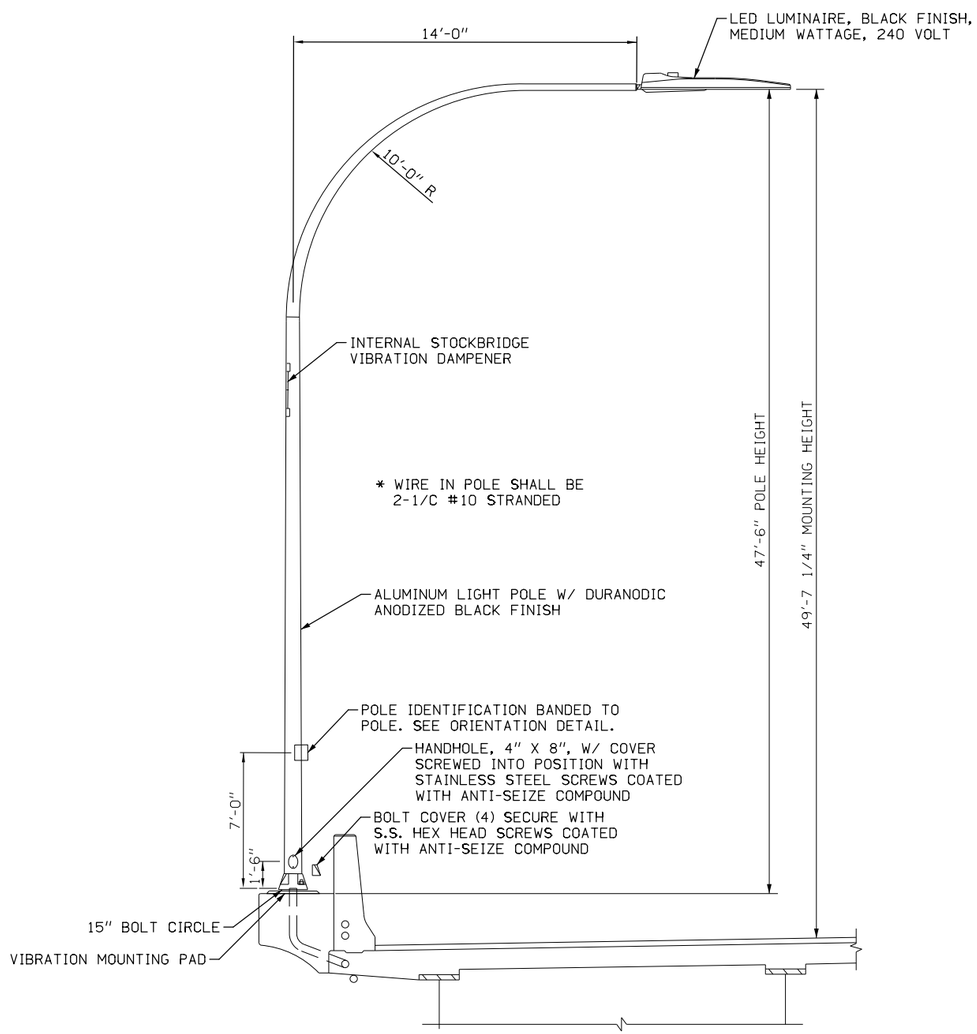

TYPE I
DAVIT POLE AT BRIDGE

NO SCALE

NOTE:

1. DETAIL SHOWN FOR GENERAL MOUNTING ONLY. ALL MATERIALS SHOWN, EXCEPT POLE WIRE AND POLE IDENTIFICATION, SHALL BE PROVIDED AS PART OF THE POLE AND LUMINAIRE SUPPLY CONTRACTS.

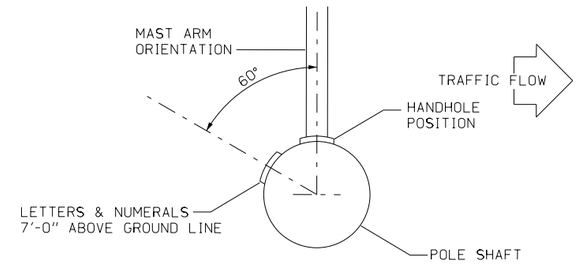

POSITION OF HANDHOLE AND POLE NUMBER FOR SINGLE MAST ARM POLES MOUNTED ON BRIDGE PARAPET OR BARRIER WALL

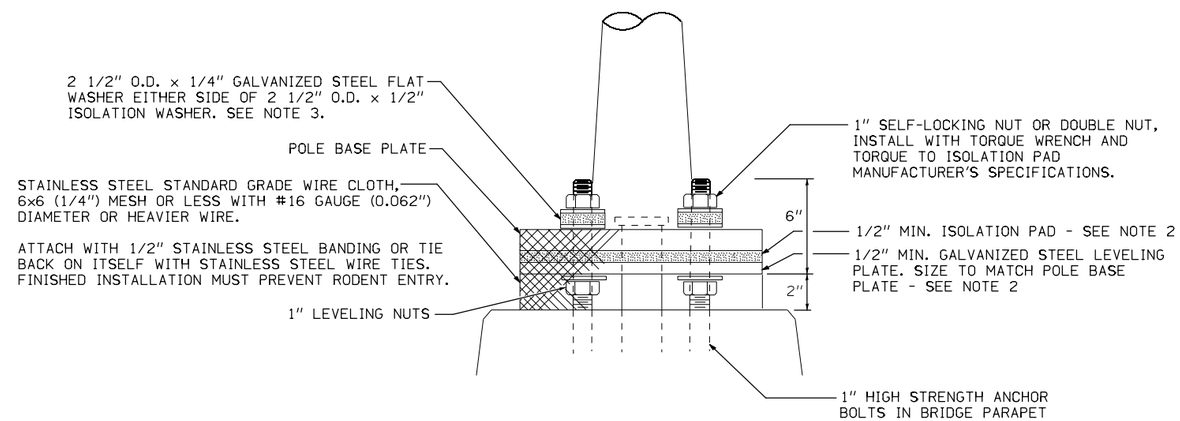

POLE MOUNTED ON BRIDGE PARAPET DETAIL

GENERAL NOTES

1. THE VIBRATION ISOLATION PAD AND LEVELING PLATE SHALL MATCH THE FOOTPRINT OF THE POLE BASE PLATE.
2. THE VIBRATION ISOLATION PAD, WASHERS, AND LEVELING PLATE SHALL BE PROVIDED AS PART OF THE SUPPLY CONTRACT.
3. THE DIAMETER OF THE FLAT WASHER ON EITHER SIDE OF THE ISOLATION WASHER SHALL BE AT LEAST THE SAME AS THE DIAMETER OF THE ISOLATION WASHER.

LIGHTING DETAILS

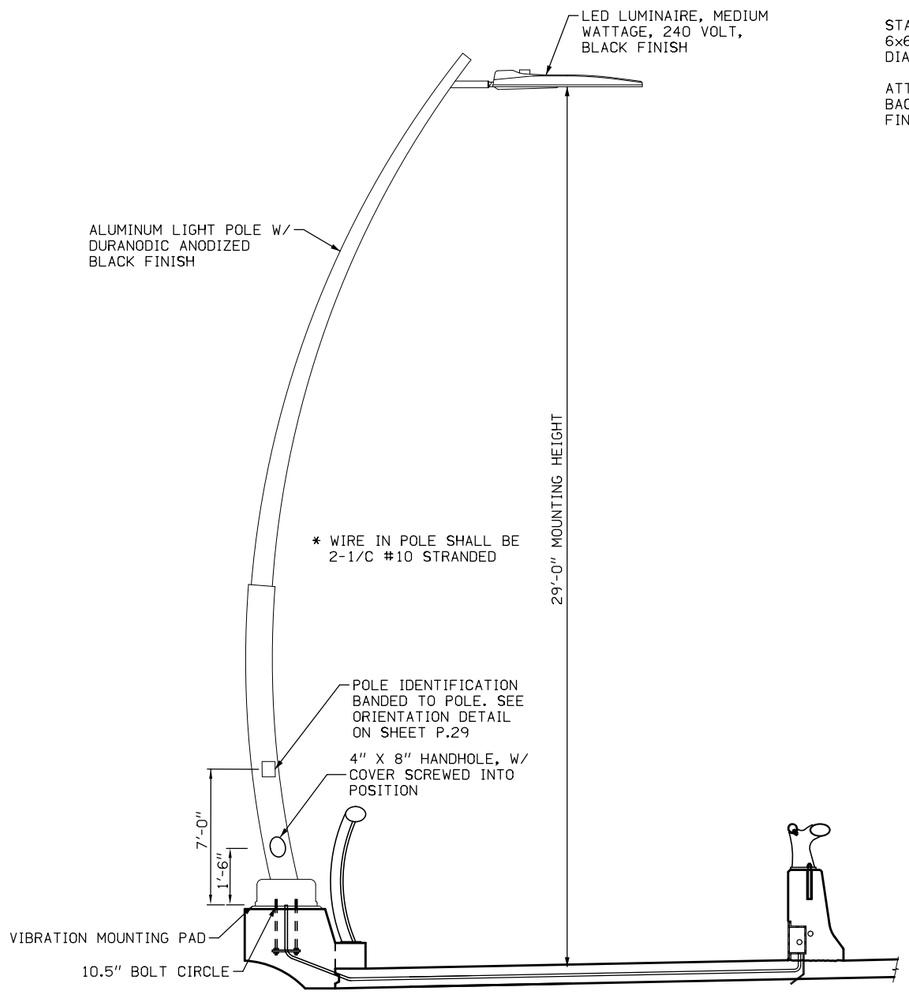

TYPE II

DAVIT POLE FOR RAMP LIGHTING ALONG BIKE PATH

NO SCALE

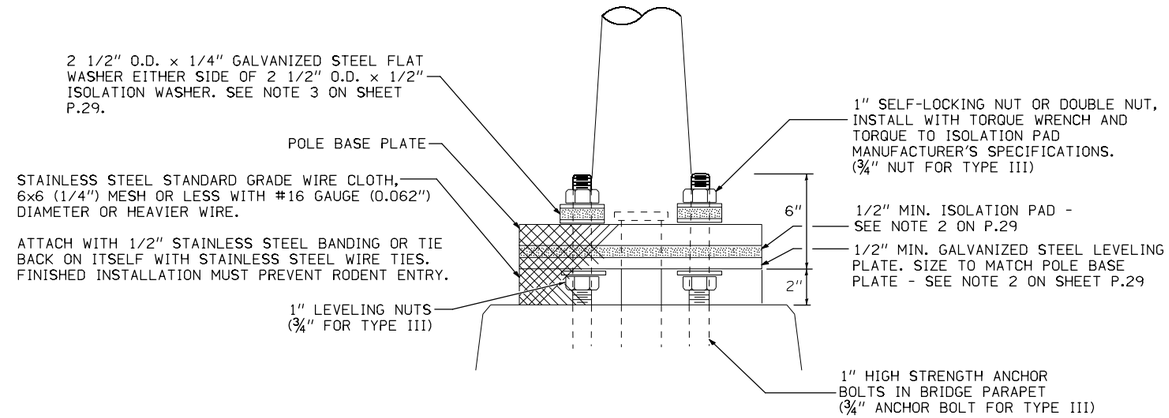

POLE MOUNTED ON BRIDGE PARAPET DETAIL

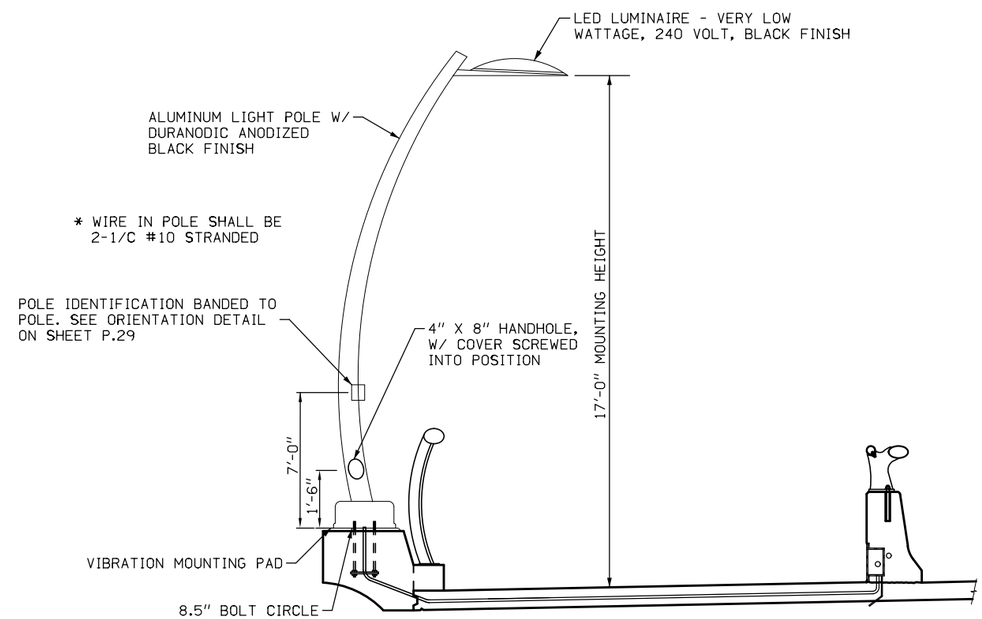

TYPE III

DAVIT POLE FOR BIKE PATH LIGHTING

NO SCALE

NOTE:

1. DETAIL SHOWN FOR GENERAL MOUNTING ONLY. ALL MATERIALS SHOWN, EXCEPT POLE WIRE AND POLE IDENTIFICATION, SHALL BE PROVIDED AS PART OF THE POLE AND LUMINAIRE SUPPLY CONTRACTS.

LIGHTING DETAILS

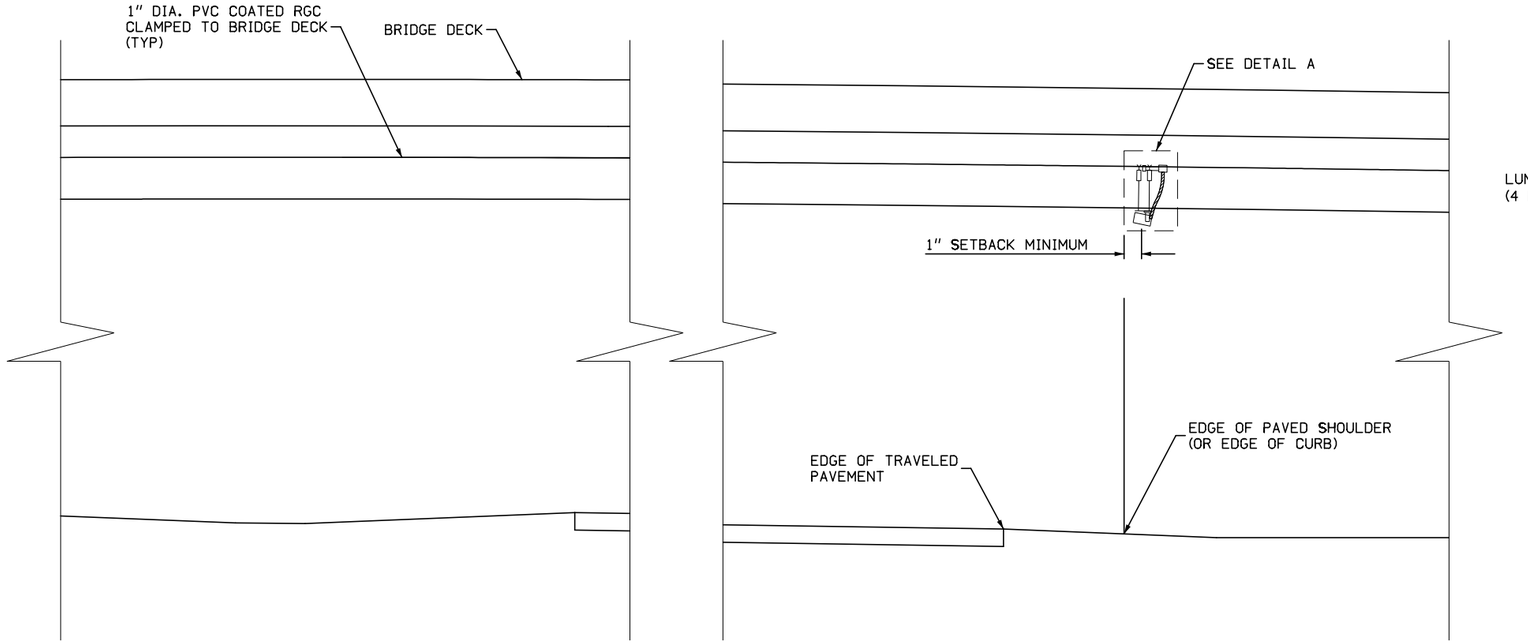

ELEVATION - LOOKING EAST

NOT TO SCALE

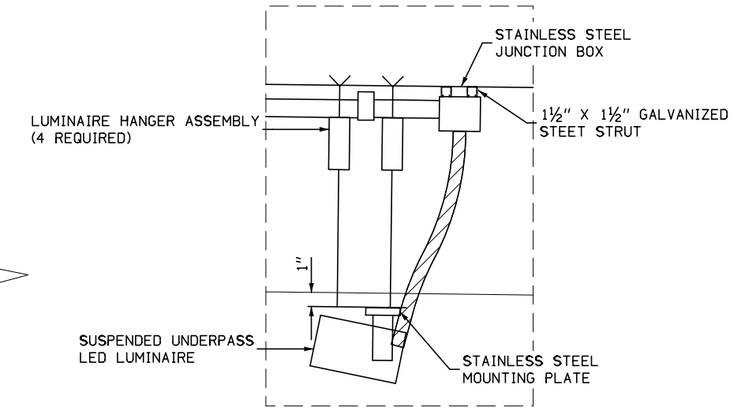

DETAIL A

NOTES:

1. LIQUID TIGHT FLEXIBLE NONMETALLIC CONDUIT, MAXIMUM LENGTH 6'-0", TYPICAL FOR EACH INSTANCE AS SHOWN. PROVIDE PVC COATED RIGID GALVANIZED STEEL CONDUIT AS REQUIRED NOT TO EXCEED 6'-0" OF FLEXIBLE LIQUID TIGHT NONMETALLIC CONDUIT. LIQUID TIGHT FLEXIBLE NONMETALLIC CONDUIT AND CABLING WILL BE INCLUDED IN THE COST OF THE UNDERPASS LUMINAIRE IT CONNECTS TO.
2. CABLING SHALL BE 2-1/C NO. 10 WITH 1/C NO. 10 GROUND IF ADJACENT LUMINAIRE IS FINAL LUMINAIRE IN SERIES. SEE PLANS FOR CABLING REQUIREMENTS.
3. FOR CONCRETE INSERTS AND ANCHORS, SEE ELECTRICAL PLAN NOTE 15.
4. THE HANGER ASSEMBLY COMPLETE WITH ANCHORS/INSERTS AND ALL APPLICABLE HARDWARE SHALL BE INCLUDED IN THE COST OF THE "UNDERDECK LIGHTING, INSTALL ONLY."
5. ALL ITEMS MOUNTED TO CONCRETE BRIDGE DECK SHALL BE OFFSET FROM THE STRUCTURE USING GALVANIZED STEEL C-CHANNEL MOUNTING.

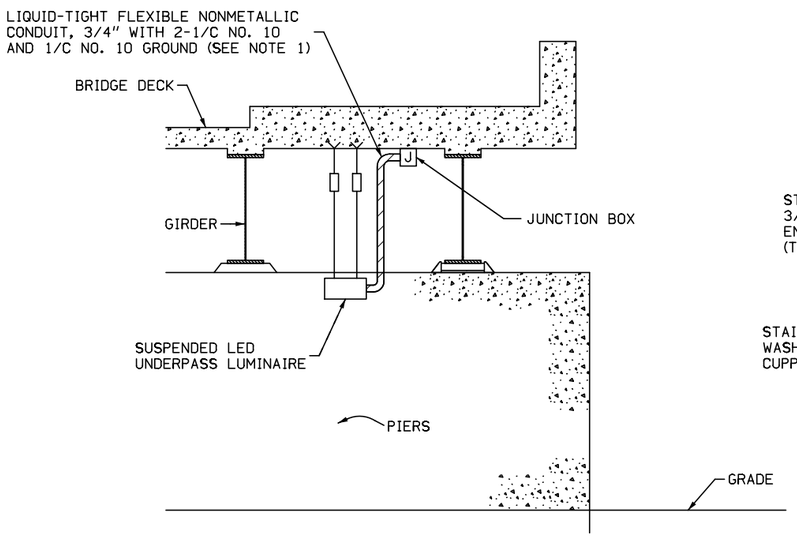

ELEVATION - LOOKING NORTH

NOT TO SCALE

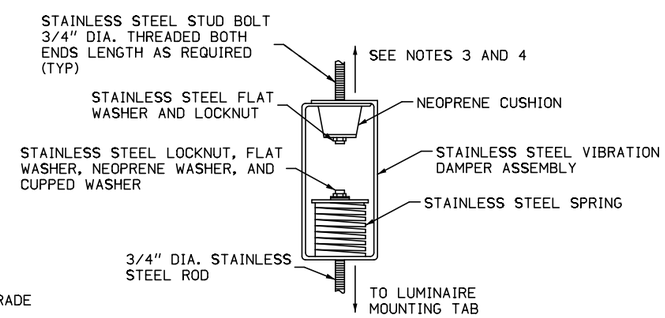

LUMINAIRE HANGER ASSEMBLY DETAIL

NOT TO SCALE

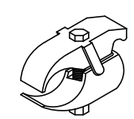

PVC COATED CONDUIT BEAM CLAMP

NOT TO SCALE

LIGHTING DETAILS

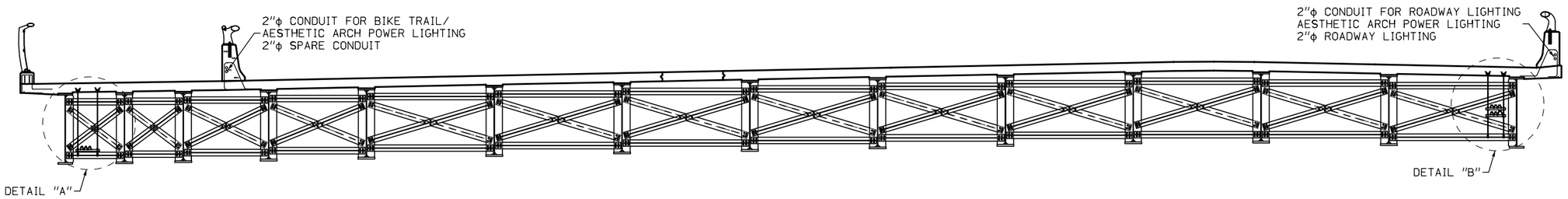

TYPICAL INTERMEDIATE CROSS FRAME SECTION

NOTE:
1. FOR DETAILS A AND B, SEE SHEET P.33

LIGHTING DETAILS

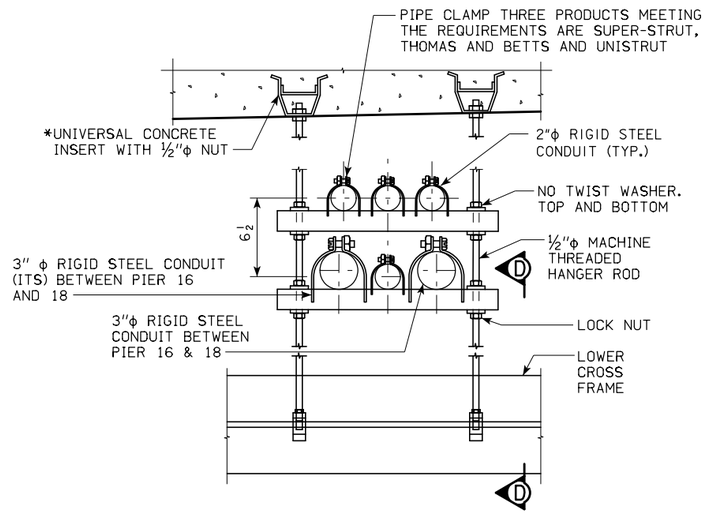

DETAIL "B"

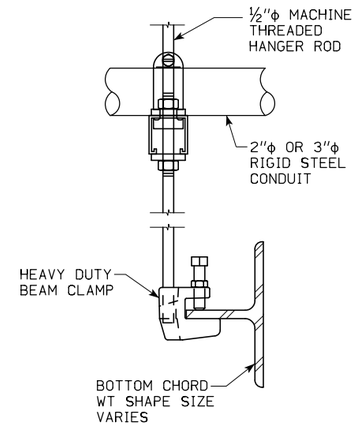

SECTION D-D

NOTES:

1. THREE ITS COMMUNICATION CONDUITS RUN FROM PIER 16 TO 26, TWO ITS POWER CONDUITS RUN FROM PIER 16 TO 18, AND ONE ITS POWER CONDUIT RUNS FROM PIER 18 TO 22.

2. INTERNALLY THREADED CONCRETE INSERTS SHALL BE GALVANIZED STEEL OR GALVANIZED MALLEABLE IRON AND SHALL CONFORM TO I.M. 453.09. CONCRETE INSERTS FOR HANGERS THAT SUPPORT CONDUIT, PIPING, AND JUNCTION BOXES SHALL BE CAST-IN-PLACE WITH A MINIMUM ALLOWABLE TENSION LOAD OF 500 LBS.

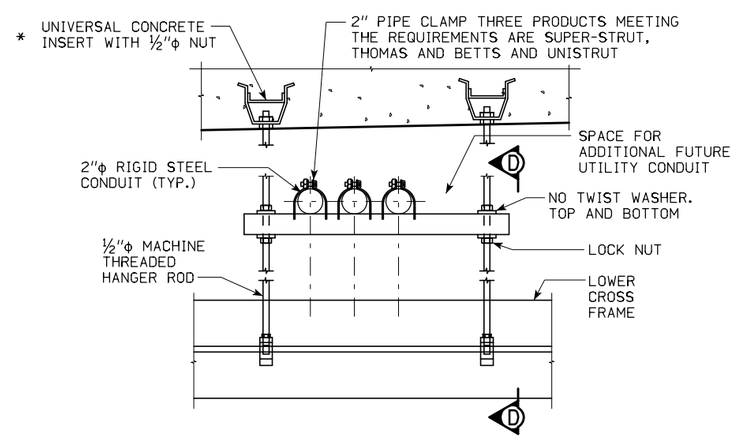

DETAIL "A"

LIGHTING DETAILS

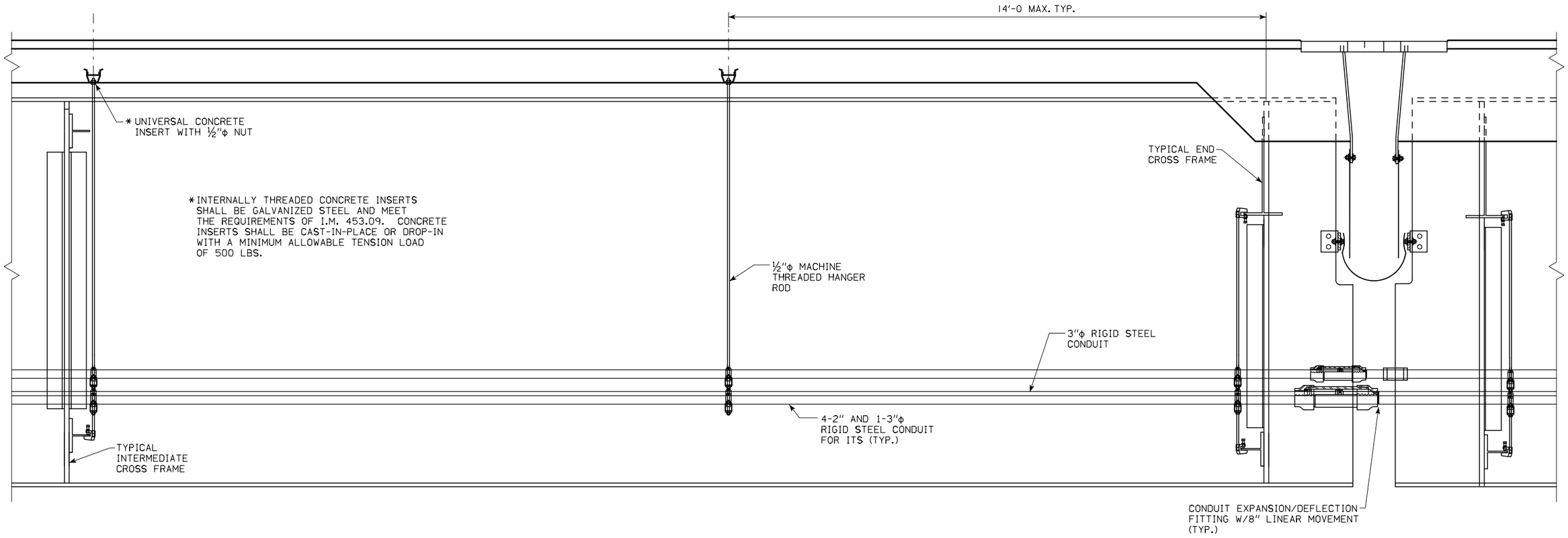

LONGITUDINAL CONDUIT DETAIL

(ITS AND ARCH ELECTRICAL FEED SHOWN)

LIGHTING DETAILS

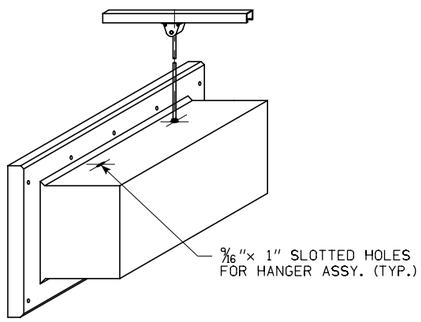

MOUNTING BRACKET
ISOMETRIC VIEW

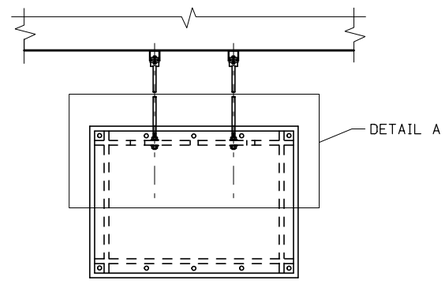

JUNCTION BOX
FRONT ELEVATION

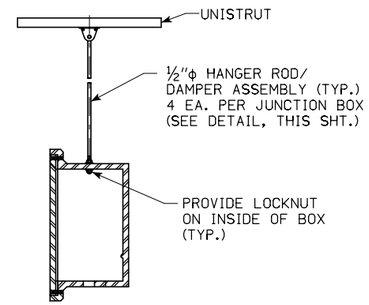

JUNCTION BOX
SIDE ELEVATION

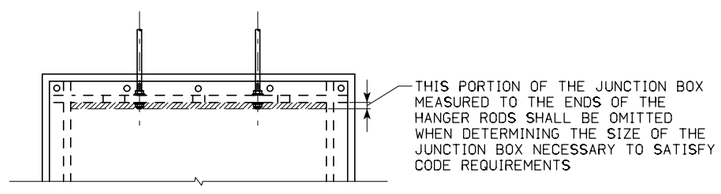

DETAIL A

CONDUIT NOTES:

1. SEE LI-104 STANDARD ROAD PLAN FOR ADDITIONAL INFORMATION ON JUNCTION BOXES.
2. CONSTRUCTION SHALL CONFORM TO THE CURRENT IOWA D.O.T. STANDARD AND SUPPLEMENTAL SPECIFICATIONS AND SPECIAL PROVISIONS.
3. CONDUIT INSTALLATION SHALL BE IN ACCORDANCE WITH ARTICLE 2523.03, N, OF THE STANDARD SPECIFICATIONS.
4. ALL ENTRANCE HOLES IN JUNCTION BOXES SHALL BE DRILLED AND TAPPED FOR THE SPECIFIED CONDUIT SIZE. CONDUIT ENDS SHALL NOT PROTRUDE INTO JUNCTION BOX MORE THAN ¼. DRAIN PIPE END SHALL BE FLUSH WITH INSIDE SURFACE OF BOX. GROUNDING BUTTONS SHALL BE LOCATED APPROXIMATELY 3" FROM THE INSIDE SURFACE OF THE BOX WALL, AND NOT CLOSER THAN 3" TO THE EDGE OF ANY HOLE IN THE BOX FLOOR. HOLES FOR DRAIN PIPE SHALL BE PLACED IN THE LOW CORNER OF THE BOX, WITH A MINIMUM CLEARANCE OF 1" BETWEEN THE EDGE OF THE HOLE AND THE INSIDE SURFACE OF THE BOX WALL. TYPICAL DETAILS ARE SHOWN ON THIS SHEET.
5. ALL COMPONENTS OF CONDUIT SYSTEM SHALL BE GALVANIZED UNLESS NOTED OTHERWISE.
6. NOT USED.
7. SUBMIT INSTALLATION INSTRUCTIONS. SUBMIT MANUFACTURER'S CATALOG CUTS, PRODUCT SPECIFICATIONS, AND TECHNICAL PRODUCT DATA, INCLUDING INSTALLATION INSTRUCTIONS.
8. PRODUCTS SHALL COMPLY WITH THE SPECIFIED REQUIREMENTS AND SHALL PROVIDE A QUALITY NO LESS THAN THAT OF THE MANUFACTURER'S STANDARD PRODUCTS, AS SPECIFIED BY THEIR PUBLISHED PRODUCT DATA. OFF-THE-SHELF CONDITIONS SHOULD NOT BE ASSUMED TO COMPLY WITH SPECIFIED REQUIREMENTS. DO NOT PURCHASE ANY MATERIALS AND EQUIPMENT UNTIL THE REVIEW OF SUBMITTALS BY THE ENGINEER THAT MIGHT AFFECT PURCHASE.
9. EXCEPT AS OTHERWISE INDICATED, PROVIDE NEW PRODUCTS. ALL PRODUCTS SHALL BE FREE OF DEFECTS AND HARMFUL DETERIORATION.
10. BEFORE MAKING ANY INSTALLATION, MAKE NECESSARY AND PROPER ARRANGEMENT FOR CHANGES REQUIRED TO AVOID INTERFERENCE WITH OR IMPROPER EFFECT ON OPERATION OF OTHER SYSTEMS.
11. IF ANY WORK IS INSTALLED SO THAT PROJECT WORK THAT WILL BE INSTALLED LATER WILL NOT HAVE REQUIRED CLEARANCES OR WILL INTERFERE WITH FINISHED DESIGN, THE CONTRACTOR SHALL MAKE SUCH CHANGES IN THEIR WORK AS DIRECTED BY THE ENGINEER TO PERMIT THE PROPER INSTALLATION OF ALL WORK UNDER THE CONTRACT.

LIGHTING
DETAILS

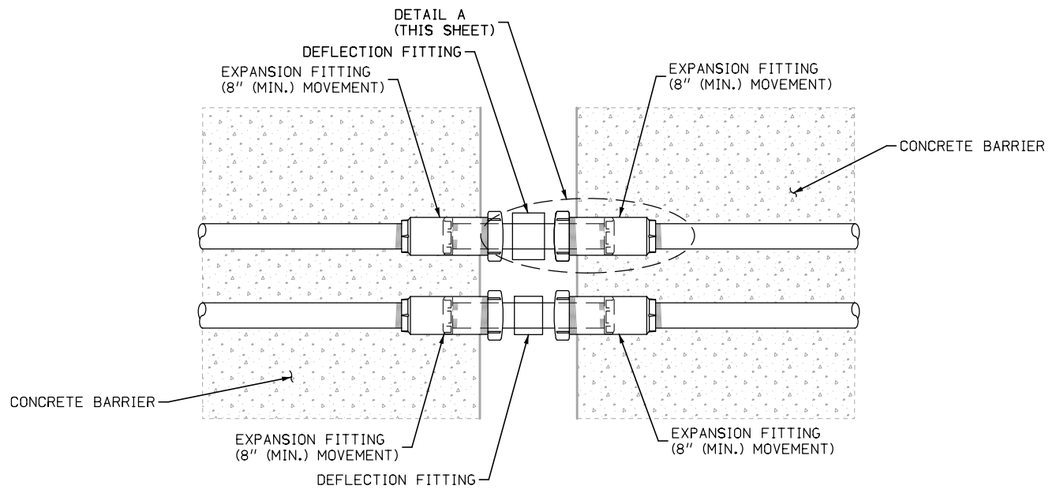

CONCRETE EMBEDDED EXPANSION FITTING DETAIL

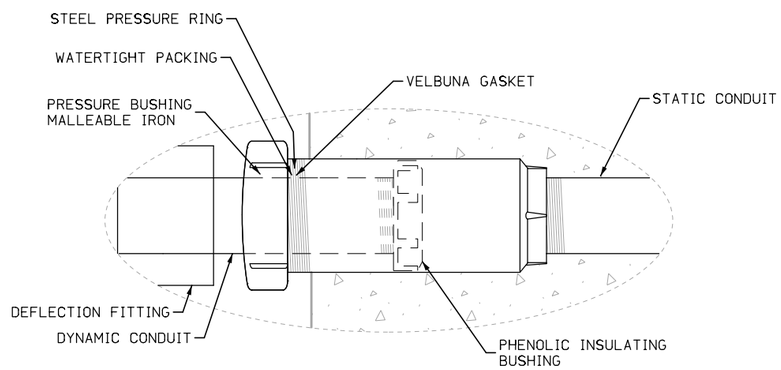

DETAIL A

LIGHTING DETAILS

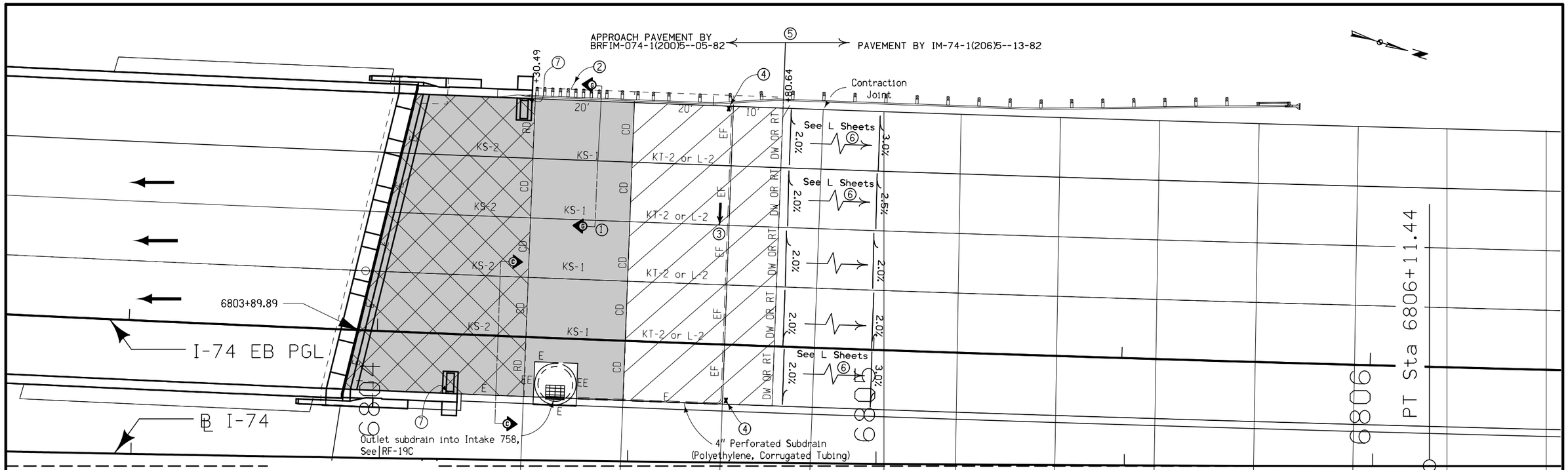

BRIDGE APPROACH SECTION

Refer to the RK-Series.

* Not a bid item

This Data Entry Sheet fills Tab 112-6 effective 10-21-08

Location		Approach Pavement						Subdrain							
Bridge Station	End	(T) Thickness	Pay Length	Non-Reinf. Pavement Area	Single-Reinf. Pavement Area	Double-Reinf. Pavement Area	Fixed or Movable Abutment	* Perforated Subdrain 4"	* Subdrain Outlet		* Porous Backfill	Class 'A'* Crushed Stone Backfill	* Modified Subbase	* Polymer Grid	Remarks
		Inches	FT	SY	SY	SY	F or M	LF	STA	Side	CY	CY	TON	SY	
6803+89.89	North	12	83.9	200	126.8	201.1	F	92	6804+35	RT	2.54	0	473	551	BARRIER INTAKE, SW-548, TOP ONLY deducted
															from pavement area.
															See IM-74-1(206)5--13-82 for Intake
															Schedule
															"Pay Length" measured along PGL

Contract Item:
Bridge Approach Pavement, As Per Plan

Pay Limits for contract item include the following areas:

- Double Reinforced Section
- Single Reinforced Section
- Non-Reinforced Section

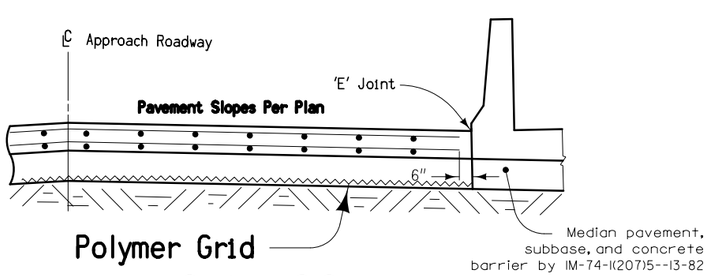

Section C-C

Pay Limits for contract item include the above areas unless otherwise noted.

1. See Modified RK-20.
2. Polymer grid and excavation limits of Modified Subbase 2' outside of pavement edge. See RK-20
3. Slope Subdrain to Drain
4. An "X" shall be placed in the plastic concrete near the 'EF' joint at the outside edge of pavement.
5. If abutting pavement is not in place when bridge approach pavement is constructed, follow procedure on Standard RK-30
6. Pavement cross slope transitions in Contract IM-74-1(206)5--13-82
7. Include 2 inch thick preformed joint material above counterfort brace to prevent settlement of approach onto counterfort.

MODIFIED STANDARD ROAD PLAN

REVISION	
7	04-19-11

RK-23

SHEET 1 of 1

MODIFICATIONS: Changed to represent EB I-74 bridge approach

EASTBOUND I-74 BRIDGE APPROACH (ABUTTING PCC OR COMPOSITE PAVEMENT)

ENGLISH	IOWA DOT	DESIGN TEAM BENESCH	SCOTT COUNTY	PROJECT NUMBER BRFIM-074-1(200)5--05-82	SHEET NUMBER U.1

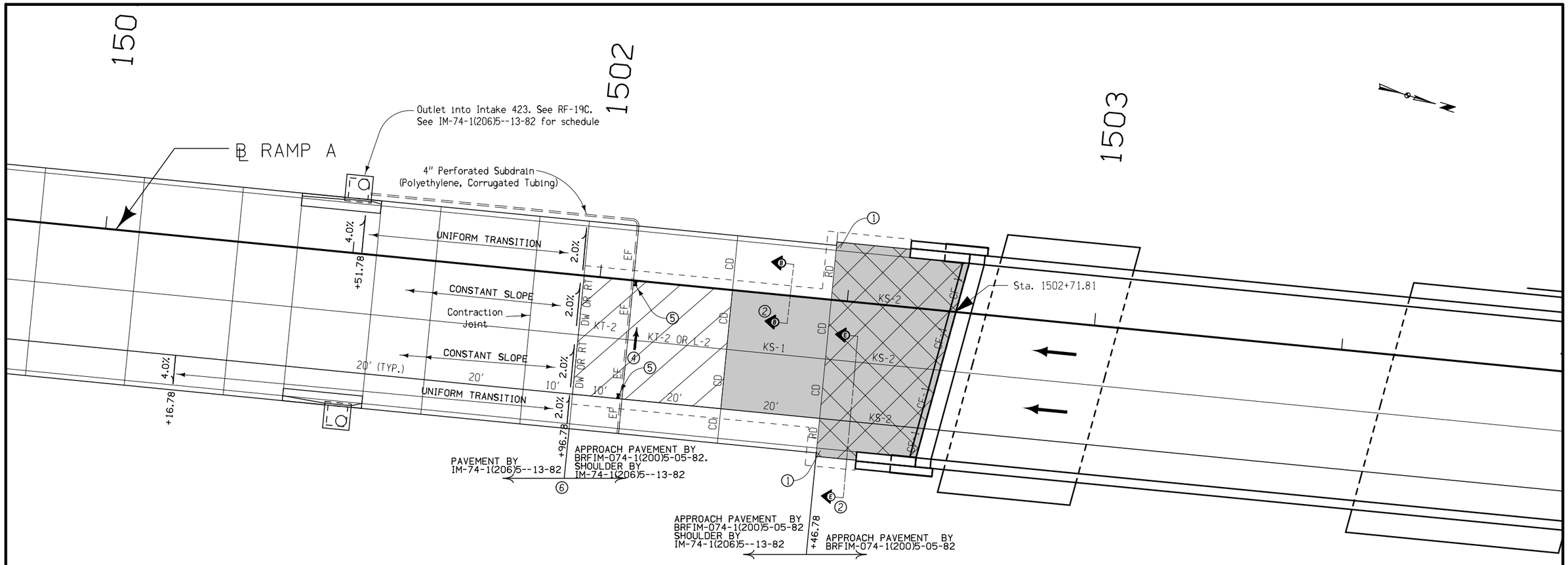

Contract Item:
Bridge Approach Pavement, As Per Plan

Pay Limits for contract item include the following areas:

- Double Reinforced Section
- Single Reinforced Section
- Non-Reinforced Section

BRIDGE APPROACH SECTION

Refer to the RK-Series.

* Not a bid item

This Data Entry Sheet fills Tab 112-6 effective 10-21-08

Location		Approach Pavement					Fixed or Movable Abutment	Subdrain							Remarks
Bridge Station	End	(T) Thickness	Pay Length	Non-Reinf. Pavement Area	Single-Reinf. Pavement Area	Double-Reinf. Pavement Area		* Perforated Subdrain 4"	* Subdrain Outlet		* Porous Backfill	Class 'A'* Crushed Stone Backfill	* Modified Subbase	* Polymer Grid	
		Inches	FT	SY	SY	SY	F or M	LF	STA	Side	CY	CY	TON	SY	
1502+71.81	South	12	75.1	80	53.3	108	M	96.7	1501+50	LT	2.67	0	252.9	277.69	"Pay Length" measured along Baseline

1. Build Modified 6 inch Sloped Curb to end of Double Reinforced Section. See Detail G on Modified Standard Road Plan RK-20
2. See Modified Standard Road Plan RK-20
3. Polymer grid and excavation limits of Modified Subbase 2' outside of pavement edge. See Modified Standard Road Plan RK-20
4. Slope Subdrain to Drain
5. An "X" shall be placed in the plastic concrete near the 'EF' joint at the outside edge of pavement.
6. If abutting pavement is not in place when bridge approach pavement is constructed, follow procedure on Standard RK-30

MODIFIED STANDARD ROAD PLAN

REVISION 7 04-19-11

RK-21

SHEET 1 of 1

MODIFICATIONS: Changed to represent Ramp A south bridge approach

RAMP A BRIDGE APPROACH (ABUTTING PCC OR COMPOSITE PAVEMENT)

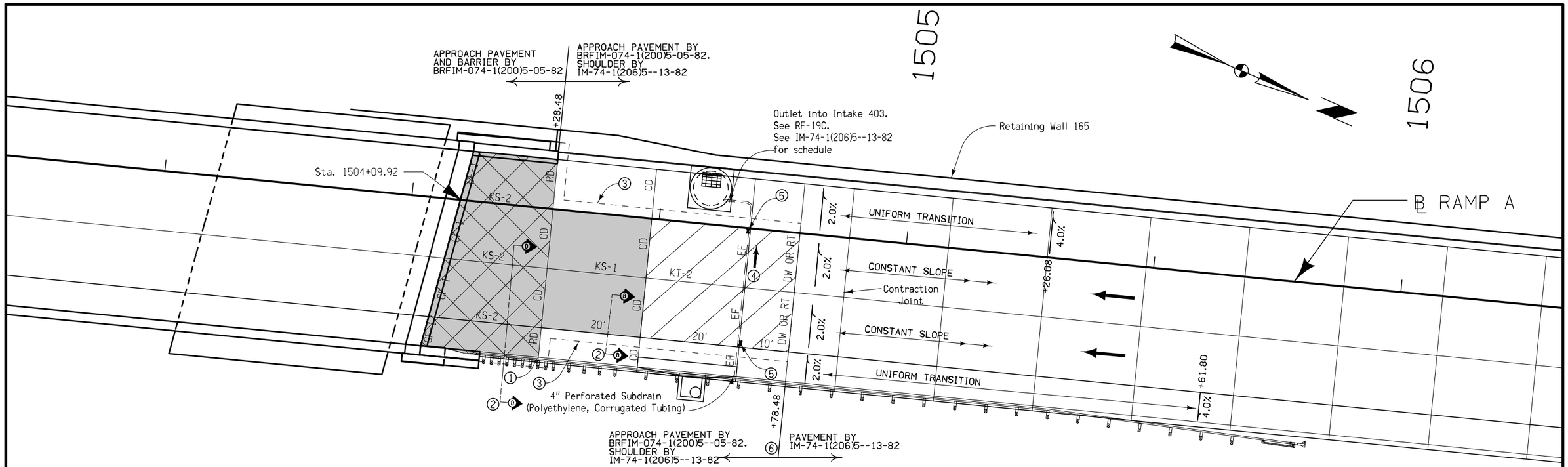

BRIDGE APPROACH SECTION

Refer to the RK-Series.

* Not a bid item

This Data Entry Sheet fills Tab 112-6 effective 10-21-08

Location		Approach Pavement						Subdrain							
Bridge Station	End	(T) Thickness	Pay Length	Non-Reinf. Pavement Area	Single-Reinf. Pavement Area	Double-Reinf. Pavement Area	Fixed or Movable Abutment	* Perforated Subdrain 4"	* Subdrain Outlet		* Porous Backfill	Class 'A'* Crushed Stone Backfill	* Modified Subbase	* Polymer Grid	Remarks
		Inches	FT	SY	SY	SY	F or M	LF	STA	Side	CY	CY	TON	SY	
1504+09.92	North	12	68.6	80	53.3	92	M	41.34	1504+62.38	LT	1.14	0	229.5	262.1	"Pay Length" measured along Baseline

Contract Item:
Bridge Approach Pavement, As Per Plan

Pay Limits for contract item include the following areas:

- Double Reinforced Section
- Single Reinforced Section
- Non-Reinforced Section

1. Build 4 inch Sloped Curb to end of Double Reinforced Section
2. See Modified Standard Road Plan RK-20
3. Polymer grid and excavation limits of Modified Subbase 2' outside of pavement edge. See Modified Standard Road Plan RK-20
4. Slope Subdrain to Drain
5. An "X" shall be placed in the plastic concrete near the 'EF' joint at the outside edge of pavement.
6. If abutting pavement is not in place when bridge approach pavement is constructed, follow procedure on Standard RK-30

MODIFIED STANDARD ROAD PLAN

REVISION 7 04-19-11

RK-21

SHEET 1 of 1

MODIFICATIONS: Changed to represent Ramp A north bridge approach

RAMP A BRIDGE APPROACH (ABUTTING PCC OR COMPOSITE PAVEMENT)

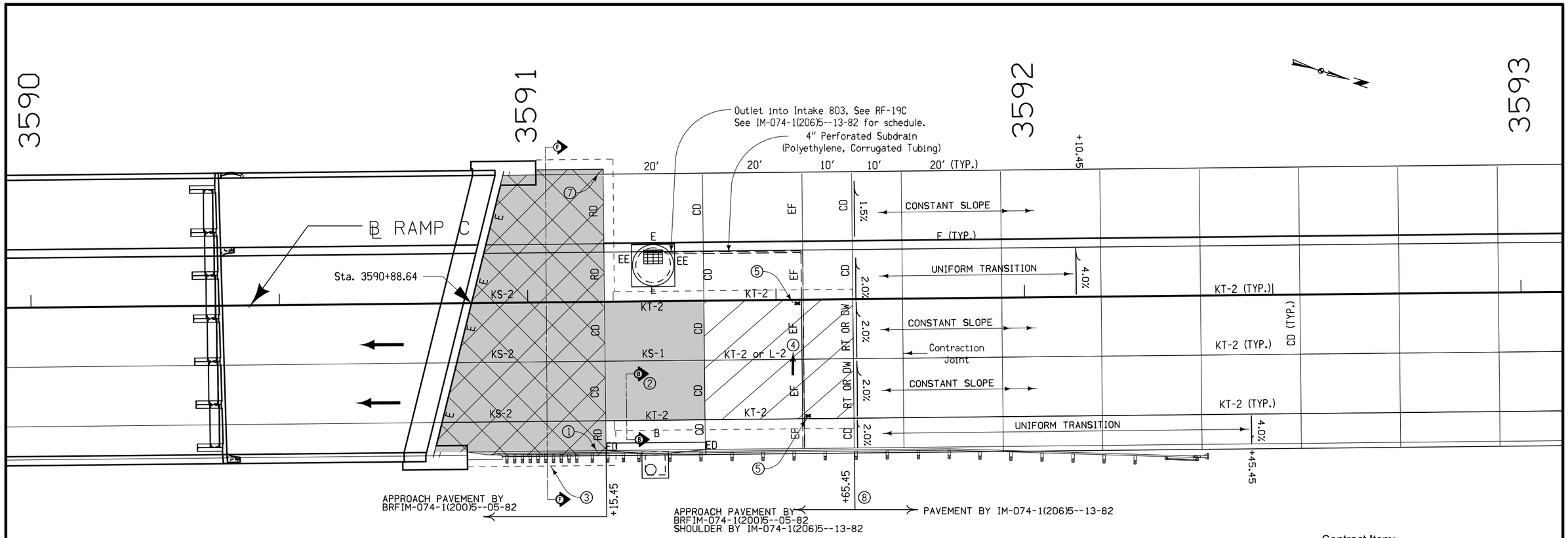

Contract Item:
Bridge Approach Pavement, As Per Plan

Pay Limits for contract item include the following areas:

- Double Reinforced Section
- Single Reinforced Section
- Non-Reinforced Section

BRIDGE APPROACH SECTION

Refer to the RK-Series.

* Not a bid item

This Data Entry Sheet fills Tab 112-6 effective 10-21-08

Location		Approach Pavement						Subdrain							
Bridge Station	End	(T) Thickness	Pay Length	Non-Reinf. Pavement Area	Single-Reinf. Pavement Area	Double-Reinf. Pavement Area	Fixed or Movable Abutment	* Perforated Subdrain 4"	* Subdrain Outlet		* Porous Backfill	Class 'A'* Crushed Stone Backfill	* Modified Subbase	* Polymer Grid	Remarks
		Inches	FT	SY	SY	SY	F or M	LF	STA	Side	CY	CY	TON	SY	
3590+88.64	North	12	76.8	80	53.3	173.5	F	67	3591+25.33	LT	1.85	0	329	359	"Pay Length" measured along Baseline

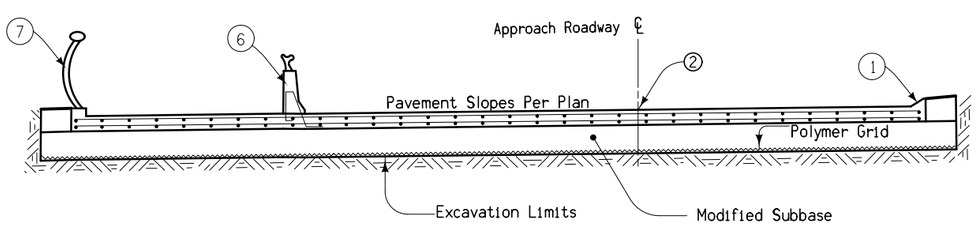

Section F-F

Pay Limits for contract item include the above areas unless otherwise noted.

1. Build 4 inch Sloped Curb to end of Double Reinforced Section
2. See Standard Road Plan RK-20
3. Polymer grid and excavation limits of Modified Subbase 2' outside of pavement edge. See RK-20
4. Slope Subdrain to Drain
5. An "X" shall be placed in the plastic concrete near the 'EF' joint at the outside edge of pavement.
6. See Modified Standard Road Plan BA-104. Include 5g2 bars from Modified Standard BA-106 for Barrier Construct Modified BA-104 and railing to end of double reinforced section.
7. Construct to end of double reinforced section.
8. If abutting pavement is not in place when bridge approach pavement is constructed, follow procedure on Standard RK-30

MODIFIED STANDARD ROAD PLAN

REVISION	
7	04-19-11

RK-21

SHEET 1 of 1

MODIFICATIONS: Changed to represent Ramp C bridge approach

RAMP C BRIDGE APPROACH (ABUTTING PCC OR COMPOSITE PAVEMENT)

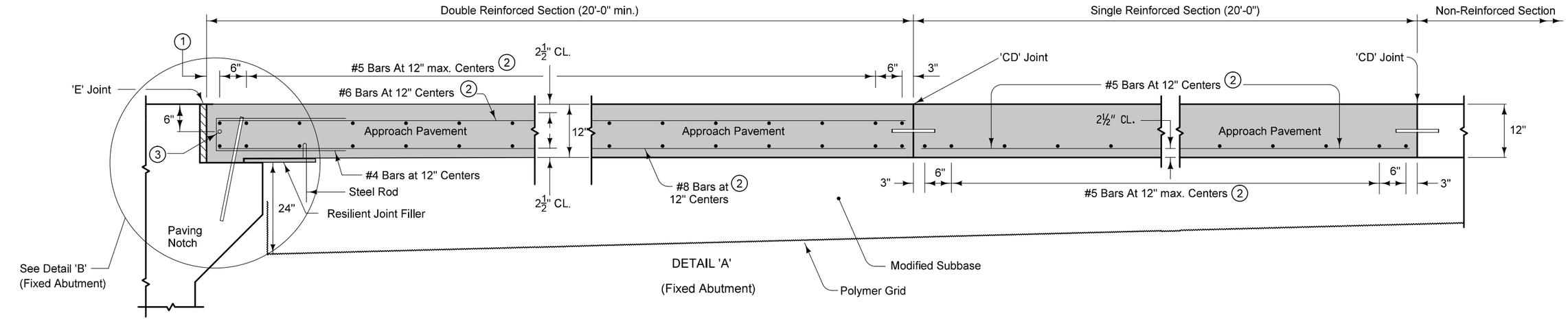

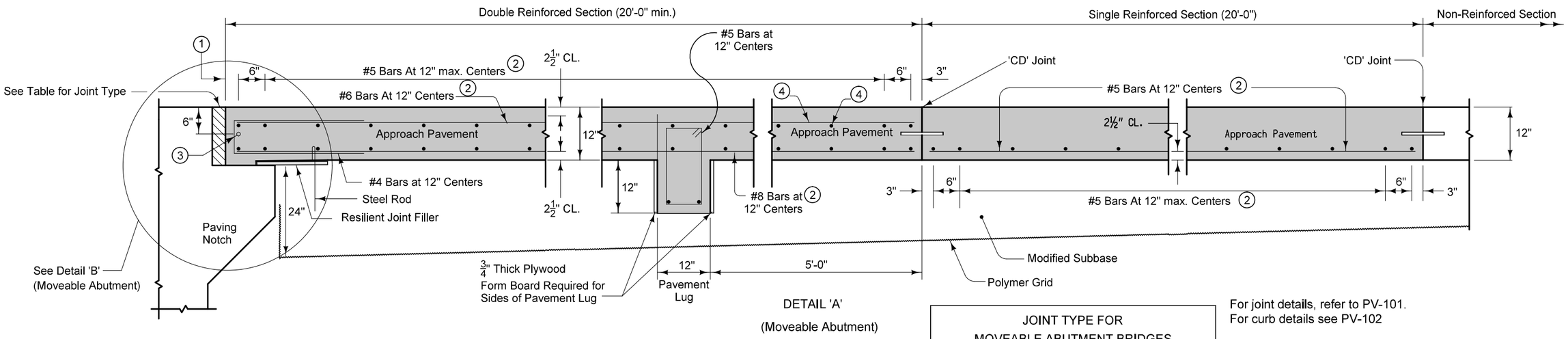

For joint details, refer to PV-101.
For curb details see PV-102

All transverse bars are #5.

Possible Contract Item:

Bridge Approach Pavement, As per Plan

Possible Tabulation: 112-6

JOINT TYPE FOR MOVEABLE ABUTMENT BRIDGES		
Joint	Maximum Bridge Length	
	Concrete Beam or Slab	Steel Girder
CF-1	370'	250'
CF-2	465'	320'
CF-3	575'	400'

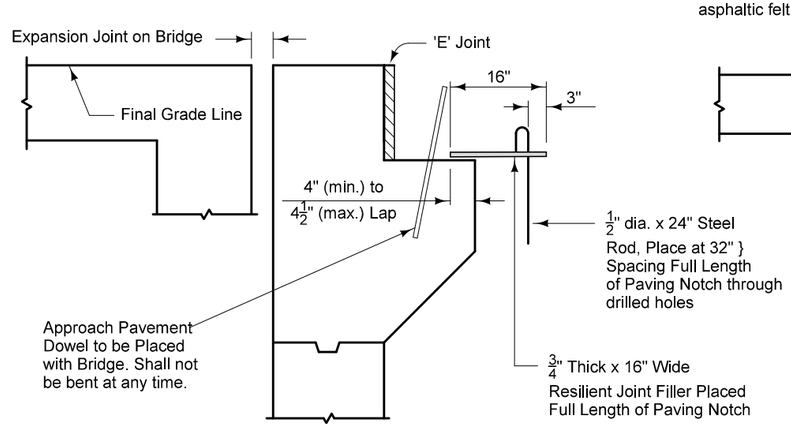

DETAIL 'B' (Fixed Abutment)

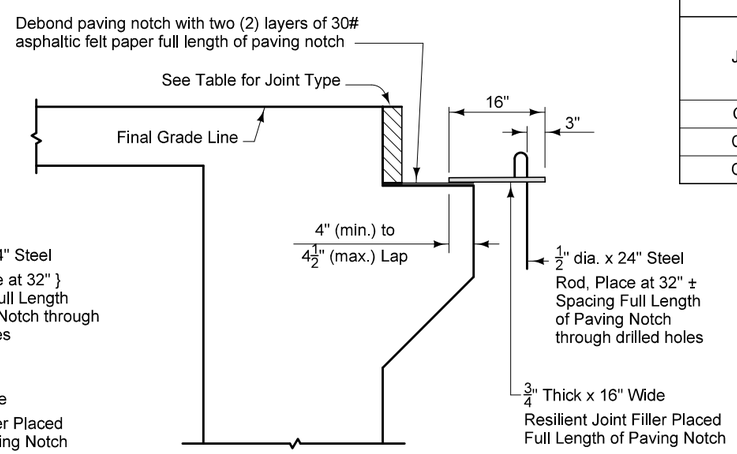

DETAIL 'B' (Moveable Abutment)

1. 2" min. to 2 1/2" max. clear to bent bar.
2. Minimum lap length: #5 Bars - 18"
   #6 Bars - 27"
   #8 Bars - 48"
3. If bridge is skewed, place additional #5 bar parallel to skewed face.
4. Place additional 6'-10" long #5 bars in right shoulder of Ramp D from end of double reinforced section to Sta. 4201+72.09. Space evenly between #5 bars.

MODIFIED

STANDARD ROAD PLAN

REVISION	
9	04-17-12

RK-20

SHEET 1 of 4

MODIFICATIONS: Changed Details to match I-74 and US 67 Ramp Bridges

DOUBLE REINFORCED 12" APPROACH

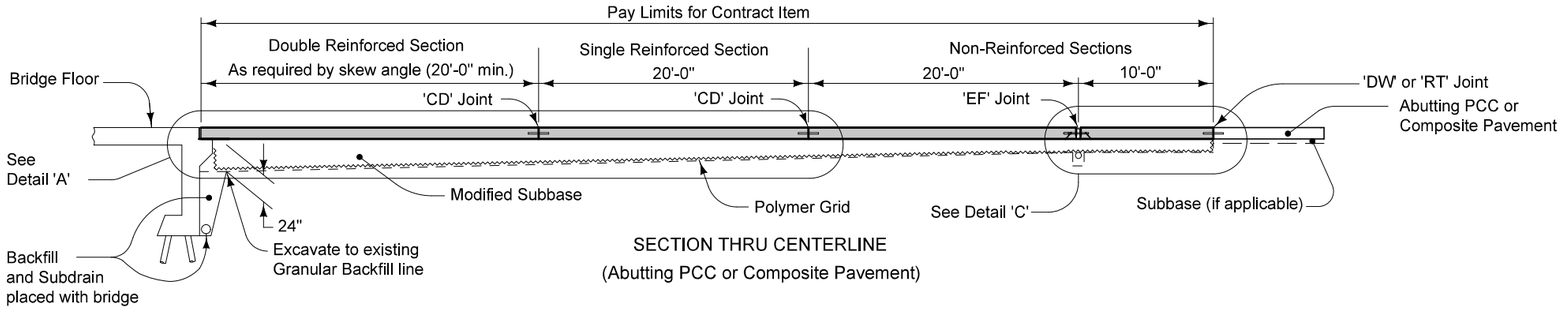

SECTION THRU CENTERLINE
(Abutting PCC or Composite Pavement)

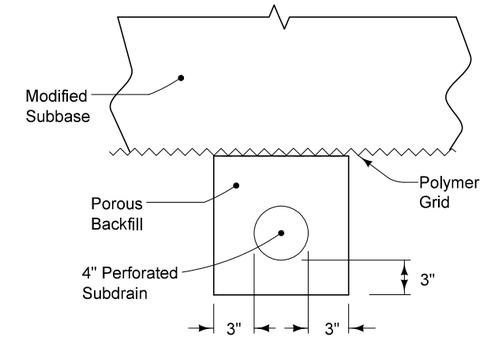

4" SUBDRAIN LOCATION

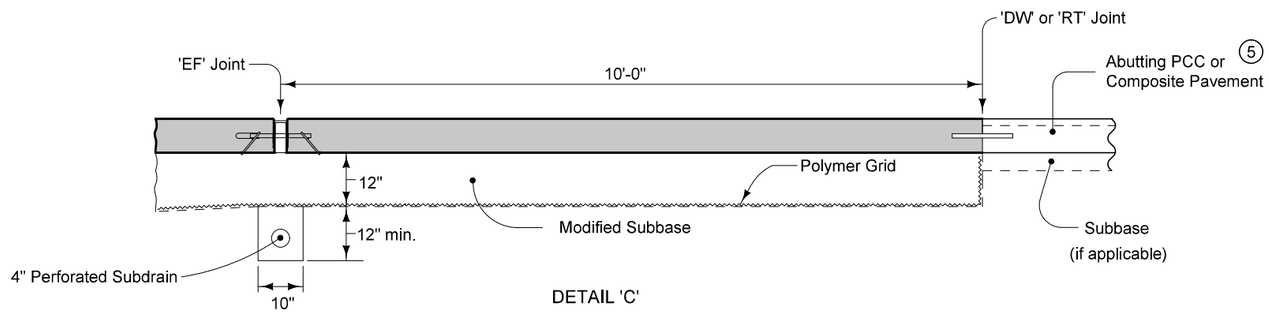

DETAIL 'C'
(Doweled PCC Pavement)

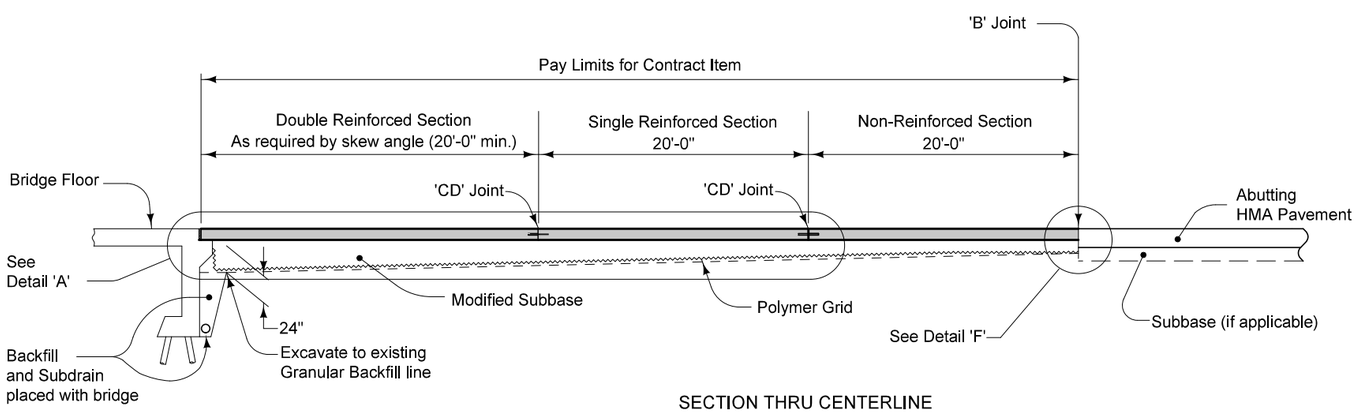

SECTION THRU CENTERLINE
(Abutting HMA Pavement)

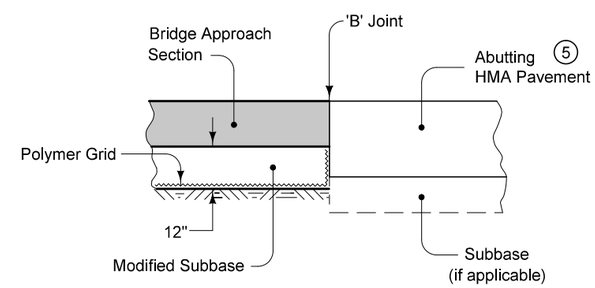

DETAIL 'F'

5 If abutting pavement (PCC or HMA) is not in place, refer to RK-30.

MODIFIED
STANDARD ROAD PLAN

REVISION	
9	04-17-12

RK-20

SHEET 2 of 4

MODIFICATIONS: Changed Details to match I-74 and US 67 Ramp bridges.

DOUBLE REINFORCED 12" APPROACH

ENGLISH	IOWA DOT	DESIGN TEAM BENESCH	SCOTT COUNTY	PROJECT NUMBER BRFIM-074-1(200)5--05-82	SHEET NUMBER U.6

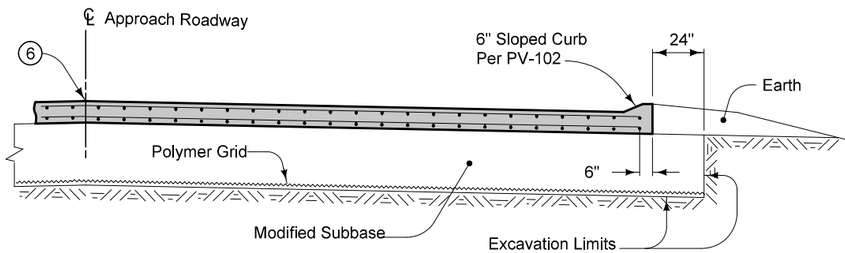

SECTION A-A

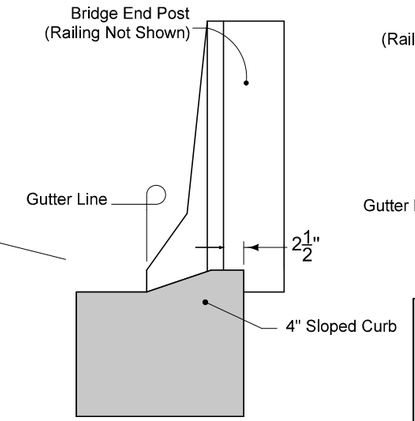

DETAIL 'I'
(Back of Curb Placement)

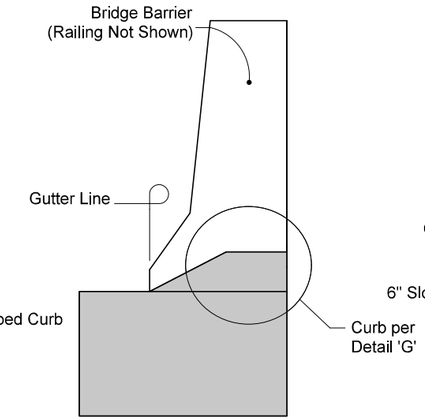

DETAIL 'E'
(Back of Curb Placement)

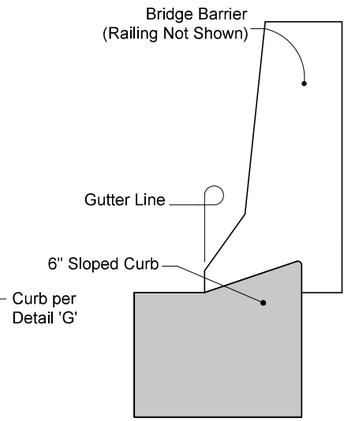

DETAIL 'M'
(Back of Curb Placement)

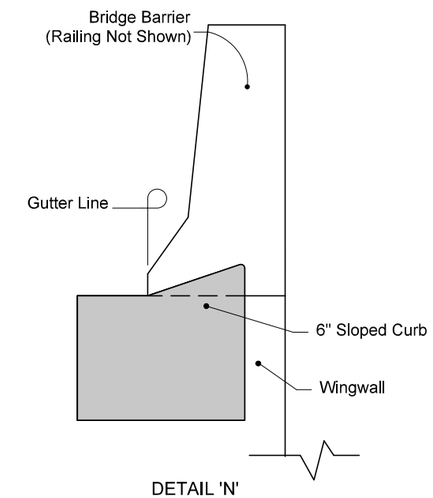

DETAIL 'N'
(Back of Curb Placement)

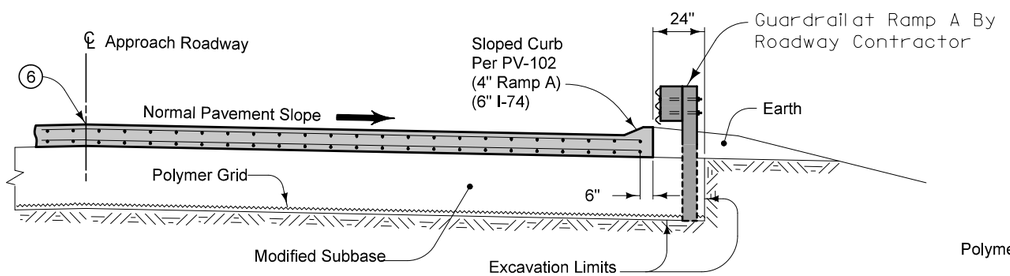

SECTION D-D

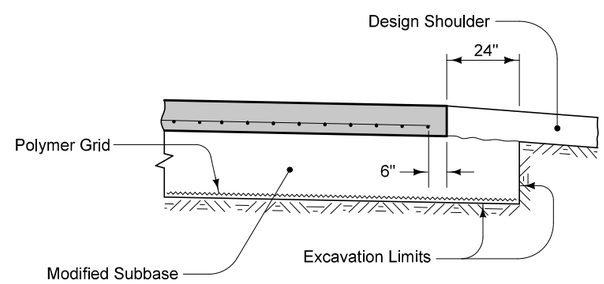

SECTION B-B

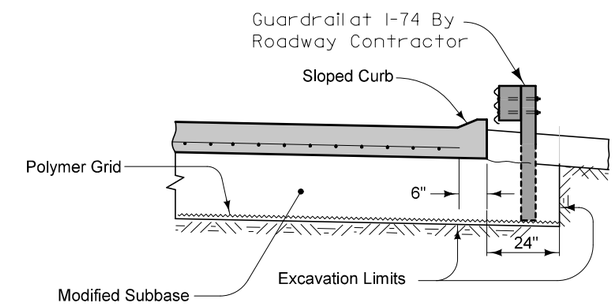

SECTION G-G

6 Longitudinal Joint: (PV-101)
Single pour - Saw cut joint per Detail B.
Two pours - Use 'KS-2' Joint

7 Design shoulder width.

8 Reinforced bridge approach section.

9 Limit of Wingwall
Barrier overlaps on Approach Pavement

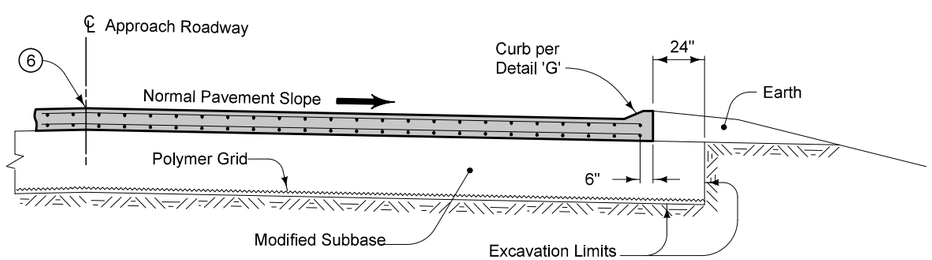

SECTION E-E

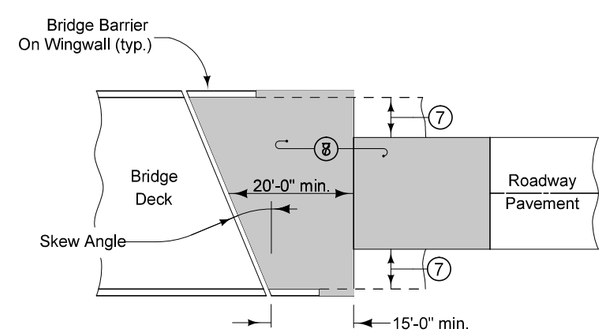

APPROACH PAVEMENT
LAYOUT AT A SKEW

MODIFIED
STANDARD ROAD PLAN

REVISION	
9	04-17-12

RK-20

SHEET 3 of 4

MODIFICATIONS: Changed details to match I-74 and US 67 Ramp bridges.

DOUBLE REINFORCED 12" APPROACH

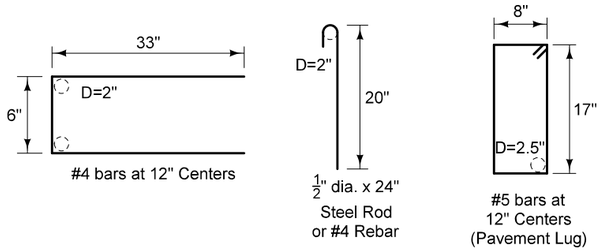

BENT BAR SHAPES

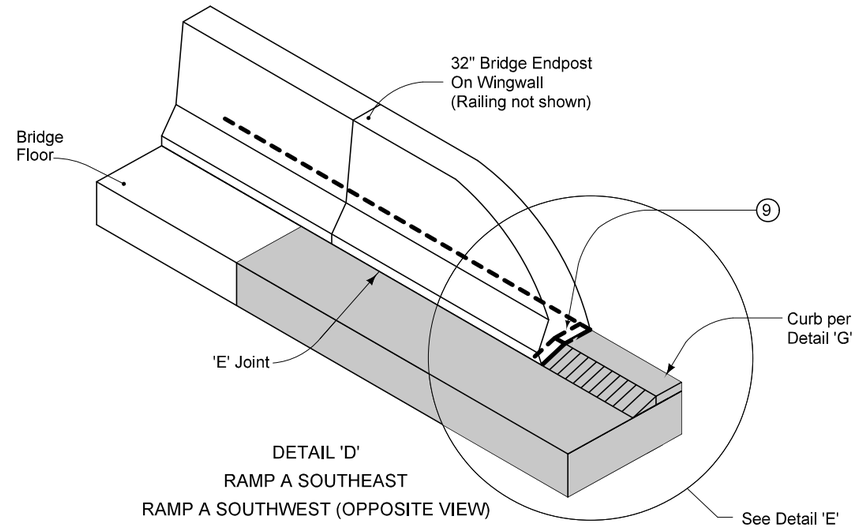

DETAIL 'D'
RAMP A SOUTHEAST
RAMP A SOUTHWEST (OPPOSITE VIEW)

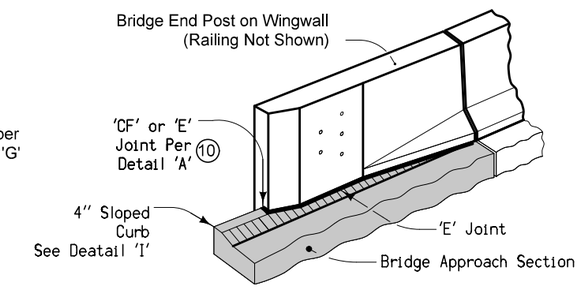

DETAIL 'H'
RAMP A NORTHEAST
RAMP C NORTHEAST
RAMP D SOUTHWEST
WB I-74 NORTHEAST
EB I-74 NORTHWEST
(Joint Placement)

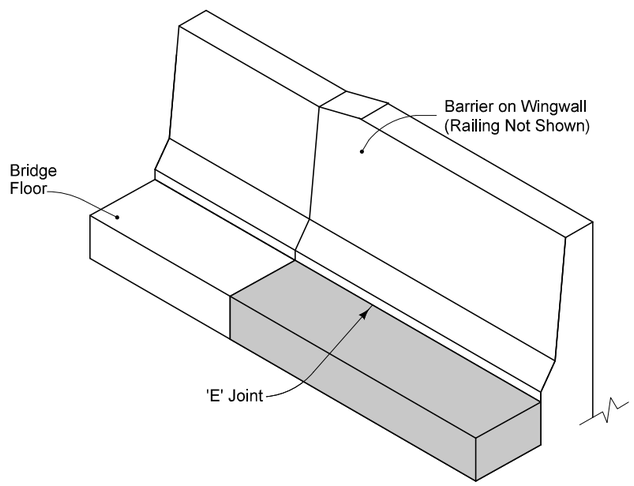

DETAIL 'J'
RAMP A NORTHWEST
(Joint Placement)

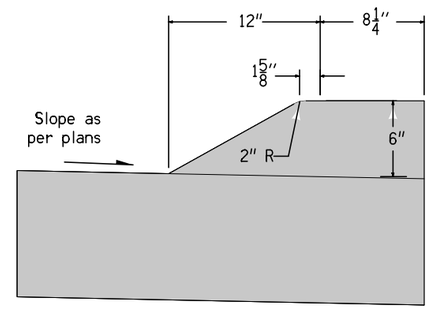

DETAIL 'G'
MODIFIED 6" SLOPED CURB
RAMP A SOUTH

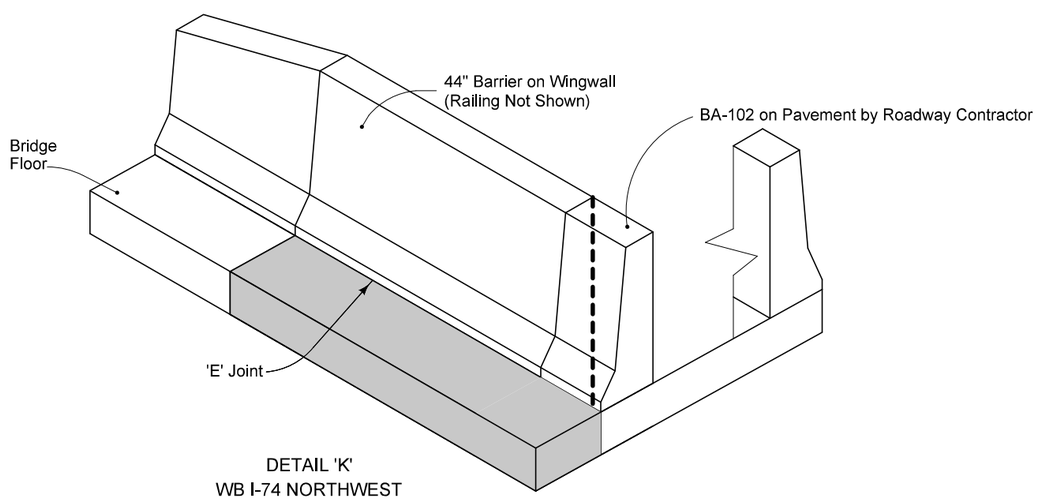

DETAIL 'K'
WB I-74 NORTHWEST
EB I-74 NORTHEAST (OPPOSITE VIEW)
(Joint Placement)

6 Longitudinal Joint: (PV-101)
Single pour - Saw cut joint per Detail B.
Two pours - Use 'KS-2' Joint

7 Design shoulder width.

8 Reinforced bridge approach section.

9 Limit of Wingwall
Barrier overlaps on Approach Pavement

10 Expansion joint at end of bridge end post: Place joint filler the full depth of the bridge approach pavement. In areas with curb, place full depth of pavement plus curb and shape material to fit the shape of the curb per Section B-B of PV-101. Seal joint per Detail F of PV-101.

- Fixed Abutment Bridges: Type 'E' Joint

- Moveable Abutment Bridges: Flexible Foam Expansion Joint Filler in accordance with Specification Section 4136. Minimum filler width is the abutment 'CF' joint width. Joint length as required to completely fill from back side of curb to front face of bridge wing.

MODIFIED
STANDARD ROAD PLAN

REVISION	
9	04-17-12

RK-20
SHEET 4 of 4

MODIFICATIONS: Changed details to match I-74 and US 67 Ramp bridges.

DOUBLE REINFORCED 12" APPROACH

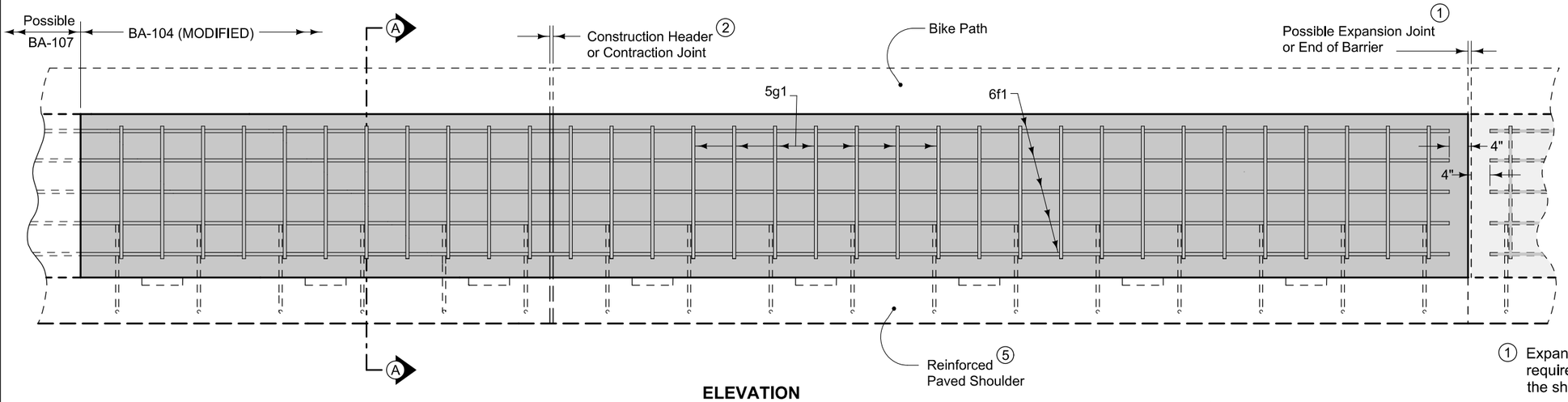

ELEVATION

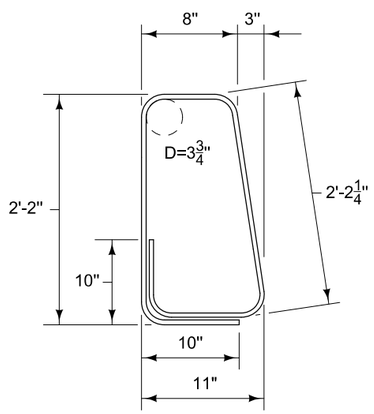

5g1
BENT BAR

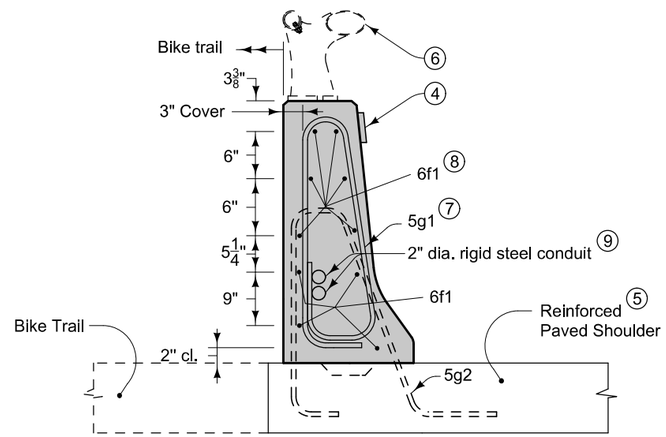

SECTION A-A
(Steel rail not shown.)

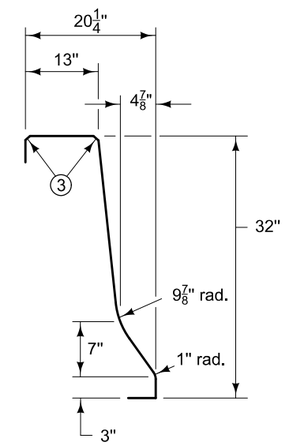

BARRIER FACE

1. Expansion joints are necessary only where specifically required by project plans. Conform expansion material to the shape of the barrier. No sealer is required.
2. Where abutting sections are placed as separate pours, a butt joint may be used. Extend longitudinal reinforcement into the abutting section a minimum of 1'-6". Contraction joint locations shall match pavement joint locations.
3. Fillet all exposed corners with a $\frac{3}{4}$ inch dressed and beveled strip.
4. Place barrier markers at 100 foot increments in areas with non-continuous lighting, or 250 foot increments in areas with continuous lighting. Marker color to be the same as adjacent edge line.
5. Refer to BA-106 (MODIFIED) for details of 5g2 bars and reinforced paved shoulder.
6. Refer to "STEEL SEPARATION RAILING DETAILS".
7. On the non-traffic side of the barrier railing, place the 5g1 bars with a 3" clearance and the 5g2 bars with a $1\frac{1}{2}$" clearance to provide adequate space between the steel conduit and the stainless steel 5g2 bars to meet the requirements of I.M. 451.02.
8. Note that some of the 6f1 bars are to be placed outside of the 5g1 bars, between the 5g1 bars and the 5g2 bars, as shown in Section A-A.
9. The steel conduit shall be securely tied at every 3'-0" intersection with the 5g1 bars to avoid contact with the stainless steel 5g2 bars.

ESTIMATED QUANTITIES FOR BARRIER Per Linear Foot	
Concrete - Cu. Yds.	0.13
Reinforcing Steel - Lbs.	30.4

REINFORCING BAR LIST Per Section (Approximately 20')			
Bar	Number of Bars	Length	Spacing
5g1	40	7'-$7\frac{1}{4}$"	0'-6"
6f1	10	19'-4"	—

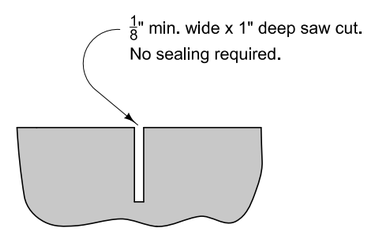

SAWED CONTRACTION JOINT

Saw cut top and front face. Saw cut back if exposed.

Use Grade 60 epoxy-coated reinforcing bars. Provide 2 inches minimum cover, unless noted otherwise. Anchor all reinforcement to prevent movement. Secure each section at the front, back, and at 3'-6" intervals using a method approved by the Engineer.

Possible Contract Item:
Concrete Barrier, BA-104 (MODIFIED)

Possible Tabulation:
108-18B

MODIFIED STANDARD ROAD PLAN

REVISION	
New	04-20-10

BA-104

SHEET 1 of 1

MODIFICATIONS: Changed size and shape of concrete barrier and reinforcement.

32" CONCRETE BARRIER FOR USE WITH REINFORCED PAVED SHOULDER

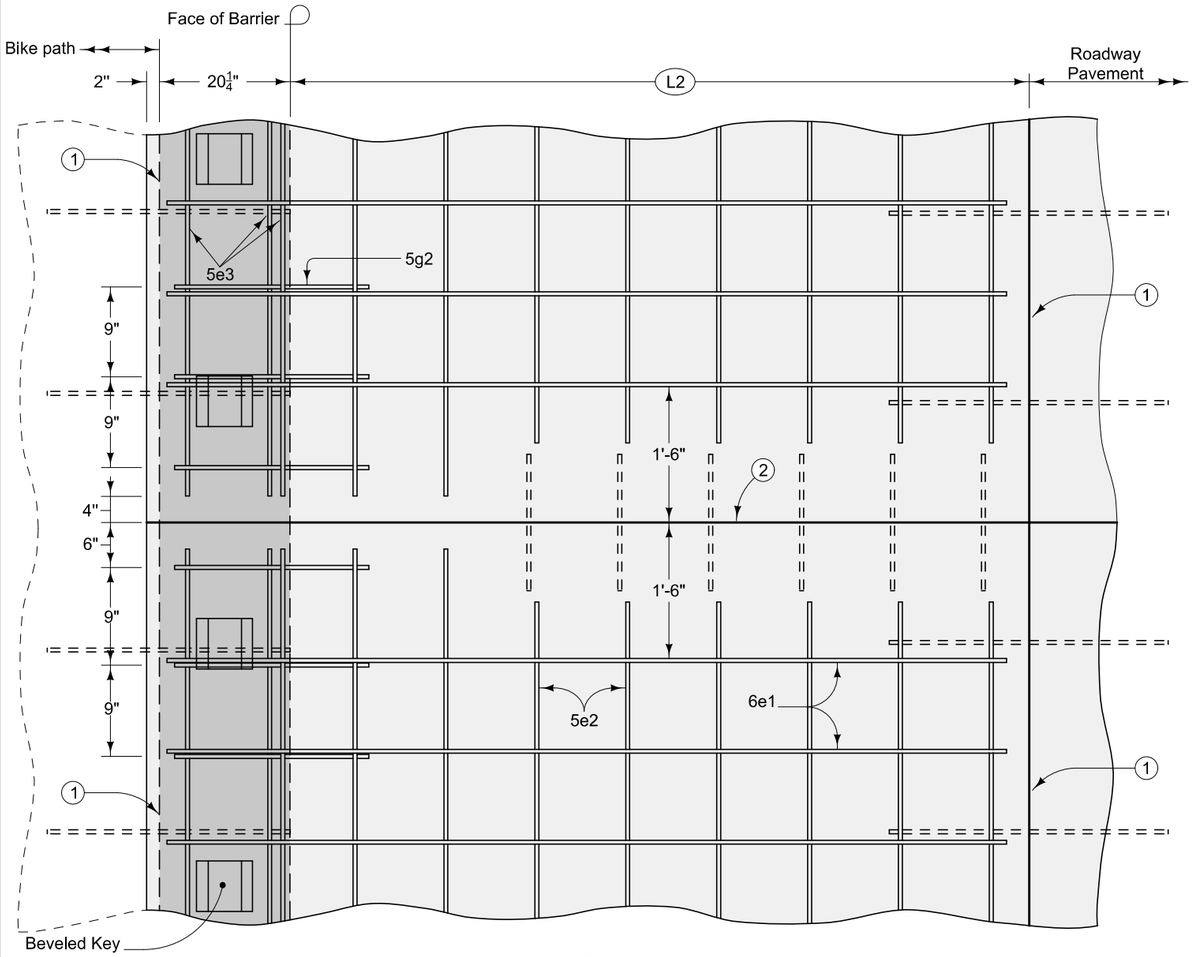

PLAN

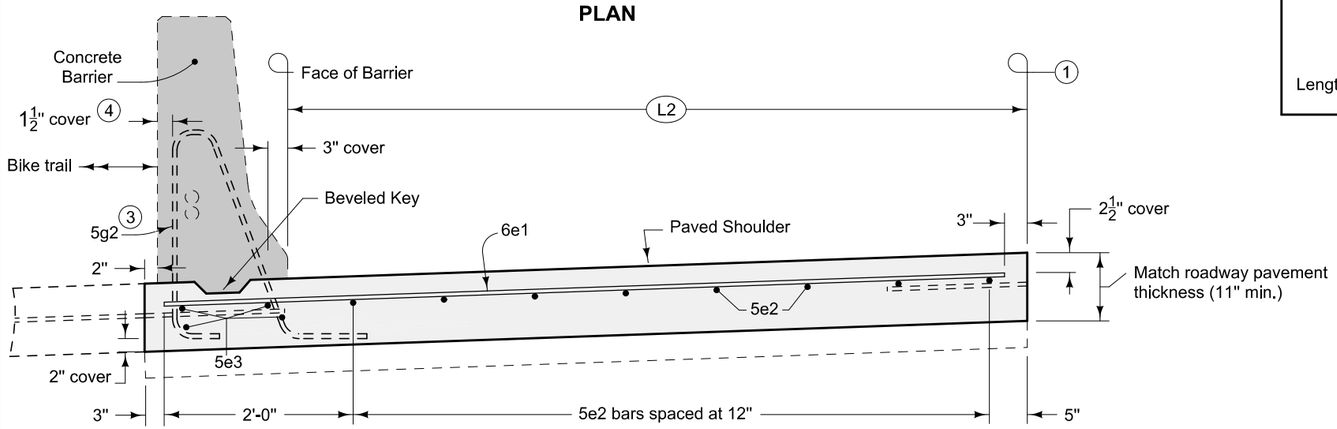

TYPICAL SECTION

REINFORCING BAR LIST Per Shoulder Panel (Approximately 20 Linear Feet)				
L2	Bar	Number of Bars	Length	Spacing
10'	6e1	25	11'-1"	9"
	5e2	10	18'-0"	12"
Applies to all Shoulder Widths	5e3	4	18'-8"	See Drawing
	5g2 (3)	20	6'-11"	1'-0"

ESTIMATED SHOULDER QUANTITIES Per Linear Foot					
	L2				
	4'	6'	8'	10'	12'
Concrete Sq. Yds.	0.65	0.87	1.09	1.32	1.54

BENT BAR DETAILS

5g2 (Stainless Steel)

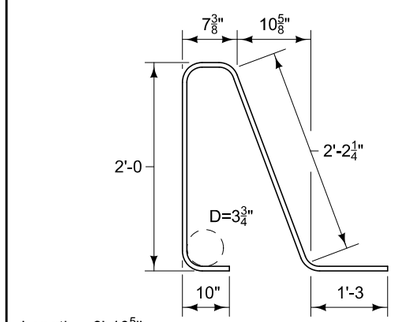

Length = $6'\text{-}10\frac{5}{8}$"

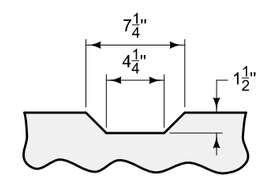

BEVELED KEY

Use 2 x 8 lumber 8" long to make keys.
Place keys at 2'-8" centers.

1. 'L-2' or 'KT-2' joint. See PV-101.
2. 'CD' joint. Match roadway joint locations. See **PV-101**. No 'CD' joint baskets required within 4' of outside edge of shoulder.
3. When shoulder will be located under a concrete barrier end section, replace 5g2 bars with reinforcement as shown on BA-107.
4. On the non-traffic side of the barrier railing, place the 5g1 bars, as specified on BA-104 modified, with a 3 inch clearance and the 5g2 bars with a $1\frac{1}{2}$ inch clearance to provide adequate space between the steel conduit and the stainless steel 5g2 bars to meet the requirements of I.M. 451.02.

Possible Contract Item:
Reinforced Paved Shoulder (MODIFIED)

Possible Tabulation:
108-18B

MODIFIED STANDARD ROAD PLAN

REVISION	
2	10-18-11

BA-106

SHEET 1 of 1

MODIFICATIONS: Changed concrete barrier width and changed 5g2 bar size and spacing and removed 5g3 bar for use with 32" barrier

Changed 6e1 bar spacing and added doweled roadway joint to connection to bike path behind barrier.

REINFORCED PAVED SHOULDER FOR CONCRETE BARRIER